AUTHENTICATED
U.S. GOVERNMENT
INFORMATION
GPO

FEDERAL REGISTER

Vol. 77 Thursday,
No. 129 July 5, 2012

Pages 39617–39894

OFFICE OF THE FEDERAL REGISTER

The **FEDERAL REGISTER** (ISSN 0097–6326) is published daily, Monday through Friday, except official holidays, by the Office of the Federal Register, National Archives and Records Administration, Washington, DC 20408, under the Federal Register Act (44 U.S.C. Ch. 15) and the regulations of the Administrative Committee of the Federal Register (1 CFR Ch. I). The Superintendent of Documents, U.S. Government Printing Office, Washington, DC 20402 is the exclusive distributor of the official edition. Periodicals postage is paid at Washington, DC.

The **FEDERAL REGISTER** provides a uniform system for making available to the public regulations and legal notices issued by Federal agencies. These include Presidential proclamations and Executive Orders, Federal agency documents having general applicability and legal effect, documents required to be published by act of Congress, and other Federal agency documents of public interest.

Documents are on file for public inspection in the Office of the Federal Register the day before they are published, unless the issuing agency requests earlier filing. For a list of documents currently on file for public inspection, see *www.ofr.gov.*

The seal of the National Archives and Records Administration authenticates the Federal Register as the official serial publication established under the Federal Register Act. Under 44 U.S.C. 1507, the contents of the **Federal Register** shall be judicially noticed.

The **Federal Register** is published in paper and on 24x microfiche. It is also available online at no charge at *www.fdsys.gov*, a service of the U.S. Government Printing Office.

The online edition of the **Federal Register** is issued under the authority of the Administrative Committee of the Federal Register as the official legal equivalent of the paper and microfiche editions (44 U.S.C. 4101 and 1 CFR 5.10). It is updated by 6:00 a.m. each day the **Federal Register** is published and includes both text and graphics from Volume 59, 1 (January 2, 1994) forward. For more information, contact the GPO Customer Contact Center, U.S. Government Printing Office. Phone 202-512-1800 or 866-512-1800 (toll free). E-mail, *gpo@custhelp.com.*

The annual subscription price for the **Federal Register** paper edition is $749 plus postage, or $808, plus postage, for a combined **Federal Register, Federal Register** Index and List of CFR Sections Affected (LSA) subscription; the microfiche edition of the **Federal Register** including the **Federal Register** Index and LSA is $165, plus postage. Six month subscriptions are available for one-half the annual rate. The prevailing postal rates will be applied to orders according to the delivery method requested. The price of a single copy of the daily **Federal Register,** including postage, is based on the number of pages: $11 for an issue containing less than 200 pages; $22 for an issue containing 200 to 400 pages; and $33 for an issue containing more than 400 pages. Single issues of the microfiche edition may be purchased for $3 per copy, including postage. Remit check or money order, made payable to the Superintendent of Documents, or charge to your GPO Deposit Account, VISA, MasterCard, American Express, or Discover. Mail to: U.S. Government Printing Office—New Orders, P.O. Box 979050, St. Louis, MO 63197-9000; or call toll free 1-866-512-1800, DC area 202-512-1800; or go to the U.S. Government Online Bookstore site, see *bookstore.gpo.gov.*

There are no restrictions on the republication of material appearing in the **Federal Register.**

How To Cite This Publication: Use the volume number and the page number. Example: 77 FR 12345.

Postmaster: Send address changes to the Superintendent of Documents, Federal Register, U.S. Government Printing Office, Washington, DC 20402, along with the entire mailing label from the last issue received.

SUBSCRIPTIONS AND COPIES

PUBLIC

Subscriptions:

Paper or fiche	**202–512–1800**
Assistance with public subscriptions	**202–512–1806**

General online information **202–512–1530; 1–888–293–6498**

Single copies/back copies:

Paper or fiche	**202–512–1800**
Assistance with public single copies	**1–866–512–1800 (Toll-Free)**

FEDERAL AGENCIES

Subscriptions:

Paper or fiche	**202–741–6005**
Assistance with Federal agency subscriptions	**202–741–6005**

FEDERAL REGISTER WORKSHOP

THE FEDERAL REGISTER: WHAT IT IS AND HOW TO USE IT

FOR: Any person who uses the Federal Register and Code of Federal Regulations.

WHO: Sponsored by the Office of the Federal Register.

WHAT: Free public briefings (approximately 3 hours) to present:

1. The regulatory process, with a focus on the Federal Register system and the public's role in the development of regulations.
2. The relationship between the Federal Register and Code of Federal Regulations.
3. The important elements of typical Federal Register documents.
4. An introduction to the finding aids of the FR/CFR system.

WHY: To provide the public with access to information necessary to research Federal agency regulations which directly affect them. There will be no discussion of specific agency regulations.

WHEN: Tuesday, July 10, 2012
9 a.m.–12:30 p.m.

WHERE: Office of the Federal Register
Conference Room, Suite 700
800 North Capitol Street, NW.
Washington, DC 20002

RESERVATIONS: (202) 741–6008

Printed on recycled paper.

Contents

Federal Register

Vol. 77, No. 129

Thursday, July 5, 2012

Agriculture Department
See Forest Service
See Rural Business-Cooperative Service

Architectural and Transportation Barriers Compliance Board

PROPOSED RULES
Establishment of Medical Diagnostic Equipment Accessibility Standards Advisory Committee, 39656
NOTICES
Performance Review Board Membership, 39677

Bureau of Consumer Financial Protection
RULES
Confidential Treatment of Privileged Information, 39617–39623

Census Bureau
NOTICES
Agency Information Collection Activities; Proposals, Submissions, and Approvals:
2013 Current Population Survey Annual Social and Economic Supplement Content Test, 39678–39679

Children and Families Administration
NOTICES
Agency Information Collection Activities; Proposals, Submissions, and Approvals:
U.S. Repatriation Program Forms, 39709–39710

Coast Guard
RULES
Safety Zones:
Barbara Harder Wedding Fireworks, Lake Erie, Lake View, NY, 39638–39640
Special Local Regulations and Safety Zones:
Marine Events in Captain of the Port Sector Long Island Sound Zone, 39633–39638
Special Local Regulations for Marine Events:
Potomac River, National Harbor Access Channel, MD, 39630–39632
Special Local Regulations:
Seattle Seafair Unlimited Hydroplane Race, 39632–39633

Commerce Department
See Census Bureau
See Industry and Security Bureau
See International Trade Administration
See National Oceanic and Atmospheric Administration
NOTICES
Agency Information Collection Activities; Proposals, Submissions, and Approvals, 39677–39678

Commodity Futures Trading Commission
RULES
Definitions; Corrections:
Swap Dealer, Security-Based Swap Dealer, Major Swap Participant, Major Security-Based Swap Participant and Eligible Contract Participant, 39626–39627

Defense Department
See Navy Department
RULES
Homeowners Assistance Program:
Application Processing, 39627–39629
PROPOSED RULES
Civilian Health and Medical Program of the Uniformed Services TRICARE:
Retail Pharmacy Program; Withdrawal, 39655
NOTICES
Agency Information Collection Activities; Proposals, Submissions, and Approvals, 39687–39688

Department of Transportation
See Pipeline and Hazardous Materials Safety Administration

Drug Enforcement Administration
NOTICES
Controlled Substances:
Proposed Adjustment to Aggregate Production Quotas for 2012, 39737–39741
Importers of Controlled Substances; Applications:
Myoderm, 39741

Education Department
NOTICES
Agency Information Collection Activities; Proposals, Submissions, and Approvals:
Institute of Education Sciences; FAFSA Completion Project Evaluation, 39688–39689

Energy Department
See Energy Efficiency and Renewable Energy Office
See Federal Energy Regulatory Commission
NOTICES
Applications to Export Electric Energy:
Dynasty Power, Inc., 39689–39690
IPR–GDF SUEZ Energy Marketing North America, Inc., 39689
Meetings:
State Energy Advisory Board; Teleconference, 39690

Energy Efficiency and Renewable Energy Office
NOTICES
Agency Information Collection Activities; Proposals, Submissions, and Approvals, 39690–39691

Environmental Protection Agency
RULES
Synchronizing the Expiration Dates of the Pesticide Applicator Certificate with the Underlying State or Tribal Certificate, 39640–39642
PROPOSED RULES
Approvals and Promulgations of Air Quality Implementation Plans:
Washington; Determination of Clean Data for 2006 24-Hour Fine Particulate Standard for Tacoma, Pierce County Nonattainment Area, 39657–39658
Proposed Approvals of Air Quality Implementation Plans:
Michigan; Determination of Attainment of 1997 Annual and 2006 24-Hour Fine Particle Standards for Detroit–Ann Arbor Nonattainment Area, 39659–39662

NOTICES
Agency Information Collection Activities; Proposals, Submissions, and Approvals, 39699–39700
Agency Information Collection Activities; Proposals, Submissions, and Approvals:
Arrival of Pesticides and Devices under FIFRA, 39703–39704
Generator Standards Applicable to Laboratories Owned by Eligible Academic Entities, 39700–39701
National Emission Standards for Hazardous Air Pollutants for Municipal Solid Waste Landfills (Renewal), 39702
NESHAP for Printing, Coating and Dyeing of Fabrics and Other Textiles, 39704–39705
Charter Renewals:
National Advisory Council for Environmental Policy and Technology, 39705
Meetings:
National Advisory Council for Environmental Policy and Technology, 39705

Executive Office of the President
See Presidential Documents

Federal Aviation Administration
RULES
Airworthiness Directives:
Pratt and Whitney Canada Turboprop Engines, 39624–39626
Airworthiness Standards:
Aircraft Engines; Technical Amendment, 39623–39624
PROPOSED RULES
Establishment of Class E Airspace:
Circle Town, MT, 39651–39652
La Belle, FL, 39652–39653
Proposed Establishments of Class E Airspace; and Proposed Amendments of Class E Airspace:
Reidsville, GA; Vidalia, GA, 39653–39654
Proposed Legal Interpretation; Correction, 39654–39655
NOTICES
Intents to Rule on Requests to Release Airport Property:
Portland – Hillsboro Airport, Hillsboro, OR, 39793–39794
Releases from Federal Grant Assurance Obligations:
Fresno Yosemite International Airport, Fresno, CA, 39794

Federal Communications Commission
NOTICES
Agency Information Collection Activities; Proposals, Submissions, and Approvals, 39705–39706

Federal Emergency Management Agency
RULES
Suspensions of Community Eligibility, 39642–39647
NOTICES
Assistance to Firefighters Grant Program:
Correction, 39717
Changes in Flood Hazard Determinations, 39717–39721
Proposed Flood Hazard Determinations, 39721–39722

Federal Energy Regulatory Commission
PROPOSED RULES
Electric Reliability Organization Definition of Bulk Electric System and Rules of Procedure, 39858–39881
NOTICES
Agency Information Collection Activities; Proposals, Submissions, and Approvals, 39691–39693
Applications:
National Currents Energy Services, LLC, 39694
Natural Currents Energy Services, LLC, 39693–39694
Combined Filings, 39694–39695
Complaints:
HollyFrontier Refining and Marketing LLC v. Osage Pipe Line Co., LLC, 39695
Environmental Assessments; Availability, etc.:
Driver Residue Pipeline Project, Atlas Pipeline Mid-Continent WestTex, LLC; Pioneer Natural Resources USA, Inc., 39696–39698
Idaho Power Co., 39695–39696
Records Governing Off-the-Record Communications, 39698–39699
Requests under Blanket Authorizations:
Transcontinental Gas Pipe Line Co., LLC, 39699

Federal Highway Administration
NOTICES
Limitations on Claims for Judicial Reviews of Actions:
Interstate 395 High Occupancy Vehicle Ramp At Seminary Road Project In Virginia; Final Federal Agency Actions, 39795

Federal Maritime Commission
NOTICES
Agreements Filed, 39706–39707
Ocean Transportation Intermediary License Applicants, 39707

Federal Railroad Administration
NOTICES
Petitions for Waivers of Compliance, 39795–39796

Fish and Wildlife Service
PROPOSED RULES
Endangered and Threatened Wildlife and Plants:
90-Day Finding on a Petition to List a Distinct Population Segment of the American Black Bear in Nevada, 39670–39674
90-Day Finding on Petition to List Maytenus cymosa, 39666–39670
NOTICES
Meetings:
U.S. Coral Reef Task Force, 39724

Food and Drug Administration
NOTICES
Draft Guidance for Industry; Availability :
Organ-Specific Warnings; Internal Analgesic, Antipyretic, and Antirheumatic Drug Products, etc., 39710–39711

Forest Service
NOTICES
Environmental Impact Statements; Availability, etc.:
Wallowa–Whitman National Forest, Baker County, OR; North Fork Burnt River Mining, 39675

Health and Human Services Department
See Children and Families Administration
See Food and Drug Administration
See Health Resources and Services Administration
See National Institutes of Health
NOTICES
Agency Information Collection Activities; Proposals, Submissions, and Approvals, 39707–39708
Declaration Renewals:
Emergency Use of All Oral Formulations of Doxycycline Accompanied by Emergency Use Information, 39708–39709

Health Resources and Services Administration
NOTICES
Agency Information Collection Activities; Proposals, Submissions, and Approvals, 39711–39712

Homeland Security Department
See Coast Guard
See Federal Emergency Management Agency

Housing and Urban Development Department
NOTICES
Agency Information Collection Activities; Proposals, Submissions, and Approvals:
Housing Choice Voucher Program Administrative Fee Study Data Collection for Full National Study, 39722–39724

Indian Affairs Bureau
NOTICES
Land Acquisitions:
19 Pueblos, 39724–39725
Pueblo of Santa Clara, 39726–39727
Pueblo of Santo Domingo, 39725–39726
Poarch Band of Creek Indians Alcohol Beverage Control Ordinance, 39727–39731
Swinomish Indian Tribal Community Liquor Legalization, Regulation and License Code, 39731–39733

Industry and Security Bureau
NOTICES
Shipping Tolerances for Export Licenses Issued by the Bureau of Industry and Security, 39679–39680

Interior Department
See Fish and Wildlife Service
See Indian Affairs Bureau
See National Park Service

Internal Revenue Service
PROPOSED RULES
Basis of Indebtedness of S Corporations to Their Shareholders; Correction, 39655

International Trade Administration
NOTICES
Antidumping Duty Administrative Reviews; Results, Extensions, Amendments, etc.:
Folding Metal Tables and Chairs from People's Republic of China, 39680–39682
Applications:
Duty-Free Entry of Scientific Instruments, 39682–39683
Changed Circumstances Reviews:
Aluminum Extrusions from People's Republic of China; Preliminary Results, 39683–39686

International Trade Commission
NOTICES
Investigations:
Certain Circular Welded Pipe and Tube from Brazil, India, Korea, Mexico, Taiwan, Thailand, and Turkey, 39736
Certain Ink Application Devices and Components Thereof and Methods of using Same; Determination, 39733–39735
Certain Integrated Circuit Packages Provided with Multiple Heat-Conducting Paths and Products Containing Same, 39735–39736
Certain Integrated Solar Power Systems and Components Thereof, 39736–39737
Stainless Steel Butt-Weld Pipe Fittings from Italy, Malaysia, and Philippines, 39735

Justice Department
See Drug Enforcement Administration
See National Institute of Corrections
NOTICES
Lodgings of Proposed Consent Decrees:
Dairyland Power Cooperative under the Clean Air Act, 39737

Labor Department
See Occupational Safety and Health Administration

Maritime Administration
NOTICES
Administrative Waivers of Coastwise Trade Laws:
Vessel CHA–CHING, 39796–39797
Vessel RANGER, 39796

National Institute of Corrections
NOTICES
Solicitations for Cooperative Agreements – Curricula Reviews and Revisions:
NIC Trainer Development Series, 39741–39743

National Institutes of Health
NOTICES
Meetings:
Center for Scientific Review, 39716–39717
Eunice Kennedy Shriver National Institute of Child Health and Human Development, 39712–39713, 39717
National Cancer Institute, 39713–39714
National Heart, Lung, and Blood Institute, 39716
National Institute of Arthritis and Musculoskeletal and Skin Diseases, 39714
National Institute of Diabetes and Digestive and Kidney Diseases, 39716
National Institute of General Medical Sciences, 39714
National Institute on Alcohol Abuse and Alcoholism, 39713, 39716
National Library of Medicine, 39715

National Oceanic and Atmospheric Administration
RULES
Atlantic Highly Migratory Species:
Commercial Gulf of Mexico Non-Sandbar Large Coastal Shark Fishery, 39648
Fisheries of the Caribbean, Gulf of Mexico, and South Atlantic:
Reef Fish Fishery of Gulf of Mexico; Extension of 2012 Gulf of Mexico Recreational Red Snapper Season, 39647
Fisheries of the Exclusive Economic Zone Off Alaska:
Other Rockfish in Western Regulatory Area of Gulf of Alaska, 39649
Pacific Ocean Perch in Western Regulatory Area of Gulf of Alaska, 39649–39650
NOTICES
Environmental Impact Statements; Availability, etc.:
Restoration Plan to Compensate for Injuries to Natural Resources in Portland Harbor, OR, 39686–39687

National Park Service
NOTICES
Agency Information Collection Activities; Proposals, Submissions, and Approvals:
Appalachian Train Management Partner Survey, 39733

National Transportation Safety Board
NOTICES
Meetings:
General Aviation Search and Rescue, 39745

Navy Department
RULES
Certifications and Exemptions under International Regulations for Preventing Collisions at Sea, 1972, 39629–39630

Nuclear Regulatory Commission
NOTICES
Draft Regulatory Guides; Availability:
Fuel Oil Systems for Emergency Power Supplies, 39745–39746
Environmental Assessments; Availability, etc.:
Dominion Nuclear Connecticut, Inc., Millstone Power Station, Unit 2, 39746–39747

Occupational Safety and Health Administration
NOTICES
Requests for Nominations:
Federal Advisory Council on Occupational Safety and Health, 39743–39745

Pipeline and Hazardous Materials Safety Administration
PROPOSED RULES
Hazardous Materials; Reverse Logistics, 39662–39666
NOTICES
Agency Information Collection Activities; Proposals, Submissions, and Approvals, 39797–39798
Clarification Policy on Initial Fitness Review for Classification Approvals, 39798

Postal Regulatory Commission
NOTICES
Changes in Postal Rates, 39747–39748

Presidential Documents
PROCLAMATIONS
Trade:
Generalized System of Preferences Duty-Free Treatment; Modifications (Proc. 8840), 39883–39893

Railroad Retirement Board
NOTICES
Privacy Act; Computer Matching Program, 39748–39749

Rural Business-Cooperative Service
NOTICES
Applications for Licensing as Non-leveraged Rural Business Investment Company under Rural Business Investment Program, 39675–39677

Securities and Exchange Commission
RULES
Definitions; Corrections:
Swap Dealer, Security-Based Swap Dealer, Major Swap Participant, Major Security-Based Swap Participant and Eligible Contract Participant, 39626–39627
NOTICES
Meetings; Sunshine Act, 39749
Self-Regulatory Organizations; Proposed Rule Changes:
BATS Exchange, Inc., 39781–39783
BOX Options Exchange LLC, 39789–39792
C2 Options Exchange, Inc., 39757–39758, 39777–39779
Chicago Board Options Exchange, Inc., 39779–39781
EDGA Exchange, Inc., 39783–39789
EDGX Exchange, Inc., 39749–39751, 39768–39771
ICE Clear Credit LLC, 39760–39761
NASDAQ OMX PHLX LLC, 39771–39773
NASDAQ Stock Market LLC, 39751–39752, 39773–39774
National Stock Exchange, Inc., 39767–39768
NYSE Arca, Inc., 39763–39767
NYSE MKT LLC, 39761–39763
Suspension of Trading Orders:
Apogee Technology, Inc., 39792–39793

Small Business Administration
NOTICES
Disaster Declarations:
Michigan, 39793

Transportation Department
See Federal Aviation Administration
See Federal Highway Administration
See Federal Railroad Administration
See Maritime Administration
See Pipeline and Hazardous Materials Safety Administration
PROPOSED RULES
Nondiscrimination on Basis of Disability in Air Travel:
Draft Technical Assistance Manual, 39800–39855
NOTICES
Applications for Certificates of Public Convenience and Necessity and Foreign Air Carrier Permits, 39793

Treasury Department
See Internal Revenue Service

Separate Parts In This Issue

Part II
Transportation Department, 39800–39855

Part III
Energy Department, Federal Energy Regulatory Commission, 39858–39881

Part IV
Presidential Documents, 39883–39893

Reader Aids

Consult the Reader Aids section at the end of this page for phone numbers, online resources, finding aids, reminders, and notice of recently enacted public laws.

To subscribe to the Federal Register Table of Contents LISTSERV electronic mailing list, go to http://listserv.access.gpo.gov and select Online mailing list archives, FEDREGTOC-L, Join or leave the list (or change settings); then follow the instructions.

CFR PARTS AFFECTED IN THIS ISSUE

A cumulative list of the parts affected this month can be found in the Reader Aids section at the end of this issue.

3 CFR

Proclamations:

8840 39885

12 CFR

1070 39617

14 CFR

33 39623
39 39624

Proposed Rules:

71 (3 documents) 39651, 39652, 39653
121 39654
382 39800

17 CFR

1 39626
240 39626

18 CFR

Proposed Rules:

40 39858

26 CFR

Proposed Rules:

1 39655

32 CFR

239 39627
706 39629

Proposed Rules:

199 39655

33 CFR

100 (3 documents) 39630, 39632, 39633
165 (2 documents) 39633, 39638

36 CFR

Proposed Rules:

1195 39656

40 CFR

171 39640

Proposed Rules:

52 (2 documents) 39657, 39659

44 CFR

64 39642

49 CFR

Proposed Rules:

171 39662
173 39662
178 39662

50 CFR

622 39647
635 39648
679 (2 documents) 39649

Proposed Rules:

17 (2 documents) 39666, 39670

Rules and Regulations

Federal Register

Vol. 77, No. 129

Thursday, July 5, 2012

This section of the FEDERAL REGISTER contains regulatory documents having general applicability and legal effect, most of which are keyed to and codified in the Code of Federal Regulations, which is published under 50 titles pursuant to 44 U.S.C. 1510.

The Code of Federal Regulations is sold by the Superintendent of Documents. Prices of new books are listed in the first FEDERAL REGISTER issue of each week.

BUREAU OF CONSUMER FINANCIAL PROTECTION

12 CFR Part 1070

[Docket No. CFPB–2012–0010]

RIN 3170–AA20

Confidential Treatment of Privileged Information

AGENCY: Bureau of Consumer Financial Protection.

ACTION: Final rule.

SUMMARY: The Bureau of Consumer Financial Protection (Bureau) is amending its rules relating to the confidential treatment of information by adding a new section providing that the submission by any person of any information to the Bureau in the course of the Bureau's supervisory or regulatory processes will not waive or otherwise affect any privilege such person may claim with respect to such information under Federal or State law as to any other person or entity. In addition, the Bureau has amended its regulations to provide that the Bureau's provision of privileged information to another Federal or State agency does not waive any applicable privilege, whether the privilege belongs to the Bureau or any other person.

DATES: This rule is effective August 6, 2012.

FOR FURTHER INFORMATION CONTACT: John R. Coleman, Senior Litigation Counsel, Office of General Counsel, Bureau of Consumer Financial Protection, 1700 G Street NW., Washington, DC 20552, at (202) 435–7770.

SUPPLEMENTARY INFORMATION:

I. Background

Title X of the Dodd-Frank Wall Street Reform and Consumer Protection Act (Dodd-Frank Act) established the Bureau as an independent agency within the Federal Reserve System responsible for regulating the offering and provision of consumer financial products and services under the Federal consumer financial laws.[1] The Bureau's mission is to ''implement and, where applicable, enforce Federal consumer financial law consistently for the purpose of ensuring that all consumers have access to markets for consumer financial products and services and that markets for consumer financial products are fair, transparent, and competitive.'' [2] Congress equipped the Bureau with a number of tools to achieve this mission, including: broad authority to promulgate rules to regulate the consumer financial marketplace; a mandate to educate and inform consumers to make better informed financial decisions; the ability to bring enforcement actions to remedy violations of Federal consumer financial law; and the authority to supervise institutions for compliance with Federal consumer financial law.

This final rule amends the Bureau's rules relating to the confidential treatment of information, 12 CFR part 1070, subpart D, in order to facilitate the exercise of the Bureau's authorities by ensuring that the confidentiality of privileged information is not vitiated by any person's disclosure of such information to the Bureau in the course of its supervisory or regulatory processes, or by the Bureau's exchange of privileged information with another Federal or State agency.

The Bureau is in the process of reviewing comments received on other aspects of the interim final rule that governs the Bureau's disclosure of records and information. *See* 76 FR 44242 (July 22, 2011) (codified at 12 CFR part 1070). The Bureau intends to issue a final rule in response to those comments in the future.

II. Section-by-Section Analysis

A. Addition of 12 CFR 1070.48

Background

The Bureau has authority to supervise and examine insured depository institutions and credit unions with total assets of more than $10,000,000,000 as well as their affiliates and service providers, in order to assess their compliance with Federal consumer financial law, to obtain information about their activities subject to such laws and their associated compliance systems or procedures, and to detect and assess risks to consumers and to markets for consumer financial products and services.[3] This supervisory authority, and all related ''powers and duties,'' transferred to the Bureau from the prudential regulators on July 21, 2011.[4] In addition, in accordance with the goal of ensuring that Federal consumer law is ''enforced consistently, without regard to the status of a person as a depository institution, in order to promote fair competition[,]'' [5] Congress also provided the Bureau with nearly identical authority to supervise certain nondepository institutions.[6] The entities subject to the Bureau's supervisory authority are referred to herein as ''supervised entities.''

The Bureau's supervision program is focused on supervised entities' ''ability to detect, prevent, and correct practices that present a significant risk of violating the law and causing consumer harm.'' [7] Thus, while the Bureau is committed to remedying violations of Federal consumer financial law, the primary goal of the Bureau's supervision program is to prevent violations of law or consumer harm from occurring. To

[1] *See* Public Law 111–203, section 1011(a) (2010).

[2] *See* Dodd-Frank Act section 1021(a), 12 U.S.C. 5511(a).

[3] *See* Dodd-Frank Act section 1025(b)(1), (d), 12 U.S.C. 5515(b)(1), (d); *see also* Dodd-Frank Act section 1029A, 12 U.S.C. 5511 note (stating that this provision becomes effective on the designated transfer date, established by the Secretary of the Treasury as July 21, 2011).

[4] *See* Dodd-Frank Act section 1061, 12 U.S.C. 5581. The prudential regulators are the Office of the Comptroller of the Currency (OCC), the Board of Governors of the Federal Reserve System (Board), the Federal Deposit Insurance Corporation (FDIC), the National Credit Union Administration (NCUA), and the former Office of Thrift Supervision (OTS). *See* Dodd-Frank Act section 1002(24), 12 U.S.C. 5481(24). Although the prudential regulators retained primary authority to supervise smaller depository institutions and credit unions for compliance with Federal consumer financial law, the Bureau has certain supervisory authorities with respect to these institutions, as well as the service providers to a substantial number of such institutions. *See* Dodd-Frank Act sections 1061(c)(1)(B), 1026(b), (c), (e), 12 U.S.C. 5581(c)(1)(B), 5516(b), (c), (e).

[5] *See* Dodd-Frank Act section 1021(b)(4), 12 U.S.C. 5511(b)(4).

[6] *See* Dodd-Frank Act section 1024(b), 12 U.S.C. 5514(b). The Bureau also has supervisory authority over service providers to such institutions. *See* Dodd-Frank Act section 1024(e), 12 U.S.C. 5514(e).

[7] *See* Consumer Financial Protection Bureau, Supervision and Examination Manual, Overview at 3 (''CFPB Examination Manual''), *available at www.consumerfinance.gov/guidance/supervision/manual/*.

this end, supervised entities are expected ''to have an effective compliance management system adapted to [their] business strategy and operations.'' [8] Indeed, every ''CFPB examination will include review and testing of components of the supervised entity's compliance management system.'' [9]

An independent audit program and regular self-testing for violations of Federal consumer financial law are essential elements of a strong compliance program.[10] Supervised entities sometimes rely upon counsel to conduct these analyses. As a consequence, in exercising its supervisory authority, the Bureau may request from its supervised entities information that may be subject to one or more statutory or common law privileges, including the attorney-client privilege and attorney work product protection.[11] Certain supervised entities have expressed concern, based on cases decided outside of the supervisory context,[12] that compliance with the Bureau's supervisory requests for such information may result in a waiver of any applicable privilege with respect to third parties.

On January 4, 2012, the Bureau issued a bulletin, CFPB Bulletin 12–01, in which it stated its view that ''because entities must comply with the Bureau's supervisory requests for information, the provision of privileged information to the Bureau would not be considered voluntary and would thus not waive any privilege that attached to such information.'' [13] Further, the Bulletin observed that the prudential regulators' authority to examine very large depository institutions and credit unions, and their affiliates, for compliance with Federal consumer financial law, as well as all related powers and duties, transferred to the Bureau on July 21, 2011.[14] The Bureau interprets this transfer of authority as including the ability, codified at 12 U.S.C. 1785(j) & 1828(x), to obtain privileged information without waiving any applicable privilege claimed by the provider of the information.

On March 15, 2012, in order to provide further reassurances to its supervised entities, the Bureau published a notice and request for comment regarding its proposal to add a new section to its rules relating to the confidential treatment of information that would provide that any person's submission of information to the Bureau in the course of the Bureau's supervisory or regulatory processes will not waive any privilege such person may claim with respect to such information as to any other person or entity.[15] The proposed rule was intended to provide protections for the confidentiality of privileged information substantively identical to the statutory provisions that apply to the submission of privileged information to the prudential regulators, and State and foreign bank regulators.[16] The notice of proposed rulemaking reiterated the position set forth in CFPB Bulletin 12–01 that the submission of privileged information to the Bureau would not, under existing law, result in a waiver of any applicable privilege, and explained that the Bureau was exercising its rulemaking authority to codify this result in order to provide maximum assurances of confidentiality to the entities subject to its supervisory or regulatory authority. As a result, the proposed rule was intended to govern any claim, in Federal or State court, that a person has waived any applicable privilege, including the privilege for attorney work product, by providing such information to the Bureau in the exercise of its supervisory or regulatory processes.[17]

Response to Comments

The Bureau received 26 comment letters regarding the proposed rule. These comments were submitted on behalf of twenty trade associations (one letter was submitted on behalf of five trade associations), eight individual financial institutions, and two individuals. A majority of the comments supported adoption of the proposed rule; however, several commenters recommended that the Bureau not adopt the proposed rule, but wait for Congress to address institutions' concerns regarding privilege waiver through the enactment of legislation. Although the Bureau has expressed support for legislation codifying the Bureau's view that the submission of privileged information to the Bureau does not result in a waiver,[18] the Bureau does not believe such legislation is necessary. As discussed below, Congress has delegated to the Bureau the authority to issue regulations to ensure the confidentiality of information submitted to the Bureau and to facilitate the exercise of its supervisory authority. Delegated rulemaking authority is designed to relieve Congress of the obligation to anticipate and address every issue that arises in an agency's administration of the laws entrusted to its care.[19] Accordingly, while the Bureau continues to support appropriate legislation, the possibility of future congressional action does not counsel against the Bureau's exercise of its existing authority to protect the confidentiality of information it obtains in the course of its supervisory or regulatory processes.

Some commenters disagreed with the Bureau's position, stated in the notice of proposed rulemaking, that the Bureau has the authority to compel privileged information and that the submission of privileged information to the Bureau pursuant to this authority does not waive any applicable privilege because it is not voluntary.[20] Commenters

[8] CFPB Examination Manual, Compliance Management Review (CMR) at 1.

[9] *Id.* The Bureau has adopted the Federal Financial Institution Examination Council's (FFIEC) Uniform Consumer Compliance Rating System. Institutions are eligible for the highest rating in this system only if the Bureau determines that they have ''[a]n effective compliance program, including an efficient system of internal procedures and controls.'' CFPB Examination Manual, Examinations at 9.

[10] CFPB Examination Manual, CMR at 8–12.

[11] The final rule applies to ''any privilege'' that applies to information obtained by the Bureau.

[12] *See In re Pacific Pictures Corp.,* 679 F.3d 1121, 1127 (9th Cir. 2012) (collecting cases).

[13] CFPB Bulletin 12–01, at 2, *available at http://files.consumerfinance.gov/f/2012/01/GC_bulletin_12-01.pdf.*

[14] *See* Dodd-Frank Act section 1061(b), 12 U.S.C. 5581(b).

[15] *See* 77 FR 15286, 15286 (March 15, 2012) (hereinafter ''notice of proposed rulemaking'').

[16] *Id.* at 15287.

[17] *Id.* at 15289.

[18] *See How Will the CFPB Function Under Richard Cordray?: Hearing Before the Subcomm. on TARP, Fin. Serv. & Bailouts of Pub. & Private Programs of the H. Comm. on Oversight & Gov't Reform,* 112th Cong. (2012) (Statement of Richard Cordray).

[19] *See United States* v. *Mead,* 533 U.S. 218, 229 (2001) (''Congress * * * may not have expressly delegated authority or responsibility to implement a particular provision or fill a particular gap. Yet it can still be apparent from the agency's generally conferred authority and other statutory circumstances that Congress would expect the agency to be able to speak with the force of law when it addresses ambiguity in the statute or fills a space in the enacted law, even one about which 'Congress did not actually have an intent' as to a particular result.'') (quoting *Chevron, U.S.A., Inc.* v. *Natural Res. Def. Council,* 467 U.S. 837, 845 (1984)). As noted, the Bureau's exercise of rulemaking authority is consistent with Congress's broad grant to the Bureau of all powers and duties ''relat[ing]'' to the prudential regulators' transferred supervision authority, and by its emphasis on the need for consistent regulatory treatment of depository and nondepository institutions.

[20] *See* 77 FR at 15288 & n. 16 (citing *Boston Auction Co.* v. *W. Farm Credit Bank,* 925 F. Supp. 1478, 1481–82 (D. Haw. 1996) (no waiver where documents provided to examiners from the Farm Credit Administration because disclosure not voluntary); *Vanguard Sav. & Loan Assn* v. *Banks,* No. 93–cv–4267, 1995 WL 555871, at *5 (E.D. Pa. Sept. 18, 1995) (holding that the disclosure of work product privileged information to state bank regulator is ''involuntary'' and, therefore, does not waive the privilege); *United States* v. *Buco,* Crim. No. 90–10252–H, 1991 WL 82459, at *2 (D. Mass. May 13, 1991) (holding that ''the public interest served by encouraging the free flow of information

argued that, for this reason, the rule will not effectively preserve the privileged nature of information submitted to the Bureau. The Bureau continues to adhere to the position that it can compel privileged information pursuant to its supervisory authority. The prudential regulators have consistently taken the view that they can compel privileged information pursuant to their supervisory authority,[21] and the case law that directly addresses the issue supports the view that the submission of privileged information to a supervisory agency is not voluntary and therefore does not result in a privilege waiver.[22] The Bureau's authority in this regard is not, however, a prerequisite to its authority to promulgate the rule.

The validity and effectiveness of the rule depends on the scope of the Bureau's rulemaking authority, not on the Bureau's authority to compel privileged information.[23] In the preamble to the proposed rule, the Bureau noted that it had issued CFPB Bulletin 12–01, which took the position ''that, like the prudential regulators, its supervisory authority encompasses the authority to compel supervised entities to provide privileged information and, therefore, a supervised entity's submission of privileged information to the Bureau in response to a request is not a voluntary disclosure that would result in the waiver of any applicable privilege.'' [24] Consistent with this view of the law, the Bureau observed that the effect of the proposed rule would be to codify the result courts considering claims of waiver would reach in the absence of the rule; thus, the rulemaking would give further assurance to regulated entities regarding the issue of waiver.[25] The Bureau was clear, however, that the proposed rule would protect the privileged nature of information submitted to the Bureau even assuming courts would have reached a different determination under existing law.[26] Thus, the Bureau did not indicate in the notice of proposed rulemaking that its authority to promulgate the proposed rule depends on its authority to compel privileged information, or that the proposed rule would codify the Bureau's claimed authority to compel privileged information. To the contrary, the Bureau stated that ''the rule does not impose obligations on covered persons to provide information; rather, any requirement to provide information stems from the Bureau's authority under existing law.'' [27]

In fact, the rule is authorized by the rulemaking authority delegated to the Bureau in the Dodd-Frank Act. In the notice of proposed rulemaking, the Bureau cited three sources of rulemaking authority that support the rule. First, the Bureau relied on ''its authority to 'prescribe rules regarding the confidential treatment of information obtained from persons in connection with the exercise of its authorities under Federal consumer financial laws.' '' [28] The Bureau also relied upon ''its general rulemaking authority to 'prescribe rules * * * as may be necessary or appropriate to enable the Bureau to administer and carry out the purposes and objectives of the Federal consumer financial laws, and prevent evasions thereof,'' and its authority to ''prescribe rules to facilitate the supervision of [nondepository institutions] and assessment and detection of risks to consumers.'' [29] As the Bureau noted, the proposed rule is an appropriate means to facilitate the Bureau's supervision program because, by providing supervised entities greater assurances that their privileges will be maintained, it encourages the free flow of information that is essential to an effective supervision program.[30] With respect to large depository institutions and credit unions and their affiliates, the rule is also supported by the Bureau's interpretation of Dodd-Frank Act section 1061(b) as including within its grant to the Bureau of all powers and duties relating to the prudential regulators' transferred supervisory authority the power, codified at 12 U.S.C. 1785(j) & 1828(x), to receive privileged information from supervised entities without effecting a waiver. The rule is intended to codify the Bureau's interpretation of section 1061 in this respect.

Commenters generally agreed that an effective supervision program requires that the Bureau be able to obtain privileged information, and that the proposed rule would facilitate such access. As one trade association commenter observed, ''the Bureau needs to have a trusting and open relationship with its supervised entities, which includes having appropriate access to certain privileged information.'' A large financial services provider agreed that the proposed rule would ''yield numerous benefits, chief among them encouraging the free flow of information between supervised persons and their counsel and between supervised persons and the CFPB.'' Another trade association agreed that ''the preservation of existing legal privileges * * * is vitally important to the functioning of an effective regulatory and supervisory framework.'' Commenters also generally agreed with the Bureau that the same standards should apply to entities supervised by the Bureau as to entities currently or formerly supervised by the prudential regulators. These comments confirm the Bureau's judgment in the exercise of its rulemaking authorities that the rule will ensure the confidentiality of information it obtains in the course of its supervisory or regulatory processes and is necessary or appropriate to administer or facilitate the exercise of its supervisory responsibilities.

No commenters argued that the rule was not within the plain text of the rulemaking authority upon which the Bureau relies, but some commenters suggested that Congress's failure to amend 12 U.S.C. 1828(x) to include the Bureau when it enacted the Dodd-Frank Act raises the negative inference that Congress did not intend the Bureau to accomplish the same end through an exercise of its rulemaking authority. The text of both the Federal Deposit

between the banks and their Federal regulators is substantial; a rule which provided that a bank generally waived its attorney-client privilege as to materials submitted to federal regulators would substantially impair that interest.'').

[21] *See, e.g.,* OCC Interpretive Letter, 1991 WL 338409 (Dec. 3, 1991); Statement of Scott Alvarez, General Counsel of the Board of Governors of the Federal Reserve System, before the H. Fin. Servs. Comm. at 2 (May 17, 2012) (''The Federal Reserve examines, on a regular basis, institutions for which we have been granted supervisory authority by Congress and, through that authority, has complete and unfettered access to an institution's most sensitive financial information and processes, including information that would otherwise be privileged and not subject to public disclosure.'') *available at http://financialservices.house.gov/UploadedFiles/HHRG-112-BA00-WState-SAlvarez-20120517.pdf.*

[22] *See* supra n. 20. Reliance upon case law outside of the supervisory context is misplaced as doing so ignores the ''well established distinction between supervision and law enforcement.'' *Cuomo* v. *Clearing House Assoc.,* 557 U.S. 519, 129 S. Ct. 2710, 2717 (2009).

[23] Indeed, the Bureau intends the rule to also govern claims of waiver related to the voluntary submission of privileged information to the Bureau.

[24] *See* 77 FR at 15288.

[25] *Id.* at 15290.

[26] *Id.*

[27] *Id.*

[28] *See id.* at 15289–90 (quoting Dodd-Frank Act section 1022(c)(6)(A), 12 U.S.C. 5512(c)(6)(A)).

[29] *See id.* at 15290 (citing Dodd-Frank Act sections 1022(b)(1), 1024(b)(7)(A), 12 U.S.C. 5512(b)(1) 5514(b)(7)(A)).

[30] *See, e.g., In re Subpoena Served Upon the Comptroller of the Currency, and Sec'y of the Bd. of Governors of the Fed. Reserve Sys.,* 967 F.2d 630, 634 (D.C. Cir. 1992) (''Because bank supervision is relatively informal and more or less continuous, so too must be the flow of communication between the bank and the regulatory agency. Bank management must be open and forthcoming in response to the inquiries of bank examiners, and the examiners must in turn be frank in expressing their concerns about the bank. These conditions simply could not be met as well if communications between the bank and its regulators were not privileged.'')

Insurance Act and the Dodd-Frank Act suggest otherwise. First, 12 U.S.C. 1828(x) itself cautions against construing the protections it affords to information submitted to the Federal banking agencies as suggesting that ''any person waives any privilege applicable to information that is submitted or transferred under any circumstance to which [it] does not apply.'' 12 U.S.C. 1828(x)(2)(A). Second, nothing in either the Federal Deposit Insurance Act or the Dodd-Frank Act suggests that Congress intended depository institutions or credit unions with more than $10,000,000,000 in assets, or nondepository entities subject to supervision by the Bureau, to be entitled to less protection for the confidentiality of their information than smaller depository institutions or credit unions supervised for compliance with Federal consumer financial law by the prudential regulators or state bank regulators. To the contrary, Congress explicitly authorized the Bureau to exercise its authority—including the rulemaking authority relied upon here—to ensure that ''Federal consumer financial law is enforced consistently, without regard to the status of a person as a depository institution, in order to promote fair competition.'' [31] Thus, the Bureau does not believe that Congress's silence regarding this provision of the Federal Deposit Insurance Act suggests that the Bureau lacks the rulemaking authority to promulgate section 1070.48. Congress has entrusted the Bureau with administering and implementing Title X of the Dodd-Frank Act, the Consumer Financial Protection Act of 2010,[32] and the Bureau is adopting section 1070.48 pursuant to the rulemaking authorities expressly provided under that law. Accordingly, section 1070.48 is a valid exercise of the Bureau's rulemaking authority and will govern third parties' claims of waiver based on the submission of privileged information by any person to the Bureau.[33]

Several commenters asked the Bureau to make clear that the rule would apply to the submission of privileged information by insured depository institutions or credit unions with $10,000,000 or less in assets, as defined in section 1026(a) of the Dodd-Frank Act. As the commenters note, although the prudential regulators retain primary supervisory authority over these institutions, the Bureau has authority, at its discretion, to participate in the prudential regulators' examinations of these institutions on a sampling basis.[34] The Bureau may also require reports from smaller depository institutions and credit unions as necessary to support its implementation of Federal consumer financial law, to support its examination of these institutions, and ''to assess and detect risks to consumers and consumer financial markets.'' [35] Although the need for the rule has arisen primarily in the context of the Bureau's supervision of larger depository institutions and credit unions, the term ''person'' used by section 1070.48 is not intended to be limited to such institutions, but is intended to be interpreted broadly in accordance with the definition of that term in 12 CFR 1070.2. Accordingly, to the extent smaller depository institutions or credit unions submit privileged information to the Bureau in the course of the Bureau's supervisory or regulatory processes, section 1070.48 will govern any claim, in Federal or State court, that such submission resulted in a waiver of the privilege.

Commenters also sought clarification as to whether the rule would apply to claims that institutions have waived protections afforded to attorney work product by submitting such information to the Bureau. The Bureau does intend the rule's reference to ''privilege'' to encompass ''any privilege'' that applies to information submitted by the Bureau, including the attorney work product protection. In fact, in discussing the need for the rule in the notice of proposed rulemaking, the Bureau began by observing that it ''will at times request from its supervised entities information that may be subject to one or more statutory or common law privileges, including, for example, the attorney-client privilege and attorney work product protection.'' [36] The Bureau believes that interpreting the term ''privilege'' as including the protection afforded by the work product doctrine is consistent with courts' treatment of the term,[37] and with the purpose of the rule. Section 1070.48 is intended to facilitate the free flow of information between the Bureau and its supervised institutions by reassuring such institutions that the submission of information to the Bureau will not affect the institutions' ability to protect it from disclosure to third parties. This purpose is served by construing the term privilege, as used in the section 1070.48, to include attorney work product. Accordingly, the Bureau interprets the term ''privilege'' to include the protection afforded by the work product doctrine.

Several commenters asked the Bureau to reaffirm its policy, as expressed in CFPB Bulletin 12–01, that it will request privileged information only in limited circumstances. As noted in CFPB Bulletin 12–01, the Bureau recognizes the important interests served by the common law privileges, in particular the attorney-client privilege. The Bureau understands that compliance with Federal consumer financial law is served by policies that do not discourage those subject to its supervisory or regulatory authority from seeking the advice of counsel. Accordingly, the Bureau continues to adhere to its policy to request submission of privileged information only when it determines that such information is material to its supervisory objectives and that it cannot practicably obtain the same information from non-privileged sources. The Bureau also continues to adhere to its policy of giving ''due consideration to supervised institutions' requests to limit the form and scope of any supervisory request for privileged information.'' [38] The Bureau believes that its policies regarding requests for privileged information are consistent with those of the prudential regulators.[39]

In light of these policies, the Bureau disagrees with the contention of several commenters that the final rule will have the effect of chilling attorney-client communications within supervised entities. To the contrary, the final rule encourages and strengthens communications between supervised entities and their attorneys by providing additional protections for the

[31] *See* Dodd-Frank Act section 1021(b)(4), 12 U.S.C. 5511(b)(4). In similar circumstances, the United States Court of Appeals for the Third Circuit expressly refused to ''infer an intention to prohibit [a] selective waiver rule from Congress's'' failure to enact a statutory selective waiver provision sought by the Securities and Exchange Commission. *See Westinghouse Elec. Corp.* v. *Republic of Philipines,* 951 F.2d 1414, 1427 n.15 (1991).

[32] *See* Dodd-Frank Act section 1022(a); 12 U.S.C. 5512(a).

[33] *See Westinghouse,* 951 F.2d at 1427 (suggesting that it would not have found a waiver if the SEC's confidentiality rule had ''justified a reasonable belief on Westinghouse's part that the attorney-client privilege w[ill] be preserved.'').

[34] *See* Dodd-Frank Act sections 1061(c)(1)(B), 1026(c); 12 U.S.C. 5581(c)(1)(B), 5516(c).

[35] *See* Dodd-Frank Act section 1026(b); 12 U.S.C. 5516(b).

[36] *See* 77 FR at 15286.

[37] The protection afforded to information subject to the work product doctrine is often referred to as a privilege, albeit a qualified one. *See* Edna S. Epstein, *The Attorney-Client Privilege and Work Product Doctrine,* 792 (5th ed. 2007) (''The words 'doctrine,' 'immunity,' and 'privilege' (among others) have been used in naming the protection given work product. Any of the terms is probably appropriate.''); *see also United States* v. *Nobles,* 422 U.S. 225, 237 (1975); *Solis* v. *Food Emp'r Labor Relations Ass'n,* 644 F.3d 221, 231 (4th Cir. 2011); *Hernandez* v. *Tanninen,* 604 F.3d 1095, 1100 (9th Cir. 2010).

[38] *See* CFPB Bulletin 12–01 at 3.

[39] *See, e.g.,* Office of the Comptroller of the Currency, *Access to Privileged Information,* 2000 WL 226431 (Feb. 2000).

confidentiality of those communications. As the Bureau made clear in the notice of proposed rulemaking, the rule itself does not require the submission of privileged information, but instead merely provides protections for privileged information that is submitted to the Bureau, voluntarily or otherwise. As stated above, to the extent the Bureau requests privileged information from supervised entities, it will do so only when it determines that such information is material to its supervisory objectives and that it cannot practicably obtain the same information from non-privileged sources.

Commenters also expressed concern regarding the Bureau's disclosure to other agencies of attorney-client or work product privileged information submitted to the Bureau in the course of its supervisory process. The Bureau's policy for the treatment of confidential supervisory information generally is expressed in CFPB Bulletin 12–01, which states, in pertinent part:

> [T]he Bureau will not routinely share confidential supervisory information with agencies that are not engaged in supervision. Except where required by law, the Bureau's policy is to share confidential supervisory information with law enforcement agencies, including State Attorneys General, only in very limited circumstances and upon review of all the relevant facts and considerations. The significance of the law enforcement interest at stake will be an important consideration in any such review. However, even the furtherance of a significant law enforcement interest will not always be sufficient, and the Bureau may still decline to share confidential supervisory information based on other considerations, including the integrity of the supervisory process and the importance of preserving the confidentiality of the information.[40]

This policy applies to the Bureau's treatment of all confidential supervisory information, including the instances in which the Bureau is asked to share with a law enforcement agency confidential supervisory information that is also subject to the attorney-client or work product privileges. The Bulletin's presumption against sharing confidential supervisory information would be even stronger in such instances.

As stated in CFPB Bulletin 12–01, ''[b]y articulating its policy regarding its treatment of confidential supervisory information, the Bureau does not intend to limit its use of such information in administrative or judicial proceedings, subject to appropriate protective orders.'' [41]

Conclusion

For the foregoing reasons, the Bureau adopts the proposed rule without modification.

B. Amendment of Section 1070.47(c)

On July 28, 2011, the Bureau issued an interim final rule providing that ''[t]he provision by the CFPB of any confidential information pursuant to [12 CFR part 1070, subpart D] does not constitute a waiver, or otherwise affect, any privilege any agency or person may claim with respect to such information under federal law.'' 12 CFR 1070.47(c). In the notice of proposed rulemaking, the Bureau proposed readopting this rule in modified form to create a non-waiver provision substantively similar to that codified in section 11 of the Federal Deposit Insurance Act,[42] with the exception that the rule will also apply to the disclosure of privileged information to State agencies in addition to Federal agencies. The primary purpose of the proposed rule is to protect the privileges of the Bureau in the context of a joint investigation or coordinated examination. The rule will, however, also foreclose claims that any other person's privilege has been waived by the Bureau's disclosure of that person's privileged information to another Federal or State agency.

The Bureau received comparatively few comments related to its proposed revision of section 1070.47(c). As noted, some commenters expressed concern regarding the Bureau's treatment of attorney-client and attorney work product privileged information obtained in the course of its supervisory or regulatory processes, including whether the Bureau intends to provide such privileged information to other Federal or State agencies. One commenter suggested that the term ''State agency'' in section 1070.47(c) be defined to exclude State attorneys general, and suggested that the Bureau should not share with a State agency the privileged information of a regulated entity that relates to pending or anticipated litigation between the State agency and the entity.

As addressed above in the discussion of section 1070.48, the ordinary presumption that the Bureau will not share confidential supervisory information is even stronger when the confidential supervisory information is also subject to the attorney-client or work product privilege. Although section 1070.47(c) will protect any person's privileged information from claims of waiver, it is primarily intended to protect the Bureau's privileges—including, for example, its examination privilege, its deliberative process privilege, and its law enforcement privilege—in the context of a coordinated examination or joint investigation.[43] For this reason, the Bureau declines to define the term ''State agency'' as excluding State attorneys general. If the Bureau were to share privileged information obtained from a person in the course of its supervisory or regulatory functions with another agency, for example a prudential regulator, the information would remain the property of the Bureau.[44] The agency receiving any person's privileged information from the Bureau would be required to maintain the confidentiality of the information and would be prohibited from further disclosure of such information without the Bureau's consent.[45]

Several commenters raised a specific concern regarding whether the corporate entity created by State regulators to administer the National Mortgage Licensing System (NMLS) will be considered a ''State agency'' for purposes of section 1070.47(c). According to the commenters, State regulators often use the NMLS to exchange confidential information of related companies. The Secure and Fair Enforcement for Mortgage Licensing Act (S.A.F.E. Act) protects the confidentiality of information exchanged by State and Federal agencies through the NMLS, and expressly provides that information provided to the NMLS ''may be shared with all State and Federal regulatory officials with mortgage industry oversight authority without the loss of privilege or the loss of confidentiality protections provided by Federal or State laws.'' 12 U.S.C. 5111(a); *see also* 12 CFR 1008.3 (implementing regulation). One commenter expressed concern that a court could find that this provision does not extend to the sharing of information relating to nonbank lenders. To address this concern, the commenter suggested adding an additional rule of construction to section 1070.47(c) to make clear that the term ''State agency'' includes any entity employed by a state agency to carry out its statutory responsibilities. The Bureau declines to adopt this suggestion because, in its view, the confidentiality provisions of the S.A.F.E. Act and its implementing regulations provide the necessary assurances of confidentiality.

[40] CFPB Bulletin 12–01, at 5.

[41] *Id.*

[42] *See* 12 U.S.C. 1821(t).

[43] *See* 77 FR at 15289.

[44] *See* 12 CFR 1070.47(a).

[45] *Id.*

Commenters also sought clarification that section 1070.47(c), like section 1070.48, would apply to attorney work product, as well as other types of privileged information. For the reasons set forth in the discussion of section 1070.48, the Bureau affirms that section 1070.47(c) is intended to apply to attorney work product and other privileged information.

Conclusion

For the foregoing reasons, the Bureau adopts the proposed rule without modification.

III. Legal Authority

A. Rulemaking Authority

The final rule is based on the Bureau's authority to ''prescribe rules regarding the confidential treatment of information obtained from persons in connection with the exercise of its authorities under Federal consumer financial laws.'' [46] As explained above, section 1070.48 will ensure that the confidential nature of privileged information obtained by the Bureau in the course of any supervisory or regulatory process is not waived, destroyed, or modified by compliance with the Bureau's requests for information. The revised version of section 1070.47(c) ensures that the sharing of information with Federal and State agencies mandated or authorized by Title X of the Dodd-Frank Act does not affect the confidential and privileged nature of the information. This protection is an appropriate use of the Bureau's authority to prescribe rules regarding the confidential treatment of information. Where any privileged information or material is submitted to the Bureau or shared by the Bureau as described in the final rule, the final rule prohibits discovery or disclosure of that information or material as if, and to the extent that, the privilege had not been waived.

In addition, the Bureau relies on its general rulemaking authority to ''prescribe rules * * * as may be necessary or appropriate to enable the Bureau to administer and carry out the purposes and objectives of the Federal consumer financial laws, and to prevent evasions thereof.'' [47] The supervision and other authorities provided by Title X of the Dodd-Frank Act are components of ''Federal consumer financial law.'' As explained above, the final rule is a necessary and appropriate measure to ensure that the Bureau is able to implement these authorities, and to do so consistently ''without regard to the status of a person as a depository institution, in order to promote fair competition.'' [48] As explained above, the final rule will promote candid dialogue between supervised entities and the Bureau, again furthering the purposes and objectives of Federal consumer financial law. In addition, by providing greater certainty to supervised entities, the final rule will also prevent evasions of the Bureau's supervisory and other authorities because supervised entities might improperly attempt to rely upon the risk of waiving privilege in order to evade or hamper the Bureau's supervision. The final rule is also meant to codify the Bureau's interpretation of section 1061(b) of the Dodd-Frank Act as granting the Bureau the prudential regulators' authority, codified at 12 U.S.C. 1785(j) and 1828(x), to obtain privileged information from very large depository institutions and credit unions and their affiliates without effecting a waiver.

Finally, the Bureau also relies on its authority to ''prescribe rules to facilitate the supervision of [nondepository institutions] and assessment and detection of risks to consumers.'' [49] For the reasons discussed above, the final rule will facilitate the Bureau's supervision of nondepository institutions and thereby enhance the Bureau's ability to assess and detect risks to consumers.

B. Section 1022(b)(2) of the Dodd-Frank Act

In developing the final rule, the Bureau considered potential benefits, costs, and impacts, and has consulted or offered to consult with the prudential regulators and the Federal Trade Commission, including regarding consistency with any prudential, market, or systemic objectives administered by such agencies.[50] The Bureau did not receive comments regarding the notice of proposed rulemaking's analysis of the proposed rule's potential benefits, costs, and impacts.

Section 1070.48 of the final rule provides that the submission by any person of information to the Bureau in the course of the Bureau's supervisory or regulatory processes does not waive or otherwise affect any privilege such person may claim with respect to such information under Federal or State law as to any other person or entity. Section 1070.47(c) of the final rule provides that the Bureau's provision of privileged information to another Federal or State agency does not waive any applicable privilege.

As explained above, the Bureau anticipates that section 1070.48 will most often apply in the context of a supervised entity's involuntary submission of privileged information to the Bureau.[51] In these circumstances, the final rule will not result in a determination regarding the privileged nature of information different than that which would have been reached in the absence of the rule, and would not be expected to impose costs on consumers or to impact consumers' access to consumer financial products or services. In circumstances in which section 1070.48 results in a determination regarding the privileged nature of information different than that which would be reached under existing law, the final rule will benefit covered persons by preserving any applicable privilege a covered person may claim in response to a third party's claim of waiver. Furthermore, in that scenario, the final rule could impose a potential cost on consumers or covered persons involved in subsequent third-party litigation regarding a supervised entity to the extent the rule, as opposed to existing law, prevents them from discovering or using privileged information subject to the rule pursuant to a theory of waiver. The final rule could also benefit consumers, however, by facilitating the Bureau's ability to supervise covered persons and service

[46] *See* Dodd-Frank Act section 1022(c)(6)(A); 12 U.S.C. 5512(c)(6)(A).

[47] *See* Dodd-Frank Act section 1022(b)(1), 12 U.S.C. 5512(b)(1); *see also* Dodd-Frank Act sections 1012(a)(10), 12 U.S.C. 5492(a)(10) (authorizing the Bureau to establish policies with respect to ''implementing the Federal consumer financial laws through rules, orders, guidance, interpretations, statements of policy, examinations, and enforcement actions * * * '').

[48] *See* Dodd-Frank Act section 1021(b)(4), 12 U.S.C. 5511(b)(4); *see also* Dodd-Frank Act section 1021(a), 12 U.S.C. 5511(a).

[49] *See* Dodd-Frank Act section 1024(b)(7)(A), 12 U.S.C. 5514(b)(7)(A). This rulemaking does not concern supervisory requirements or coordinated registration systems for nondepository institutions. Accordingly, the Bureau has determined that consultation with state agencies is not appropriate. *See* Dodd-Frank Act section 1024(b)(7)(D), 12 U.S.C. 5514(b)(7)(D).

[50] Specifically, section 1022(b)(2)(A) calls for the Bureau to consider the potential benefits and costs of a regulation to consumers and covered persons, including the potential reduction of access by consumers to consumer financial products or services; the impact on depository institutions and credit unions with $10 billion or less in total assets as described in section 1026 of the Act; and the impact on consumers in rural areas. The manner and extent to which the provisions of section 1022(b)(2) apply to a rule of this kind that does not establish standards of conduct is unclear. Nevertheless, to inform this rulemaking more fully, the Bureau performed the described analyses and consultations.

[51] Notably, section 1070.48 does not require the submission of information; rather, any requirement to provide information stems from the Bureau's authority under existing law.

providers and thereby detect and prevent risks to consumers.

The Bureau also believes that courts applying the principles of the common law would be unlikely to find a waiver of any applicable privilege in most circumstances in which it will share privileged information with another Federal or State agency. For example, the Bureau believes it unlikely that a court would find a waiver if it were to share its privileged deliberative work product with Federal or State agencies in the context of a coordinated examination or joint investigation. In circumstances in which the rule does result in a determination regarding waiver different than that which would be reached under existing law, section 1070.47(c)'s only effect would be to preserve the confidentiality of privileged information and, therefore, would not impose material costs on consumers or covered persons for the same reasons as set forth above in relation to section 1070.48. Accordingly, section 1070.47(c) is not expected to impose material costs on consumers or covered persons or to impact consumers' access to consumer financial products or services.

Finally, although the final rule would apply to privileged information submitted by depository institutions or credit unions with $10,000,000,000 or less in assets as described in section 1026 of the Dodd-Frank Act, it has no unique impact upon such institutions. Nor does the final rule have a unique impact on rural consumers.

IV. Regulatory Flexibility Act

The Regulatory Flexibility Act (RFA), as amended by the Small Business Regulatory Enforcement Fairness Act of 1996, requires each agency to consider the potential impact of its regulations on small entities, including small businesses, small governmental units, and small not-for-profit organizations.

The RFA generally requires an agency to conduct an initial regulatory flexibility analysis (IRFA) and a final regulatory flexibility analysis (FRFA) of any rule subject to notice-and-comment rulemaking requirements, unless the agency certifies that the rule will not have a significant economic impact on a substantial number of small entities. The Bureau did not perform an IFRA because it determined and certified that the proposed rule, if adopted, would not have a significant economic impact on a substantial number of small entities. The Bureau did not receive any comments regarding its certification, and is adopting the proposed rule without change.

A FRFA is not required for the proposed rule because it will not have a significant economic impact on a substantial number of small entities. The proposed rule does not impose obligations or standards of conduct on any entities. In any event, as noted, the submission by any person of any information to the Bureau in the course of the Bureau's supervisory or regulatory processes or the Bureau's later disclosure of such submitted material generally does not waive or otherwise affect any privilege such person may claim with respect to such information under Federal or State law as to any other person or entity. The final rule is intended to codify this result in order to give further assurance to entities subject to the Bureau's authority. Any requirement to provide information stems from the Bureau's authority under existing law, not the final rule. To the extent that the final rule alters existing law, it protects any applicable privilege under Federal or State law that a covered person that provides information to the Bureau may claim.

Accordingly, the undersigned hereby certifies that the final rule will not have a significant economic impact on a substantial number of small entities.

List of Subjects in 12 CFR Part 1070

Confidential business information, Consumer protection, Privacy.

Authority and Issuance

For the reasons set forth in the preamble, the Bureau amends 12 CFR part 1070, subpart D, as set forth below:

PART 1070—DISCLOSURES OF RECORDS AND INFORMATION

■ 1. The authority citation for part 1070 continues to read as follows:

Authority: 12 U.S.C. 3401; 12 U.S.C. 5481 *et seq.;* 5 U.S.C. 552; 5 U.S.C. 552a; 18 U.S.C. 1905; 18 U.S.C. 641; 44 U.S.C. ch. 30; 5 U.S.C. 301.

Subpart D—Confidential Information

■ 2. Amend § 1070.47 by revising paragraph (c) to read as follows:

§ 1070.47 Other Rules Regarding Disclosure of Confidential Information.

* * * * *

(c) *Non-waiver.* (1) *In general.* The CFPB shall not be deemed to have waived any privilege applicable to any information by transferring that information to, or permitting that information to be used by, any Federal or State agency.

(2) *Rule of construction.* Paragraph (c)(1) of this section shall not be construed as implying that any person waives any privilege applicable to any information because paragraph (c)(1) does not apply to the transfer or use of that information.

■ 3. Add § 1070.48 to read as follows:

§ 1070.48 Privileges not affected by disclosure to the CFPB.

(a) *In general.* The submission by any person of any information to the CFPB for any purpose in the course of any supervisory or regulatory process of the CFPB shall not be construed as waiving, destroying, or otherwise affecting any privilege such person may claim with respect to such information under Federal or State law as to any person or entity other than the CFPB.

(b) *Rule of construction.* Paragraph (a) of this section shall not be construed as implying or establishing that—

(1) Any person waives any privilege applicable to information that is submitted or transferred under circumstances to which paragraph (a) of this section does not apply; or

(2) Any person would waive any privilege applicable to any information by submitting the information to the CFPB but for this section.

Dated: June 26, 2012.

Richard Cordray,

Director, Bureau of Consumer Financial Protection.

[FR Doc. 2012–16247 Filed 7–3–12; 8:45 am]

BILLING CODE 4810–AM–P

DEPARTMENT OF TRANSPORTATION

Federal Aviation Administration

14 CFR Part 33

[Amendment No. 33–33]

Airworthiness Standards: Aircraft Engines; Technical Amendment

AGENCY: Federal Aviation Administration (FAA), DOT.

ACTION: Final rule; technical amendment.

SUMMARY: This amendment clarifies aircraft engine vibration test requirements in the airworthiness standards. The clarification is in response to inquiries from applicants requesting FAA engine type certifications and aftermarket certifications, such as supplemental type certificates, parts manufacturing approvals, and repairs. We are revising the regulations to clarify that ''engine surveys'' require an engine test. The change is not substantive in nature, and will not impose any additional burden on any person.

DATES: This amendment becomes effective July 5, 2012.

FOR FURTHER INFORMATION CONTACT: For technical questions concerning this action, contact Dorina Mihail, Federal Aviation Administration, Engine and Propeller Directorate, Standards Staff, ANE–110, 12 New England Executive Park, Burlington, Massachusetts 01803–5229; (781) 238–7153; facsimile: (781) 238–7199; email: *dorina.mihail@faa.gov*.

For legal questions concerning this action, contact Vincent Bennett, Federal Aviation Administration, Office of Regional Counsel, ANE–7, 12 New England Executive Park, Burlington, Massachusetts 01803–5299; telephone (781) 238–7044; fax (781) 238–7055; email *vincent.bennett@faa.gov*.

SUPPLEMENTARY INFORMATION:

Background

The airworthiness standards in § 33.83 refer to engine surveys, vibration surveys, vibration test, or simply surveys with the intent to prescribe engine vibration surveys conducted by the means of an engine test. This intent has been applied since the regulation was first issued in 1964 and is common certification practice. However, FAA continues to receive requests for clarification in regard to the ''engine surveys'' required in the second sentence of § 33.83(a). The requested clarification was whether an ''appropriate combination of experience, analysis, and component test'' is acceptable in lieu of an engine test. We are revising § 33.83(a) to clarify that the applicants must conduct the engine surveys by the means of an engine test, and that the applicants may use an ''appropriate combination of experience, analysis, and component test'' in support of conducting the engine test. This clarification is not substantive in nature, and will not impose any additional burden on any person.

List of Subjects in 14 CFR Part 33

Aircraft, Aviation safety.

The Amendment

In consideration of the following, the Federal Aviation Administration amends part 33 of Title 14, Code of Federal Regulations, as follows:

PART 33—AIRWORTHINESS STANDARDS: AIRCRAFT ENGINES

■ 1. The authority citation for part 33 continues to read as follows:

Authority: 49 U.S.C. 106(g), 40113, 44701–44702, 44704.

■ 2. Revise § 33.83(a) to read as follows:

§ 33.83 Vibration test.

(a) Each engine must undergo vibration surveys to establish that the vibration characteristics of those components that may be subject to mechanically or aerodynamically induced vibratory excitations are acceptable throughout the declared flight envelope. Compliance with this section must be demonstrated by engine test, and must address, as a minimum, blades, vanes, rotor discs, spacers, and rotor shafts. The conduct of the engine test should be based on an appropriate combination of experience, analysis, and component test.

* * * * *

Issued in Washington, DC, on June 7, 2012.

Lirio Liu,

Acting Director, Office of Rulemaking.

[FR Doc. 2012–16290 Filed 7–3–12; 8:45 am]

BILLING CODE 4910–13–P

DEPARTMENT OF TRANSPORTATION

Federal Aviation Administration

14 CFR Part 39

[Docket No. FAA–2012–0416; Directorate Identifier 2012–NE–13–AD; Amendment 39–17078; AD 2012–11–14]

RIN 2120–AA64

Airworthiness Directives; Pratt & Whitney Canada Turboprop Engines

AGENCY: Federal Aviation Administration (FAA), DOT.

ACTION: Final rule; request for comments.

SUMMARY: We are adopting a new airworthiness directive (AD) for all Pratt & Whitney Canada (P&WC) PW118, PW118A, PW118B, PW119B, PW119C, PW120, PW120A, PW121, PW121A, PW123, PW123B, PW123C, PW123D, PW123E, PW123AF, PW124B, PW125B, PW126A, PW127, PW127E, PW127F, PW127G, and PW127M turboprop engines. This AD requires initial and repetitive inspections of certain serial numbers (S/Ns) of propeller shafts for cracks and removal from service if found cracked. This AD was prompted by reports of two propeller shafts found cracked at time of inspection during maintenance. We are issuing this AD to detect propeller shaft cracks, which could cause failure of the shaft, propeller release, and loss of control of the airplane.

DATES: This AD becomes effective July 20, 2012.

We must receive comments on this AD by August 20, 2012.

The Director of the Federal Register approved the incorporation by reference of P&WC Alert Service Bulletin (ASB) No. PW100–72–A21813, Revision 3, dated March 21, 2012, ASB No. PW100–72–A21802, Revision 4, dated March 16, 2012, and Special Instruction P&WC 22–2012R2, dated April 4, 2012, listed in the AD as of July 20, 2012.

ADDRESSES: You may send comments by any of the following methods:

- *Federal eRulemaking Portal:* Go to *http://www.regulations.gov* and follow the instructions for sending your comments electronically.
- *Mail:* U.S. Department of Transportation, 1200 New Jersey Avenue SE., West Building Ground Floor, Room W12–140, Washington, DC 20590–0001.
- *Hand Delivery:* Deliver to Mail address above between 9 a.m. and 5 p.m., Monday through Friday, except Federal holidays.
- *Fax:* 202–493–2251.

For service information identified in this AD, contact Pratt & Whitney Canada Corp., 1000 Marie-Victorin, Longueuil, Quebec, Canada, J4G 1A1; phone 800–268–8000; fax 450–647–2888; Web site: *www.pwc.ca.* You may review copies of the referenced service information at the FAA, Engine & Propeller Directorate, 12 New England Executive Park, Burlington, MA 01803. For information on the availability of this material at the FAA, call 781–238–7125.

Examining the AD Docket

You may examine the AD docket on the Internet at *http://www.regulations.gov;* or in person at the Docket Operations office between 9 a.m. and 5 p.m., Monday through Friday, except Federal holidays. The AD docket contains this AD, the regulatory evaluation, any comments received, and other information. The street address for the Docket Operations office (phone: 800–647–5527) is the same as the Mail address provided in the **ADDRESSES** section. Comments will be available in the AD docket shortly after receipt.

FOR FURTHER INFORMATION CONTACT: James Lawrence, Aerospace Engineer, Engine Certification Office, FAA, Engine & Propeller Directorate, 12 New England Executive Park, Burlington, MA 01803; email: *james.lawrence@faa.gov;* phone: 781–238–7176; fax: 781–238–7199.

SUPPLEMENTARY INFORMATION:

Discussion

Transport Canada, which is the aviation authority for Canada, has issued Canada AD CF–2012–12, dated March 26, 2012 (referred to after this as ''the MCAI''), to correct an unsafe

condition for the specified products. The MCAI states:

Two PW100 propeller shafts were discovered with cracks during troubleshooting for oil leakage in the propeller shaft area. The subsequent investigation has determined that the crack initiation resulted from a plating repair not performed in accordance with the current published Pratt & Whitney Canada (P&WC) Cleaning Inspection and Repair (CIR) Manual. Both propeller shafts that were found with a circumferential crack had been processed consecutively for nickel plating repair at the same repair facility.

P&WC had initially identified 24 high-risk propeller shafts that were repaired by the same facility and accordingly, issued Service Bulletin (SB) No. A21802 in May 2011 to remove those 24 units from service. Nineteen of those units were removed and the remaining 5 are confirmed to not be installed on any serviceable aircraft. Further investigation by P&WC indicated that the lack of full conformity with the CIR procedure may not have been limited to one vendor only. As a result P&WC identified a total of 203 (24 + 179) suspect units that may not have been repaired in accordance with CIR procedures.

This AD addresses the entire 203 article population. P&WC has issued service information to address all of the affected propeller shafts, since the first two cracked propeller shafts were discovered.

You may obtain further information by examining the MCAI in the AD docket.

Relevant Service Information

P&WC has issued ASB No. PW100–72–A21813, Revision 3, dated March 21, 2012 and ASB No. PW100–72–A21802, Revision 4, dated March 16, 2012. These ASBs provide instructions on replacing the affected propeller shafts that are identified by S/N in the ASBs. P&WC has also issued Special Instruction P&WC 22–2012R2, dated April 4, 2012, which provides instructions on performing ultrasonic inspections to the affected propeller shafts. The actions described in that service information are intended to correct the unsafe condition identified in the MCAI.

FAA's Determination and Requirements of This AD

This product has been approved by the aviation authority of Canada, and is approved for operation in the United States. Pursuant to our bilateral agreement with Canada, they have notified us of the unsafe condition described in the MCAI and service information referenced above. We are issuing this AD because we evaluated all information provided by Canada and determined the unsafe condition exists and is likely to exist or develop on other products of the same type design.

This AD requires within 30 days after the effective date of the AD, removing from service propeller shafts with a S/N listed in Table 1 of P&WC ASB No. PW100–72–A21802, Revision 4, dated March 16, 2012. These propeller shafts are the highest-risk propeller shafts.

This AD also requires within 200 engine flight hours (EFH) or 40 days, whichever occurs first after the effective date of this AD, performing an initial, and repetitive visual inspections or ultrasonic inspections of propeller shafts with a S/N listed in Table 1 or Table 2 of P&WC ASB No. PW100–72–A21813, Revision 3, dated March 21, 2012. These propeller shafts are not as high a risk.

FAA's Determination of the Effective Date

An unsafe condition exists that requires the immediate adoption of this AD. The FAA has found that the risk to the flying public justifies waiving notice and comment prior to adoption of this rule because the compliance requirements are within 30 days or less, depending on airplane usage. Therefore, we determined that notice and opportunity for public comment before issuing this AD are impracticable and that good cause exists for making this amendment effective in fewer than 30 days.

Comments Invited

This AD is a final rule that involves requirements affecting flight safety, and we did not precede it by notice and opportunity for public comment. We invite you to send any written relevant data, views, or arguments about this AD. Send your comments to an address listed under the **ADDRESSES** section. Include ''Docket No. FAA–2012–0416; Directorate Identifier 2012–NE–13–AD'' at the beginning of your comments. We specifically invite comments on the overall regulatory, economic, environmental, and energy aspects of this AD. We will consider all comments received by the closing date and may amend this AD because of those comments.

We will post all comments we receive, without change, to *http://www.regulations.gov,* including any personal information you provide. We will also post a report summarizing each substantive verbal contact with FAA personnel concerning this AD. Using the search function of the Web site, anyone can find and read the comments in any of our dockets, including, if provided, the name of the individual who sent the comment (or signed the comment on behalf of an association, business, labor union, etc.). You may review the DOT's complete Privacy Act Statement in the **Federal Register** published on April 11, 2000 (65 FR 19477–78).

Authority for This Rulemaking

Title 49 of the United States Code specifies the FAA's authority to issue rules on aviation safety. Subtitle I, section 106, describes the authority of the FAA Administrator. ''Subtitle VII: Aviation Programs,'' describes in more detail the scope of the Agency's authority.

We are issuing this rulemaking under the authority described in ''Subtitle VII, Part A, Subpart III, Section 44701: General requirements.'' Under that section, Congress charges the FAA with promoting safe flight of civil aircraft in air commerce by prescribing regulations for practices, methods, and procedures the Administrator finds necessary for safety in air commerce. This regulation is within the scope of that authority because it addresses an unsafe condition that is likely to exist or develop on products identified in this rulemaking action.

Differences Between the MCAI and This AD

The PW126, PW127B, PW127H, and PW127J model engines listed in the MCAI are not included in this AD because they are not subject to FAA oversight.

The MCAI requires retirement of all subject propeller shafts within 12 months. This AD does not. However, that requirement may be added at a later date as required terminating action.

Regulatory Findings

We determined that this AD will not have federalism implications under Executive Order 13132. This AD will not have a substantial direct effect on the States, on the relationship between the national government and the States, or on the distribution of power and responsibilities among the various levels of government.

For the reasons discussed above, I certify this AD:

1. Is not a ''significant regulatory action'' under Executive Order 12866;

2. Is not a ''significant rule'' under the DOT Regulatory Policies and Procedures (44 FR 11034, February 26, 1979); and

3. Will not have a significant economic impact, positive or negative, on a substantial number of small entities under the criteria of the Regulatory Flexibility Act.

We prepared a regulatory evaluation of the estimated costs to comply with this AD and placed it in the AD docket.

List of Subjects in 14 CFR Part 39

Air transportation, Aircraft, Aviation safety, Incorporation by reference, Safety.

Adoption of the Amendment

Accordingly, under the authority delegated to me by the Administrator, the FAA amends 14 CFR part 39 as follows:

PART 39—AIRWORTHINESS DIRECTIVES

■ 1. The authority citation for part 39 continues to read as follows:

Authority: 49 U.S.C. 106(g), 40113, 44701.

§ 39.13 [Amended]

■ 2. The FAA amends § 39.13 by adding the following new AD:

2012–11–14 Pratt & Whitney Canada: Amendment 39–17078; Docket No. FAA–2012–0416; Directorate Identifier 2012–NE–13–AD.

(a) Effective Date

This airworthiness directive (AD) becomes effective July 20, 2012.

(b) Affected ADs

None.

(c) Applicability

This AD applies to all Pratt & Whitney Canada (P&WC) PW118, PW118A, PW118B, PW119B, PW119C, PW120, PW120A, PW121, PW121A, PW123, PW123B, PW123C, PW123D, PW123E, PW123AF, PW124B, PW125B, PW126A, PW127, PW127E, PW127F, PW127G, and PW127M turboprop engines, with the serial number (S/N) propeller shafts listed in P&WC Alert Service Bulletin (ASB) No. PW100–72–A21813, Revision 3, dated March 21, 2012, and ASB No. PW100–72–A21802, Revision 4, dated March 16, 2012.

(d) Reason

This AD was prompted by reports of two propeller shafts found cracked at time of inspection during maintenance. We are issuing this AD to detect propeller shaft cracks, which could cause failure of the shaft, propeller release, and loss of control of the airplane.

(e) Actions and Compliance

Unless already done, do the following actions.

(f) Inspecting and Removing Propeller Shafts

(1) Within 30 days after the effective date of this AD, remove from service propeller shafts with an S/N listed in Table 1 of P&WC ASB No. PW100–72–A21802, Revision 4, dated March 16, 2012.

(2) For propeller shafts with a S/N listed in Table 1 or Table 2 of P&WC ASB No. PW100–72–A21813, Revision 3, dated March 21, 2012:

(i) Within 200 engine flight hours (EFH) or 40 days, whichever occurs first after the effective date of this AD, perform either an initial visual inspection or an initial ultrasonic inspection (UI) for cracks, in accordance with paragraphs 3.C.(1) through 3.C.(1)(a), and 3.C.(2) of P&WC ASB No. PW100–72–A21813, Revision 3, dated March 21, 2012, and Section 9 of P&WC Special Instruction (SI) P&WC 22–2012R2, dated April 4, 2012.

(ii) If the visual inspection was performed, repeat the visual inspection within 50 EFH after the initial inspection, and thereafter every 10 EFH, until the propeller shaft is removed from service.

(iii) If the UI was performed, repeat the UI at intervals not to exceed 1,000 EFH, until the propeller shaft is removed from service.

(3) If a crack is found during any of the inspections required by this AD, remove the propeller shaft from service before the next flight.

(g) Installation Prohibition

After the effective date of this AD, do not install any propeller shaft S/Ns listed in Table 1 of P&WC ASB No. PW100–72–A21802, Revision 4, dated March 16, 2012, into any engine.

(h) Alternative Methods of Compliance (AMOCs)

The Manager, Engine Certification Office, may approve AMOCs for this AD. Use the procedures found in 14 CFR 39.19 to make your request.

(i) Special Flight Permit

No special flight permits will be issued for this AD.

(j) Related Information

(1) For more information about this AD, contact James Lawrence, Aerospace Engineer, Engine Certification Office, FAA, Engine & Propeller Directorate, 12 New England Executive Park, Burlington, MA 01803; email: *james.lawrence@faa.gov;* phone 781–238–7176; fax 781–238–7199.

(2) Refer to Transport Canada AD CF–2012–12, dated March 26, 2012, for related information.

(k) Material Incorporated by Reference

(1) The Director of the **Federal Register** approved the incorporation by reference (IBR) of the following service information under 5 U.S.C. 552(a) and 1 CFR part 51.

(2) You must use the following service information to do the actions required by this AD, unless the AD specifies otherwise.

(i) Pratt & Whitney Canada Alert Service Bulletin No. PW100–72–A21813, Revision 3, dated March 21, 2012.

(ii) Pratt & Whitney Canada Alert Service Bulletin No. PW100–72–A21802, Revision 4, dated March 16, 2012.

(iii) Pratt & Whitney Canada Special Instruction P&WC 22–2012R2, dated April 4, 2012.

(3) For service information identified in this AD, contact Pratt & Whitney Canada Corp., 1000 Marie-Victorin, Longueuil, Quebec, Canada, J4G 1A1; phone 800–268–8000; fax 450–647–2888; Web site: *www.pwc.ca.*

(4) You may review copies of the service information at the FAA, Engine & Propeller Directorate, 12 New England Executive Park, Burlington, MA. For information on the availability of this material at the FAA, call 781–238–7125.

(5) You may also review copies of the service information incorporated by reference at the National Archives and Records Administration (NARA). For information on the availability of this material at NARA, call 202–741–6030, or go to: *http://www.archives.gov/federal-register/cfr/ibr-locations.html.*

Issued in Burlington, Massachusetts, on May 31, 2012.

Peter A. White,

Manager, Engine & Propeller Directorate, Aircraft Certification Service.

[FR Doc. 2012–16257 Filed 7–3–12; 8:45 am]

BILLING CODE 4910–13–P

COMMODITY FUTURES TRADING COMMISSION

17 CFR Part 1

RIN 3038–AD06

SECURITIES AND EXCHANGE COMMISSION

17 CFR Part 240

[Release No. 34–66868A; File No. S7–39–10]

RIN 3235–AK65

Further Definition of ''Swap Dealer,'' ''Security-Based Swap Dealer,'' ''Major Swap Participant,'' ''Major Security-Based Swap Participant'' and ''Eligible Contract Participant''; Correction

AGENCY: Commodity Futures Trading Commission; Securities and Exchange Commission.

ACTION: Joint final rule; joint interim final rule; interpretations; correction.

SUMMARY: The Commodity Futures Trading Commission and Securities and Exchange Commission are correcting final rules that appeared in the **Federal Register** of May 23, 2012 (77 FR 30596). The rules further defined the terms ''swap dealer,'' ''security-based swap dealer,'' ''major swap participant,'' ''major security-based swap participant'' and ''eligible contract participant.'' Only the rules of the Commodity Futures Trading Commission are subject to this correction. This document also corrects a footnote in the Supplementary Information accompanying the final rules.

DATES: Effective July 23, 2012.

FOR FURTHER INFORMATION CONTACT:

CFTC: Jeffrey P. Burns, Assistant General Counsel, at 202–418–5101, *jburns@cftc.gov,* Mark Fajfar, Assistant

General Counsel, at 202–418–6636, *mfajfar@cftc.gov,* Julian E. Hammar, Assistant General Counsel, at 202–418–5118, *jhammar@cftc.gov,* or David E. Aron, Counsel, at 202–418–6621, *daron@cftc.gov,* Office of General Counsel; Gary Barnett, Director, at 202–418–5977, *gbarnett@cftc.gov,* or Frank Fisanich, Deputy Director, at 202–418–5949, *ffisanich@cftc.gov,* Division of Swap Dealer and Intermediary Oversight, Commodity Futures Trading Commission, Three Lafayette Centre, 1155 21st Street NW., Washington, DC 20581;

SEC: Joshua Kans, Senior Special Counsel, Richard Grant, Special Counsel, or Richard Gabbert, Attorney Advisor, at 202–551–5550, Division of Trading and Markets, Securities and Exchange Commission, 100 F Street NE., Washington, DC 20549–7010.

SUPPLEMENTARY INFORMATION: In FR Doc. 2012–10562 appearing on page 30596 in the **Federal Register** of Wednesday, May 23, 2012, the following corrections are made.

■ 1. On page 30685, in the third column, in footnote 1094, the words ''CFTC Regulation § 1.3(mmm)(2);'' are removed.

§ 1.3 [Corrected]

■ 2. On page 30745, in the second column, correct paragraph (ggg)(4)(ii)(D) to read as follows:

§ 1.3 Definitions.

* * * * *

(ggg) * * *

(4) * * *

(ii) * * *

(D) If the phase-in termination date has not been previously established pursuant to paragraph (ggg)(4)(ii)(C) of this section, then in any event the phase-in termination date shall occur five years after the date that a swap data repository first receives swap data in accordance with part 45 of this chapter.

* * * * *

■ 3. On page 30747, in the third column, correct paragraph (hhh)(6)(iii)(B)(*2*) to read as follows:

§ 1.3 Definitions.

* * * * *

(hhh) * * *

(6) * * *

(iii) * * *

(B) * * *

(*2*) The sum of the amount calculated under paragraph (hhh)(6)(iii)(B)(*1*) of this section and the product of the total effective notional principal amount of the person's swap positions in all major swap categories multiplied by 0.15 is less than $1 billion.

* * * * *

■ 4. On page 30749, in the third column, correct paragraph (jjj)(3)(iii)(A) to read as follows:

§ 1.3 Definitions.

* * * * *

(jjj) * * *

(3) * * *

(iii) * * *

(A) Potential outward exposure equals the potential exposure that would be attributed to such positions using the procedures in paragraph (jjj)(3)(ii) of this section multiplied by:

(*1*) 0.1, in the case of positions cleared by a registered or exempt clearing agency or derivatives clearing organization; or

(*2*) 0.2, in the case of positions that are subject to daily mark-to-market margining but that are not cleared by a registered or exempt clearing agency or derivatives clearing organization.

* * * * *

Dated: June 29, 2012.

Commodity Futures Trading Commission.

David A. Stawick,

Secretary.

Dated: June 29, 2012.

Securities and Exchange Commission.

Elizabeth M. Murphy,

Secretary.

[FR Doc. 2012–16409 Filed 7–3–12; 8:45 am]

BILLING CODE 8011–01–P; 6351–01–P

DEPARTMENT OF DEFENSE

Office of the Secretary

32 CFR Part 239

[DOD–2009–OS–0090; RIN 0790–AI83]

Homeowners Assistance Program—Application Processing

AGENCY: Under Secretary of Defense for Acquisition, Technology, and Logistics, Office of the Deputy Under Secretary of Defense (Installations and Environment), DoD.

ACTION: Direct final rule.

SUMMARY: This direct final rule makes non-substantive changes to the Expanded Homeowners Assistance Program (HAP) rule. The Expanded HAP, authorized in the American Recovery and Reinvestment Act for 2009 (''the Act''), provided much needed assistance to military and civilian employees, and spouses of military members who died in the line of duty. However, the Expanded HAP eligibility criteria established in the Act, including those criteria that were subsequently changed through administrative rulemaking procedures, did not establish a deadline for when applications must be submitted to DoD. These changes inform applicants of application deadlines and the current field office address for submitting applications. These changes do not impact the eligibility criteria or other policies and procedures prescribed in the rule.

DATES: This direct final rule is effective September 4, 2012 unless Agency receives significant adverse comments by midnight Eastern Standard Time on August 6, 2012.

FOR FURTHER INFORMATION CONTACT: Phyllis Newton, 703–571–9060.

SUPPLEMENTARY INFORMATION: Due to funding limitations, in the Expanded HAP Final Rule, the Permanent Change of Station (PCS) eligibility criterion date for when PCS orders needed to be issued was changed from September 30, 2012, to September 30, 2010, but the Final Rule retained the September 30, 2012, date for when the house must be sold. In accordance with the Act, the Base Realignment and Closure (BRAC) 2005 eligibility criterion will terminate on September 30, 2012, a full year after implementation of the BRAC 2005 round. It is appropriate to establish application deadlines for Expanded HAP benefits for the PCS and BRAC 2005 categories. To that end, this rule will amend 32 CFR part 239 by adding two paragraphs to Section 239.9(a) to establish the application deadlines. This change does not eliminate anyone's eligibility; rather it simply requires filing of applications in a timely manner. Submission of the applications by the specified deadlines is sufficient even if further documentation is required.

Additionally, the amendment will revise the HAP Field Office address for the submission of HAP applications. The three former field offices were consolidated into one field office in Savannah, Georgia.

The prompt implementation of the Direct Final Rule is of critical importance. Due to the current economic climate, continuing the Expanded HAP provisions for PCS and BRAC 2005 categories is no longer viable. This Direct Final Rule makes nonsubstantive changes to the Expanded HAP rule. These changes inform applicants of application deadlines and the current field office address for submitting applications. These changes do not impact the eligibility criteria or other policies and procedures prescribed in the rule.

Additionally, the Department of Defense has determined that these

changes to the final rule are exempt from public comment as the application deadline is the same as the program termination deadline for the Expanded HAP that was previously established and codified in the final rule and the change of address for the field office is an administrative change.

Direct Final Rule and Significant Adverse Comments

DoD has determined this rulemaking meets the criteria for a direct final rule because it involves nonsubstantive changes dealing with DoD's management of its Expanded HAP. DoD expects no opposition to the changes and no significant adverse comments. However, if DoD receives a significant adverse comment, the Department will withdraw this direct final rule by publishing a notice in the **Federal Register**. A significant adverse comment is one that explains: (1) Why the direct final rule is inappropriate; or (2) why the direct final rule will be ineffective or unacceptable without a change. A significant adverse comment is not a comment that addresses the order of application processing, the ten percent home value loss, and the date of home purchase. In determining whether a comment necessitates withdrawal of this direct final rule, DoD will consider whether it warrants a substantive response in a notice and comment process.

Executive Summary

I. Purpose of the Regulatory Action

a. The Expanded Homeowners Assistance Program (HAP), authorized in the American Recovery and Reinvestment Act of 2009 (''the Act''), provided much needed assistance to military and civilian employees, and spouses of military members who died in the line of duty. However, the Expanded HAP eligibility criteria established in the Act, including those criteria that were subsequently changed through administrative rulemaking procedures, did not establish a deadline for when applications must be submitted to DoD. Based on reductions in the Defense budget in Fiscal Year 2012 and beyond, continuing the Expanded HAP provisions for Permanent Change of Station (PCS) and Base Realignment and Closure (BRAC) 2005 categories is no longer viable. In the Expanded HAP Final Rule, the PCS eligibility criterion date was changed from September 30, 2012, to September 30, 2010, due to funding limitations. However, the Department continues to receive more than 100 eligible applications per month for the PCS category. Per the Act, the BRAC 2005 eligibility criterion will terminate on September 30, 2012, a full year after the statutory completion of the BRAC 2005 round. It is now time to establish application deadlines for Expanded HAP benefits for the PCS and BRAC 2005 categories. To that end, this rule will amend 32 CFR part 239 by adding two paragraphs to Section 239.9(a) to establish the application deadlines.

b. 42 United States Code, Section 3374, as amended.

II. Summary of the Major Provisions of the Regulatory Action in Question

The HAP Rule, Section 239.9(a) will be amended to add application deadlines for the submission of PCS and BRAC 2005 benefits. This change does not eliminate anyone's eligibility; rather it simply requires filing of applications in a timely manner. Submission of the applications by the specified deadlines is sufficient even if further documentation is required. Additionally, the amendment will revise the HAP Field Office address for the submission of HAP applications. The three former field offices were consolidated into one field office in Savannah, Georgia.

III. Costs and Benefits

There is no cost to the public. The Department of Defense administrative costs for implementation of the authorities under this rule are eight (8) percent of the funds appropriated to execute the Expanded HAP. Workload will be accomplished with additional staffing and be integrated into normal business.

Regulatory Procedures

Executive Order 12866, ''Regulatory Planning and Review'' and Executive Order 13563, ''Improving Regulation and Regulatory Review''

It has been determined that this rule is a significant regulatory action.

This rule does not:

(1) Have an annual effect on the economy of $100 million or more, or adversely affect in a material way the economy, a sector of the economy, productivity, competition, jobs, the environment, public health or safety, or State, local or tribal governments or communities; (2) Create a serious inconsistency or otherwise interfere with an action taken or planned by another agency; or

(3) Raise novel legal or policy issues arising out of legal mandates, the President's priorities, or the principles set forth in these Executive Orders.

This rule does:

Materially alter the budgetary impact of entitlements, grants, user fees, or loan programs, or the rights and obligations of recipients thereof.

OMB has reviewed this rule.

Sec. 202, Pub. L. 104–4, ''Unfunded Mandates Reform Act''

It has been certified that 32 CFR part 239 does not contain a Federal mandate that may result in expenditure by State, local and tribal governments, in aggregate, or by the private sector, of $100 million or more in any one year.

Public Law 96–354, ''Regulatory Flexibility Act'' (5 U.S.C. 601)

It has been certified that 32 CFR part 239 is not subject to the Regulatory Flexibility Act (5 U.S.C. 601) because it would not, if promulgated, have a significant economic impact on a substantial number of small entities.

Public Law 96–511, ''Paperwork Reduction Act'' (44 U.S.C. Chapter 35)

It has been certified that this rule does impose additional reporting or recordkeeping requirements under the Paperwork Reduction Act of 1995. The HAP Application is approved under OMB Control Number 0704–0463.

Executive Order 13132, ''Federalism''

It has been certified that 32 CFR part 239 does not have federalism implications, as set forth in Executive Order 13132. This rule does not have substantial direct effects on:

(1) The States;

(2) The relationship between the National Government and the States; or

(3) The distribution of power and responsibilities among the various levels of Government.

List of Subjects in 32 CFR Part 239

Government employees; Grant programs—housing and community development; Housing; Military personnel.

Accordingly, 32 CFR part 239 is amended as follows:

PART 239—[AMENDED]

■ 1. The authority citation for part 239 continues to read as follows:

Authority: 42 U.S.C. 3374, as amended.

■ 2. Section 239.9 is amended by adding paragraphs (a)(1) and (2) to read as follows:

§ 239.9. Application processing procedures.

(a) * * *

(1) Applications for benefits by members of the Armed Forces due to eligibility pursuant to § 239.6(a)(4) of

this part because of permanent reassignment must be submitted directly to the U.S. Army Corps of Engineers field office identified in § 239.15 of this part by U.S. Mail or commercial delivery service, and must be postmarked or deposited with the commercial delivery service no later than September 30, 2012. Applications postmarked or deposited after September 30, 2012, will not be accepted.

(2) Applications of eligible personnel for benefits due to eligibility pursuant to § 239.6(a)(3) of this part because of BRAC 2005 must be submitted directly to the U.S. Army Corps of Engineers field office identified in § 239.15 of this part by U.S. Mail or commercial delivery service, and must be postmarked or deposited with the commercial delivery service no later than September 30, 2012. Applications postmarked or deposited after September 30, 2012, will not be accepted.

* * * * *

■ 3. Section 239.15 is revised to read as follows:

§ 239.15. List of HAP Field Offices.

HAP FIELD OFFICE

U.S. Army Engineer District, Savannah, Corps of Engineers, Attn: CESAS–RE–HM, 100 West Oglethorpe Avenue, Savannah, Georgia 31401–3604, 1–800–861–8144, Internet Address: *http://www.sas.usace.army.mil*.

HAP CENTRAL OFFICE

Homeowners Assistance Program, HQ U.S. Army Corps of Engineers Real Estate Directorate, Military Division, 441 G Street NW., Washington, DC 20314–1000.

Dated: June 29, 2012.

Patricia L. Toppings,

OSD Federal Register Liaison Officer, Department of Defense.

[FR Doc. 2012–16420 Filed 7–3–12; 8:45 am]

BILLING CODE 5001–06–P

DEPARTMENT OF DEFENSE

Department of the Navy

32 CFR Part 706

Certifications and Exemptions Under the International Regulations for Preventing Collisions at Sea, 1972

AGENCY: Department of the Navy, DoD.

ACTION: Final rule.

SUMMARY: The Department of the Navy (DoN) is amending its certifications and exemptions under the International Regulations for Preventing Collisions at Sea, 1972 (72 COLREGS), to reflect that the Deputy Assistant Judge Advocate General (DAJAG) (Admiralty and Maritime Law) of the DoN has determined that USS HARRY S. TRUMAN (CVN 75) is a vessel of the Navy which, due to its special construction and purpose, cannot comply fully with certain provisions of the 72 COLREGS without interfering with its special function as a naval ship. The intended effect of this rule is to warn mariners in waters where 72 COLREGS apply.

DATES: This rule is effective July 5, 2012 and is applicable beginning June 25, 2012.

FOR FURTHER INFORMATION CONTACT: Lieutenant Jocelyn Loftus-Williams, JAGC, U.S. Navy, Admiralty Attorney, (Admiralty and Maritime Law), Office of the Judge Advocate General, Department of the Navy, 1322 Patterson Ave. SE., Suite 3000, Washington Navy Yard, DC 20374–5066, telephone number: 202–685–5040.

SUPPLEMENTARY INFORMATION: Pursuant to the authority granted in 33 U.S.C. 1605, the DoN amends 32 CFR part 706.

This amendment provides notice that the DAJAG (Admiralty and Maritime Law) of the DoN, under authority delegated by the Secretary of the Navy, has certified that USS HARRY S. TRUMAN is a vessel of the Navy which, due to its special construction and purpose, cannot comply fully with the following specific provisions of 72 COLREGS without interfering with its special function as a naval ship: Annex I, paragraph 3(a), pertaining to the placement of the forward masthead light in the forward quarter of the ship; Annex I, paragraph 2(g), pertaining to the placement of the sidelights above the hull; and Annex I, paragraph 2(i)(iii), pertaining to the vertical line spacing of the task lights. The DAJAG (Admiralty and Maritime Law) has also certified that the lights involved are located in closest possible compliance with the applicable 72 COLREGS requirements.

Moreover, it has been determined, in accordance with 32 CFR parts 296 and 701, that publication of this amendment for public comment prior to adoption is impracticable, unnecessary, and contrary to public interest since it is based on technical findings that the placement of lights on this vessel in a manner differently from that prescribed herein will adversely affect the vessel's ability to perform its military functions.

List of Subjects in 32 CFR Part 706

Marine safety, Navigation (water), and Vessels.

For the reasons set forth in the preamble, amend part 706 of title 32 of the CFR as follows:

PART 706—CERTIFICATIONS AND EXEMPTIONS UNDER THE INTERNATIONAL REGULATIONS FOR PREVENTING COLLISIONS AT SEA, 1972

■ 1. The authority citation for part 706 continues to read:

Authority: 33 U.S.C. 1605.

■ 2. Section 706.2 is amended as follows:

■ A. In Table Two by revising the entry for USS HARRY S. TRUMAN (CVN 75);

■ B. In Table Four, paragraph 22, by adding, in alpha numerical order, the following entry for USS HARRY S. TRUMAN (CVN 75); and

■ C. In Table Five by revising the entry for USS HARRY S. TRUMAN (CVN 75).

§ 706.2 Certifications of the Secretary of the Navy under Executive Order 11964 and 33 U.S.C. 1605.

* * * * *

TABLE TWO

Vessel	Number	Masthead lights, distance to stbd of keel in meters; Rule 21(a)	Forward anchor light, distance below flight dk in meters; § 2(K), Annex I	Forward anchor light, number of; Rule 30(a)(i)	AFT anchor light, distance below flight dk in meters; Rule 21(e), Rule 30(a)(ii)	AFT anchor light, number of; Rule 30(a)(ii)	Side lights, distance below flight dk in meters; § 2(g), Annex I	Side lights, distance forward of forward masthead light in meters; § 3(b), Annex I	Side lights, distance inboard of ship's sides in meters; § 3(b), Annex I
*	*		*	*	*		*	*	
USS HARRY S. TRUMAN	CVN 75	30.02	.....	1	.....	1	0.46	.....	.....

TABLE TWO—Continued

Vessel	Number	Masthead lights, distance to stbd of keel in meters; Rule 21(a)	Forward anchor light, distance below flight dk in meters; § 2(K), Annex I	Forward anchor light, number of; Rule 30(a)(i)	AFT anchor light, distance below flight dk in meters; Rule 21(e), Rule 30(a)(ii)	AFT anchor light, number of; Rule 30(a)(ii)	Side lights, distance below flight dk in meters; § 2(g), Annex I	Side lights, distance forward of forward masthead light in meters; § 3(b), Annex I	Side lights, distance inboard of ship's sides in meters; § 3(b), Annex I
*	*	*	*	*	*	*			

TABLE FOUR

*	*	*	*	*	*	*

22. * * *

Vessel	Number	Vertical separation of the task light array is not equally spaced, the separation between the middle and lower task light exceed the separation between the upper and middle light by
USS HARRY S. TRUMAN	CVN 75	0.18 meter
*	*	*	*	*	*	*

* * * * *

TABLE FIVE

Vessel	Number	Masthead lights not over all other lights and obstructions. annex I, sec. 2(f)	Forward masthead light not in forward quarter of ship. annex I, sec. 3(a)	After masthead light less than ½ ship's length aft of forward masthead light. annex I, sec. 3(a)	Percentage horizontal separation attained
*	*	*	*	*	*
USS HARRY S. TRUMAN	CVN 75	.....	X	.....	.....
*	*	*	*	*	*

C.J. Spain,

Deputy Assistant Judge Advocate, General (Admiralty and Maritime Law), Acting.

Dated: June 26, 2012.

L.R. Almand,

Judge Advocate General's Corps, U.S. Navy, Alternate Federal Register Liaison Officer.

[FR Doc. 2012–16324 Filed 7–3–12; 8:45 am]

BILLING CODE 3810–FF–P

DEPARTMENT OF HOMELAND SECURITY

Coast Guard

33 CFR Part 100

[Docket Number USCG–2012–0276]

RIN 1625–AA08

Special Local Regulations for Marine Events; Potomac River, National Harbor Access Channel, MD

AGENCY: Coast Guard, DHS.

ACTION: Temporary final rule.

SUMMARY: The Coast Guard is establishing special local regulations during the swim segment of the ''Swim Across the Potomac River'' swimming competition, to be held on the waters of the Potomac River on July 8, 2012. These special local regulations are necessary to provide for the safety of life on navigable waters during the event. This action is intended to temporarily restrict vessel traffic in a portion of the Potomac River and National Harbor Access Channel during the event.

DATES: This rule is effective on July 8, 2012.

ADDRESSES: Documents mentioned in this preamble are part of docket [USCG–2012–0276]. To view documents mentioned in this preamble as being available in the docket, go to *http://www.regulations.gov,* type the docket number in the ''SEARCH'' box and click ''SEARCH.'' Click on Open Docket Folder on the line associated with this rulemaking. You may also visit the Docket Management Facility in Room W12–140 on the ground floor of the Department of Transportation West Building, 1200 New Jersey Avenue SE., Washington, DC 20590, between 9 a.m. and 5 p.m., Monday through Friday, except Federal holidays.

FOR FURTHER INFORMATION CONTACT: If you have questions on this rule, call or email Mr. Ronald Houck, Sector Baltimore Waterways Management Division, U.S. Coast Guard; telephone 410–576–2674, email *Ronald.L.Houck@uscg.mil.* If you have questions on viewing or submitting material to the docket, call Renee V. Wright, Program Manager, Docket Operations, telephone (202) 366–9826.

SUPPLEMENTARY INFORMATION:

Table of Acronyms

DHS Department of Homeland Security
FR **Federal Register**
NPRM Notice of Proposed Rulemaking

A. Regulatory History and Information

On April 27, 2012, we published a notice of proposed rulemaking (NPRM) entitled ''Special Local Regulations for

Marine Events; Potomac River, National Harbor Access Channel, MD'' in the **Federal Register** (77 FR 82). We received no comments on the proposed rule. No public meeting was requested, and none was held.

Under 5 U.S.C. 553(d)(3), the Coast Guard finds that good cause exists for making this rule effective less than 30 days after publication in the **Federal Register**. The potential dangers posed by persons and vessels operating in close proximity to swimmers crossing navigation channels make special local regulations necessary. Delaying the effective date would be contrary to the public interest because it would require rescheduling the event, which hundreds of people are involved in. The regulation is necessary to ensure the safety of the event participants, patrol vessels, support craft and other vessels transiting the event area.

B. Basis and Purpose

On July 8, 2012, the National Harbor Marina of Oxon Hill, Maryland, will sponsor a swimming competition across the Potomac River between Alexandria, Virginia and Oxon Hill, Maryland. The event consists of up to 250 swimmers on a 1.3-mile linear course located downriver from the Woodrow Wilson Memorial (I–495/I–95) Bridge. The swimmers will be supported by sponsor-provided watercraft. The start will be located at North Point in Jones Point Park and the finish will be located along the shore at National Harbor Marina. Portions of the swim course will cross the Potomac River federal navigation channel and the National Harbor Access Channel. Due to the need for vessel control during the event, the Coast Guard will temporarily restrict vessel traffic in the event area to provide for the safety of participants, spectators and other transiting vessels.

C. Discussion of Comments, Changes and the Final Rule

The Coast Guard received no comments in response to the NPRM. No public meeting was requested and none was held.

D. Regulatory Analyses

We developed this rule after considering numerous statutes and executive orders related to rulemaking. Below we summarize our analyses based on 13 of these statutes or executive orders.

1. Regulatory Planning and Review

This rule is not a significant regulatory action under section 3(f) of Executive Order 12866, Regulatory Planning and Review, as supplemented by Executive Order 13563, Improving Regulation and Regulatory Review, and does not require an assessment of potential costs and benefits under section 6(a)(3) of Executive Order 12866 or under section 1 of Executive Order 13563. The Office of Management and Budget has not reviewed it under those Orders. Although this regulation will prevent traffic from transiting portions of the Potomac River and National Harbor Access Channel during the event, the effect of this regulation will not be significant due to the limited duration that the regulated area will be in effect and the extensive advance notifications that will be made to the maritime community via the Local Notice to Mariners and marine information broadcasts, so mariners can adjust their plans accordingly. Additionally, the regulated area has been narrowly tailored to impose the least impact on general navigation yet provide the level of safety deemed necessary. Vessel traffic will be able to transit safely through a portion of the regulated area, but only after the last participant has cleared that portion of the regulated area and when the Coast Guard Patrol Commander deems it safe to do so.

2. Impact on Small Entities

The Regulatory Flexibility Act of 1980 (RFA), 5 U.S.C. 601–612, as amended, requires federal agencies to consider the potential impact of regulations on small entities during rulemaking. The Coast Guard received no comments from the Small Business Administration on this rule. The Coast Guard certifies under 5 U.S.C. 605(b) that this rule will not have a significant economic impact on a substantial number of small entities. This rule would affect the following entities, some of which might be small entities: The owners or operators of vessels intending to transit or anchor in the effected portions of the Potomac River, including and National Harbor Access Channel, during the event.

Although this regulation prevents traffic from transiting portions of the Potomac River and the National Harbor Access Channel during the event, this rule will not have a significant economic impact on a substantial number of small entities for the following reasons. This rule would be in effect for only a limited period. Though the regulated area extends across the entire width of the river, vessel traffic may be permitted to safely transit a portion of the regulated area, but only after all participants have safely cleared that portion of the regulated area and when the Coast Guard Patrol Commander deems it safe for vessel traffic to do so. All Coast Guard vessels enforcing this regulated area can be contacted on marine band radio VHF–FM channel 16 (156.8 MHz). Before the enforcement period, we will issue maritime advisories so mariners can adjust their plans accordingly.

3. Assistance for Small Entities

Under section 213(a) of the Small Business Regulatory Enforcement Fairness Act of 1996 (Pub. L. 104–121), we want to assist small entities in understanding this rule. If the rule would affect your small business, organization, or governmental jurisdiction and you have questions concerning its provisions or options for compliance, please contact the person listed in the **FOR FURTHER INFORMATION CONTACT**, above.

Small businesses may send comments on the actions of Federal employees who enforce, or otherwise determine compliance with, Federal regulations to the Small Business and Agriculture Regulatory Enforcement Ombudsman and the Regional Small Business Regulatory Fairness Boards. The Ombudsman evaluates these actions annually and rates each agency's responsiveness to small business. If you wish to comment on actions by employees of the Coast Guard, call 1–888–REG–FAIR (1–888–734–3247). The Coast Guard will not retaliate against small entities that question or complain about this rule or any policy or action of the Coast Guard.

4. Collection of Information

This rule will not call for a new collection of information under the Paperwork Reduction Act of 1995 (44 U.S.C. 3501–3520).

5. Federalism

A rule has implications for federalism under Executive Order 13132, Federalism, if it has a substantial direct effect on the States, on the relationship between the national government and the States, or on the distribution of power and responsibilities among the various levels of government. We have analyzed this rule under that Order and determined that this rule does not have implications for federalism.

6. Protest Activities

The Coast Guard respects the First Amendment rights of protesters. Protesters are asked to contact the person listed in the **FOR FURTHER INFORMATION CONTACT** section to coordinate protest activities so that your message can be received without jeopardizing the safety or security of people, places or vessels.

7. Unfunded Mandates Reform Act

The Unfunded Mandates Reform Act of 1995 (2 U.S.C. 1531–1538) requires Federal agencies to assess the effects of their discretionary regulatory actions. In particular, the Act addresses actions that may result in the expenditure by a State, local, or tribal government, in the aggregate, or by the private sector of $100,000,000 (adjusted for inflation) or more in any one year. Though this rule will not result in such an expenditure, we do discuss the effects of this rule elsewhere in this preamble.

8. Taking of Private Property

This rule will not cause a taking of private property or otherwise have taking implications under Executive Order 12630, Governmental Actions and Interference with Constitutionally Protected Property Rights.

9. Civil Justice Reform

This rule meets applicable standards in sections 3(a) and 3(b)(2) of Executive Order 12988, Civil Justice Reform, to minimize litigation, eliminate ambiguity, and reduce burden.

10. Protection of Children

We have analyzed this rule under Executive Order 13045, Protection of Children from Environmental Health Risks and Safety Risks. This rule is not an economically significant rule and does not create an environmental risk to health or risk to safety that may disproportionately affect children.

11. Indian Tribal Governments

This rule does not have tribal implications under Executive Order 13175, Consultation and Coordination with Indian Tribal Governments, because it does not have a substantial direct effect on one or more Indian tribes, on the relationship between the Federal Government and Indian tribes, or on the distribution of power and responsibilities between the Federal Government and Indian tribes.

12. Energy Effects

This action is not a ''significant energy action'' under Executive Order 13211, Actions Concerning Regulations That Significantly Affect Energy Supply, Distribution, or Use.

13. Technical Standards

This rule does not use technical standards. Therefore, we did not consider the use of voluntary consensus standards.

14. Environment

We have analyzed this rule under Department of Homeland Security Management Directive 023–01 and Commandant Instruction M16475.lD, which guide the Coast Guard in complying with the National Environmental Policy Act of 1969 (NEPA) (42 U.S.C. 4321–4370f), and have determined that this action is one of a category of actions that do not individually or cumulatively have a significant effect on the human environment. This rule involves implementation of regulations within 33 CFR Part 100 applicable to organized marine events on the navigable waters of the United States that could negatively impact the safety of waterway users and shore side activities in the event area. The category of water activities includes but is not limited to sail boat regattas, boat parades, power boat racing, swimming events, crew racing, canoe and sail board racing. This rule is categorically excluded from further review under paragraph 34(h) of Figure 2–1 of the Commandant Instruction. An environmental analysis checklist supporting this determination and a Categorical Exclusion Determination are available in the docket where indicated under **ADDRESSES**.

List of Subjects in 33 CFR Part 100

Marine safety, Navigation (water), Reporting and recordkeeping requirements, Waterways.

For the reasons discussed in the preamble, the Coast Guard amends 33 CFR part 100 as follows:

PART 100—SAFETY OF LIFE ON NAVIGABLE WATERS

■ 1. The authority citation for part 100 continues to read as follows:

Authority: 33 U.S.C. 1233.

■ 2. Add a temporary section, § 100.35–T05–0276 to read as follows:

§ 100.35T05–0276 Special Local Regulations for Marine Events; Potomac River, National Harbor Access Channel, MD.

(a) *Regulated area.* The following location is a regulated area: All waters of the Potomac River, within lines connecting the following positions: From 38°47′35″ N, longitude 077°02′22″ W, thence to latitude 38°47′12″ N, longitude 077°00′57″ W, and from latitude 38°47′24″ N, longitude 077°03′03″ W to latitude 38°46′54″ N, longitude 077°01′09″ W. All coordinates reference Datum NAD 1983.

(b) *Definitions.* (1) *Coast Guard Patrol Commander* means a commissioned, warrant, or petty officer of the U. S. Coast Guard who has been designated by the Commander, Coast Guard Sector Baltimore.

(2) *Official Patrol* means any vessel assigned or approved by Commander, Coast Guard Sector Baltimore with a commissioned, warrant, or petty officer on board and displaying a Coast Guard ensign.

(c) *Special local regulations.* (1) The Coast Guard Patrol Commander may forbid and control the movement of all vessels and persons in the regulated area. When hailed or signaled by an official patrol vessel, a vessel or person in the regulated area shall immediately comply with the directions given. Failure to do so may result in expulsion from the area, citation for failure to comply, or both.

(2) Persons desiring to transit the regulated area must first obtain authorization from the Captain of the Port Baltimore or his designated representative. To seek permission to transit the area, the Captain of the Port Baltimore and his designated representatives can be contacted at telephone number 410–576–2693 or on Marine Band Radio, VHF–FM channel 16 (156.8 MHz). All Coast Guard vessels enforcing this regulated area can be contacted on marine band radio VHF–FM channel 16 (156.8 MHz).

(3) The Coast Guard will publish a notice in the Fifth Coast Guard District Local Notice to Mariners and issue a marine information broadcast on VHF–FM marine band radio announcing specific event date and times.

(d) Enforcement period. This section will be enforced from 7 a.m. until 11 a.m. on July 8, 2012.

Dated: June 13, 2012.

Mark P. O'Malley,

Captain, U.S. Coast Guard, Captain of the Port Baltimore.

[FR Doc. 2012–16395 Filed 7–3–12; 8:45 am]

BILLING CODE 9110–04–P

DEPARTMENT OF HOMELAND SECURITY

Coast Guard

33 CFR Part 100

[Docket No. USCG–2011–0452]

Seattle Seafair Unlimited Hydroplane Race

AGENCY: Coast Guard, DHS.

ACTION: Notice of enforcement of regulation.

SUMMARY: The Coast Guard will enforce the Seattle Seafair Unlimited Hydroplane Race Special Local Regulation on Lake Washington, WA from 8 a.m. on August 2, 2012 through 11:59 p.m. on August 5, 2012 during

hydroplane race times. This action is necessary to ensure public safety from the inherent dangers associated with high-speed races while allowing access for rescue personnel in the event of an emergency. During the enforcement period, no person or vessel will be allowed to enter the regulated area without the permission of the Captain of the Port, on-scene Patrol Commander or Designated Representative.

DATES: The regulations in 33 CFR 100.1301 will be effective from 8 a.m. on August 2, 2012 through 11:59 p.m. on August 5, 2012.

FOR FURTHER INFORMATION CONTACT: If you have questions on this notice, call or email Ensign Nathaniel P. Clinger, Sector Puget Sound Waterways Management Division, Coast Guard; telephone 206–217–6045, email *SectorPugetSoundWWM@uscg.mil*.

SUPPLEMENTARY INFORMATION: The Coast Guard will enforce the special local regulation for the annual Seattle Seafair Unlimited Hydroplane Race in 33 CFR 100.1301 from 8 a.m. on August 2, 2012 through 11:59 p.m. on August 5, 2012.

Under the provisions of 33 CFR 100.1301, the Coast Guard will restrict general navigation in the following area: The waters of Lake Washington bounded by the Interstate 90 (Mercer Island/Lacey V. Murrow) Bridge, the western shore of Lake Washington, and the east/west line drawn tangent to Bailey Peninsula and along the shoreline of Mercer Island.

The regulated area has been divided into two zones. The zones are separated by a line perpendicular from the I–90 Bridge to the northwest corner of the East log boom and a line extending from the southeast corner of the East log boom to the southeast corner of the hydroplane race course and then to the northerly tip of Ohlers Island in Andrews Bay. The western zone is designated Zone I, the eastern zone, Zone II. (Refer to NOAA Chart 18447).

The Coast Guard will maintain a patrol consisting of Coast Guard vessels, assisted by Auxiliary Coast Guard vessels, in Zone II. The Coast Guard patrol of this area is under the direction of the Coast Guard Patrol Commander (the ''Patrol Commander''). The Patrol Commander is empowered to control the movement of vessels on the racecourse and in the adjoining waters during the periods this regulation is in effect. The Patrol Commander may be assisted by other federal, state and local law enforcement agencies.

Only authorized vessels may be allowed to enter Zone I during the hours this regulation is in effect. Vessels in the vicinity of Zone I shall maneuver and anchor as directed by Coast Guard Officers or Petty Officers.

During the times in which the regulation is in effect, the following rules shall apply:

(1) Swimming, wading, or otherwise entering the water in Zone I by any person is prohibited while hydroplane boats are on the racecourse. At other times in Zone I, any person entering the water from the shoreline shall remain west of the swim line, denoted by buoys, and any person entering the water from the log boom shall remain within ten (10) feet of the log boom.

(2) Any person swimming or otherwise entering the water in Zone II shall remain within ten (10) feet of a vessel.

(3) Rafting to a log boom will be limited to groups of three vessels.

(4) Up to six (6) vessels may raft together in Zone II if none of the vessels are secured to a log boom. Only vessels authorized by the Patrol Commander, other law enforcement agencies or event sponsors shall be permitted to tow other watercraft or inflatable devices.

(5) Vessels proceeding in either Zone I or Zone II during the hours this regulation is in effect shall do so only at speeds which will create minimum wake, seven (07) miles per hour or less. This maximum speed may be reduced at the discretion of the Patrol Commander.

(6) Upon completion of the daily racing activities, all vessels leaving either Zone I or Zone II shall proceed at speeds of seven (07) miles per hour or less. The maximum speed may be reduced at the discretion of the Patrol Commander.

(7) A succession of sharp, short signals by whistle or horn from vessels patrolling the areas under the direction of the Patrol Commander shall serve as signal to stop. Vessels signaled shall stop and shall comply with the orders of the patrol vessel; failure to do so may result in expulsion from the area, citation for failure to comply, or both.

The Coast Guard may be assisted by other Federal, State, or local law enforcement agencies in enforcing this regulation.

This notice is issued under authority of 33 CFR 100.1301 and 5 U.S.C. 552(a). If the Captain of the Port determines that the regulated area need not be enforced for the full duration stated in this notice, he may use a Broadcast Notice to Mariners to grant general permission to enter the regulated area.

Dated: June 1, 2012.

S.J. Ferguson,

Captain, U.S. Coast Guard, Captain of the Port, Puget Sound.

[FR Doc. 2012–16399 Filed 7–3–12; 8:45 am]

BILLING CODE 9110–04–P

DEPARTMENT OF HOMELAND SECURITY

Coast Guard

33 CFR Parts 100 and 165

[Docket Number USCG–2012–0111]

RIN 1625–AA00; 1625–AA08

Special Local Regulation and Safety Zones; Marine Events in Captain of the Port Sector Long Island Sound Zone

AGENCY: Coast Guard, DHS.

ACTION: Final rule.

SUMMARY: The Coast Guard is establishing temporary special local regulations and safety zones for marine events on the navigable waters within the Captain of the Port (COTP) Sector Long Island Sound zone for regattas, fireworks displays and swim events. This action is necessary to provide for the safety of life on navigable waters during the events. Entering into, transiting through, remaining, anchoring or mooring within these regulated areas would be prohibited unless authorized by the COTP Sector Long Island Sound.

DATES: This rule is effective from August 6, 2012 until November 11, 2012.

This rule will be enforced during the specific dates and time listed in TABLE 1 and 2 to § 165.T01–0111.

ADDRESSES: Documents mentioned in this preamble are part of docket [USCG–2012–0111]. To view documents mentioned in this preamble as being available in the docket, go to *http://www.regulations.gov,* type the docket number in the ''SEARCH'' box and click ''SEARCH.'' Click on Open Docket Folder on the line associated with this rulemaking. You may also visit the Docket Management Facility in Room W12–140 on the ground floor of the Department of Transportation West Building, 1200 New Jersey Avenue SE., Washington, DC 20590, between 9 a.m. and 5 p.m., Monday through Friday, except Federal holidays.

FOR FURTHER INFORMATION CONTACT: If you have questions on this rule, call or email Petty Officer Joseph Graun, Prevention Department, Coast Guard Sector Long Island Sound, (203) 468–4544, *Joseph.L.Graun@uscg.mil.* If you have questions on viewing or submitting

material to the docket, call Renee V. Wright, Program Manager, Docket Operations, telephone (202) 366–9826.

SUPPLEMENTARY INFORMATION:

Table of Acronyms

DHS Department of Homeland Security
FR **Federal Register**
NPRM Notice of Proposed Rulemaking
LIS Long Island Sound

A. Regulatory History and Information

On April 4, 2012 the Coast Guard published a notice of proposed rulemaking (NPRM) entitled Special Local Regulations and Safety Zones; Marine Events in Captain of the Port Sector Long Island Sound Zone, in the **Federal Register** (77 FR 20324).

We received no comments on the NPRM. No requests for a public meeting were received and no public meetings were held.

B. Basis and Purpose

The legal basis for this temporary rule is 33 U.S.C. 1226, 1231, 1233; 46 U.S.C. Chapters 454, 701, 3306, 3703; 50 U.S.C. 191, 195; 33 CFR 1.05–1, 6.04–1, 6.04–6 and 160.5; Public Law 107–295, 116 Stat. 2064; Department of Homeland Security Delegation No. 0170.1 which collectively authorize the Coast Guard to define regulatory special local regulations and safety zones.

This temporary rule establishes special local regulations and safety zones in order to provide for the safety of life on navigable waterways during regattas, fireworks displays and swim events.

C. Discussion of Comments, Changes and the Final Rule

In the NPRM the Coast Guard stated the following events: Davis Park Fireworks, Charles W. Morgan Anniversary Fireworks and Waves of Hope Swim, had not chose a date and time for their events and we would announce them in the final rule. The dates for each of the events are as follows: The Davis Park Fireworks have been removed from the table because the sponsor has decided not to hold the event. Charles W. Morgan Anniversary Fireworks will be held on November 3, 2012 and Waves of Hope Swim will be held on August 13, 2012. The dates can also be found in TABLE 1 & 2 to § 165.T01–0111.

The following events have been removed from this rulemaking and placed in a separate rulemaking under docket number (USCG–2012–0477) titled Safety Zones; Fireworks Displays in Captain of the Port Long Island Sound Zone. Salute to Veterans Devon Yacht Club Fireworks, Dolan Family Fourth Fireworks, Islip Fireworks, Madison Fireworks, Stratford Fireworks, Rowayton Fireworks, Quarentello Wedding Fireworks and Niantic Bay Fireworks. These events have been moved because there was less than 30 days between publication of this rule and the start of each events. Moving these events to a separate rulemaking allows the Coast Guard to accommodate a 30 day window between this rule publication and first day of being effective.

D. Regulatory Analyses

We developed this rule after considering numerous statutes and executive orders related to rulemaking. Below we summarize our analyses based on a number of these statutes or executive orders.

1. Regulatory Planning and Review

This rule is not a significant regulatory action under section 3(f) of Executive Order 12866, Regulatory Planning and Review, as supplemented by Executive Order 13563, Improving Regulation and Regulatory Review, and does not require an assessment of potential costs and benefits under section 6(a)(3) of Executive Order 12866 or under section 1 of Executive Order 13563. The Office of Management and Budget has not reviewed it under those Orders.

The Coast Guard determined that this rulemaking is not a significant regulatory action for the following reasons: The regulated areas are of limited duration and cover only a small portion of the navigable waterways. Furthermore, vessels may transit the navigable waterways outside of the regulated areas. Persons or vessels requiring entry into the regulated areas may be authorized to do so by the COTP Sector Long Island Sound or designated representative.

Advanced public notifications will also be made to the local maritime community through the Local Notice to Mariners as well as Broadcast Notice to Mariners.

2. Impact on Small Entities

The Regulatory Flexibility Act of 1980 (RFA), 5 U.S.C. 601–612, as amended, requires federal agencies to consider the potential impact of regulations on small entities during rulemaking. The Coast Guard received no comments from the Small Business Administration on this rule. The Coast Guard certifies under 5 U.S.C. 605(b) that this rule will not have a significant economic impact on a substantial number of small entities. This rule will affect the following entities, some of which may be small entities: the owners or operators of vessels intending to enter, transit, anchor or moor within the regulated areas during the enforcement periods stated for each event listed below in the List of Subjects.

These temporary special local regulations and safety zones will not have a significant economic impact on a substantial number of small entities for the following reasons: the regulated areas are of limited size and of short duration, vessels that can safely do so may navigate in all other portions of the waterways except for the areas designated as regulated areas, and vessels requiring entry into the regulated areas may be authorized to do so by the COTP Sector Long Island Sound or designated representative. Additionally, before the effective period, notifications will be made to the local maritime community through the Local Notice to Mariners and Broadcast Notice to Mariners well in advance of the events.

3. Assistance for Small Entities

Under section 213(a) of the Small Business Regulatory Enforcement Fairness Act of 1996 (Pub. L. 104–121), we want to assist small entities in understanding this rule. If the rule would affect your small business, organization, or governmental jurisdiction and you have questions concerning its provisions or options for compliance, please contact the person listed in the **FOR FURTHER INFORMATION CONTACT**, above.

Small businesses may send comments on the actions of Federal employees who enforce, or otherwise determine compliance with, Federal regulations to the Small Business and Agriculture Regulatory Enforcement Ombudsman and the Regional Small Business Regulatory Fairness Boards. The Ombudsman evaluates these actions annually and rates each agency's responsiveness to small business. If you wish to comment on actions by employees of the Coast Guard, call 1–888–REG–FAIR (1–888–734–3247). The Coast Guard will not retaliate against small entities that question or complain about this rule or any policy or action of the Coast Guard.

4. Collection of Information

This rule will not call for a new collection of information under the Paperwork Reduction Act of 1995 (44 U.S.C. 3501–3520).

5. Federalism

A rule has implications for federalism under Executive Order 13132, Federalism, if it has a substantial direct

effect on the States, on the relationship between the national government and the States, or on the distribution of power and responsibilities among the various levels of government. We have analyzed this rule under that Order and determined that this rule does not have implications for federalism.

6. Protest Activities

The Coast Guard respects the First Amendment rights of protesters. Protesters are asked to contact the person listed in the **FOR FURTHER INFORMATION CONTACT** section to coordinate protest activities so that your message can be received without jeopardizing the safety or security of people, places or vessels.

7. Unfunded Mandates Reform Act

The Unfunded Mandates Reform Act of 1995 (2 U.S.C. 1531–1538) requires Federal agencies to assess the effects of their discretionary regulatory actions. In particular, the Act addresses actions that may result in the expenditure by a State, local, or tribal government, in the aggregate, or by the private sector of $100,000,000 (adjusted for inflation) or more in any one year. Though this rule will not result in such an expenditure, we do discuss the effects of this rule elsewhere in this preamble.

8. Taking of Private Property

This rule will not cause a taking of private property or otherwise have taking implications under Executive Order 12630, Governmental Actions and Interference with Constitutionally Protected Property Rights.

9. Civil Justice Reform

This rule meets applicable standards in sections 3(a) and 3(b)(2) of Executive Order 12988, Civil Justice Reform, to minimize litigation, eliminate ambiguity, and reduce burden.

10. Protection of Children

We have analyzed this rule under Executive Order 13045, Protection of Children from Environmental Health Risks and Safety Risks. This rule is not an economically significant rule and does not create an environmental risk to health or risk to safety that may disproportionately affect children.

11. Indian Tribal Governments

This rule does not have tribal implications under Executive Order 13175, Consultation and Coordination with Indian Tribal Governments, because it does not have a substantial direct effect on one or more Indian tribes, on the relationship between the Federal Government and Indian tribes, or on the distribution of power and responsibilities between the Federal Government and Indian tribes.

12. Energy Effects

This action is not a ''significant energy action'' under Executive Order 13211, Actions Concerning Regulations That Significantly Affect Energy Supply, Distribution, or Use.

13. Technical Standards

This rule does not use technical standards. Therefore, we did not consider the use of voluntary consensus standards.

14. Environment

We have analyzed this rule under Department of Homeland Security Management Directive 023–01 and Commandant Instruction M16475.lD, which guide the Coast Guard in complying with the National Environmental Policy Act of 1969 (NEPA) (42 U.S.C. 4321–4370f), and have determined that this action is one of a category of actions that do not individually or cumulatively have a significant effect on the human environment. This rule involves the establishment of special local regulations and safety zones. This rule is categorically excluded from further review under paragraph 34(g)&(h), of Figure 2–1 of the Commandant Instruction. An environmental analysis checklist supporting this determination and a Categorical Exclusion Determination are available in the docket where indicated under **ADDRESSES**. We seek any comments or information that may lead to the discovery of a significant environmental impact from this rule.

List of Subjects

33 CFR Part 100

Marine safety, Navigation (water), Reporting and recording requirements, Waterways.

33 CFR Part 165

Harbors, Marine safety, Navigation (water), Reporting and recordkeeping requirements, Security measures, and Waterways.

For the reasons discussed in the preamble, the Coast Guard amends 33 CFR parts 100 and 165 as follows:

PART 100—SAFETY OF LIFE ON NAVIGABLE WATERS

■ 1. The authority citation for part 100 continues to read as follows:

Authority: 33 U.S.C. 1233.

■ 2. Add § 100.35T01–0111 to read as follows:

§ 100.35T01–0111 Special Local Regulations; Regattas in the Coast Guard Sector Long Island Sound Captain of the Port Zone.

(a) *Regulations.* The following regulations apply to the marine events listed in TABLE 1 to § 100.35T01–0111. These regulations will be enforced for the duration of each event, on the dates indicated. Notifications will be made to the local maritime community through all appropriate means such as Local Notice to Mariners or Broadcast Notice to Mariners well in advance of the events. First Coast Guard District Local Notice to Mariners can be found at: *http://www.navcen.uscg.gov/*.

(b) *Definitions.* The following definitions apply to this section:

(1) *Designated Representative.* A ''designated representative'' is any Coast Guard commissioned, warrant or petty officer of the U.S. Coast Guard who has been designated by the Captain of the Port (COTP), Sector Long Island Sound, to act on his or her behalf. The designated representative may be on an official patrol vessel or may be on shore and will communicate with vessels via VHF–FM radio or loudhailer. In addition, members of the Coast Guard Auxiliary may be present to inform vessel operators of this regulation.

(2) *Official Patrol Vessels.* Official patrol vessels may consist of any Coast Guard, Coast Guard Auxiliary, state, or local law enforcement vessels assigned or approved by the COTP Sector Long Island Sound.

(3) *Spectators.* All persons and vessels not registered with the event sponsor as participants or official patrol vessels.

(c) Vessel operators desiring to enter or operate within the regulated areas shall contact the COTP Sector Long Island Sound at 203–468–4401 (Sector LIS command center) or the designated representative via VHF channel 16.

(d) Vessels may not transit the regulated areas without the COTP Sector Long Island Sound or designated representative approval. Vessels permitted to transit must operate at a no wake speed, in a manner which will not endanger participants or other crafts in the event.

(e) Spectators or other vessels shall not anchor, block, loiter, or impede the transit of event participants or official patrol vessels in the regulated areas during the effective dates and times, or dates and times as modified through the Local Notice to Mariners, unless authorized by COTP Sector Long Island Sound or designated representative.

(f) The COTP Sector Long Island Sound or designated representative may

control the movement of all vessels in the regulated area. When hailed or signaled by an official patrol vessel, a vessel shall come to an immediate stop and comply with the lawful directions issued. Failure to comply with a lawful direction may result in expulsion from the area, citation for failure to comply, or both. The COTP Sector Long Island Sound or designated representative may delay or terminate any marine event in this subpart at any time it is deemed necessary to ensure the safety of life or property.

(g) For all regattas listed, vessels not participating in the event, swimmers, and personal watercraft of any nature are prohibited from entering or moving within the regulated area unless authorized by the COTP Sector Long Island Sound or designated representative. Vessels within the regulated area must be at anchor within a designated spectator area or moored to a waterfront facility in a way that will not interfere with the progress of the event.

TABLE 1

[to § 100.35T01–0111]

1 Hartford Dragon Boat Regatta	• Dates: August 18 and 19, 2012. • Time 8 a.m. until 4:30 p.m. each day. • Regulated area: All waters of the Connecticut River in Hartford, CT between the Bulkeley Bridge 41°46′10.10″ N, 072°39′56.13″ W and the Wilbur Cross Bridge 41°45′11.67″ N, 072°39′13.64″ W North American Datum 1983 (NAD 83).
2 Kayak for a Cause Regatta	• Date: July 21, 2012. • Time: 8 a.m. until 3 p.m. • Regulated area: All water of Long Island Sound within a nine mile long and half mile wide rectangle shaped regatta course connecting Norwich, CT and Crab Meadow, NY. The regulated area beginning in Norwich CT east of Shady Beach at 41°5′32.24″ N, 073°23′11.18″ W then heads south crossing Long Island Sound to a point east of Crab Meadow Beach, Crab Meadow, NY at 40°55′37.21″ N, 073°19′2.14″ W then turns west connecting to a point west of Crab Meadow Beach at 40°55′48.3″ N, 073°19′51.88″ W, then turns north crossing Long Island Sound to the western boundary of Calf Pasture Beach Norwich, CT at 41°4′57.54″ N, 073°23′53.21″ W then turns east back to its starting point at 41°5′32.24″ N, 073°23′11.18″ W North American Datum 1983 (NAD 83). • Additional stipulations: (1) Spectators must maintain a minimum distance of 100 yards from each event participant and support vessel. (2) Vessels that maintain the minimum required distance from event participants and support vessels may transit through the regatta course.

PART 165—REGULATED NAVIGATION AREAS AND LIMITED ACCESS AREAS

■ 3. The authority citation for part 165 continues to read as follows:

Authority: 33 U.S.C. 1226, 1231; 46 U.S.C. Chapters 454, 701, 3306, 3703; 50 U.S.C. 191, 195; 33 CFR 1.05–1, 6.04–1, 6.04–6 and 160.5; Public Law 107–295, 116 Stat. 2064; Department of Homeland Security Delegation No. 0170.1.

■ 4. Add § 165.T01–0111 to read as follows:

§ 165.T01–0111 Safety Zones; Fireworks Displays and Swim Events in Captain of the Port Long Island Sound Zone

(a) *Regulations.* The general regulations contained in 33 CFR 165.23 as well as the following regulations apply to the fireworks displays, air shows, and swim events listed in TABLE 1 and TABLE 2 of § 165.T01–0111. These regulations will be enforced for the duration of each event. Notifications will be made to the local maritime community through all appropriate means such as Local Notice to Mariners or Broadcast Notice to Mariners well in advance of the events. Mariners should consult their Local Notice to Mariners to remain apprised of schedule or event changes. First Coast Guard District Local Notice to Mariners can be found at *http://www.navcen.uscg.gov/*.

(b) *Definitions.* The following definitions apply to this section:

(1) *Designated Representative.* A ''designated representative'' is any Coast Guard commissioned, warrant or petty officer of the U.S. Coast Guard who has been designated by the Captain of the Port (COTP), Sector Long Island Sound, to act on his or her behalf. The designated representative may be on an official patrol vessel or may be on shore and will communicate with vessels via VHF–FM radio or loudhailer. In addition, members of the Coast Guard Auxiliary may be present to inform vessel operators of this regulation.

(2) *Official Patrol Vessels.* Official patrol vessels may consist of any Coast Guard, Coast Guard Auxiliary, state, or local law enforcement vessels assigned or approved by the COTP Sector Long Island Sound.

(3) *Spectators.* All persons and vessels not registered with the event sponsor as participants or official patrol vessels.

(c) Vessel operators desiring to enter or operate within the regulated areas should contact the COTP Sector Long Island Sound at 203–468–4401 (Sector LIS command center) or the designated representative via VHF channel 16 to obtain permission to do so.

(d) Spectators or other vessels shall not anchor, block, loiter, or impede the transit of event participants or official patrol vessels in the regulated areas during the effective dates and times, or dates and times as modified through the Local Notice to Mariners, unless authorized by COTP Sector Long Island Sound or designated representative.

(e) Upon being hailed by a U.S. Coast Guard vessel or the designated representative, by siren, radio, flashing light or other means, the operator of the vessel shall proceed as directed. Failure to comply with a lawful direction may result in expulsion from the area, citation for failure to comply, or both.

(f) The COTP Sector Long Island Sound or designated representative may delay or terminate any marine event in this subpart at any time it is deemed necessary to ensure the safety of life or property.

(g) The regulated area for all fireworks displays listed in TABLE 1 to § 165.T01–0111 is that area of navigable waters within a 1000 foot radius of the launch platform or launch site for each fireworks display, unless otherwise noted in TABLE 1 to § 165.T01–0111 or modified in USCG First District Local Notice to Mariners at: *http://www.navcen.uscg.gov/*.

(h) Fireworks barges used in these locations will also have a sign on their port and starboard side labeled ''FIREWORKS—STAY AWAY''. This sign will consist of 10 inch high by 1.5 inch wide red lettering on a white background. Shore sites used in these locations will display a sign labeled ''FIREWORKS—STAY AWAY'' with the same dimensions. These zones will be enforced from 8:30 p.m. to 10:30 p.m. each day a barge with a ''FIREWORKS—STAY AWAY'' sign on the port and starboard side is on-scene or a ''FIREWORKS—STAY AWAY'' sign is posted in a location listed in TABLE 1 to § 165.T01–0111.

(i) *Enforcement period.*

(1) Each fireworks display will be enforced from 8:30 p.m. until 10 p.m. on the respective dates listed in Table 1 of § 165.T01–0111.

(2) Each swim event will be enforced during the date and time listed in Table 2 of § 165.T01–0111.

TABLE 1

[To § 165.T01–0111]

8	August
8.1 Shelter Island Yacht Club Fireworks	• Date: August 11, 2012. • Rain date: August 12, 2012. • Location: Waters of Dering Harbor north of Shelter Island Yacht Club in Shelter Island, NY in approximate position 41°05′23.47″ N, 072°21′11.18″ W (NAD 83).
8.2 Stamford Fireworks	• Date: August 30, 2012. • Rain date: August 31, 2012. • Location: Waters of Stamford Harbor, off Kosciuszco Park in Stamford, CT in approximate position 41°1′48.46″ N, 073°32′15.32″ W (NAD 83).
11	**November**
1 Charles W. Morgan Anniversary Fireworks	• Date: November 3, 2012. • Rain date: November 10, 2012. • Location: Waters of the Mystic River, north of the Mystic Seaport Light, Mystic, CT in approximate position 41°21′56.455″ N, 071°57′58.32″ W (NAD 83).

TABLE 2

[To § 165.T01–0111 July & August]

1 Waves of Hope Swim	• Date: August 13, 2012. • Time: 8 a.m. until 10 a.m. Location: All waters of the Great South Bay off Amityville, NY shoreward of a line created by connecting the following points. Beginning at 40°39′22.38″ N, 073°25′31.63″ W then to 40°39′2.18″ N, 073°25′31.63″ W then to 40°39′2.18″ N, 073°24′03.81″ W, ending at 40°39′18.27″ N, 073°24′03.81″ W North American Datum 1983 (NAD 83).
2 Stonewall Swim	• Date: August 4, 2012. • Time: 8:30 a.m. until 12:30 p.m. Location: All navigable waters of the Great South Bay within a three miles long and half mile wide box connecting Snedecor Avenue in Bayport, NY to Porgie Walk in Fire Island, NY. Formed by connecting the following points. Beginning at 40°43′40.24″ N, 073°03′41.5″ W then to 40°43′40″ N, 073°03′13.4″ W, then to 40°40′4.13″ N, 073°03′43.81″ W then to 40°40′8.3″ N, 073°03′17.7″ W and ending at the beginning point 40°43′40.24″ N, 073°03′41.5″ W (NAD 83).

Dated: June 7, 2012.

J.M. Vojvodich,

Captain, U.S. Coast Guard, Captain of the Port Sector Long Island Sound.

[FR Doc. 2012–16296 Filed 7–3–12; 8:45 am]

BILLING CODE 9110–04–P

DEPARTMENT OF HOMELAND SECURITY

Coast Guard

33 CFR Part 165

[Docket No. USCG–2012–0568]

RIN 1625–AA00

Safety Zone; Barbara Harder Wedding Fireworks, Lake Erie, Lake View, NY

AGENCY: Coast Guard, DHS.

ACTION: Temporary final rule.

SUMMARY: The Coast Guard is establishing a temporary safety zone on Lake Erie, Lake View, NY. This safety zone is intended to restrict vessels from a portion of Lake Erie during the Barbara Harder Wedding Fireworks. This temporary safety zone is necessary to protect spectators and vessels from the hazards associated with a fireworks display.

DATES: This rule will be effective from 9 p.m. until 11 p.m. on July 7, 2012.

ADDRESSES: Documents mentioned in this preamble are part of docket [USCG–2012–0568]. To view documents mentioned in this preamble as being available in the docket, go to *http://www.regulations.gov,* type the docket number in the ''SEARCH'' box, and click ''Search.'' You may visit the Docket Management Facility, Department of Transportation, West Building Ground Floor, Room W12–140, 1200 New Jersey Avenue SE., Washington, DC 20590, between 9 a.m. and 5 p.m., Monday through Friday, except Federal holidays.

FOR FURTHER INFORMATION CONTACT: If you have questions on this temporary rule, call or email LT Christopher Mercurio, Chief of Waterways Management, U.S. Coast Guard Sector Buffalo; telephone 716–843–9343, email *SectorBuffaloMarineSafety@uscg.mil.* If you have questions on viewing or submitting material to the docket, call Renee V. Wright, Program Manager, Docket Operations, telephone 202–366–9826.

SUPPLEMENTARY INFORMATION:

Table of Acronyms

DHS Department of Homeland Security
FR **Federal Register**
NPRM Notice of Proposed Rulemaking

A. Regulatory History and Information

The Coast Guard is issuing this temporary final rule without prior notice and opportunity to comment pursuant to authority under section 4(a) of the Administrative Procedure Act (APA) (5 U.S.C. 553(b)). This provision authorizes an agency to issue a rule without prior notice and opportunity to comment when the agency for good cause finds that those procedures are ''impracticable, unnecessary, or contrary to the public interest.'' Under 5 U.S.C. 553(b)(B), the Coast Guard finds that good cause exists for not publishing a notice of proposed rulemaking (NPRM) with respect to this rule because doing so would be impracticable and contrary to the public interest. The final details for this event were not known to the Coast Guard until there was insufficient time remaining before the event to publish an NPRM. Thus, delaying the effective date of this rule to wait for a comment period to run would be both impracticable and contrary to the public interest because it would inhibit the Coast Guard's ability to protect spectators and vessels from the hazards associated with a maritime fireworks display, which are discussed further below.

Under 5 U.S.C. 553(d)(3), the Coast Guard finds that good cause exists for making this rule effective less than 30 days after publication in the **Federal Register.** For the same reasons discussed in the preceding paragraph, waiting for 30 day notice period run would be impracticable and contrary to the public interest.

B. Basis and Purpose

Between 9:30 p.m. and 10:30 p.m. on July 7, 2012, a fireworks display will be held on Lake Erie near Lake View, NY. The Captain of the Port Buffalo has determined that fireworks launched proximate to a gathering of watercraft pose a significant risk to public safety and property. Such hazards include premature and accidental detonations, dangerous projectiles, and falling or burning debris.

C. Discussion of Rule

With the aforementioned hazards in mind, the Captain of the Port Buffalo has determined that this temporary safety zone is necessary to ensure the safety of spectators and vessels during the Barbara Harder Wedding Fireworks. This zone will be effective and enforced from 9 p.m. until 11 p.m. on July 7, 2012. This zone will encompass all waters of Lake Erie, Lake View, NY within a 560 foot radius of position 42°43′17.8″ N and 78°57′54.2″ W (NAD 83).

Entry into, transiting, or anchoring within the safety zone is prohibited unless authorized by the Captain of the Port Buffalo or his designated on-scene representative. The Captain of the Port or his designated on-scene representative may be contacted via VHF Channel 16.

D. Regulatory Analyses

We developed this rule after considering numerous statutes and executive orders related to rulemaking. Below we summarize our analyses based on 13 of these statutes or executive orders.

1. Regulatory Planning and Review

This rule is not a significant regulatory action under section 3(f) of Executive Order 12866, Regulatory Planning and Review, as supplemented by Executive Order 13563, Improving Regulation and Regulatory Review, and does not require an assessment of potential costs and benefits under section 6(a)(3) of that Order. Executive Order 12866 or under section 1 of Executive Order 13563. The Office of Management and Budget has not reviewed it under those Orders. It is not ''significant'' under the regulatory policies and procedures of the Department of Homeland Security (DHS). We conclude that this rule is not a significant regulatory action because we anticipate that it will have minimal impact on the economy, will not interfere with other agencies, will not adversely alter the budget of any grant or loan recipients, and will not raise any novel legal or policy issues. The safety zone created by this rule will be relatively small and enforced for relatively short time. Also, the safety zone is designed to minimize its impact on navigable waters. Furthermore, the safety zone has been designed to allow vessels to transit around it. Thus, restrictions on vessel movement within that particular area are expected to be minimal. Under certain conditions, moreover, vessels may still transit through the safety zone when permitted by the Captain of the Port.

2. Impact on Small Entities

The Regulatory Flexibility Act of 1980 (RFA), 5 U.S.C. 601–612, as amended, requires federal agencies to consider the potential impact of regulations on small entities during rulemaking. The Coast Guard certifies under 5 U.S.C. 605(b) that this rule will not have a significant economic impact on a substantial number of small entities.

This rule will affect the following entities, some of which might be small entities: The owners or operators of vessels intending to transit or anchor in a portion of the Lake Erie on the evening of July 7, 2012.

This safety zone will not have a significant economic impact on a substantial number of small entities for the following reasons: This safety zone would be activated, and thus subject to enforcement, for only two hours late in the day. Traffic may be allowed to pass through the zone with the permission of the Captain of the Port. The Captain of the Port can be reached via VHF channel 16. Before the activation of the zone, we would issue local Broadcast Notice to Mariners.

3. Assistance for Small Entities

Under section 213(a) of the Small Business Regulatory Enforcement Fairness Act of 1996 (Pub. L. 104–121), we want to assist small entities in understanding this rule. If the rule would affect your small business, organization, or governmental jurisdiction and you have questions concerning its provisions or options for compliance, please contact the person listed in the **FOR FURTHER INFORMATION CONTACT** section above.

Small businesses may send comments on the actions of Federal employees who enforce, or otherwise determine compliance with, Federal regulations to the Small Business and Agriculture Regulatory Enforcement Ombudsman and the Regional Small Business Regulatory Fairness Boards. The Ombudsman evaluates these actions annually and rates each agency's responsiveness to small business. If you wish to comment on actions by employees of the Coast Guard, call 1–888–REG–FAIR (1–888–734–3247). The Coast Guard will not retaliate against small entities that question or complain about this rule or any policy or action of the Coast Guard.

4. Collection of Information

This rule will not call for a new collection of information under the Paperwork Reduction Act of 1995 (44 U.S.C. 3501–3520).

5. Federalism

A rule has implications for federalism under Executive Order 13132, Federalism, if it has a substantial direct effect on the States, on the relationship between the national government and the States, or on the distribution of power and responsibilities among the various levels of government. We have analyzed this rule under that Order and determined that this rule does not have implications for federalism.

6. Unfunded Mandates Reform Act

The Unfunded Mandates Reform Act of 1995 (2 U.S.C. 1531–1538) requires Federal agencies to assess the effects of their discretionary regulatory actions. In particular, the Act addresses actions that may result in the expenditure by a State, local, or tribal government, in the aggregate, or by the private sector of $100,000,000 (adjusted for inflation) or more in any one year. Though this rule will not result in such an expenditure, we do discuss the effects of this rule elsewhere in this preamble.

7. Taking of Private Property

This rule will not cause a taking of private property or otherwise have taking implications under Executive Order 12630, Governmental Actions and Interference with Constitutionally Protected Property Rights.

8. Civil Justice Reform

This rule meets applicable standards in sections 3(a) and 3(b)(2) of Executive Order 12988, Civil Justice Reform, to minimize litigation, eliminate ambiguity, and reduce burden.

9. Protection of Children

We have analyzed this rule under Executive Order 13045, Protection of Children from Environmental Health Risks and Safety Risks. This rule is not an economically significant rule and does not create an environmental risk to health or risk to safety that may disproportionately affect children.

10. Indian Tribal Governments

This rule does not have tribal implications under Executive Order 13175, Consultation and Coordination with Indian Tribal Governments, because it does not have a substantial direct effect on one or more Indian tribes, on the relationship between the Federal Government and Indian tribes, or on the distribution of power and responsibilities between the Federal Government and Indian tribes.

11. Energy Effects

This action is not a ''significant energy action'' under Executive Order 13211, Actions Concerning Regulations That Significantly Affect Energy Supply, Distribution, or Use.

12. Technical Standards

This rule does not use technical standards. Therefore, we did not consider the use of voluntary consensus standards.

13. Environment

We have analyzed this rule under Department of Homeland Security Management Directive 023–01 and Commandant Instruction M16475.lD, which guide the Coast Guard in complying with the National Environmental Policy Act of 1969 (NEPA)(42 U.S.C. 4321–4370f), and have determined that this action is one of a category of actions that do not individually or cumulatively have a significant effect on the human environment. This rule involves the establishment of a safety zone and, therefore it is categorically excluded from further review under paragraph 34(g) of Figure 2–1 of the Commandant Instruction. An environmental analysis checklist supporting this determination and a Categorical Exclusion Determination are available in the docket where indicated under **ADDRESSES**. We seek any comments or information that may lead to the discovery of a significant environmental impact from this rule.

List of Subjects in 33 CFR Part 165

Harbors, Marine safety, Navigation (water), Reporting and recordkeeping requirements, Security measures, Waterways.

For the reasons discussed in the preamble, the Coast Guard amends 33 CFR part 165 as follows:

PART 165—REGULATED NAVIGATION AREAS AND LIMITED ACCESS AREAS

■ 1. The authority citation for part 165 continues to read as follows:

Authority: 33 U.S.C. 1231; 46 U.S.C. Chapters 701, 3306, 3703; 50 U.S.C. 191, 195; 33 CFR 1.05–1, 6.04–1, 6.04–6, and 160.5; Public Law 107–295, 116 Stat. 2064; Department of Homeland Security Delegation No. 0170.1.

■ 2. Add § 165.T09–00568 to read as follows:

§ 165.T09–0568 Safety Zone; Barbara Harder Wedding Fireworks, Lake Erie, Lake View, NY.

(a) *Location.* The safety zone will encompass all waters of Lake Erie, Lake View, NY within a 560 foot radius of position 42°43′17.8″ N and 78°57′54.2″ W (NAD 83).

(b) Effective and Enforcement Period. This regulation is effective and will be enforced on July 7, 2012 from 9 p.m. until 11 p.m.

(c) *Regulations.* (1) In accordance with the general regulations in § 165.23 of this part, entry into, transiting, or anchoring within this safety zone is prohibited unless authorized by the

Captain of the Port Buffalo or his designated on-scene representative.

(2) This safety zone is closed to all vessel traffic, except as may be permitted by the Captain of the Port Buffalo or his designated on-scene representative.

(3) The ''on-scene representative'' of the Captain of the Port Buffalo is any Coast Guard commissioned, warrant or petty officer who has been designated by the Captain of the Port Buffalo to act on his behalf.

(4) Vessel operators desiring to enter or operate within the safety zone shall contact the Captain of the Port Buffalo or his on-scene representative to obtain permission to do so. The Captain of the Port Buffalo or his on-scene representative may be contacted via VHF Channel 16. Vessel operators given permission to enter or operate in the safety zone must comply with all directions given to them by the Captain of the Port Buffalo, or his on-scene representative.

Dated: June 21, 2012.

S.M. Wischmann,

Captain, U.S. Coast Guard, Captain of the Port Buffalo.

[FR Doc. 2012–16452 Filed 7–3–12; 8:45 am]

BILLING CODE 9110–04–P

ENVIRONMENTAL PROTECTION AGENCY

40 CFR Part 171

[EPA–HQ–OPP–2011–0049; FRL–9334–4]

RIN 2070–AJ77

Synchronizing the Expiration Dates of the Pesticide Applicator Certificate With the Underlying State or Tribal Certificate

AGENCY: Environmental Protection Agency (EPA).

ACTION: Final rule.

SUMMARY: This final rule will reduce burden to restricted use pesticide applicators and simplify federal certification expiration dates. Restricted use pesticides (RUPs) are those which may generally cause unreasonable adverse effects on the environment without additional restrictions. RUPs may only be applied by or under the direct supervision of an applicator certified as competent by a certifying agency. A State, tribe, or Federal agency becomes a certifying agency by receiving approval from EPA on their certification plan. In areas not covered by a certifying agency, EPA may establish a Federal certification plan and issue Federal certificates directly. One way EPA may issue a Federal certificate is based on an existing valid certificate from a certifying agency, and this final rule will synchronize the expiration dates on the Federal certificate with that of the certifying agency certificate on which the Federal certificate is based.

DATES: This final rule is effective September 4, 2012.

ADDRESSES: The docket for this action, identified by docket identification (ID) number EPA–HQ–OPP–2011–0049, is available either electronically through *http://www.regulations.gov* or in hard copy at the OPP Docket in the Environmental Protection Agency Docket Center (EPA/DC), located in EPA West, Rm. 3334, 1301 Constitution Ave. NW., Washington, DC 20460–0001. The Public Reading Room is open from 8:30 a.m. to 4:30 p.m., Monday through Friday, excluding legal holidays. The telephone number for the Public Reading Room is (202) 566–1744, and the telephone number for the OPP Docket is (703) 305–5805. Please review the visitor instructions and additional information about the docket available at *http://www.epa.gov/dockets.*

FOR FURTHER INFORMATION CONTACT: Joe Hogue, Field and External Affairs Division (7506P), Office of Pesticide Programs, Environmental Protection Agency, 1200 Pennsylvania Ave. NW., Washington, DC 20460–0001; telephone number: (703) 308–9072; fax number: (703) 308–7070; email address: *hogue.joe@epa.gov.*

SUPPLEMENTARY INFORMATION:

I. Executive Summary

A. Does this action apply to me?

You may be potentially affected by this action if you are or intend to become a certified applicator under an EPA Federal certification plan. Certified applicators are included in three major industries in the North American Industrial Classification System (NAICS) codes described as crop production, animal production or exterminating, and pest control services. Potentially affected entities may include, but are not limited to:

- Crop production (NAICS code 111), e.g., individuals that are private certified applicators on farms.
- Animal production (NAICS code 112), e.g., individuals that are private certified applicators on farms.
- Exterminating and pest control services (NAICS code 561710), e.g., individuals that are commercial certified applicators for hire.

This listing is not intended to be exhaustive, but rather provides a guide for readers regarding entities likely to be affected by this action. Other types of entities not listed in this unit could also be affected.

B. What is the agency's authority for taking this action?

This final rule is issued pursuant to the authority in sections 11 and 25 of the Federal Insecticide, Fungicide, and Rodenticide Act (FIFRA) (7 U.S.C. 136i and w). Section 11 of FIFRA (7 U.S.C. 136i), requires EPA to provide certification plans for applicators of RUPs. Section 25 of FIFRA (7 U.S.C. 136w), authorizes EPA to issue regulations to carry out provisions of FIFRA.

II. Background

Under the provisions of FIFRA section 3(d)(1)(C), EPA shall classify a pesticide for restricted use, if, absent additional regulatory restrictions, the Agency determines that it may generally cause unreasonable adverse effects on the environment. RUPs may be applied only by a certified applicator or under the direct supervision of a certified applicator.

Pesticide applicators can be certified either by a certifying agency (a State, tribe, or non-EPA Federal agency that has an EPA-approved certification plan), or directly by EPA through a Federal certification plan for an area or situation not covered by a certifying agency's plan. Applicators must demonstrate competency to the certifying agency granting the certificate, according to the requirements of that agency's plan. Currently, all 50 States, some federal agencies, and 4 tribes are certifying agencies (i.e., they implement their EPA-approved certification plans). Applicators certified by a State may apply RUPs in that State, and applicators certified by a tribe may apply RUPs in that tribe's Indian country, without a Federal certificate. However, under 40 CFR 171.11, in areas where there is no EPA-approved certification plan in effect (currently, most of Indian country), EPA may implement a Federal plan, thereby allowing applicators to use RUPs in the area covered by the plan after receiving Federal certification. Under 40 CFR 171.11(e), a Federal plan may include an option that allows applicators to be issued an EPA Federal certificate after submitting to EPA a certification form along with documentation of a valid certificate from a certifying agency, without further demonstration of competency.

Applicator certificates have expiration dates to help ensure that certified applicators maintain their competency.

All certifying agencies implement a recertification program for applicators. These programs require certified applicators to continue to meet the competency requirements either through continuing education or examination.

Section 171.11(e) states that an EPA Federal certificate based on a certifying agency's certificate is valid for 2 years for commercial applicators and 3 years for private applicators, or until the expiration date of the original certifying agency certificate, whichever occurs first. The duration of the certification period varies significantly among States, with some currently being shorter and some longer than the Federal certificate maximum of 2 or 3 years.

On June 24, 2011 (76 FR 37045) (FRL–8863–7), EPA published a proposed rule to eliminate the 2 or 3 year maximum for Federal certificates and allow Federal certification to expire at the same time as the underlying certifying agency certificate. The public comment period for the proposed rule closed on August 23, 2011. EPA received one comment, which was from a tribal government agency and supported the proposal. The commenter said that the rule will ''eliminate confusion about the different expiration dates and there will be less paperwork.''

III. Final Rule

This action will finalize what was proposed in June 2011. EPA is amending 40 CFR 171.11(e) to synchronize the expiration dates for the EPA Federal certificate with the certifying agency certifications of RUP applicators. This minor revision does not pose any additional requirement or burden and is expected to have a beneficial impact on affected entities, without impacting human health or the environment. EPA will benefit through the reduction of administration of Federal certification plans. Additionally, this rule supersedes the expiration dates described in the Navajo Certification Plan. Further explanation of benefits and the underlying reasons for this revision are explained in the proposed rule associated with this action (June 24, 2011; 76 FR 37045).

IV. FIFRA Mandated Reviews

In accordance with FIFRA section 25(a) and (d), EPA submitted a draft of this final rule to the Committee on Agriculture in the House of Representatives, the Committee on Agriculture, Nutrition, and Forestry in the United States Senate, the United States Department of Agriculture (USDA), and the FIFRA Scientific Advisory Panel (SAP). The SAP and USDA waived review of this final rule.

V. Statutory and Executive Order Reviews

This action will allow EPA to use the same expiration date for the certification it grants, using the expiration date of the valid certifying agency certification upon which the EPA certification is based. It does not otherwise amend or impose any other requirements. The final rule will not otherwise involve any significant policy or legal issues, and will not increase existing costs. In fact, synchronizing the expiration dates can reduce burden because some applicators will have to complete less paperwork by having a reduced frequency of Federal recertification. As such, EPA is not required to make special considerations or evaluations under the following statutory and Executive Order review requirements.

A. Executive Order 12866: Regulatory Planning and Review and Executive Order 13563: Improving Regulation and Regulatory Review

This is not a ''significant regulatory action'' under Executive Order 12866 (58 FR 51735, October 4, 1993) and is therefore not subject to review under Executive Orders 12866 and 13563 (76 FR 3821, January 21, 2011).

B. Paperwork Reduction Act (PRA)

This action does not impose or change any information collection burden that requires additional review by the Office of Management and Budget (OMB) under the provisions of the PRA (44 U.S.C. 3501 *et seq.*). Burden is defined at 5 CFR 1320.3(b). An Agency may not conduct or sponsor, and a person is not required to respond to a collection of information that requires OMB approval under PRA, unless it has been approved by OMB and displays a currently valid OMB control number. The OMB control numbers for EPA's regulations in title 40 of the CFR, after appearing in the **Federal Register**, are listed in 40 CFR part 9, and included on the related collection instrument, or form, if applicable.

The information collection activities contained in the regulations are already approved under OMB control number 2070–0029 (EPA ICR No. 0155.09), and the changes to the expiration date do not change the covered activities such that additional OMB review or approval is required.

C. Regulatory Flexibility Act (RFA)

Pursuant to section 605(b) of the RFA (5 U.S.C. 601 *et seq.*), I hereby certify that this final rule does not have a significant economic impact on a substantial number of small entities. Under the RFA, small entities include small businesses, small organizations, and small governmental jurisdictions. In making this determination, the impact of concern is any significant adverse economic impact on small entities because the primary purpose of regulatory flexibility analysis is to identify and address regulatory alternatives ''which minimize any significant economic impact of the rule on small entities.'' 5 U.S.C. 603 and 604. Thus, an agency may certify under RFA when the rule relieves regulatory burden, or otherwise has no expected economic impact on small entities subject to the rule.

The revision in this final rule will only synchronize the certification expiration dates for restricted use applicators and is not expected to have any adverse economic impacts on affected entities, regardless of their size. It does not otherwise amend or impose any other requirements. As such, this final rule will not have any adverse economic impact on any entities, large or small.

D. Unfunded Mandates Reform Act (UMRA)

State, local, and tribal governments are not regulated by this final rule, so it is not expected to affect these governments. Accordingly, pursuant to Title II of UMRA (2 U.S.C. 1531–1538), EPA has determined that this action is not subject to the requirements in sections 202 and 205 of UMRA because it does not contain a Federal mandate that may result in expenditures of $100 million or more for State, local, and tribal governments, in the aggregate, or for the private sector in any 1 year. In addition, this action does not significantly or uniquely affect small governments or impose a significant intergovernmental mandate, as described in sections 203 and 204 of UMRA.

E. Executive Order 13132: Federalism

This action will not have ''federalism implications'' as specified in Executive Order 13132 (64 FR 43255, August 10, 1999), because it is not expected to have a substantial direct effect on States, on the relationship between the national government and the States, or on the distribution of power and responsibilities among the various levels of government. Thus, Executive Order 13132 does not apply to this action.

F. Executive Order 13175: Consultation and Coordination With Indian Tribal Governments

This action does not have tribal implications as specified in Executive Order 13175 (65 FR 67249, November 9, 2000), because it will not have substantial direct effects on Indian tribes, on the relationship between the Federal Government and Indian tribes, or on the distribution of power and responsibilities between the Federal Government and Indian tribes. This rule only affects some applicators of RUPs that are certified under an EPA federal plan by reducing their paperwork burden, and it is not expected to impact human health or the environment or impose any additional burden or restrictions, or otherwise affect Indian tribes. Thus, Executive Order 13175 does not apply to this action.

G. Executive Order 13045: Protection of Children From Environmental Health Risks and Safety Risks

EPA interprets Executive Order 13045 (62 FR 19885, April 23, 1997) as applying only to those regulatory actions that concern health or safety risks, such that the analysis required under section 5–501 of the Executive Order has the potential to influence the regulation. This action is not subject to Executive Order 13045 because it does not establish an environmental standard intended to mitigate health or safety risks, nor is it an ''economically significant regulatory action'' as defined by Executive Order 12866.

H. Executive Order 13211: Actions Concerning Regulations That Significantly Affect Energy Supply, Distribution, or Use

This action is not a ''significant regulatory action'' as defined in Executive Order 13211 (66 FR 28355, May 22, 2001), because it is not likely to have a significant adverse effect on the supply, distribution, or use of energy.

I. National Technology Transfer and Advancement Act (NTTAA)

This action does not involve technical standards that would require the consideration of voluntary consensus standards pursuant to section 12(d) of NTTAA (15 U.S.C. 272 note).

J. Executive Order 12898: Federal Actions To Address Environmental Justice in Minority Populations and Low-Income Populations

This action does not have disproportionately high and adverse human health or environmental effects on minority or low-income populations because it does not affect the level of protection provided to human health or the environment. Therefore, this action does not involve special consideration of environmental justice-related issues as specified in Executive Order 12898 (59 FR 7629, February 16, 1994).

VI. Congressional Review Act

Pursuant to the Congressional Review Act, 5 U.S.C. 801 *et seq.,* EPA will submit a report containing this rule and other required information to the U.S. Senate, the U.S. House of Representatives, and the Comptroller General of the United States prior to publication of the rule in the **Federal Register**. This rule is not a ''major rule'' as defined by 5 U.S.C. 804(2).

List of Subjects in 40 CFR Part 171

Environmental protection, Indian-lands, Intergovernmental relations, Pesticides and pests, Reporting and recordkeeping requirements.

Dated: June 21, 2012.

James Jones

Acting Assistant Administrator, Office of Chemical Safety and Pollution Prevention.

Therefore, 40 CFR chapter I is amended as follows:

PART 171—[AMENDED]

■ 1. The authority citation for part 171 continues to read as follows:

Authority: 7 U.S.C. 136i and 136w.

■ 2. Section 171.11 is amended by revising paragraph (e) to read as follows:

§ 171.11 Federal certification of pesticide applicators in States or on Indian Reservations where there is no approved State or Tribal certification plan in effect.

* * * * *

(e) *Recognition of other certificates.* The Administrator may issue a certificate to an individual possessing any other valid Federal, State, or Tribal certificate without further demonstration of competency. The individual shall submit the EPA certification form and written evidence of valid certification to the appropriate EPA Regional Office. The Administrator may deny issuance of such certificate if the standards of competency for each category or subcategory identified in the other Federal, State, or Tribal certificate are not sufficiently comparable to justify waiving further demonstration of competency. The Administrator may revoke, suspend, or modify such certificate if the Federal, State, or Tribal certificate upon which it is based is revoked, suspended, or modified. Unless suspended or revoked, a certificate issued under this paragraph is valid until the expiration date of the Federal, State, or Tribal certificate.

* * * * *

[FR Doc. 2012–16443 Filed 7–3–12; 8:45 am]

BILLING CODE 6560–50–P

DEPARTMENT OF HOMELAND SECURITY

Federal Emergency Management Agency

44 CFR Part 64

[Docket ID FEMA–2012–0003; Internal Agency Docket No. FEMA–8235]

Suspension of Community Eligibility

AGENCY: Federal Emergency Management Agency, DHS.

ACTION: Final rule.

SUMMARY: This rule identifies communities where the sale of flood insurance has been authorized under the National Flood Insurance Program (NFIP) that are scheduled for suspension on the effective dates listed within this rule because of noncompliance with the floodplain management requirements of the program. If the Federal Emergency Management Agency (FEMA) receives documentation that the community has adopted the required floodplain management measures prior to the effective suspension date given in this rule, the suspension will not occur and a notice of this will be provided by publication in the **Federal Register** on a subsequent date.

DATES: *Effective Dates:* The effective date of each community's scheduled suspension is the third date (''Susp.'') listed in the third column of the following tables.

FOR FURTHER INFORMATION CONTACT: If you want to determine whether a particular community was suspended on the suspension date or for further information, contact David Stearrett, Federal Insurance and Mitigation Administration, Federal Emergency Management Agency, 500 C Street SW., Washington, DC 20472, (202) 646–2953.

SUPPLEMENTARY INFORMATION: The NFIP enables property owners to purchase Federal flood insurance that is not otherwise generally available from private insurers. In return, communities agree to adopt and administer local floodplain management measures aimed at protecting lives and new construction from future flooding. Section 1315 of the National Flood Insurance Act of 1968, as amended, 42 U.S.C. 4022, prohibits the sale of NFIP flood

insurance unless an appropriate public body adopts adequate floodplain management measures with effective enforcement measures. The communities listed in this document no longer meet that statutory requirement for compliance with program regulations, 44 CFR part 59. Accordingly, the communities will be suspended on the effective date in the third column. As of that date, flood insurance will no longer be available in the community. We recognize that some of these communities may adopt and submit the required documentation of legally enforceable floodplain management measures after this rule is published but prior to the actual suspension date. These communities will not be suspended and will continue to be eligible for the sale of NFIP flood insurance. A notice withdrawing the suspension of such communities will be published in the **Federal Register**.

In addition, FEMA publishes a Flood Insurance Rate Map (FIRM) that identifies the Special Flood Hazard Areas (SFHAs) in these communities. The date of the FIRM, if one has been published, is indicated in the fourth column of the table. No direct Federal financial assistance (except assistance pursuant to the Robert T. Stafford Disaster Relief and Emergency Assistance Act not in connection with a flood) may be provided for construction or acquisition of buildings in identified SFHAs for communities not participating in the NFIP and identified for more than a year on FEMA's initial FIRM for the community as having flood-prone areas (section 202(a) of the Flood Disaster Protection Act of 1973, 42 U.S.C. 4106(a), as amended). This prohibition against certain types of Federal assistance becomes effective for the communities listed on the date shown in the last column. The Administrator finds that notice and public comment procedures under 5 U.S.C. 553(b), are impracticable and unnecessary because communities listed in this final rule have been adequately notified.

Each community receives 6-month, 90-day, and 30-day notification letters addressed to the Chief Executive Officer stating that the community will be suspended unless the required floodplain management measures are met prior to the effective suspension date. Since these notifications were made, this final rule may take effect within less than 30 days.

National Environmental Policy Act. This rule is categorically excluded from the requirements of 44 CFR part 10, Environmental Considerations. No environmental impact assessment has been prepared.

Regulatory Flexibility Act. The Administrator has determined that this rule is exempt from the requirements of the Regulatory Flexibility Act because the National Flood Insurance Act of 1968, as amended, Section 1315, 42 U.S.C. 4022, prohibits flood insurance coverage unless an appropriate public body adopts adequate floodplain management measures with effective enforcement measures. The communities listed no longer comply with the statutory requirements, and after the effective date, flood insurance will no longer be available in the communities unless remedial action takes place.

Regulatory Classification. This final rule is not a significant regulatory action under the criteria of section 3(f) of Executive Order 12866 of September 30, 1993, Regulatory Planning and Review, 58 FR 51735.

Executive Order 13132, Federalism. This rule involves no policies that have federalism implications under Executive Order 13132.

Executive Order 12988, Civil Justice Reform. This rule meets the applicable standards of Executive Order 12988.

Paperwork Reduction Act. This rule does not involve any collection of information for purposes of the Paperwork Reduction Act, 44 U.S.C. 3501 *et seq.*

List of Subjects in 44 CFR Part 64

Flood insurance, Floodplains.

Accordingly, 44 CFR part 64 is amended as follows:

PART 64—[AMENDED]

■ 1. The authority citation for part 64 continues to read as follows:

Authority: 42 U.S.C. 4001 *et seq.;* Reorganization Plan No. 3 of 1978, 3 CFR, 1978 Comp.; p. 329; E.O. 12127, 44 FR 19367, 3 CFR, 1979 Comp.; p. 376.

§ 64.6 [Amended]

■ 2. The tables published under the authority of § 64.6 are amended as follows:

State and location	Community No.	Effective date authorization/cancellation of sale of flood insurance in community	Current effective map date	Date certain federal assistance no longer available in SFHAs
Region I				
Massachusetts:				
Amesbury, City of, Essex County	250075	August 7, 1975, Emerg; June 18, 1980, Reg; July 3, 2012, Susp.	July 3, 2012	July 3, 2012.
Andover, Town of, Essex County	250076	February 18, 1972, Emerg; August 1, 1978, Reg; July 3, 2012, Susp.	.....do*	Do.
Beverly, City of, Essex County	250077	August 16, 1974, Emerg; March 18, 1986, Reg; July 3, 2012, Susp.	.....do	Do.
Boxford, Town of, Essex County	250078	September 15, 1975, Emerg; June 3, 1991, Reg; July 3, 2012, Susp.	.....do	Do.
Danvers, Town of, Essex County	250079	July 22, 1975, Emerg; July 2, 1980, Reg; July 3, 2012, Susp.	.....do	Do.
Essex, Town of, Essex County	250080	November 14, 1973, Emerg; July 17, 1986, Reg; July 3, 2012, Susp.	.....do	Do.
Georgetown, Town of, Essex County	250081	July 31, 1975, Emerg; June 4, 1980, Reg; July 3, 2012, Susp.	.....do	Do.
Gloucester, City of, Essex County	250082	December 1, 1972, Emerg; January 17, 1986, Reg; July 3, 2012, Susp.	.....do	Do.
Groveland, Town of, Essex County	250083	June 19, 1975, Emerg; October 1, 1980, Reg; July 3, 2012, Susp.	.....do	Do.
Hamilton, Town of, Essex County	250084	N/A, Emerg; July 26, 1993, Reg; July 3, 2012, Susp.	.....do	Do.
Haverhill, City of, Essex County	250085	April 30, 1974, Emerg; February 16, 1993, Reg; July 3, 2012, Susp.	.....do	Do.
Ipswich, Town of, Essex County	250086	July 30, 1975, Emerg; August 5, 1985, Reg; July 3, 2012, Susp.	.....do	Do.
Lawrence, City of, Essex County	250087	July 2, 1974, Emerg; August 2, 1982, Reg; July 3, 2012, Susp.	.....do	Do.

State and location	Community No.	Effective date authorization/cancellation of sale of flood insurance in community	Current effective map date	Date certain federal assistance no longer available in SFHAs
Lynn, City of, Essex County	250088	August 9, 1974, Emerg; February 1, 1985, Reg; July 3, 2012, Susp.	.....do	Do.
Lynnfield, Town of, Essex County	250089	September 6, 1974, Emerg; February 1, 1980, Reg; July 3, 2012, Susp.	.....do	Do.
Manchester by the Sea, Town of, Essex County	250090	January 15, 1974, Emerg; September 4, 1986, Reg; July 3, 2012, Susp.	.....do	Do.
Marblehead, Town of, Essex County	250091	January 16, 1974, Emerg; July 3, 1985, Reg; July 3, 2012, Susp.	.....do	Do.
Merrimac, Town of, Essex County	250092	February 7, 1975, Emerg; July 5, 1982, Reg; July 3, 2012, Susp.	.....do	Do.
Methuen, City of, Essex County	250093	June 26, 1974, Emerg; July 2, 1980, Reg; July 3, 2012, Susp.	.....do	Do.
Middleton, Town of, Essex County	250094	February 19, 1976, Emerg; November 5, 1980, Reg; July 3, 2012, Susp.	.....do	Do.
Nahant, Town of, Essex County	250095	September 22, 1972, Emerg; July 19, 1976, Reg; July 3, 2012, Susp.	.....do	Do.
Newbury, Town of, Essex County	250096	October 6, 1972, Emerg; March 15, 1977, Reg; July 3, 2012, Susp.	.....do	Do.
Newburyport, City of, Essex County	250097	October 6, 1972, Emerg; February 15, 1978, Reg; July 3, 2012, Susp.	.....do	Do.
North Andover, Town of, Essex County	250098	July 2, 1975, Emerg; June 15, 1983, Reg; July 3, 2012, Susp.	.....do	Do.
Peabody, City of, Essex County	250099	July 29, 1975, Emerg; May 15, 1980, Reg; July 3, 2012, Susp.	.....do	Do.
Rockport, Town of, Essex County	250100	July 28, 1975, Emerg; June 19, 1985, Reg; July 3, 2012, Susp.	.....do	Do.
Rowley, Town of, Essex County	250101	N/A, Emerg; December 3, 2009, Reg; July 3, 2012, Susp.	.....do	Do.
Salem, City of, Essex County	250102	June 23, 1972, Emerg; March 15, 1977, Reg; July 3, 2012, Susp.	.....do	Do.
Salisbury, Town of, Essex County	250103	November 17, 1972, Emerg; May 2, 1977, Reg; July 3, 2012, Susp.	.....do	Do.
Saugus, Town of, Essex County	250104	August 25, 1975, Emerg; January 19, 1983, Reg; July 3, 2012, Susp.	.....do	Do.
Swampscott, Town of, Essex County	250105	September 29, 1972, Emerg; September 3, 1976, Reg; July 3, 2012, Susp.	.....do	Do.
Topsfield, Town of, Essex County	250106	September 26, 1975, Emerg; June 4, 1980, Reg; July 3, 2012, Susp.	.....do	Do.
Wenham, Town of, Essex County	250107	July 23, 1975, Emerg; June 19, 1989, Reg; July 3, 2012, Susp.	.....do	Do.
West Newbury, Town of, Essex County	250108	August 16, 1974, Emerg; June 15, 1979, Reg; July 3, 2012, Susp.	.....do	Do.
Region III				
Pennsylvania: Albany, Township of, Berks County.	421046	November 19, 1975, Emerg; September 30, 1988, Reg; July 3, 2012, Susp.	.....do	Do.
Alsace, Township of, Berks County	421376	May 27, 1975, Emerg; April 1, 1981, Reg; July 3, 2012, Susp.	.....do	Do.
Amity, Township of, Berks County	420124	April 12, 1973, Emerg; July 18, 1977, Reg; July 3, 2012, Susp.	.....do	Do.
Bally, Borough of, Berks County	420125	N/A, Emerg; August 1, 2001, Reg; July 3, 2012, Susp.	.....do	Do.
Bechtelsville, Borough of, Berks County	420126	April 7, 1975, Emerg; May 15, 1984, Reg; July 3, 2012, Susp.	.....do	Do.
Bern, Township of, Berks County	421050	March 25, 1974, Emerg; November 19, 1980, Reg; July 3, 2012, Susp.	.....do	Do.
Bernville, Borough of, Berks County	421051	January 6, 1976, Emerg; January 26, 1983, Reg; July 3, 2012, Susp.	.....do	Do.
Bethel, Township of, Berks County	421052	June 19, 1978, Emerg; July 15, 1988, Reg; July 3, 2012, Susp.	.....do	Do.
Birdsboro, Borough of, Berks County	420127	December 29, 1972, Emerg; December 18, 1979, Reg; July 3, 2012, Susp.	.....do	Do.
Boyertown, Borough of, Berks County	420128	July 18, 1975, Emerg; June 25, 1976, Reg; July 3, 2012, Susp.	.....do	Do.
Brecknock, Township of, Berks County	421053	November 24, 1975, Emerg; June 15, 1981, Reg; July 3, 2012, Susp.	.....do	Do.
Caernarvon, Township of, Berks County	421055	November 26, 1974, Emerg; January 16, 1981, Reg; July 3, 2012, Susp.	.....do	Do.
Centerport, Borough of, Berks County	420129	August 31, 1978, Emerg; July 16, 1982, Reg; July 3, 2012, Susp.	.....do	Do.
Centre, Township of, Berks County	421056	October 4, 1977, Emerg; December 16, 1980, Reg; July 3, 2012, Susp.	.....do	Do.
Colebrookdale, Township of, Berks County	421057	May 2, 1975, Emerg; May 1, 1984, Reg; July 3, 2012, Susp.	.....do	Do.
Cumru, Township of, Berks County	420130	November 24, 1972, Emerg; January 3, 1979, Reg; July 3, 2012, Susp.	.....do	Do.
District, Township of, Berks County	421378	November 21, 1975, Emerg; August 19, 1985, Reg; July 3, 2012, Susp.	.....do	Do.
Exeter, Township of, Berks County	421063	September 27, 1974, Emerg; March 15, 1982, Reg; July 3, 2012, Susp.	.....do	Do.
Greenwich, Township of, Berks County	421067	August 21, 1975, Emerg; February 17, 1989, Reg; July 3, 2012, Susp.	.....do	Do.

State and location	Community No.	Effective date authorization/cancellation of sale of flood insurance in community	Current effective map date	Date certain federal assistance no longer available in SFHAs
Hamburg, Borough of, Berks County	420134	May 1, 1973, Emerg; February 15, 1980, Reg; July 3, 2012, Susp.	.....do	Do.
Heidelberg, Township of, Berks County	421069	March 7, 1977, Emerg; May 3, 1990, Reg; July 3, 2012, Susp.	.....do	Do.
Hereford, Township of, Berks County	421379	November 20, 1975, Emerg; May 3, 1990, Reg; July 3, 2012, Susp.	.....do	Do.
Jefferson, Township of, Berks County	421071	June 24, 1976, Emerg; September 1, 1987, Reg; July 3, 2012, Susp.	.....do	Do.
Kenhorst, Borough of, Berks County	420135	December 29, 1972, Emerg; February 15, 1978, Reg; July 3, 2012, Susp.	.....do	Do.
Kutztown, Borough of, Berks County	420136	June 30, 1972, Emerg; May 2, 1977, Reg; July 3, 2012, Susp.	.....do	Do.
Leesport, Borough of, Berks County	420138	December 26, 1973, Emerg; May 16, 1977, Reg; July 3, 2012, Susp.	.....do	Do.
Lenhartsville, Borough of, Berks County	420139	August 25, 1975, Emerg; February 17, 1989, Reg; July 3, 2012, Susp.	.....do	Do.
Longswamp, Township of, Berks County	421380	November 24, 1975, Emerg; July 3, 1990, Reg; July 3, 2012, Susp.	.....do	Do.
Lower Heidelberg, Township of, Berks County	421077	July 18, 1975, Emerg; August 16, 1982, Reg; July 3, 2012, Susp.	.....do	Do.
Maidencreek, Township of, Berks County	421078	June 9, 1975, Emerg; March 16, 1981, Reg; July 3, 2012, Susp.	.....do	Do.
Marion, Township of, Berks County	421079	October 28, 1975, Emerg; January 2, 1981, Reg; July 3, 2012, Susp.	.....do	Do.
Maxatawny, Township of, Berks County	421381	December 3, 1975, Emerg; November 5, 1980, Reg; July 3, 2012, Susp.	.....do	Do.
Mohnton, Borough of, Berks County	420142	January 23, 1974, Emerg; July 2, 1980, Reg; July 3, 2012, Susp.	.....do	Do.
Muhlenberg, Township of, Berks County	420144	March 9, 1973, Emerg; September 1, 1977, Reg; July 3, 2012, Susp.	.....do	Do.
New Morgan, Borough of, Berks County	422755	N/A, Emerg; April 20, 1998, Reg; July 3, 2012, Susp.	.....do	Do.
North Heidelberg, Township of, Berks County	421086	December 23, 1976, Emerg; March 18, 1983, Reg; July 3, 2012, Susp.	.....do	Do.
Oley, Township of, Berks County	420965	January 15, 1974, Emerg; September 14, 1990, Reg; July 3, 2012, Susp.	.....do	Do.
Ontelaunee, Township of, Berks County	420966	September 5, 1973, Emerg; June 1, 1977, Reg; July 3, 2012, Susp.	.....do	Do.
Penn, Township of, Berks County	421091	July 2, 1975, Emerg; July 15, 1988, Reg; July 3, 2012, Susp.	.....do	Do.
Perry, Township of, Berks County	421093	September 12, 1975, Emerg; August 16, 1982, Reg; July 3, 2012, Susp.	.....do	Do.
Pike, Township of, Berks County	421382	December 10, 1974, Emerg; July 18, 1983, Reg; July 3, 2012, Susp.	.....do	Do.
Reading, City of, Berks County	420145	October 29, 1971, Emerg; September 29, 1978, Reg; July 3, 2012, Susp.	.....do	Do.
Richmond, Township of, Berks County	421096	August 28, 1975, Emerg; September 17, 1982, Reg; July 3, 2012, Susp.	.....do	Do.
Robeson, Township of, Berks County	420146	December 29, 1972, Emerg; September 3, 1980, Reg; July 3, 2012, Susp.	.....do	Do.
Robesonia, Borough of, Berks County	420147	January 21, 1975, Emerg; June 18, 1990, Reg; July 3, 2012, Susp.	.....do	Do.
Rockland, Township of, Berks County	421098	July 29, 1975, Emerg; September 2, 1988, Reg; July 3, 2012, Susp.	.....do	Do.
Roscombmanor, Township of, Berks County	421099	August 6, 1975, Emerg; February 2, 1989, Reg; July 3, 2012, Susp.	.....do	Do.
Saint Lawrence, Borough of, Berks County	420151	June 13, 1975, Emerg; December 16, 1980, Reg; July 3, 2012, Susp.	.....do	Do.
Shillington, Borough of, Berks County	420148	November 5, 1971, Emerg; August 1, 1977, Reg; July 3, 2012, Susp.	.....do	Do.
Shoemakersville, Borough of, Berks County	420149	March 26, 1974, Emerg; June 15, 1979, Reg; July 3, 2012, Susp.	.....do	Do.
Sinking Spring, Borough of, Berks County	420150	May 30, 1974, Emerg; August 16, 1982, Reg; July 3, 2012, Susp.	.....do	Do.
South Heidelberg, Township of, Berks County	421107	April 4, 1974, Emerg; May 17, 1990, Reg; July 3, 2012, Susp.	.....do	Do.
Spring, Township of, Berks County	421108	June 27, 1974, Emerg; April 18, 1983, Reg; July 3, 2012, Susp.	.....do	Do.
Strausstown, Borough of, Berks County	420152	July 31, 1979, Emerg; February 11, 1983, Reg; July 3, 2012, Susp.	.....do	Do.
Tilden, Township of, Berks County	421112	April 7, 1975, Emerg; July 16, 1980, Reg; July 3, 2012, Susp.	.....do	Do.
Topton, Borough of, Berks County	420154	July 25, 1975, Emerg; July 16, 1990, Reg; July 3, 2012, Susp.	.....do	Do.
Union, Township of, Berks County	420155	July 9, 1973, Emerg; August 15, 1977, Reg; July 3, 2012, Susp.	.....do	Do.
Upper Bern, Township of, Berks County	421118	May 8, 1979, Emerg; November 5, 1982, Reg; July 3, 2012, Susp.	.....do	Do.
Washington, Township of, Berks County	421383	September 12, 1977, Emerg; June 1, 1984, Reg; July 3, 2012, Susp.	.....do	Do.
Wernersville, Borough of, Berks County	421374	July 10, 1975, Emerg; August 2, 1982, Reg; July 3, 2012, Susp.	.....do	Do.

State and location	Community No.	Effective date authorization/cancellation of sale of flood insurance in community	Current effective map date	Date certain federal assistance no longer available in SFHAs
West Reading, Borough of, Berks County	420156	September 3, 1971, Emerg; March 16, 1976, Reg; July 3, 2012, Susp.	.....do	Do.
Windsor, Township of, Berks County	421125	April 17, 1975, Emerg; December 16, 1980, Reg; July 3, 2012, Susp.	.....do	Do.
Womelsdorf, Borough of, Berks County	420157	March 7, 1977, Emerg; October 15, 1985, Reg; July 3, 2012, Susp.	.....do	Do.
Region IV				
Georgia:				
Hamilton, City of, Harris County	130594	July 15, 2010, Emerg; N/A, Reg; July 3, 2012, Susp.	.....do	Do.
Harris County, Unincorporated Areas	130338	December 3, 1986, Emerg; December 5, 1990, Reg; July 3, 2012, Susp.	.....do	Do.
Hogansville, City of, Troup County	130176	June 18, 1975, Emerg; August 4, 1987, Reg; July 3, 2012, Susp.	.....do	Do.
LaGrange, City of, Troup County	130177	February 5, 1974, Emerg; December 1, 1978, Reg; July 3, 2012, Susp.	.....do	Do.
Manchester, City of, Meriwether and Talbot Counties.	130225	December 29, 1975, Emerg; August 5, 1986, Reg; July 3, 2012, Susp.	.....do	Do.
Meriwether County, Unincorporated Areas	130473	June 25, 1986, Emerg; July 16, 1990, Reg; July 3, 2012, Susp.	.....do	Do.
Talbot County, Unincorporated Areas	130396	May 30, 1979, Emerg; September 4, 1986, Reg; July 3, 2012, Susp.	.....do	Do.
Troup County, Unincorporated Areas	130405	September 19, 1975, Emerg; December 5, 1990, Reg; July 3, 2012, Susp.	.....do	Do.
Waverly Hall, Town of, Harris County	130240	August 26, 1975, Emerg; August 1, 1986, Reg; July 3, 2012, Susp.	.....do	Do.
West Point, City of, Harris and Troup Counties	130178	March 3, 1975, Emerg; January 6, 1983, Reg; July 3, 2012, Susp.	.....do	Do.
Woodland, City of, Talbot County	130397	October 28, 1975, Emerg; June 25, 1976, Reg; July 3, 2012, Susp.	.....do	Do.
Tennessee: Benton County, Unincorporated Areas.	470218	October 4, 1989, Emerg; July 2, 1991, Reg; July 3, 2012, Susp.	.....do	Do.
Big Sandy, Town of, Benton County	470295	N/A, Emerg; November 26, 2008, Reg; July 3, 2012, Susp.	.....do	Do.
Camden, City of, Benton County	470010	April 2, 1975, Emerg; July 17, 1986, Reg; July 3, 2012, Susp.	.....do	Do.
Region VI				
Texas:				
Cottonwood, City of, Kaufman County	480292	June 18, 2010, Emerg; N/A, Reg; July 3, 2012, Susp.	.....do	Do.
Crandall, City of, Kaufman County	480409	March 12, 1992, Emerg; November 1, 1992, Reg; July 3, 2012, Susp.	.....do	Do.
Dallas, City of, Collin, Dallas, Denton, Kaufman and Rockwall Counties.	480171	June 30, 1970, Emerg; March 16, 1983, Reg; July 3, 2012, Susp.	.....do	Do.
Forney, City of, Kaufman County	480410	April 8, 1975, Emerg; August 8, 1978, Reg; July 3, 2012, Susp.	.....do	Do.
Heath, City of, Kaufman and Rockwall County	480545	November 11, 1977, Emerg; February 1, 1980, Reg; July 3, 2012, Susp.	.....do	Do.
Kaufman, City of, Kaufman County	480407	May 16, 1975, Emerg; August 8, 1978, Reg; July 3, 2012, Susp.	.....do	Do.
Kaufman County, Unincorporated Areas	480411	September 26, 1989, Emerg; September 4, 1991, Reg; July 3, 2012, Susp.	.....do	Do.
Kemp, City of, Kaufman County	480412	September 16, 1980, Emerg; September 16, 1980, Reg; July 3, 2012, Susp.	.....do	Do.
Mabank, City of, Henderson and Kaufman Counties.	480414	February 22, 1977, Emerg; August 8, 1978, Reg; July 3, 2012, Susp.	.....do	Do.
McLendon-Chisholm, City of, Kaufman and Rockwall Counties.	480546	February 21, 1997, Emerg; September 26, 2008, Reg; July 3, 2012, Susp.	.....do	Do.
Mesquite, City of, Dallas and Kaufman Counties.	485490	July 24, 1970, Emerg; July 30, 1971, Reg; July 3, 2012, Susp.	.....do	Do.
Oak Ridge, Town of, Kaufman County	481534	October 5, 2010, Emerg; N/A, Reg; July 3, 2012, Susp.	.....do	Do.
Scurry, City of, Kaufman County	480241	October 12, 2010, Emerg; N/A, Reg; July 3, 2012, Susp.	.....do	Do.
Seagoville, City of, Dallas and Kaufman Counties.	480187	June 25, 1975, Emerg; June 15, 1981, Reg; July 3, 2012, Susp.	.....do	Do.
Seven Points, City of, Henderson and Kaufman Counties.	480332	N/A, Emerg; August 23, 2001, Reg; July 3, 2012, Susp.	.....do	Do.
Talty, Town of, Kaufman County	480468	N/A, Emerg; January 6, 2010, Reg; July 3, 2012, Susp.	.....do	Do.
Terrell, City of, Kaufman County	480416	June 18, 1976, Emerg; September 30, 1980, Reg; July 3, 2012, Susp.	.....do	Do.
Region VIII				
Colorado: Fremont County, Unincorporated Areas	080067	June 25, 1975, Emerg; September 29, 1989, Reg; July 3, 2012, Susp.	.....do	Do.

*do = Ditto.
Code for reading third column: Emerg.—Emergency; Reg.—Regular; Susp.—Suspension.

Dated: June 20, 2012.

David L. Miller,

Associate Administrator, Federal Insurance and Mitigation Administration, Department of Homeland Security, Federal Emergency Management Agency.

[FR Doc. 2012–16348 Filed 7–3–12; 8:45 am]

BILLING CODE 9110–12–P

DEPARTMENT OF COMMERCE

National Oceanic and Atmospheric Administration

50 CFR Part 622

[Docket No. 120213124–1066–02]

RIN 0648–XC088

Fisheries of the Caribbean, Gulf of Mexico, and South Atlantic; Reef Fish Fishery of the Gulf of Mexico; Extension of the 2012 Gulf of Mexico Recreational Red Snapper Season

AGENCY: National Marine Fisheries Service (NMFS), National Oceanic and Atmospheric Administration (NOAA), Commerce.

ACTION: Temporary rule; extension.

SUMMARY: NMFS extends the recreational fishing season for the red snapper component of the reef fish fishery in the exclusive economic zone (EEZ) of the Gulf of Mexico (Gulf). NMFS previously determined the recreational red snapper quota would be reached by 12:01 a.m., local time, July 11, 2012. However, due to severe weather conditions in the central and northeastern Gulf during the first 26 days in June, fishing opportunities were restricted during the beginning of the recreational fishing season. NMFS has projected the quota will not be reached by the current closure date. Therefore, NMFS is extending the recreational red snapper fishing season for 6 days to allow the remainder of the quota to be harvested. The intent of this action is to provide fishermen the opportunity to harvest the recreational red snapper quota, and the opportunity to achieve the optimum yield for the fishery, thus enhancing social and economic benefits to the fishery.

DATES: The extension is effective from 12:01 a.m., local time, July 11, 2012, until 12:01 a.m., local time, July 17, 2012. The season will then be closed until it reopens on June 1, 2013, the beginning of the 2013 recreational fishing season.

FOR FURTHER INFORMATION CONTACT: Steve Branstetter, 727–824–5305.

SUPPLEMENTARY INFORMATION: The Gulf reef fish fishery is managed under the Fishery Management Plan for the Reef Fish Resources of the Gulf of Mexico (FMP). The FMP was prepared by the Gulf of Mexico Fishery Management Council (Council) and is implemented through regulations at 50 CFR part 622 under the authority of the Magnuson-Stevens Fishery Conservation and Management Act (Magnuson-Stevens Act).

On June 29, 2012, NMFS implemented a recreational quota for Gulf red snapper of 3.959 million lb (1.796 million kg) and a commercial quota of 4.121 million lb (1.869 million kg) through a regulatory amendment (77 FR 31734, May 30, 2012). These quotas are based on the Council's established acceptable biological catch of 8.080 million lb (3.665 million kg) for the 2012 fishing year, and the allocation ratios in the FMP.

The Magnuson-Stevens Act requires NMFS to close the recreational red snapper component of the Gulf reef fish fishery in Federal waters when the quota is met or projected to be met. Based on 2011 recreational landings data, NMFS projected the recreational quota would be met on or by July 10, 2012. Therefore, in the rule that published May 30, 2012 (77 FR 31734), NMFS announced the recreational red snapper fishing season would close at 12:01 a.m., local time, July 11, 2012, which constituted a 40-day fishing season.

Landings and effort data are not available in-season to determine if the quota will be met on July 10, 2012. However, the central and northeastern Gulf experienced severe weather conditions during the first 26 days of the 2012 recreational red snapper fishing season and it is likely that fishing effort and landings are less than projected. In addition to tropical storm Debby in late June, poor weather conditions persisted prior to that time in the central and northeastern Gulf. The majority of recreational harvest in the Gulf comes from the northern and central parts of the Gulf. Weather data from four buys stationed throughout the Gulf were used as proxies for determining days when fishing did not occur or when effort was reduced. Wave heights and wind speeds have been greater in June 2012 than June 2011 for all areas of the Gulf, except Texas. Because of this reduced effort, NMFS has projected the recreational red snapper quota will not be met by the July 11, 2012, closing date. Based on the assumption that weather will improve over the next 2 to 3 weeks and, thus, fishing effort will return to expected rates, NMFS projects the recreational red snapper season can be extended for an additional 6 days, and will close at 12:01 a.m. local time on July 17, 2012. The season will then be closed until 12:01 a.m., local time, June 1, 2013, the beginning of the 2013 recreational fishing season.

During the open period, the bag and possession limit for recreational Gulf red snapper is two fish. However, no red snapper may be retained by the captain and crew of a vessel operating as a charter vessel or headboat. The bag limit for such captain and crew is zero.

During the closed period, the bag and possession limit for recreational Gulf red snapper is zero. A person aboard a vessel for which a Federal charter vessel/headboat permit for Gulf reef fish has been issued, must also abide by these closure provisions in state waters.

Classification

This action responds to the best available information recently obtained from the fishery. The Assistant Administrator for Fisheries, NOAA, (AA), finds good cause to waive the requirement to provide prior notice and opportunity for public comment pursuant to the authority set forth at 5 U.S.C. 553(b)(3)(B). Allowing prior notice and opportunity for public comment on the season extension is unnecessary because the rule establishing the annual quota has already been subject to notice and comment, and all that remains is to notify the public that additional harvest remains in the established quota and, therefore, the fishery will be extended for a limited time.

This rule relieves a restriction by extending the recreational red snapper fishing season. Because it relieves a restriction, this rule is not subject to the 30-day delayed effectiveness provision of the Administrative Procedures Act pursuant to 5 U.S.C. 553(d)(1).

This action is taken under 50 CFR 622.43(a) and is exempt from review under Executive Order 12866.

Authority: 16 U.S.C. 1801 *et seq.*

Dated: June 29, 2012.

James P. Burgess,

Acting Director, Office of Sustainable Fisheries, National Marine Fisheries Service.

[FR Doc. 2012–16480 Filed 6–29–12; 4:15 pm]

BILLING CODE 3510–22–P

DEPARTMENT OF COMMERCE

National Oceanic and Atmospheric Administration

50 CFR Part 635

[Docket No. 100622276–0569–02]

RIN 0648–XC080

Atlantic Highly Migratory Species; Commercial Gulf of Mexico Non-Sandbar Large Coastal Shark Fishery

AGENCY: National Marine Fisheries Service (NMFS), National Oceanic and Atmospheric Administration (NOAA), Commerce.

ACTION: Temporary rule; closure.

SUMMARY: NMFS is closing the commercial fishery for non-sandbar large coastal sharks (LCS) in the Gulf of Mexico region. This action is necessary because the commercial landings for the 2012 fishing season are projected to reach at least 80 percent of the available commercial quota by June 30, 2012.

DATES: The commercial non-sandbar LCS fishery is closed effective 11:30 p.m. local time July 6, 2012, until December 31, 2012, or if NMFS announces, via a notice in the **Federal Register**, that additional quota is available and the season is reopened.

FOR FURTHER INFORMATION CONTACT: Karyl Brewster-Geisz or Peter Cooper 301–427–8503; fax 301–713–1917.

SUPPLEMENTARY INFORMATION: The Atlantic shark fisheries are managed under the 2006 Consolidated Atlantic Highly Migratory Species (HMS) Fishery Management Plan (FMP), its amendments, and its implementing regulations (50 CFR part 635) issued under authority of the Magnuson-Stevens Fishery Conservation and Management Act (16 U.S.C. 1801 *et seq.*).

Under § 635.5(b)(1), shark dealers are required to report to NMFS all sharks landed every two weeks. Dealer reports for fish received between the 1st and 15th of any month must be received by NMFS by the 25th of that month. Dealer reports for fish received between the 16th and the end of any month must be received by NMFS by the 10th of the following month. Under § 635.28(b)(2), when NMFS projects that fishing season landings for a specific shark quota have reached or are projected to reach 80 percent of the available quota, NMFS will file for publication with the Office of the Federal Register a notification of closure for that shark species group, which will be effective no fewer than 5 days after the date of filing. From the effective date and time of the closure until NMFS announces, via a notice in the **Federal Register**, that additional quota is available and the season is reopened, the fishery for that specific quota is closed, even across fishing years.

On January 24, 2012 (77 FR 3393), NMFS announced that the non-sandbar LCS fishery for the Gulf of Mexico region for the 2012 fishing year would open on February 15 with a quota of 392.8 metric tons (mt) dressed weight (dw) (866,063 lb dw). Dealer reports through June 15 2012, indicate that 295.9 mt dw or 75.3 percent of the available quota for non-sandbar LCS has been taken. Dealer reports received to date indicate that 20 percent of the quota was landed from the opening of the fishery on February 15, 2012, through March 6, 2012; 16 percent of the quota was landed from March 7, 2012, through March 28, 2012; 21 percent was landed from March 29, 2012, through April 17, 2012; 11 percent of the quota was landed from April 18, 2012, through May 17, 2012; and 7.3 percent was landed from May 18, 2012, through June 15, 2012. Based on the rate of fishing effort indicated by these preliminary dealer reports, NMFS estimates that an additional 9 to 14 percent of the quota could be taken from June 15 through June 30, 2012, thus reaching or exceeding the 80-percent limit specified for a closure notice in the regulations. Accordingly, NMFS is closing the commercial non-sandbar LCS fishery in the Gulf of Mexico region as of 11:30 p.m. local time July 6, 2012. All other shark fisheries remain open, except the commercial porbeagle fishery, which closed on May 30, 2012 (77 FR 32036).

At § 635.27(b)(1)(ii), the boundary between the Gulf of Mexico region and the Atlantic region is defined as a line beginning on the East Coast of Florida at the mainland at 25°20.4′ N. lat, proceeding due east. Any water and land to the south and west of that boundary is considered, for the purposes of quota monitoring and setting of quotas, to be within the Gulf of Mexico region.

During the closure, retention of non-sandbar LCS sharks in the Gulf of Mexico region is prohibited for persons fishing aboard vessels issued a commercial shark limited access permit under 50 CFR 635.4—unless, that is, the vessel is properly permitted to operate as a charter vessel or headboat for HMS and is engaged in a for-hire trip, in which case the recreational retention limits for sharks and ''no sale'' provisions apply (50 CFR 635.22(a) and (c)), or if the vessel possesses a valid shark research permit under § 635.32 and a NMFS-approved observer is onboard. A shark dealer issued a permit pursuant to § 635.4 may not purchase or receive non-sandbar LCS in the Gulf of Mexico region from a vessel issued an Atlantic Shark Limited Access Permit (LAP), except that a permitted shark dealer or processor may possess non-sandbar LCS that were harvested, off-loaded, and sold, traded, or bartered, prior to the effective date of the closure and were held in storage consistent with § 635.28(b)(4). However, a permitted shark dealer or processor may possess non-sandbar LCS that were harvested by a vessel issued a valid shark research fishery permit per § 635.32 with a NMFS-approved observer onboard during the trip the sharks were taken on as long as the non-sandbar shark research fishery remains open. Under this closure, a shark dealer issued a permit pursuant to § 635.4 may, in accordance with state regulations, purchase or receive a non-sandbar LCS in the Gulf of Mexico region if the sharks were harvested, off-loaded, and sold, traded, or bartered from a vessel that fishes only in state waters and that has not been issued an Atlantic Shark LAP, HMS Angling permit, or HMS Charter/Headboat permit pursuant to § 635.4.

Classification

Pursuant to 5 U.S.C. 553(b)(B), the Assistant Administrator for Fisheries, NOAA (AA), finds that providing prior notice and public comment for this action is impracticable and contrary to the public interest because the fishery is currently underway and any delay in this action would result in overharvest of the quota and be inconsistent with management requirements and objectives. Similarly, affording prior notice and opportunity for public comment on this action is contrary to the public interest because if the quota is exceeded, the stock may be negatively affected and fishermen ultimately could experience reductions in the available quota and a lack of fishing opportunities in future seasons. For these reasons, the AA also finds good cause to waive the 30-day delay in effective date pursuant to 5 U.S.C. 553(d)(3). This action is required under § 635.28(b)(2) and is exempt from review under Executive Order 12866.

Authority: 16 U.S.C. 1801 *et seq.*

Dated: June 29, 2012.

Emily H. Menashes,

Acting Director, Office of Sustainable Fisheries, National Marine Fisheries Service.

[FR Doc. 2012–16481 Filed 6–29–12; 4:15 pm]

BILLING CODE 3510–22–P

DEPARTMENT OF COMMERCE

National Oceanic and Atmospheric Administration

50 CFR Part 679

[Docket No. 111207737–2141–02]

RIN 0648–XC087

Fisheries of the Exclusive Economic Zone Off Alaska; ''Other Rockfish'' in the Western Regulatory Area of the Gulf of Alaska

AGENCY: National Marine Fisheries Service (NMFS), National Oceanic and Atmospheric Administration (NOAA), Commerce.

ACTION: Temporary rule; closure.

SUMMARY: NMFS is prohibiting retention of ''other rockfish'' in the Western Regulatory Area of the Gulf of Alaska (GOA). This action is necessary because the 2012 total allowable catch (TAC) of ''other rockfish'' in the Western Regulatory Area of the GOA has been reached.

DATES: Effective 1200 hrs, Alaska local time (A.l.t.), July 2, 2012, through 2400 hrs, A.l.t., December 31, 2012.

FOR FURTHER INFORMATION CONTACT: Steve Whitney, 907–586–7269.

SUPPLEMENTARY INFORMATION: NMFS manages the groundfish fishery in the GOA exclusive economic zone according to the Fishery Management Plan for Groundfish of the Gulf of Alaska (FMP) prepared by the North Pacific Fishery Management Council under authority of the Magnuson-Stevens Fishery Conservation and Management Act. Regulations governing fishing by U.S. vessels in accordance with the FMP appear at subpart H of 50 CFR part 600 and 50 CFR part 679.

The 2012 TAC of ''other rockfish'' in the Western Regulatory Area of the GOA is 44 metric tons (mt) as established by the final 2012 and 2013 harvest specifications for groundfish of the GOA (77 FR 15194, March 14, 2012).

In accordance with § 679.20(d)(2), the Administrator, Alaska Region, NMFS (Regional Administrator), has determined that the 2012 TAC of ''other rockfish'' in the Western Regulatory Area of the GOA will be achieved. Therefore, NMFS is requiring that ''other rockfish'' caught in the Western Regulatory Area of the GOA be treated as prohibited species in accordance with § 679.21(b).

''Other rockfish'' in the Western Regulatory Area of the GOA means slope and demersal shelf rockfish.

Classification

This action responds to the best available information recently obtained from the fishery. The Acting Assistant Administrator for Fisheries, NOAA (AA), finds good cause to waive the requirement to provide prior notice and opportunity for public comment pursuant to the authority set forth at 5 U.S.C. 553(b)(B) as such requirement is impracticable and contrary to the public interest. This requirement is impracticable and contrary to the public interest as it would prevent NMFS from responding to the most recent fisheries data in a timely fashion and would delay prohibiting the retention of ''other rockfish'' in the Western Regulatory Area of the GOA. NMFS was unable to publish a notice providing time for public comment because the most recent, relevant data only became available as of July 28, 2012.

The AA also finds good cause to waive the 30-day delay in the effective date of this action under 5 U.S.C. 553(d)(3). This finding is based upon the reasons provided above for waiver of prior notice and opportunity for public comment.

This action is required by § 679.20 and § 679.21 and is exempt from review under Executive Order 12866.

Authority: 16 U.S.C. 1801 *et seq.*

Dated: June 29, 2012.

James P. Burgess,

Acting Director, Office of Sustainable Fisheries, National Marine Fisheries Service.

[FR Doc. 2012–16477 Filed 6–29–12; 4:15 pm]

BILLING CODE 3510–22–P

DEPARTMENT OF COMMERCE

National Oceanic and Atmospheric Administration

50 CFR Part 679

[Docket No. 111207737–2141–02]

RIN 0648–XC086

Fisheries of the Exclusive Economic Zone Off Alaska; Pacific Ocean Perch in the Western Regulatory Area of the Gulf of Alaska

AGENCY: National Marine Fisheries Service (NMFS), National Oceanic and Atmospheric Administration (NOAA), Commerce.

ACTION: Temporary rule; closure.

SUMMARY: NMFS is prohibiting directed fishing for Pacific ocean perch in the Western Regulatory Area of the Gulf of Alaska (GOA). This action is necessary to prevent exceeding the 2012 total allowable catch (TAC) of Pacific ocean perch in the Western Regulatory Area of the GOA.

DATES: Effective 1200 hrs, Alaska local time (A.l.t.), July 2, 2012, through 2400 hrs, A.l.t., December 31, 2012.

FOR FURTHER INFORMATION CONTACT: Steve Whitney, 907–586–7269.

SUPPLEMENTARY INFORMATION: NMFS manages the groundfish fishery in the GOA exclusive economic zone according to the Fishery Management Plan for Groundfish of the Gulf of Alaska (FMP) prepared by the North Pacific Fishery Management Council under authority of the Magnuson-Stevens Fishery Conservation and Management Act. Regulations governing fishing by U.S. vessels in accordance with the FMP appear at subpart H of 50 CFR part 600 and 50 CFR part 679.

The 2012 TAC of Pacific ocean perch in the Western Regulatory Area of the GOA is 2,102 metric tons (mt) as established by the final 2012 and 2013 harvest specifications for groundfish of the GOA (77 FR 15194, March 14, 2012).

In accordance with § 679.20(d)(1)(i), the Administrator, Alaska Region, NMFS (Regional Administrator), has determined that the 2012 TAC of Pacific ocean perch in the Western Regulatory Area of the GOA will soon be reached. Therefore, the Regional Administrator is establishing a directed fishing allowance of 1,802 mt, and is setting aside the remaining 300 mt as bycatch to support other anticipated groundfish fisheries. In accordance with § 679.20(d)(1)(iii), the Regional Administrator finds that this directed fishing allowance has been reached. Consequently, NMFS is prohibiting directed fishing for Pacific ocean perch in the Western Regulatory Area of the GOA.

After the effective date of this closure the maximum retainable amounts at § 679.20(e) and (f) will apply at all times during a trip.

Classification

This action responds to the best available information recently obtained from the fishery. The acting Assistant Administrator for Fisheries, NOAA (AA), finds good cause to waive the requirement to provide prior notice and opportunity for public comment pursuant to the authority set forth at 5 U.S.C. 553(b)(B) as such requirement is impracticable and contrary to the public interest. This requirement is impracticable and contrary to the public interest because it would prevent NMFS from responding to the most recent fisheries data in a timely fashion and would delay the closure of Pacific ocean

perch in the Western Regulatory Area of the GOA. NMFS was unable to publish a notice providing time for public comment because the most recent, relevant data only became available as of June 28, 2012.

The AA also finds good cause to waive the 30-day delay in the effective date of this action under 5 U.S.C. 553(d)(3). This finding is based upon the reasons provided above for waiver of prior notice and opportunity for public comment.

This action is required by § 679.20 and is exempt from review under Executive Order 12866.

Authority: 16 U.S.C. 1801 *et seq.*

Dated: June 29, 2012.

James P. Burgess,

Acting Director, Office of Sustainable Fisheries, National Marine Fisheries Service.

[FR Doc. 2012–16478 Filed 6–29–12; 4:15 pm]

BILLING CODE 3510–22–P

Proposed Rules

Federal Register
Vol. 77, No. 129
Thursday, July 5, 2012

This section of the FEDERAL REGISTER contains notices to the public of the proposed issuance of rules and regulations. The purpose of these notices is to give interested persons an opportunity to participate in the rule making prior to the adoption of the final rules.

DEPARTMENT OF TRANSPORTATION

Federal Aviation Administration

14 CFR Part 71

[Docket No. FAA–2012–0539; Airspace Docket No. 12–ANM–10]

Proposed Establishment of Class E Airspace; Circle Town, MT

AGENCY: Federal Aviation Administration (FAA), DOT.

ACTION: Notice of proposed rulemaking (NPRM).

SUMMARY: This action proposes to establish Class E airspace at Circle Town County Airport, Circle Town, MT, to accommodate aircraft using new Area Navigation (RNAV) Global Positioning System (GPS) standard instrument approach procedures at the airport. The FAA is proposing this action to enhance the safety and management of Instrument Flight Rules (IFR) operations at Circle Town County Airport.

DATES: Comments must be received on or before August 20, 2012.

ADDRESSES: Send comments on this proposal to the U.S. Department of Transportation, Docket Operations, M–30, West Building Ground Floor, Room W12–140, 1200 New Jersey Avenue SE., Washington, DC 20590; telephone (202) 366–9826. You must identify FAA Docket No. FAA–2012–0539; Airspace Docket No. 12–ANM–10, at the beginning of your comments. You may also submit comments through the Internet at *http://www.regulations.gov.*

FOR FURTHER INFORMATION CONTACT: Eldon Taylor, Federal Aviation Administration, Operations Support Group, Western Service Center, 1601 Lind Avenue SW., Renton, WA 98057; telephone (425) 203–4537.

SUPPLEMENTARY INFORMATION:

Comments Invited

Interested parties are invited to participate in this proposed rulemaking by submitting such written data, views, or arguments, as they may desire. Comments that provide the factual basis supporting the views and suggestions presented are particularly helpful in developing reasoned regulatory decisions on the proposal. Comments are specifically invited on the overall regulatory, aeronautical, economic, environmental, and energy-related aspects of the proposal.

Communications should identify both docket numbers (FAA Docket No. FAA 2012–0539 and Airspace Docket No. 12–ANM–10) and be submitted in triplicate to the Docket Management System (see **ADDRESSES** section for address and phone number). You may also submit comments through the Internet at *http://www.regulations.gov.*

Commenters wishing the FAA to acknowledge receipt of their comments on this action must submit with those comments a self-addressed stamped postcard on which the following statement is made: ''Comments to FAA Docket No. FAA–2012–0539 and Airspace Docket No. 12–ANM–10''. The postcard will be date/time stamped and returned to the commenter.

All communications received on or before the specified closing date for comments will be considered before taking action on the proposed rule. The proposal contained in this action may be changed in light of comments received. All comments submitted will be available for examination in the public docket both before and after the closing date for comments. A report summarizing each substantive public contact with FAA personnel concerned with this rulemaking will be filed in the docket.

Availability of NPRMs

An electronic copy of this document may be downloaded through the Internet at *http://www.regulations.gov.* Recently published rulemaking documents can also be accessed through the FAA's Web page at *http://www.faa.gov/airports_airtraffic/air_traffic/publications/airspace_amendments/.*

You may review the public docket containing the proposal, any comments received, and any final disposition in person in the Dockets Office (see the **ADDRESSES** section for the address and phone number) between 9 a.m. and 5 p.m., Monday through Friday, except federal holidays. An informal docket may also be examined during normal business hours at the Northwest Mountain Regional Office of the Federal Aviation Administration, Air Traffic Organization, Western Service Center, Operations Support Group, 1601 Lind Avenue SW., Renton, WA 98057.

Persons interested in being placed on a mailing list for future NPRM's should contact the FAA's Office of Rulemaking, (202) 267–9677, for a copy of Advisory Circular No. 11–2A, Notice of Proposed Rulemaking Distribution System, which describes the application procedure.

The Proposal

The FAA is proposing an amendment to Title 14 Code of Federal Regulations (14 CFR) part 71 by establishing Class E airspace at Circle Town County Airport, Circle Town, MT. Controlled airspace is necessary to accommodate aircraft using new RNAV (GPS) standard instrument approach procedures at Circle Town County Airport. This action would enhance the safety and management of IFR operations at the airport.

Class E airspace designations are published in paragraph 6005, of FAA Order 7400.9V, dated August 9, 2011, and effective September 15, 2011, which is incorporated by reference in 14 CFR 71.1. The Class E airspace designation listed in this document will be published subsequently in this Order.

The FAA has determined this proposed regulation only involves an established body of technical regulations for which frequent and routine amendments are necessary to keep them operationally current. Therefore, this proposed regulation; (1) Is not a ''significant regulatory action'' under Executive Order 12866; (2) is not a ''significant rule'' under DOT Regulatory Policies and Procedures (44 FR 11034; February 26, 1979); and (3) does not warrant preparation of a regulatory evaluation as the anticipated impact is so minimal. Since this is a routine matter that will only affect air traffic procedures and air navigation, it is certified this proposed rule, when promulgated, would not have a significant economic impact on a substantial number of small entities under the criteria of the Regulatory Flexibility Act.

The FAA's authority to issue rules regarding aviation safety is found in Title 49 of the U.S. Code. Subtitle 1, Section 106, describes the authority for the FAA Administrator. Subtitle VII, Aviation Programs, describes in more detail the scope of the agency's

authority. This rulemaking is promulgated under the authority described in Subtitle VII, Part A, Subpart I, Section 40103. Under that section, the FAA is charged with prescribing regulations to assign the use of the airspace necessary to ensure the safety of aircraft and the efficient use of airspace. This regulation is within the scope of that authority as it would establish controlled airspace at Circle Town County Airport, Circle Town, MT.

This proposal will be subject to an environmental analysis in accordance with FAA Order 1050.1E, ''Environmental Impacts: Policies and Procedures'' prior to any FAA final regulatory action.

List of Subjects in 14 CFR Part 71

Airspace, Incorporation by reference, Navigation (air).

The Proposed Amendment

Accordingly, pursuant to the authority delegated to me, the Federal Aviation Administration proposes to amend 14 CFR part 71 as follows:

PART 71—DESIGNATION OF CLASS A, B, C, D AND E AIRSPACE AREAS; AIR TRAFFIC SERVICE ROUTES; AND REPORTING POINTS

1. The authority citation for 14 CFR part 71 continues to read as follows:

Authority: 49 U.S.C. 106(g), 40103, 40113, 40120; E.O. 10854, 24 FR 9565, 3 CFR, 1959–1963 Comp., p. 389.

§ 71.1 [Amended]

2. The incorporation by reference in 14 CFR 71.1 of the Federal Aviation Administration Order 7400.9V, Airspace Designations and Reporting Points, dated August 9, 2011, and effective September 15, 2011 is amended as follows:

Paragraph 6005 Class E airspace areas extending upward from 700 feet or more above the surface of the earth.

* * * * *

ANM MT E5 Circle Town, MT [New]

Circle Town County Airport
(Lat. 47°25′06″ N., long. 105°33′39″ W.)

That airspace extending upward from 700 feet above the surface within 12.1-mile radius of the Circle Town County Airport; that airspace extending upward from 1,200 feet above the surface bounded by a line beginning at lat. 47°59′00″ N., long. 106°16′00″ W.; to lat. 47°49′00″ N., long. 105°59′00″ W.; to lat. 47°49′00″ N., long. 105°24′00″ W.; to lat. 47°40′00″ N., long. 105°26′00″ W.; to lat. 47°25′00″ N., long. 105°00′00″ W.; to lat. 47°05′00″ N., long. 105°25′00″ W., to lat. 47°22′00″ N., long. 106°06′00″ W.; to lat. 47°27′00″ N., long. 106°17′00″ W.; to lat. 47°50′00″ N., long. 106°26′00″ W.; thence to the point of origin.

Issued in Seattle, Washington, on June 25, 2012.

John Warner,

Manager, Operations Support Group, Western Service Center.

[FR Doc. 2012–16425 Filed 7–3–12; 8:45 am]

BILLING CODE 4910–13–P

DEPARTMENT OF TRANSPORTATION

Federal Aviation Administration

14 CFR Part 71

[Docket No. FAA–2012–0586; Airspace Docket No. 12–ASO–29]

Proposed Establishment of Class E Airspace; La Belle, FL

AGENCY: Federal Aviation Administration (FAA), DOT.

ACTION: Notice of proposed rulemaking (NPRM).

SUMMARY: This action proposes to establish Class E Airspace at La Belle, FL, to accommodate the Area Navigation (RNAV) Global Positioning System (GPS) Standard Instrument Approach Procedures at La Belle Municipal Airport. This action would enhance the safety and airspace management of Instrument Flight Rules (IFR) operations at the airport.

DATES: Comments must be received on or before August 20, 2012. The Director of the Federal Register approves this incorporation by reference action under title 1, Code of Federal Regulations, part 51, subject to the annual revision of FAA, Order 7400.9 and publication of conforming amendments.

ADDRESSES: Send comments on this rule to: U.S. Department of Transportation, Docket Operations, West Building Ground Floor, Room W12–140, 1200 New Jersey Avenue SE., Washington, DC 20590–0001; Telephone: 1–800–647–5527; Fax: 202–493–2251. You must identify the Docket Number FAA–2012–0586; Airspace Docket No. 12–ASO–29, at the beginning of your comments. You may also submit and review received comments through the Internet at *http://www.regulations.gov*.

FOR FURTHER INFORMATION CONTACT: John Fornito, Operations Support Group, Eastern Service Center, Federal Aviation Administration, P.O. Box 20636, Atlanta, Georgia 30320; telephone (404) 305–6364.

SUPPLEMENTARY INFORMATION:

Comments Invited

Interested persons are invited to comment on this rule by submitting such written data, views, or arguments, as they may desire. Comments that provide the factual basis supporting the views and suggestions presented are particularly helpful in developing reasoned regulatory decisions on the proposal. Comments are specifically invited on the overall regulatory, aeronautical, economic, environmental, and energy-related aspects of the proposal.

Communications should identify both docket numbers (FAA Docket No. FAA–2012–0586; Airspace Docket No. 12–ASO–29) and be submitted in triplicate to the Docket Management System (see **ADDRESSES** section for address and phone number). You may also submit comments through the Internet at *http://www.regulations.gov*.

Persons wishing the FAA to acknowledge receipt of their comments on this action must submit with those comments a self-addressed stamped postcard on which the following statement is made: ''Comments to Docket No. FAA–2012–0249; Airspace Docket No. 12–ASO–16.'' The postcard will be date/time stamped and returned to the commenter.

All communications received before the specified closing date for comments will be considered before taking action on the proposed rule. The proposal contained in this notice may be changed in light of the comments received. A report summarizing each substantive public contact with FAA personnel concerned with this rulemaking will be filed in the docket.

Availability of NPRMs

An electronic copy of this document may be downloaded from and comments submitted through *http://www.regulations.gov.* Recently published rulemaking documents can also be accessed through the FAA's Web page at *http://www.faa.gov/airports_airtraffic/air_traffic/publications/airspace_amendments/*.

You may review the public docket containing the proposal, any comments received and any final disposition in person in the Dockets Office (see the **ADDRESSES** section for address and phone number) between 9 a.m. and 5 p.m., Monday through Friday, except Federal Holidays. An informal docket may also be examined during normal business hours at the office of the Eastern Service Center, Federal Aviation Administration, Room 350, 1701 Columbia Avenue, College Park, Georgia 30337.

Persons interested in being placed on a mailing list for future NPRM's should contact the FAA's Office of Rulemaking, (202) 267–9677, to request a copy of Advisory circular No. 11–2A, Notice of

Proposed Rulemaking Distribution System, which describes the application procedure.

The Proposal

The FAA is considering an amendment to Title 14, Code of Federal Regulations (14 CFR) part 71 to establish Class E airspace at La Belle, FL, providing the controlled airspace required to support the RNAV GPS standard instrument approach procedures for La Belle Municipal Airport. Controlled airspace extending upward from 700 feet above the surface would be established for the safety and management of IFR operations at the airport.

Class E airspace designations are published in Paragraph 6005 of FAA Order 7400.9V, dated August 9, 2011, and effective September 15, 2011, which is incorporated by reference in 14 CFR 71.1. The Class E airspace designation listed in this document will be published subsequently in the Order.

The FAA has determined that this proposed regulation only involves an established body of technical regulations for which frequent and routine amendments are necessary to keep them operationally current. It, therefore, (1) Is not a ''significant regulatory action'' under Executive Order 12866; (2) is not a ''significant rule'' under DOT Regulatory Policies and Procedures (44 FR 11034; February 26, 1979); and (3) does not warrant preparation of a Regulatory Evaluation as the anticipated impact is so minimal. Since this is a routine matter that will only affect air traffic procedures and air navigation, it is certified that this proposed rule, when promulgated, would not have a significant economic impact on a substantial number of small entities under the criteria of the Regulatory Flexibility Act.

The FAA's authority to issue rules regarding aviation safety is found in Title 49 of the United States Code. Subtitle I, Section 106 describes the authority of the FAA Administrator. Subtitle VII, Aviation Programs, describes in more detail the scope of the agency's authority. This proposed rulemaking is promulgated under the authority described in Subtitle VII, Part A, Subpart I, Section 40103. Under that section, the FAA is charged with prescribing regulations to assign the use of airspace necessary to ensure the safety of aircraft and the efficient use of airspace. This proposed regulation is within the scope of that authority as it would establish Class E airspace at La Belle Municipal Airport, La Belle, FL.

This proposal will be subject to an environmental analysis in accordance with FAA Order 1050.1E, ''Environmental Impacts: Policies and Procedures'' prior to any FAA final regulatory action.

Lists of Subjects in 14 CFR Part 71

Airspace, Incorporation by reference, Navigation (Air).

The Proposed Amendment

In consideration of the foregoing, the Federal Aviation Administration proposes to amend 14 CFR part 71 as follows:

PART 71—DESIGNATION OF CLASS A, B, C, D, AND E AIRSPACE AREAS; AIR TRAFFIC SERVICE ROUTES; AND REPORTING POINTS

1. The authority citation for part 71 continues to read as follows:

Authority: 49 U.S.C. 106(g); 40103, 40113, 40120; E.O. 10854, 24 FR 9565, 3 CFR, 1959–1963 Comp., p. 389.

§ 71.1 [Amended]

2. The incorporation by reference in 14 CFR 71.1 of Federal Aviation Administration Order 7400.9V, Airspace Designations and Reporting Points, dated August 9, 2011, effective September 15, 2011, is amended as follows:

Paragraph 6005 Class E airspace areas extending upward from 700 feet or more above the surface of the earth.

* * * * *

ASO FL E5 La Belle, FL [New]

La Belle Municipal Airport, FL
(Lat. 26°44′26″ N., long. 81°25′42″ W.)

That airspace extending upward from 700 feet above the surface within a 6.7-mile radius of La Belle Municipal Airport.

Issued in College Park, Georgia, on June 21, 2012.

Gerald E. Lynch,

Acting Manager, Operations Support Group, Eastern Service Center, Air Traffic Organization.

[FR Doc. 2012–16427 Filed 7–3–12; 8:45 am]

BILLING CODE 4910–13–P

DEPARTMENT OF TRANSPORTATION

Federal Aviation Administration

14 CFR Part 71

[Docket No. FAA–2012–0385; Airspace Docket No. 12–ASO–23]

Proposed Establishment of Class E Airspace; Reidsville, GA, and Proposed Amendment of Class E Airspace; Vidalia, GA

AGENCY: Federal Aviation Administration (FAA), DOT.

ACTION: Notice of proposed rulemaking (NPRM).

SUMMARY: This action proposes to establish Class E Airspace at Reidsville, GA. Separation of existing Class E airspace surrounding Swinton Smith Field at Reidsville Municipal Airport, Reidsville, GA, from the Class E airspace of Vidalia Regional Airport, Vidalia, GA, has made this action necessary to enhance the safety and airspace management of Instrument Flight Rules (IFR) operations at the airport. This action also would change the names of both airports and update the airport's geographic coordinates.

DATES: Comments must be received on or before August 20, 2012. The Director of the Federal Register approves this incorporation by reference action under title 1, Code of Federal Regulations, part 51, subject to the annual revision of FAA, Order 7400.9 and publication of conforming amendments.

ADDRESSES: Send comments on this rule to: U.S. Department of Transportation, Docket Operations, West Building Ground Floor, Room W12–140, 1200 New Jersey SE., Washington, DC 20590–0001; Telephone: 1–800–647–5527; Fax: 202–493–2251. You must identify the Docket Number FAA–2012–0385; Airspace Docket No. 12–ASO–23, at the beginning of your comments. You may also submit and review received comments through the Internet at *http://www.regulations.gov*.

FOR FURTHER INFORMATION CONTACT: John Fornito, Operations Support Group, Eastern Service Center, Federal Aviation Administration, P.O. Box 20636, Atlanta, Georgia 30320; telephone (404) 305–6364.

SUPPLEMENTARY INFORMATION:

Comments Invited

Interested persons are invited to comment on this rule by submitting such written data, views, or arguments, as they may desire. Comments that provide the factual basis supporting the views and suggestions presented are particularly helpful in developing reasoned regulatory decisions on the proposal. Comments are specifically invited on the overall regulatory, aeronautical, economic, environmental, and energy-related aspects of the proposal.

Communications should identify both docket numbers (FAA Docket No. FAA–2012–0385; Airspace Docket No. 12–ASO–23) and be submitted in triplicate to the Docket Management System (see **ADDRESSES** section for address and phone number). You may also submit

comments through the Internet at *http://www.regulations.gov*.

Persons wishing the FAA to acknowledge receipt of their comments on this action must submit with those comments a self-addressed stamped postcard on which the following statement is made: ''Comments to Docket No. FAA–2012–0385; Airspace Docket No. 12–ASO–23.'' The postcard will be date/time stamped and returned to the commenter.

All communications received before the specified closing date for comments will be considered before taking action on the proposed rule. The proposal contained in this notice may be changed in light of the comments received. A report summarizing each substantive public contact with FAA personnel concerned with this rulemaking will be filed in the docket.

Availability of NPRMs

An electronic copy of this document may be downloaded from and comments submitted through *http://www.regulations.gov*. Recently published rulemaking documents can also be accessed through the FAA's Web page at *http://www.faa.gov/airports_airtraffic/air_traffic/publications/airspace_amendments/*.

You may review the public docket containing the proposal, any comments received and any final disposition in person in the Dockets Office (see the **ADDRESSES** section for address and phone number) between 9 a.m. and 5 p.m., Monday through Friday, except Federal Holidays. An informal docket may also be examined during normal business hours at the office of the Eastern Service Center, Federal Aviation Administration, room 350, 1701 Columbia Avenue, College Park, Georgia 30337.

Persons interested in being placed on a mailing list for future NPRM's should contact the FAA's Office of Rulemaking, (202) 267–9677, to request a copy of Advisory circular No. 11–2A, Notice of Proposed Rulemaking distribution System, which describes the application procedure.

The Proposal

The FAA is considering an amendment to Title 14, Code of Federal Regulations (14 CFR) part 71 by establishing Class E airspace extending upward from 700 feet above the surface at Swinton Smith Field at Reidsville Municipal Airport (formerly Reidsville Airport), Reidsville, GA, to accommodate the separation of existing Class E airspace surrounding Vidalia Regional Airport (formerly Vidalia Municipal Airport), Vidalia, GA. Geographic coordinates for both airports also would be adjusted to be in concert with the FAA's aeronautical database.

Class E airspace designations are published in Paragraph 6005 of FAA Order 7400.9V, dated August 9, 2011, and effective September 15, 2011, which is incorporated by reference in 14 CFR 71.1. The Class E airspace designation listed in this document will be published subsequently in the Order.

The FAA has determined that this proposed regulation only involves an established body of technical regulations for which frequent and routine amendments are necessary to keep them operationally current. It, therefore, (1) Is not a ''significant regulatory action'' under Executive Order 12866; (2) is not a ''significant rule'' under DOT Regulatory Policies and Procedures (44 FR 11034; February 26, 1979); and (3) does not warrant preparation of a Regulatory Evaluation as the anticipated impact is so minimal. Since this is a routine matter that will only affect air traffic procedures and air navigation, it is certified that this proposed rule, when promulgated, would not have a significant economic impact on a substantial number of small entities under the criteria of the Regulatory Flexibility Act.

The FAA's authority to issue rules regarding aviation safety is found in Title 49 of the United States Code. Subtitle I, Section 106 describes the authority of the FAA Administrator. Subtitle VII, Aviation Programs, describes in more detail the scope of the agency's authority. This proposed rulemaking is promulgated under the authority described in Subtitle VII, Part A, Subpart I, Section 40103. Under that section, the FAA is charged with prescribing regulations to assign the use of airspace necessary to ensure the safety of aircraft and the efficient use of airspace. This proposed regulation is within the scope of that authority as it would amend Class E airspace at Vidalia, GA and establish Class E airspace at Reidsville, GA.

This proposal will be subject to an environmental analysis in accordance with FAA Order 1050.1E, ''Environmental Impacts: Policies and Procedures'' prior to any FAA final regulatory action.

Lists of Subjects in 14 CFR Part 71:

Airspace, Incorporation by reference, Navigation (air).

The Proposed Amendment

In consideration of the foregoing, the Federal Aviation Administration proposes to amend 14 CFR part 71 as follows:

PART 71—DESIGNATION OF CLASS A, B, C, D, AND E AIRSPACE AREAS; AIR TRAFFIC SERVICE ROUTES; AND REPORTING POINTS

1. The authority citation for part 71 continues to read as follows:

Authority: 49 U.S.C. 106(g); 40103, 40113, 40120; E.O. 10854, 24 FR 9565, 3 CFR, 1959–1963 Comp., p. 389.

§ 71.1 [Amended]

2. The incorporation by reference in 14 CFR 71.1 of Federal Aviation Administration Order 7400.9V, Airspace Designations and Reporting Points, dated August 9, 2011, effective September 15, 2011, is amended as follows:

Paragraph 6005 Class E airspace areas extending upward from 700 feet or more above the surface of the earth.

* * * * *

ASO GA E5 Vidalia, GA [Amended]

Vidalia Regional Airport, GA
(Lat. 32°11′34″ N., long. 82°22′16″ W.)

That airspace extending upward from 700 feet above the surface within a 7-mile radius of Vidalia Regional Airport.

* * * * *

ASO GA E5 Reidsville, GA [New]

Swinton Smith Field at Reidsville Municipal Airport, GA
(Lat. 32°03′32″ N., long. 82°09′06″ W.)

That airspace extending upward from 700 feet above the surface within a 7-mile radius of the Swinton Smith Field at Reidsville Municipal Airport.

Issued in College Park, Georgia, on June 21, 2012.

Gerald E. Lynch,

Acting Manager, Operations Support Group, Eastern Service Center, Air Traffic Organization.

[FR Doc. 2012–16447 Filed 7–3–12; 8:45 am]

BILLING CODE 4910–13–P

DEPARTMENT OF TRANSPORTATION

Federal Aviation Administration

14 CFR Part 121

[Docket No. FAA–2012–0670]

Proposed Legal Interpretation

AGENCY: Federal Aviation Administration (FAA), DOT.

ACTION: Proposed interpretation; correction.

SUMMARY: On June 1, 2012 at 77 FR 32441, the FAA published a proposed legal interpretation in which the agency considered clarifying prior legal interpretations regarding pilot in command discretion under 14 CFR

121.547(a)(3) and (a)(4). The agency inadvertently assigned an incorrect docket number to the proposed legal interpretation. This document corrects the docket number. Any comments submitted to docket number FAA–2011–0045 regarding the proposed legal interpretation published at 77 FR 32441 will be moved to the correct docket, FAA–2012–0670.

FOR FURTHER INFORMATION CONTACT: Sara Mikolop, Attorney, Regulations Division, Office of the Chief Counsel, Federal Aviation Administration, 800 Independence Avenue SW., Washington, DC 20591; telephone: 202–267–3073.

Correction

In the **Federal Register** of June 1, 2012, in FR Doc. 2012–13290, on page 32441, in the third column, in the heading, correct the docket number to read:

[Docket No. FAA–2012–0670]

Also, on page 32441, in the third column, correct the **ADDRESSES** caption to read:

ADDRESSES: You may send comments identified by Docket Number FAA–2012–0670 using any of the following methods:

Federal eRulemaking Portal: Go to *http://www.regulations.gov* and follow the online instructions for sending your comments electronically.

Mail: Send comments to Docket Operations, M–30; U.S. Department of Transportation, 1200 New Jersey Avenue SE., Room W12–140, West Building Ground Floor, Washington, DC 20590–0001.

Hand Delivery or Courier: Bring comments to Docket Operations in Room W12–140 of the West Building Ground Floor at 1200 New Jersey Avenue SE., Washington, DC, between 9 a.m. and 5 p.m., Monday through Friday, except Federal holidays.

Fax: Fax comments to Docket Operations at 202–493–2251.

Issued in Washington, DC, on June 28, 2012.

Rebecca B. MacPherson,

Assistant Chief Counsel for Regulations, AGC–200.

[FR Doc. 2012–16342 Filed 7–3–12; 8:45 am]

BILLING CODE 4910–13–P

DEPARTMENT OF THE TREASURY

Internal Revenue Service

26 CFR Part 1

[REG–134042–07]

RIN 1545–BG81

Basis of Indebtedness of S Corporations to Their Shareholders; Correction

AGENCY: Internal Revenue Service (IRS), Treasury.

ACTION: Correction to a notice of proposed rulemaking and notice of public hearing.

SUMMARY: This document corrects a notice of proposed rulemaking and notice of public hearing (REG–134042–07) that was published in the **Federal Register** on Tuesday, June 12, 2012 (77 FR 34884) relating to basis of indebtedness of S corporations to their shareholders.

FOR FURTHER INFORMATION CONTACT: Concerning the proposed regulations, Caroline E. Hay at (202) 622–3070; concerning the submissions of comments, the hearing and/or to be placed on the building access list to attend the hearing, Mrs Oluwafunmilayo (Funmi) Taylor, at (202) 622–7180 (not toll-free numbers).

SUPPLEMENTARY INFORMATION:

Background

The notice of proposed rulemaking and notice of public hearing (REG–134042–07) that is the subject of this correction is under section 1366 of the Internal Revenue Code.

Need for Correction

As published, REG–134042–07, contains errors that may prove to be misleading and are in need of clarification.

Correction of Publication

Accordingly, the publication of the correction to a notice of proposed rulemaking and notice of public hearing (REG–134042–07), which was the subject of FR. Doc. 2012–14188, is corrected as follows:

1. On page 34884, column 2, in the preamble, under the caption **DATES**, line 5 of the paragraph, the language ''hearing scheduled for October 8, 2012,'' is corrected to read ''hearing scheduled for October 9, 2012''.

2. On page 34886, column 1, in the preamble, under the paragraph heading ''Comments and Requests for a Public Hearing'', second paragraph, line two, the language ''for October 8, 2012, beginning at 10 a.m.'' is corrected to read ''for October 9, 2012, beginning at 10 a.m.''.

LaNita Van Dyke,

Chief, Publications and Regulations Branch, Legal Processing Division, Associate Chief Counsel (Procedure and Administration).

[FR Doc. 2012–16378 Filed 7–3–12; 8:45 am]

BILLING CODE 4830–01–P

DEPARTMENT OF DEFENSE

Office of the Secretary

32 CFR Part 199

[Docket ID DOD–2012–HA–0049]

RIN 0720–AB57

Civilian Health and Medical Program of the Uniformed Services (CHAMPUS)/TRICARE: TRICARE Retail Pharmacy Program

AGENCY: Office of the Secretary, Department of Defense (DoD).

ACTION: Proposed rule; withdrawal.

SUMMARY: The Department of Defense published a proposed rule for the CHAMPUS/TRICARE: TRICARE Retail Pharmacy Program on Tuesday, June 26, 2012 (77 FR 38019). This rule is being published to withdrawal the proposed rule. The Department has decided to defer consideration of possible regulatory changes to the TRICARE Pharmacy Benefits Program for the present time.

DATES: The proposed rule published on Tuesday, June 26, 2012 is withdrawn as of Tuesday, June 26, 2012.

FOR FURTHER INFORMATION CONTACT: Rear Admiral Thomas McGinnis, Chief, Pharmacy Operations Directorate, TRICARE Management Activity, telephone 703–681–2890.

Dated: June 28, 2012.

Patricia L. Toppings,

OSD Federal Register Liaison Officer, Department of Defense.

[FR Doc. 2012–16419 Filed 7–3–12; 8:45 am]

BILLING CODE 5001–06–P

ARCHITECTURAL AND TRANSPORTATION BARRIERS COMPLIANCE BOARD

36 CFR Part 1195

[Docket No. ATBCB–2012–0003]

RIN 3014–AA40

Medical Diagnostic Equipment Accessibility Standards Advisory Committee

AGENCY: Architectural and Transportation Barriers Compliance Board.

ACTION: Notice of establishment; appointment of members.

SUMMARY: The Architectural and Transportation Barriers Compliance Board (Access Board) has decided to establish an advisory committee to assist on matters associated with comments received and responses to questions included in a previously published Notice of Proposed Rulemaking on Medical Diagnostic Equipment Accessibility Standards.

DATES: The first meeting of the committee will be held at a date and time in September 2012. A notice of the actual date and times will be published in the **Federal Register** prior to the meeting. Decisions with respect to future meetings will be made at the first meeting and from time to time thereafter.

ADDRESSES: The first meeting of the committee will be held at the Access Board's offices, 1331 F Street NW., Suite 800, Washington, DC 20004.

FOR FURTHER INFORMATION CONTACT: Rex Pace, Office of Technical and Information Services, Architectural and Transportation Barriers Compliance Board, 1331 F Street NW., Suite 1000, Washington, DC 20004–1111. Telephone number (202) 272–0023 (Voice); (202) 272–0052 (TTY). Electronic mail address: *pace@access-board.gov*.

SUPPLEMENTARY INFORMATION: In March 2012, the Access Board published a notice of intent to establish an advisory committee to make recommendations to the Board on matters associated with comments received and responses to questions included in a previously published Notice of Proposed Rulemaking (NPRM) on Medical Diagnostic Equipment Accessibility Standards. See 77 FR 14706 (March 13, 2012).

Section 510 of the Rehabilitation Act (29 U.S.C. 794f) requires the Access Board to issue accessibility standards for medical diagnostic equipment, in consultation with the Food and Drug Administration. In February 2012, the Access Board published an NPRM proposing the accessibility standards. See 77 FR 6916 (February 9, 2012). The proposed standards contain minimum technical criteria to ensure that medical diagnostic equipment, including examination tables, examination chairs, weight scales, mammography equipment, and other imaging equipment used by health care providers for diagnostic purposes are accessible to and usable by individuals with disabilities. The proposed standards are intended to ensure, to the maximum extent possible, independent entry to, use of, and exit from such equipment by individuals with disabilities. The proposed standards do not impose any mandatory requirements on health care providers or medical device manufacturers. However, other agencies may issue regulations or adopt policies that require health care providers subject to the agency's jurisdiction to acquire accessible medical diagnostic equipment that conforms to the standards. The NPRM and information related to the proposed standards are available on the Access Board's Web site at: *http://www.access-board.gov/medical-equipment.htm*.

For the reasons stated in the notice of intent, the Access Board has determined that establishing a Medical Diagnostic Equipment Accessibility Standards Advisory Committee (Committee) is necessary and in the public interest. The Access Board has appointed the following organizations as members to the Committee:

The ADA National Network
Boston Center for Independent Living
Brewer Company
Conference of Radiation Control Program Directors, Inc.
Duke University and Medical Center
Equal Rights Center
Evan Terry Associates, P.C.
GE Healthcare
Harris Family Center for Disability and Health Policy at Western University of Health Sciences
Hausmann Industries, Inc.
Hill-Rom Company, Inc.
Hologic, Inc.
Medical Positioning, Inc.
Medical Technology Industries, Inc.
Midmark Corporation
National Council on Independent Living
Paralyzed Veterans of America
Philips Healthcare
Scale-Tronix, Inc.
Siemens Medical Solutions USA, Inc.
Stryker Medical
Sutter Health
United Spinal Association
University of the Sciences in Philadelphia, Department of Occupational Therapy

The Department of Justice, Department of Health and Human Services (Food and Drug Administration), and the Department of Veterans Affairs will serve as ex officio members.

The Access Board regrets its inability to accommodate all requests for membership on the Committee. It was necessary to limit membership to maintain balance among members representing different interests such as medical device manufacturers, health care providers, and disability organizations. The Committee membership identified above provides representation for interests affected by the issues to be discussed.

The comment period on the NPRM ended on June 8, 2012. Fifty-three comments were received by the end of the comment period. Access Board staff is conducting a preliminary analysis of the public comments to assist the Committee in its deliberations.

The Committee's first meeting will be held at a date and time in September 2012. A notice of the actual date and times will be published in the **Federal Register** prior to the meeting. Decisions with respect to future meetings will be made at the first meeting and from time to time thereafter. Meetings will be held at the Access Board's offices, 1331 F Street NW., suite 800, Washington, DC 20004. The Committee is expected to hold no more than four meetings and present a report with its recommendations to the Access Board within two months of the Committee's first meeting.

Committee meetings will be open to the public, and interested persons can attend the meetings and communicate their views. Members of the public will have opportunities to address the Committee on issues of interest to them and the Committee. Members of groups or individuals who are not members of the Committee may also have the opportunity to participate if subcommittees of the Committee are formed.

Susan Brita,

Chair.

[FR Doc. 2012–16319 Filed 7–3–12; 8:45 am]

BILLING CODE 8150–01–P

ENVIRONMENTAL PROTECTION AGENCY

40 CFR Part 52

[EPA–R10–OAR–2012–0380; FRL–9693–9]

Approval and Promulgation of Air Quality Implementation Plans; Washington; Determination of Clean Data for the 2006 24-Hour Fine Particulate Standard for the Tacoma, Pierce County Nonattainment Area

AGENCY: Environmental Protection Agency (EPA).

ACTION: Proposed rule.

SUMMARY: EPA is proposing to determine that the Tacoma, Pierce County nonattainment area (hereafter referred to as ''Tacoma, Pierce County'' or ''the area'') for the 2006 24-hour fine particulate matter ($PM_{2.5}$) National Ambient Air Quality Standard (NAAQS) has clean data for the 2006 24-hour $PM_{2.5}$ NAAQS. This proposed determination is based upon quality-assured, quality-controlled, and certified ambient air monitoring data showing that the area has monitored attainment of the 2006 $PM_{2.5}$ NAAQS based on the 2009–2011 data available in EPA's Air Quality System (AQS) database. If this proposed determination is made final, the requirements for the area to submit an attainment demonstration, associated reasonably available control measures (RACM), a reasonable further progress plan (RFP), contingency measures, and other planning State Implementation Plans (SIPs) related to attainment of the standard shall be suspended for so long as the area continues to meet the 2006 24-hour $PM_{2.5}$ NAAQS. This action is being taken under the Clean Air Act (CAA).

DATES: Written comments must be received on or before August 6, 2012.

ADDRESSES: Submit your comments, identified by Docket ID No. EPA–R10–OAR–2012–0380, by any of the following methods:

- *www.regulations.gov:* Follow the on-line instructions for submitting comments.
- *Email: R10-Public_Comments@epa.gov.*
- *Mail:* Jeff Hunt, EPA Region 10, Office of Air, Waste and Toxics (AWT–107), 1200 Sixth Avenue, Suite 900, Seattle, WA 98101.
- *Hand Delivery/Courier:* EPA Region 10, 1200 Sixth Avenue, Suite 900, Seattle, WA 98101. Attention: Jeff Hunt, Office of Air, Waste and Toxics, AWT–107. Such deliveries are only accepted during normal hours of operation, and special arrangements should be made for deliveries of boxed information.

Instructions: Direct your comments to Docket ID No. EPA–R10–OAR–2012–0112. EPA's policy is that all comments received will be included in the public docket without change and may be made available online at *www.regulations.gov,* including any personal information provided, unless the comment includes information claimed to be Confidential Business Information (CBI) or other information whose disclosure is restricted by statute. Do not submit information that you consider to be CBI or otherwise protected through *www.regulations.gov* or email. The *www.regulations.gov* Web site is an ''anonymous access'' system, which means EPA will not know your identity or contact information unless you provide it in the body of your comment. If you send an email comment directly to EPA without going through *www.regulations.gov* your email address will be automatically captured and included as part of the comment that is placed in the public docket and made available on the Internet. If you submit an electronic comment, EPA recommends that you include your name and other contact information in the body of your comment and with any disk or CD–ROM you submit. If EPA cannot read your comment due to technical difficulties and cannot contact you for clarification, EPA may not be able to consider your comment. Electronic files should avoid the use of special characters, any form of encryption, and be free of any defects or viruses.

Docket: All documents in the docket are listed in the *www.regulations.gov* index. Although listed in the index, some information is not publicly available, e.g., CBI or other information whose disclosure is restricted by statute. Certain other material, such as copyrighted material, is not placed on the Internet and will be publicly available only in hard copy. Publicly available docket materials are available either electronically in *www.regulations.gov* or in hard copy during normal business hours at the Office of Air, Waste and Toxics, EPA Region 10, 1200 Sixth Avenue, Seattle, WA 98101.

FOR FURTHER INFORMATION CONTACT: Jeff Hunt at telephone number: (206) 553–0256, email address: *hunt.jeff@epa.gov,* or the above EPA, Region 10 address.

SUPPLEMENTARY INFORMATION: Throughout this document whenever ''we,'' ''us,'' or ''our'' is used, we mean EPA.

The following outline is provided to aid in locating information in this preamble.

I. What action is EPA taking?
II. What is the effect of this action?
III. What is the background for this action?
IV. What is EPA's analysis of the relevant air quality data?
V. What is EPA's proposed action?
VI. Statutory and Executive Order Reviews

I. What action is EPA taking?

EPA is proposing to determine that the area has clean data for the 2006 24-hour $PM_{2.5}$ NAAQS. This determination is based upon quality-assured, quality-controlled, and certified ambient air monitoring data showing that the area has monitored attainment of the 2006 $PM_{2.5}$ NAAQS based on 2009–2011 monitoring data.

II. What is the effect of this action?

If this determination is made final, under the provisions of EPA's $PM_{2.5}$ implementation rule (40 CFR 51.1004(c)), the requirements for the area to submit an attainment demonstration, associated RACM, RFP plan, contingency measures, and any other planning SIP requirements related to attainment of the 2006 24-hour $PM_{2.5}$ NAAQS would be suspended for so long as the area continues to meet this NAAQS. Furthermore, as described below, a final clean data determination would not be equivalent to a redesignation of the area to attainment for the 2006 24-hour $PM_{2.5}$ NAAQS.

If EPA subsequently determines that the area is in violation of the 2006 24-hour $PM_{2.5}$ NAAQS, the basis for the suspension of the specific requirements, set forth at 40 CFR 51.1004(c), would no longer exist and the area would thereafter have to address the pertinent requirements.

The proposed clean data determination that the air quality data shows attainment of the 2006 24-hour $PM_{2.5}$ NAAQS is not equivalent to the redesignation of the area to attainment. This proposed action, if finalized, will not constitute a redesignation to attainment under section 107(d)(3) of the CAA, because we would not yet have an approved maintenance plan for the area as required under section 175A of the CAA, nor a determination that the area has met the other requirements for redesignation. The designation status of the area would remain nonattainment for the 2006 $PM_{2.5}$ NAAQS until such time as EPA determines that the area meets the CAA requirements for redesignation to attainment.

III. What is the background for this action?

The 2006 $PM_{2.5}$ NAAQS set forth at 40 CFR 50.13 became effective on December 18, 2006 (71 FR 61144) and promulgated a 24-hour standard of 35 micrograms per cubic meter (μg/m³) based on a 3-year average of the 98th percentile of 24-hour concentration. On December 14, 2009 (74 FR 58688), EPA made designation determinations, as required by CAA section 107(d)(1), for the 2006 24-hour $PM_{2.5}$ NAAQS. As part of that action, Tacoma, Pierce County (partial county designation) became designated as nonattainment for the 2006 24-hour $PM_{2.5}$ NAAQS.

IV. What is EPA's analysis of the relevant air quality data?

EPA has reviewed the ambient air monitoring data for $PM_{2.5}$, consistent with the requirements contained in 40 CFR part 50, as recorded in the EPA Air Quality System (AQS) database for the Tacoma, Pierce County, 2006 24-hour $PM_{2.5}$ nonattainment area. All data considered have been recorded in the AQS data base, certified as meeting quality assurance requirements, and determined to have met data completeness requirements. On the basis of that review, EPA has concluded that this area attained the 2006 24-hour $PM_{2.5}$ NAAQS during the 2009–2011 monitoring period. Under EPA regulations at 40 CFR 50.7: ''The 24-hour primary and secondary $PM_{2.5}$ standards are met when the 98th percentile 24-hour concentration, as determined in accordance with appendix N of this part, is less than or equal to 35 μg/m³.'' The following table shows the design values (the metrics calculated in accordance with 40 CFR part 50, appendix N, for determining compliance with the NAAQS) for the 2006 24-hour $PM_{2.5}$ NAAQS for the years 2009–2011. Because the 2009–2011 design value at the Federal Reference Method monitor, Tacoma South L Street, is equal to the 2006 24-hour $PM_{2.5}$ NAAQS of 35 μg/m³, EPA is proposing to determine that the area has monitored attainment for this NAAQS.

2009–2011 DAILY AVERAGE CONCENTRATIONS IN THE TACOMA, PIERCE COUNTY NONATTAINMENT AREA

Monitor name	Monitor ID	2009–11 Design values (μg/m³)
Tacoma South L Street [1]	530530029	35
Tacoma Tide flats—2301 Alexander Ave [2]	530530031	24
Puyallup 5722 66th Ave E [2]	530530022	21
Puyallup South Hill [2]	530531018	22

[1] The Tacoma South L Street site is the Federal Reference Method (FRM) monitor used for determining compliance with the 2006 $PM_{2.5}$ NAAQS. $PM_{2.5}$ AQS data and information is available as part of EPA's AirTrends Site at: *http://www.epa.gov/airtrends/values.html.* More recent 2011 data is included as part of the docket for this action.

[2] The three additional monitors located in the nonattainment area listed above are neither Federal Reference Method nor Federal Equivalent Method (FEM) monitors but are included to provide supplementary information. Detailed information on how EPA calculated the design values for these monitors is included in the docket for this action.

V. What is EPA's proposed action?

EPA is proposing to determine that the Tacoma, Pierce County area has clean data for the 2006 24-hour $PM_{2.5}$ NAAQS. As provided in 40 CFR 51.1004(c), if EPA finalizes this determination, it will suspend the requirements for the area to submit an attainment demonstration, associated RACM, RFP, contingency measures, and any other planning SIP requirements related to the attainment of the 2006 $PM_{2.5}$ NAAQS, so long as the area continues to meet the standard. EPA is soliciting public comments on the issues discussed in this document. These comments will be considered before taking final action.

VI. Statutory and Executive Order Reviews

This action proposes to make an attainment determination based on air quality data and would not, if finalized, impose any additional requirements. For that reason, this proposed action:

- Is not a ''significant regulatory action'' subject to review by the Office of Management and Budget under Executive Order 12866 (58 FR 51735, October 4, 1993);
- Does not impose an information collection burden under the provisions of the Paperwork Reduction Act (44 U.S.C. 3501 *et seq.*);
- Is certified as not having a significant economic impact on a substantial number of small entities under the Regulatory Flexibility Act (5 U.S.C. 601 *et seq.*);
- Does not contain any unfunded mandate or significantly or uniquely affect small governments, as described in the Unfunded Mandates Reform Act of 1995 (Pub. L. 104–4);
- Does not have Federalism implications as specified in Executive Order 13132 (64 FR 43255, August 10, 1999);
- Is not an economically significant regulatory action based on health or safety risks subject to Executive Order 13045 (62 FR 19885, April 23, 1997);
- Is not a significant regulatory action subject to Executive Order 13211 (66 FR 28355, May 22, 2001);
- Is not subject to requirements of Section 12(d) of the National Technology Transfer and Advancement Act of 1995 (15 U.S.C. 272 note) because application of those requirements would be inconsistent with the CAA; and
- Does not provide EPA with the discretionary authority to address, as appropriate, disproportionate human health or environmental effects, using practicable and legally permissible methods, under Executive Order 12898 (59 FR 7629, February 16, 1994).

In addition, this proposed rulemaking that the Tacoma, Pierce County $PM_{2.5}$ nonattainment area has clean data for the 2006 24-hour $PM_{2.5}$ standard does not impose substantial direct costs on tribal governments or preempt tribal law as specified by Executive Order 13175 (65 FR 67249, November 9, 2000).

List of Subjects in 40 CFR Part 52

Environmental protection, Air pollution control, Particulate matter, Reporting and recordkeeping requirements.

Authority: 42 U.S.C. 7401 *et seq.*

Dated: June 19, 2012.

Julie M. Hagensen,

Acting Regional Administrator, Region 10.

[FR Doc. 2012–16312 Filed 7–3–12; 8:45 am]

BILLING CODE 6560–50–P

ENVIRONMENTAL PROTECTION AGENCY

40 CFR Part 52

[EPA–R05–OAR–2012–0467; FRL–9697–1]

Proposed Approval of Air Quality Implementation Plan; Michigan; Determination of Attainment of the 1997 Annual and 2006 24-Hour Fine Particle Standards for the Detroit-Ann Arbor Nonattainment Area

AGENCY: Environmental Protection Agency (EPA).

ACTION: Proposed rule.

SUMMARY: EPA is proposing to make three determinations under the Clean Air Act (CAA) regarding the fine particle ($PM_{2.5}$) nonattainment area of Detroit-Ann Arbor, Michigan (Livingston, Macomb, Monroe, Oakland, St. Clair, Washtenaw, and Wayne Counties) (Detroit-Ann Arbor area). EPA is proposing to determine that the Detroit-Ann Arbor area has attained both the 1997 annual $PM_{2.5}$ National Ambient Air Quality Standard (NAAQS) and the 2006 24-hour $PM_{2.5}$ NAAQS. These proposed determinations of attainment are based upon complete, quality-assured, and certified ambient air monitoring data for 2009–2011 showing that the area has monitored attainment of the 1997 annual and 2006 24-hour $PM_{2.5}$ NAAQS. Preliminary data available for 2012 indicate that the area continues in attainment of the 1997 annual and the 2006 24-hour $PM_{2.5}$ NAAQS. If these proposed determinations are made final, the requirements for the Detroit-Ann Arbor area to submit an attainment demonstration, associated reasonably available control measures (RACM) to include reasonably available control technology (RACT), a reasonable further progress (RFP) plan, contingency measures, and other planning State Implementation Plan (SIP) revisions related to attainment of the 1997 annual and the 2006 24-hour $PM_{2.5}$ NAAQS shall be suspended for so long as the area continues to attain the respective $PM_{2.5}$ NAAQS. EPA is also proposing to determine, based on complete, quality-assured and certified monitoring data for the 2007–2010 monitoring period, that the Detroit-Ann Arbor area had attained the 1997 annual $PM_{2.5}$ NAAQS by the applicable attainment date of April 5, 2010.

DATES: Comments must be received on or before August 6, 2012.

ADDRESSES: Submit your comments, identified by Docket ID No. EPA–R05–OAR–2012–0467, by one of the following methods:

1. *www.regulations.gov:* Follow the online instructions for submitting comments.
2. *Email: blakley.pamela@epa.gov.*
3. *Fax:* (312) 692–2450.
4. *Mail:* Pamela Blakley, Chief, Control Strategies Section, Air Programs Branch (AR–18J), U.S. Environmental Protection Agency, 77 West Jackson Boulevard, Chicago, Illinois 60604.
5. *Hand Delivery:* Pamela Blakley, Chief, Control Strategies Section, Air Programs Branch (AR–18J), U.S. Environmental Protection Agency, 77 West Jackson Boulevard, Chicago, Illinois 60604. Such deliveries are only accepted during the Regional Office normal hours of operation, and special arrangements should be made for deliveries of boxed information. The Regional Office official hours of business are Monday through Friday, 8:30 a.m. to 4:30 p.m., excluding Federal holidays.

Instructions: Direct your comments to Docket ID No. EPA–R05–OAR–2012–0467. EPA's policy is that all comments received will be included in the public docket without change and may be made available online at *www.regulations.gov,* including any personal information provided, unless the comment includes information claimed to be Confidential Business Information (CBI) or other information whose disclosure is restricted by statute. Do not submit information that you consider to be CBI or otherwise protected through *www.regulations.gov* or email. The *www.regulations.gov* Web site is an ''anonymous access'' system, which means EPA will not know your identity or contact information unless you provide it in the body of your comment. If you send an email comment directly to EPA without going through *www.regulations.gov* your email address will be automatically captured and included as part of the comment that is placed in the public docket and made available on the Internet. If you submit an electronic comment, EPA recommends that you include your name and other contact information in the body of your comment and with any disk or CD–ROM you submit. If EPA cannot read your comment due to technical difficulties and cannot contact you for clarification, EPA may not be able to consider your comment. Electronic files should avoid the use of special characters, any form of encryption, and be free of any defects or viruses.

Docket: All documents in the docket are listed in the *www.regulations.gov* index. Although listed in the index, some information is not publicly available, e.g., CBI or other information whose disclosure is restricted by statute. Certain other material, such as copyrighted material, will be publicly available only in hard copy. Publicly available docket materials are available either electronically in *www.regulations.gov* or in hard copy at the Environmental Protection Agency, Region 5, Air and Radiation Division, 77 West Jackson Boulevard, Chicago, Illinois 60604. This facility is open from 8:30 a.m. to 4:30 p.m., Monday through Friday, excluding Federal holidays. We recommend that you telephone Carolyn Persoon, Environmental Engineer, at (312) 353–8290, before visiting the Region 5 office.

FOR FURTHER INFORMATION CONTACT: Carolyn Persoon, Environmental Engineer, Control Strategies Section, Air Programs Branch (AR–18J), Environmental Protection Agency, Region 5, 77 West Jackson Boulevard, Chicago, Illinois 60604, (312) 353–8290, *persoon.carolyn@epa.gov.*

SUPPLEMENTARY INFORMATION: Throughout this document whenever ''we,'' ''us,'' or ''our'' is used, we mean EPA.

This supplementary information section is arranged as follows:

I. What is EPA proposing?
II. What is the background of these actions?
III. What is EPA's analysis of the relevant air quality data?
IV. What are the effects of these actions?
V. Statutory and Executive Order Reviews

I. What is EPA proposing?

In accordance with 40 CFR 51.1004(c), EPA is proposing to determine that Detroit-Ann Arbor Michigan has attained both the 1997 annual and the 2006 24-hour $PM_{2.5}$ NAAQS. These proposed determinations are based upon complete, quality-assured, and certified ambient air monitoring data for the 2009–2011 monitoring period that show the area has monitored attainment of both $PM_{2.5}$ NAAQS. Preliminary quality-assured data available for 2012 are consistent with continued attainment. In accordance with 40 CFR 51.1004(c), if EPA finalizes these determinations, it will suspend the Detroit-Ann Arbor area's obligation to submit attainment related requirements for the 1997 annual and 2006 24-hour $PM_{2.5}$ NAAQS.

Pursuant to section 179(c) of the CAA, EPA is also proposing to determine that, based on air quality monitoring data for 2007–2010, the Detroit-Ann Arbor area attained the 1997 annual $PM_{2.5}$ NAAQS by its applicable attainment date of April 5, 2010.

II. What is the background for these actions?

On July 18, 1997 (62 FR 36852), EPA established an annual $PM_{2.5}$ NAAQS at 15.0 micrograms per cubic meter (μg/m³) based on a three-year average of annual mean $PM_{2.5}$ concentrations. At that time, EPA also established a 24-hour $PM_{2.5}$ standard of 65 μg/m³. On January 5, 2005 (70 FR 944), EPA published its air quality designations and classifications for the 1997 $PM_{2.5}$ NAAQS based upon air quality monitoring data for calendar years 2001–2003. These designations became effective on April 5, 2005. The Detroit-Ann Arbor area was designated nonattainment for the 1997 $PM_{2.5}$ NAAQS.

On October 17, 2006 (71 FR 61144), EPA retained the 1997 annual $PM_{2.5}$ NAAQS at 15.0 μg/m³ based on a three-year average of annual mean $PM_{2.5}$ concentrations, and promulgated a 24-hour $PM_{2.5}$ standard of 35 μg/m³ based on a three-year average of the 98th percentile of 24-hour concentrations. On November 13, 2009 (74 FR 58688), EPA published its air quality designations and classifications for the 2006 24-hour $PM_{2.5}$ NAAQS based upon air quality monitoring data for calendar years 2006–2008. These designations became effective on December 14, 2009. The Detroit-Ann Arbor area was designated nonattainment for the 2006 24-hour $PM_{2.5}$ NAAQS.

In response to legal challenges to the annual standards promulgated in 2006, the U.S. Court of Appeals for the District of Columbia Circuit (DC Circuit) remanded these standards to EPA for further consideration. See *American Farm Bureau Federation and National Pork Producers Council, et al.* v. *EPA,* 559 F.3d 512 (DC Cir. 2009). However, given that the 1997 and 2006 annual standards are essentially identical, attainment of the 1997 annual standards would also indicate attainment of the remanded 2006 annual standards.

On April 25, 2007 (72 FR 20664), EPA promulgated its $PM_{2.5}$ implementation rule, codified at 40 CFR part 51, subpart Z, in which the Agency provided guidance for state and tribal plans to implement the 1997 p.m.$_{2.5}$ standards. This rule, at 40 CFR 51.1004(c), specifies some of the regulatory consequences of attaining the standards, as discussed later.

III. What is EPA's analysis of the relevant air quality data?

Today's proposed determinations assess whether the Detroit-Ann Arbor area has attained the 1997 annual and the 2006 24-hour $PM_{2.5}$ standards, based on the most recent three years of complete, certified and quality-assured data, and whether the Detroit-Ann Arbor area attained the 1997 annual $PM_{2.5}$ NAAQS by the applicable attainment date of April 5, 2010, based on monitored data from 2007–2010.

Under EPA's regulations at 40 CFR 50.7, the annual primary and secondary $PM_{2.5}$ standards are met when the annual arithmetic mean concentration, as determined in accordance with 40 CFR part 50, appendix N, is less than or equal to 15.0 μg/m³ at all relevant monitoring sites in the area. Under EPA regulations in 40 CFR 50.13 and in accordance with 40 CFR part 50, Appendix N, the 24-hour primary and secondary $PM_{2.5}$ standards are met when the 98th percentile 24-hour concentration is less than or equal to 35 μg/m³.

EPA has reviewed the ambient air quality monitoring data in the Detroit-Ann Arbor area, consistent with the requirements contained at 40 CFR part 50. EPA's review focused on data recorded in the EPA Air Quality System (AQS) database, for the Detroit-Ann Arbor area for $PM_{2.5}$ nonattainment area from 2007 to 2011. EPA also considered preliminary data for 2012, which has not been certified.

The Detroit-Ann Arbor area has fourteen monitors located in Macomb, Monroe, Oakland, St. Clair, Washtenaw, and Wayne Counties that reported design values from 2009–2011, the most recent three years of data, for $PM_{2.5}$ that ranged from 9.0 to 11.6 μg/m³ for the 1997 annual standard, and 24 to 32 μg/m³ for the 2006 24-hour standard, as shown in Table 1 and Table 2.

All monitors in the Detroit-Ann Arbor area recorded complete data in accordance with criteria set forth by EPA in 40 CFR part 50, appendix N, where a complete year of air quality data comprises four calendar quarters, with each quarter containing data from at least 75 percent capture of the scheduled sampling days. Available data are considered to be sufficient for comparison to the NAAQS if three consecutive complete years of data exist.

TABLE 1—THE 1997 ANNUAL $PM_{2.5}$ DESIGN VALUES FOR DETROIT-ANN ARBOR AREA MONITORS WITH COMPLETE DATA FOR THE 2007–2009, 2008–2010, AND 2009–2011 DESIGN VALUES IN μG/M³

County	Monitor	Annual standard design value 2007–2009 (μg/m³)	Annual standard design value 2008–2010 (μg/m³)	Annual standard design value 2009–2011 (μg/m³)
Macomb	New Haven 260990009	10.7	9.7	9.0
Monroe	Luna Pier 261150005	11.6	10.3	9.9
Oakland	Oak Park 261250001	11.4	10.0	9.4
St. Clair	Port Huron 261470005	11.1	9.9	9.3
Washtenaw	Ypsilanti 261610008	11.3	10.0	9.6
Wayne	Allen Park 261630001	11.9	11.0	10.5
	Dearborn 261630033	14.1	12.3	11.6
	E 7 Mile 261630019	11.6	10.6	9.9
	FIA 261630039	12.3	11.0	10.4
	Linwood 261630016	12.1	10.7	10.1
	Livonia 261630025	11.2	10.0	9.5
	Newberry 261630038	12.0	10.7	10.3
	SW HS 261630015	12.8	11.5	10.9
	Wyandotte 261630036	11.6	10.2	9.6

TABLE 2—THE 24-HOUR $PM_{2.5}$ DESIGN VALUES FOR DETROIT-ANN ARBOR AREA MONITORS WITH COMPLETE DATA FOR THE 2008–2010 AND THE 2009–2011 DESIGN VALUES IN μG/M³

County	Monitor	24-Hour standard design value 2008–2010 (μg/m³)	24-Hour standard design value 2009–2011 (μg/m³
Macomb	New Haven 260990009	27	25
Monroe	Luna Pier 261150005	26	24
Oakland	Oak Park 261250001	29	27
St. Clair	Port Huron 261470005	28	26
Washtenaw	Ypsilanti 261610008	27	25
Wayne	Allen Park 261630001	29	27
	Dearborn 261630033	32	32
	E 7 Mile 261630019	30	27
	FIA 261630039	30	28
	Linwood 261630016	30	28
	Livonia 261630025	28	26
	Newberry 261630038	29	27
	SW HS 261630015	31	28
	Wyandotte 261630036	26	24

EPA's review of monitoring data from the 2007–2009, 2008–2010, and 2009–2011 monitoring periods supports EPA's determinations that the Detroit-Ann Arbor $PM_{2.5}$ nonattainment area has: (1) Monitored attainment of the $PM_{2.5}$ NAAQS for such period and (2) attained the $PM_{2.5}$ NAAQS by the attainment date of April 5, 2010 for the 1997 standard. Additionally, the preliminary monitoring data for 2012 are consistent with the area's continued attainment.

IV. What are the effects of these actions?

If EPA's proposed determinations of attainment for the 1997 annual and 2006 24-hour $PM_{2.5}$ standard, based on the most recent three years of complete, quality-assured and certified data, are made final, under the provisions of the $PM_{2.5}$ Implementation Rule (40 CFR 51.1004(c)) the requirements for the Detroit-Ann Arbor $PM_{2.5}$ nonattainment area to submit an attainment demonstration, RACM (including RACT), an RFP plan, contingency measures, and other planning SIP revisions related to attainment of the 1997 annual and the 2006 24-hour $PM_{2.5}$ NAAQS shall be suspended for each for so long as the Detroit-Ann Arbor area continues to attain the respective $PM_{2.5}$ NAAQS.

These proposed determinations of attainment for the Detroit-Ann Arbor $PM_{2.5}$ nonattainment area would, if finalized: (1) Suspend the obligation for Michigan to submit the requirements listed above; (2) continue for each NAAQS until such time, if any, that EPA subsequently determines that any monitor in the area has violated that $PM_{2.5}$ NAAQS; and (3) be separate from any future designation determination or requirements for the Detroit-Ann Arbor $PM_{2.5}$ nonattainment area based on any future $PM_{2.5}$ NAAQS revision.

If these rulemakings are finalized and EPA subsequently determines, after notice-and-comment rulemaking in the **Federal Register**, that the Detroit-Ann Arbor area has violated the 1997 annual or 2006 24-hour $PM_{2.5}$ NAAQS, the basis for the suspension of the specific requirements for that NAAQS, set forth at 40 CFR 51.1004(c), would no longer exist, and the State of Michigan would thereafter have to address the pertinent requirements.

The actions proposed above are limited to determinations that the air quality data show that the Detroit-Ann Arbor $PM_{2.5}$ nonattainment area has monitored attainment of the 1997 annual and the 2006 24-hour $PM_{2.5}$ NAAQS, and does not result in a redesignation of the Detroit-Ann Arbor $PM_{2.5}$ nonattainment area to attainment for either the 1997 annual or the 2006 24-hour $PM_{2.5}$ NAAQS.

These proposed actions, if finalized, would not constitute a redesignation to attainment under section 107(d)(3) of the CAA because EPA is not proposing to take action pursuant to CAA section 107(d)(3) and the statutory prerequisites set forth in CAA section 107(d)(3) have not yet been met. For example, EPA has not yet approved a maintenance plan for the area as required under CAA section 175A, nor proposed a determination that the Detroit-Ann Arbor $PM_{2.5}$ nonattainment area has met the other requirements for redesignation under the CAA.

The designation status of the Detroit-Ann Arbor $PM_{2.5}$ nonattainment area will remain nonattainment for the 1997 annual and 2006 24-hour $PM_{2.5}$ NAAQS until such time as EPA takes final rulemaking action to determine that such an area meets the CAA requirements for redesignation to attainment.

Pursuant to section 179(c) of the CAA, EPA is also proposing to determine that the Detroit-Ann Arbor area attained the 1997 annual $PM_{2.5}$ NAAQS by the applicable attainment date of April 5, 2010. If this proposed determination is finalized, EPA will have met its requirement pursuant to section 179(c)(1) of the CAA to make a determination based on the Detroit-Ann Arbor area's air quality data, whether the area attained the 1997 annual $PM_{2.5}$ NAAQS by its attainment date.

EPA is soliciting comment on the issues discussed in this document. EPA will consider these comments before taking final action. Please note that if EPA receives adverse comment on any of the proposed determinations described above and if that determination may be severed from the remainder of the final agency actions, EPA may adopt as final those provisions of the proposed agency action that are not the subject of an adverse comment.

V. Statutory and Executive Order Reviews

This action proposes to make attainment determinations based on air quality data and would, if finalized, result in the suspension of certain Federal requirements and/or would not impose any additional requirements. For that reason, this proposed action:

- Is not a ''significant regulatory action'' subject to review by the Office of Management and Budget under Executive Order 12866 (58 FR 51735, October 4, 1993);
- Does not impose an information collection burden under the provisions

of the Paperwork Reduction Act (44 U.S.C. 3501 *et seq.*);

• Is certified as not having a significant economic impact on a substantial number of small entities under the Regulatory Flexibility Act (5 U.S.C. 601 *et seq.*);

• Does not contain any unfunded mandate or significantly or uniquely affect small governments, as described in the Unfunded Mandates Reform Act of 1995 (Pub. L. 104–4);

• Does not have Federalism implications as specified in Executive Order 13132 (64 FR 43255, August 10, 1999);

• Is not an economically significant regulatory action based on health or safety risks subject to Executive Order 13045 (62 FR 19885, April 23, 1997);

• Is not a significant regulatory action subject to Executive Order 13211 (66 FR 28355, May 22, 2001);

• Is not subject to requirements of Section 12(d) of the National Technology Transfer and Advancement Act of 1995 (15 U.S.C. 272 note) because application of those requirements would be inconsistent with the Clean Air Act; and

• Does not provide EPA with the discretionary authority to address, as appropriate, disproportionate human health or environmental effects, using practicable and legally permissible methods, under Executive Order 12898 (59 FR 7629, February 16, 1994).

In addition, these proposed $PM_{2.5}$ NAAQS attainment determinations do not have Tribal implications as specified by Executive Order 13175 (65 FR 67249, November 9, 2000), because the SIP is not approved to apply in Indian country located in the State, and EPA notes that it will not impose substantial direct costs on Tribal governments or preempt Tribal law.

List of Subjects in 40 CFR Part 52

Environmental protection, Air pollution control, Particulate matter, Reporting and record-keeping requirements.

Dated: June 26, 2012.

Susan Hedman,

Regional Administrator, Region 5.

[FR Doc. 2012–16438 Filed 7–3–12; 8:45 am]

BILLING CODE 6560–50–P

DEPARTMENT OF TRANSPORTATION

Pipeline and Hazardous Materials Safety Administration

49 CFR Parts 171, 173, and 178

[Docket No. PHMSA–2011–0143 (HM–253)]

RIN 2137–AE81

Hazardous Materials; Reverse Logistics (RRR)

AGENCY: Pipeline and Hazardous Materials Safety Administration (PHMSA), DOT.

ACTION: Advance notice of proposed rulemaking (ANPRM).

SUMMARY: PHMSA is publishing this ANPRM to identify ways to reduce the regulatory burden for persons who ship consumer products containing hazardous materials in the ''reverse logistics'' supply chain. Reverse logistics is the process that is initiated when a consumer product goes backwards in the distribution chain. It may be initiated by the consumer, the retailer, or anyone else in the chain. Therefore, the process may involve consumers, retailers, manufacturers, and even disposal facilities. Following this ANPRM, PHMSA anticipates publishing an NPRM that will propose to simplify the regulations for reverse logistics shipments and provide avenue means for regulatory compliance that maintains transportation safety. This action is part of DOT's retrospective plan under EO 13563 completed in August 2011 DOT's plan is available at: *http://www.dot.gov/open/docs/dot-final-rrr-plan-08-23-2011.pdf*. To fully engage the broad spectrum of stakeholders affected by reverse logistics, this ANPRM solicits comments and input on several questions in the context of reverse logistics. Any comments, data, and information received will be used to evaluate and shape the proposals in the NPRM.

DATES: Comments must be received by October 3, 2012.

ADDRESSES: You may submit comments identified by the docket number PHMSA–2011–0143 (HM–253) by any of the following methods:

• *Federal eRulemaking Portal:* Go to *http://www.regulations.gov*. Follow the online instructions for submitting comments.

• *Fax:* 1–202–493–2251.

• *Mail:* Docket Management System, U.S. Department of Transportation, Dockets Operations, M–30, Ground Floor, Room W12–140, 1200 New Jersey Avenue SE., Washington, DC 20590.

• *Hand Delivery:* U.S. Department of Transportation To Docket Operations, M–30, Ground Floor, Room W12–140 in the West Building, 1200 New Jersey Avenue SE., Washington, DC 20590, between 9 a.m. and 5 p.m., Monday through Friday, except Federal Holidays.

Instructions: All submissions must include the agency name and docket number (PHMSA–2011–0143) or RIN (RIN 2137–AE81) for this notice at the beginning of the comment. Note that all comments received will be posted without change to the docket management system, including any personal information provided. If sent by mail, comments must be submitted in duplicated. Persons wishing to receive confirmation of receipt of their comments must include a self-addressed stamped postcard.

Docket: For access to the dockets to read background documents or comments received, go to *http://www.regulations.gov* or DOT's Docket Operations Office (see **ADDRESSES**).

Privacy Act: Anyone is able to search the electronic form of any written communications and comments received into any of our dockets by the name of the individual submitting the document (or signing the document, if submitted on behalf of an association, business, labor union, etc.). You may review DOT's complete Privacy Act Statement in the **Federal Register** published on April 11, 2000 [45 FR 19477] or you may visit *http://www.regulations.gov*.

FOR FURTHER INFORMATION CONTACT: Steven Andrews, Office of Hazardous Materials Standards, Pipeline and Hazardous Materials Safety Administration, U.S. Department of Transportation, 1200 New Jersey Avenue SE., Washington, DC 20590–0001, telephone (202) 366–8553.

SUPPLEMENTARY INFORMATION:

I. Background

In general, ''reverse logistics'' pertains to the safe return of goods from the marketplace to the original vendor, manufacturer, or supplier. Reverse logistics of hazardous materials affects many industries including high-tech, retail, medical, pharmaceutical, automotive, and aerospace. In effect, reverse logistics is the supply chain in reverse. PHMSA is publishing this ANPRM to identify possible ways to reduce the regulatory burden on retail outlets that ship consumer products containing hazardous materials in the ''reverse logistics'' supply chain. PHMSA is looking to evaluate the shipment of ''reverse logistics'' by

highway, rail, and vessel. In addition, PHMSA received two petitions from industry regarding the shipping requirements for ''reverse logistics'' shipments. These petitions are outlined as follows:

P–1528

PHMSA received a petition from the Council on the Safe Transportation of Hazardous Articles Inc. (COSTHA) outlining issues related to hazardous materials and ''reverse logistics.'' In its petition for rulemaking (P–1528), COSTHA proposed that the HMR include a definition for ''reverse logistics'' in § 171.8 and add a new section, § 173.157 to outline the general requirements and exceptions for hazardous materials shipped in the context of ''reverse logistics.'' In its petition COSTHA identified an unquantifiable exposure to risk presented through undeclared hazmat from retail outlets. This includes retail operations that unknowingly return articles containing hazardous materials to the product manufacturing that are potentially compromised. The purpose of this ANPRM is to gather data on how these hazardous materials are shipped with respect to ''reverse logistics.''

COSTHA noted that hazardous materials commonly shipped from distribution centers to various retail outlets are often shipped under the ORM–D exception. PHMSA notes that the ORM–D exception allows for a hazardous material, which is a limited quantity and which meets the consumer commodity definition, to be reclassified as an ORM–D and assigned a consumer commodity shipping name. However, in a final rule issued under docket HM–215K (76 FR 3308, January 19, 2011), PHMSA began phasing out the ORM–D hazard class. Based on the final rule, the phase-out of the ORM–D system will be completed on December 31, 2014. Those materials previously shipped under the ORM–D hazard class may be able to be shipped as consumer commodities under the appropriate limited quantities exception in part 173.

COSTHA has indicated that a significant volume of these hazardous materials are returned to the retail outlet by the customer. PHMSA believes based on its enforcement experience that significant quantities of these returned hazardous materials may be in damaged packaging or even leaking prior to their shipment back to the return center. If this is the case, the materials must be repackaged and shipped as fully regulated hazardous materials under the HMR. The HMR generally defines a ''hazmat employee'' as a person employed on a full-time, part time, or temporary basis by a hazmat employer and who in the course of such full time, part time or temporary employment directly affects hazardous materials transportation safety. However, PHMSA recognizes that most retail employees or other related employees are not readily identifiable as ''hazmat employees'' as defined by § 171.8 of the HMR. Consequently this results in employees that often lack sufficient training and qualifications to classify, package, mark, label, and ship hazardous materials. This may result in unsafe shipping practices (e.g., hazardous materials shipped in containers that are not designed for the safe transportation of hazardous materials.) These occurrences are often exacerbated by hazardous materials being improperly segregated in packages. COSTHA also noted that equipment powered by internal combustion engines may be returned to retail outlets after being used and may contain residual fuel, posing a hazardous materials risk.

P–1561

PHMSA received a petition (P–1561) from the Battery Council International (Battery Council). In its petition, the Battery Council requests that PHMSA allow the shipment of used batteries from multiple shippers on a single transport vehicle under the exception provided in § 173.159(e). The Battery Council notes in their petition that currently the exception in § 173.159(e) does not clearly allow for shipment of used batteries from multiple shippers for the purposes of recycling. The petition also notes that, when this regulation was written in 1969, it was not common practice for battery to be recycled using multiple shippers. PHMSA believes that the collection of these used batteries for return, disposal, or recycling falls within the realm of ''reverse logistics.'' Currently § 173.159(e)(4) prevents a battery recycler from picking up shipments of used batteries from multiple locations. In looking at incident history, PHMSA has not identified any significant incidents involving the shipment of wet lead acid batteries. PHMSA believes that modifying this section to allow battery recyclers to pick up wet lead acid batteries from multiple locations will likely reduce the number of battery shipments on the highway and thus reduce the likelihood of an accident involving hazmat.

II. Analysis of the Problem

Under the current HMR, consumer products that are no longer suitable for retail sale are considered fully regulated. This presents a problem to retail outlets in that many may not have the necessary training or resources to handle fully regulated hazardous materials. PHMSA is looking to identify ways to potentially reduce the regulatory burden associated with the return of these hazardous materials in the ''reverse logistics'' supply chain, while at the same time ensuring their safe transportation.

According to the Reverse Logistics Association (RLA), the process of reverse logistics represents 3–15% of the Gross Domestic Product, which is estimated between $360 billion and $1.8 trillion. Retail outlets often accept returns of hazardous materials from customers that are ultimately shipped back to distribution centers. Retail sales of goods are a primary driver of goods returned. According to the 2007 Economic Census, wholesale trade in the U.S. reached $6.5 trillion (a 40% increase from the 2002 census) among 435 thousand establishments and 6.2 million employees, while retail sales reached $3.9 trillion (a 28% increase among 1.1 million establishments and 15.5 million employees).

In addition, we anticipate that online transactions will cause the quantity of reverse logistics shipments to increase. Data indicate that online purchases of hazardous materials have increased. The National Retail Federation reported that in 2010, over 48% of all retail goods (by value) were purchased from on-line providers with an average return rate of 8%. Third-party logistics providers estimate that up to 7% of an enterprise's gross sales are return costs. The third-party logistics providers themselves earn 12% to 15% in profits on this business. PHMSA is concerned that customers may often return opened or damaged packages containing hazardous materials without any regard for the HMR. This ANPRM seeks comment on whether additional language is needed to clarify how returns of hazardous materials purchased online should be handled.

The rapidly expanding market for consumer electronics is another topic of interest with respect to the ''reverse logistics'' supply chain. As emerging technologies come online, there are an ever increasing number of batteries that come along with consumer devices. As the batteries in these devices become unusable, PHSMA expects to see large quantities of batteries being returned to retail outlets. PHMSA seeks comment on this assumption. This ANPRM is seeking comment on how the retail industry should handle the recycling or disposal of these batteries for use in consumer electronics.

In all of these scenarios, PHMSA enforcement efforts have shown that hazardous materials that are returned to the distribution centers or retail outlets are shipped in ways that are inconsistent with the requirements of the HMR. Often, these materials and packages may be damaged or compromised. Very often, the employees at the retail outlets responsible for packing and shipping these materials have little or no hazardous materials training. This may result in inadequate packaging and hazard communication. Below we identify potential problems that may be attributed with the reverse logistics of hazardous materials:

1. Lack of hazardous materials training by the employees at the retail outlet;
2. Different packaging from the original packaging being used to ship the material;
3. Lack of knowledge about the hazard class by the employee;
4. Potential for hazardous materials to be subject to Environmental Protection Agency (EPA) waste manifest rules;
5. Items that were once classified as consumer commodities may no longer meet that exception;
6. Undeclared hazardous materials may be shipped within the stream of commerce;
7. Properly-marked and labeled original packaging is being improperly re-used to ship returned products that are either not hazardous materials or hazardous materials for which said packaging is not authorized; and
8. These shipments may not be accompanied by appropriate hazardous communication, such as shipping papers, emergency response numbers, placards, labels, markings, and other requirements of the HMR.

PHMSA believes that its enforcement data show that ''reverse logistics'' issues involving hazardous materials will continue to rise with the increased consumption of goods in a growing economy. PHMSA believes it could be beneficial to identify those areas where PHMSA and the regulated community can work together to facilitate the movement of hazardous materials in the ''reverse logistics'' supply chain. This could include identifying whether or not there are actually safety concerns involving ''reverse logistics'' for the transport of hazardous materials as well as identifying potential solutions moving forward.

PHMSA invites comments on the data and information contained in this section. How can we work together to better facilitate the movement of hazardous materials in the ''reverse logistics'' supply chain? What data is available regarding the current and anticipated future number of reverse logistic shipments for hazardous materials?

III. Issues To Be Considered

As previously noted, the purpose of this ANPRM is to invite comments on ''reverse logistics.'' PHSMA is considering a definition for ''reverse logistics'' and a possible new section in the HMR that will clearly identify the regulatory responsibilities of the shipper. To assist PHMSA in getting valuable data and information from commenters, we have compiled questions pertaining to the ''reverse logistics'' process and welcome input from all interested parties. Below we outline the key issues identified above:

A. Define Reverse Logistics

PHMSA is considering a regulatory definition for ''reverse logistics.'' The definition would likely be added to 49 CFR 171.8. It would clearly define the term ''reverse logistics.'' Generally, ''reverse logistics'' is thought of as the flow of surplus or unwanted material, goods, or equipment back to the firm, through its logistics chain, for reuse, recycling, or disposal. By defining ''reverse logistics'' in the HMR, PHMSA will identify how it can assist the regulated community in ensuring the safe and swift movement of these materials in the ''reverse logistics'' supply chain.

B. Create a Section Pertaining to the Shippers' Responsibilities With Respect to Reverse Logistics

PHMSA is considering adding a section outlining the shippers' responsibilities with respect to ''reverse logistics.'' PHMSA believes a section outlining the regulations for materials meeting the definition of ''reverse logistics'' should address:

1. Classification of materials under the definition of ''reverse logistics'';
2. Training requirements for employees who handle materials under ''reverse logistics;'' and
3. Packaging approved for the shipment of hazardous materials under ''reverse logistics.''

PHMSA believes that, by outlining the responsibilities of shippers with respect to reverse logistics, it will contribute to the safe and efficient movement of these materials in commerce. Do commenters agree that outlining the responsibilities of the shippers with respect to reverse logistics will promote safe and efficient movement of these materials? Would regulated entities incur documentation costs to develop and maintain risk assessments and operational procedures? If so, what is a fair estimate of the potential costs?

C. Questions and Solicitation for Public Comment

PHMSA is considering regulatory relief for ''reverse logistics.'' We have developed the following questions to solicit comments on the key issues, please provide sources for your data when available:

1. What are the types of hazardous materials and quantities that are frequently returned?
2. What is the volume of returns? Is there a ''rule-of-thumb'' metric—e.g., 10% of retail sales are returned?
   - What is the current volume returned by private citizens?
   - What is the current volume returned by other businesses?
   - What are the most widely-used methods of return (U.S. Mail, Walk-ins, Commercial Carriers, etc.)?
3. Are returns directed to a disposal facility of the original manufacturer?
4. Should returns be the responsibility of the manufacturer?
5. To what extent should retail employees who package hazardous materials for shipments back to the distribution centers be subject to the training requirements in 49 CFR part 172, subpart H? Are retail employees currently being trained for the shipment of hazardous materials under 49 CFR part 172, subpart H?
6. Are hazardous materials being properly segregated as required by § 177.843 of the HMR when being shipped from retail outlets to their distribution centers? How are they being segregated?
7. Should certain hazard classes/divisions be excluded when considering regulations for ''reverse logistics?'' If so, why?
8. Should PHMSA define specification packages for materials shipped under ''reverse logistics''? If so, why?
9. Are shipping and distribution companies assuring the safety of their employees and the public when allowing drop-box hazardous material returns? If so, how?
10. What precautions, if any, are these companies taking to avoid the mixing of hazardous materials and contamination of other packages that might contain hazardous materials and/or non-hazardous materials?
11. What role(s) do 3rd party logistics providers [1] play in the reverse logistics process, if any?

[1] The Reverse Logistics Association (RLA) defines 3rd party logistics providers as entities who

12. Have any specific safety risks been observed in returns of hazardous materials products that need to be addressed through rulemaking? If so, how should they be addressed and why?

13. How does the regulated community currently handle hazardous materials that are imported and must then be shipped back in the ''reverse logistics'' supply chain?

14. What data is available regarding the current and anticipated future number of reverse logistic shipments for hazardous materials?

15. Should PHMSA define ''reverse logistics''? If so, to what extent should PHMSA define types of shipments that would receive a relaxation under the HRM for ''reverse logistics'' shipments?

If commenters suggest modification to the existing regulatory requirements, PHMSA requests that commenters be as specific as possible. In addition, PHMSA requests commenters to provide information and supporting data related to:

1. The potential costs of modifying the existing regulatory requirements pursuant to the commenter's suggestions.

2. The potential quantifiable safety and societal benefits of modifying the existing regulatory requirements.

3. The potential impacts on small businesses of modifying the existing regulatory requirements.

4. The potential environmental impacts of modifying the existing regulatory requirements

IV. Regulatory Issues

A. Executive Order 12866, Executive Order 13563, and DOT Regulatory Policies and Procedures

Executive Orders 12866 (''Regulatory Planning and Review'') and 13563 (''Improving Regulation and Regulatory Review'') require agencies to regulate in the ''most cost-effective manner,'' to make a ''reasoned determination that the benefits of the intended regulation justify its costs,'' and to develop regulations that ''impose the least burden on society.''

Executive Order 13563 emphasizes the importance of quantifying both costs and benefits, of reducing costs, of harmonizing rules, and of promoting flexibility. This rule has been designated a ''significant regulatory action,'' although not economically significant, under section 3(f) of Executive Order 12866. Accordingly, the rule has been reviewed by the Office of Management and Budget (OMB). The ANPRM is considered a significant regulatory action under the Regulatory Policies and Procedures order issued by the Department of Transportation [44 FR 11034].

Executive PHMSA invites comments on this section. How should we approach the ''reverse logistics'' issue to ensure that we regulate in the ''most cost-effective manner?'' Please provide any cost or benefit figures to support that approach along with any sources that were used to obtain the information.

B. Executive Order 13132

E.O. 13132 requires agencies to assure meaningful and timely input by state and local officials in the development of regulatory policies that may have a substantial, direct effect on the states, on the relationship between the national government and the states, or on the distribution of power and responsibilities among the various levels of government. We invite state and local governments with an interest in this rulemaking to comment on any effect that revisions to the HMR relative to reverse logistics may cause.

C. Executive Order 13175

E.O. 13175 requires agencies to assure meaningful and timely input from Indian tribal government representatives in the development of rules that ''significantly or uniquely affect'' Indian communities and that impose ''substantial and direct compliance costs'' on such communities. We invite Indian tribal governments to provide comments if they believe there will be an impact.

D. Regulatory Flexibility Act, Executive Order 13272, and DOT Policies and Procedures

Under the Regulatory Flexibility Act of 1980 (5 U.S.C. 601 *et seq.*), we must consider whether a rulemaking would have a significant economic impact on a substantial number of small entities. ''Small entities'' include small businesses, not-for-profit organizations that are independently owned and operated and are not dominant in their fields, and governmental jurisdictions with populations under 50,000. If you believe that revisions to the HMR relative to reverse logistics would have a significant economic impact on a substantial number of small entities, please submit a comment to explain how and to what extent your business or organization could be affected and whether there are alternative approaches to this regulations the agency should consider that would minimize any significant impact on small business while still meeting the agency's statutory objectives

Any future proposed rule would be developed in accordance with Executive Order 13272 (''Proper Consideration of Small Entities in Agency Rulemaking'') and DOT's procedures and policies to promote compliance with the Regulatory Flexibility Act to ensure that potential impacts on small entities of a regulatory action are properly considered.

E. Paperwork Reduction Act

Section 1320.8(d), Title 5, Code of Federal Regulations requires that PHMSA provide interested members of the public and affected agencies an opportunity to comment on information collection and recordkeeping requests. It is possible that new or revised information collection requirements could occur as a result of any future rulemaking action. We invite comment on the need for any collection of information and paperwork burdens, if any.

F. National Environmental Policy Act

The National Environmental Policy Act of 1969, 42 U.S.C. 4321–4375, requires federal agencies to consider the consequences of major Federal actions and prepare a detailed statement on actions significantly affecting the quality of the human environment. Under regulations promulgated by the Council on Environmental Quality (CEQ), a federal agency may prepare an environmental assessment to determine whether it should prepare an environmental impact statement for a particular action. 40 CFR 1508.9(a). The environmental assessment should (1) briefly discuss the need for the proposed action, alternatives to the proposed action, and the probable environmental impacts of the proposed action and alternatives; and (2) include a listing of the agencies and persons consulted. 40 CFR 1508.9(b). PHMSA welcomes any data or information related to environmental impacts that may result from a reverse logistics rulemaking.

G. Privacy Act

Anyone is able to search the electronic form of any written communications and comments received into any of our dockets by the name of the individual submitting the document (or signing the document, if submitted on behalf of an association, business, labor union, etc.). You may review DOT's complete Privacy Act

''provide services for OEMs, ODMs and Branded Companies. Some of these services include, but are not limited to: Repair, customer service, parts management, end-of-life manufacturing, returns processing order fulfillment, help desk, and many aspects of field service repair.''

Statement in the **Federal Register** published on April 11, 2000 (65 FR 19477) or you may visit *http://www.dot.gov/privacy.html*.

H. Executive Order 13609 and International Trade Analysis

Under E.O. 13609, agencies must consider whether the impacts associated with significant variations between domestic and international regulatory approaches are unnecessary or may impair the ability of American business to export and compete internationally. In meeting shared challenges involving health, safety, labor, security, environmental, and other issues, international regulatory cooperation can identify approaches that are at least as protective as those that are or would be adopted in the absence of such cooperation. International regulatory cooperation can also reduce, eliminate, or prevent unnecessary differences in regulatory requirements.

Similarly, the Trade Agreements Act of 1979 (Pub. L. 96–39), as amended by the Uruguay Round Agreements Act (Pub. L. 103–465), prohibits Federal agencies from establishing any standards or engaging in related activities that create unnecessary obstacles to the foreign commerce of the United States. For purposes of these requirements, Federal agencies may participate in the establishment of international standards, so long as the standards have a legitimate domestic objective, such as providing for safety, and do not operate to exclude imports that meet this objective. The statute also requires consideration of international standards and, where appropriate, that they be the basis for U.S. standards.

PHMSA participates in the establishment of international standards in order to protect the safety of the American public, and we have assessed the effects of the proposed rule to ensure that it does not cause unnecessary obstacles to foreign trade. Accordingly, this rulemaking is consistent with E.O. 13609 and PHMSA's obligations under the Trade Agreement Act, as amended.

I. Statutory/Legal Authority for This Rulemaking

49 U.S.C. 5103(b) authorizes the Secretary of Transportation to prescribe regulations for the safe transportation, including security, of hazardous materials in intrastate, interstate, and foreign commerce. Our goal in this ANPRM is to gather the necessary information to determine a course of action in a potential Notice of Proposed Rulemaking (NPRM) associated with the issue of reverse logistics for the transportation of hazardous materials.

J. Regulation Identifier Number (RIN)

A regulation identifier number (RIN) is assigned to each regulatory action listed in the Unified Agenda of Federal Regulations. The Regulatory Information Service Center publishes the Unified Agenda in April and October of each year. The RIN contained in the heading of this document can be used to cross-reference this action with the Unified Agenda.

Issued in Washington, DC, on June 27, 2012 under authority delegated in 49 CFR part 106.

William Schoonover,

Deputy Associate Administrator for Field Operations, Pipeline and Hazardous Materials Safety Administration.

[FR Doc. 2012–16177 Filed 7–3–12; 8:45 am]

BILLING CODE 4910–60–P

DEPARTMENT OF THE INTERIOR

Fish and Wildlife Service

50 CFR Part 17

[Docket No. FWS–R4–ES–2012–0030; 4500030113]

Endangered and Threatened Wildlife and Plants; 90-Day Finding on a Petition To List Maytenus cymosa as Endangered or Threatened

AGENCY: Fish and Wildlife Service, Interior.

ACTION: Notice of 90-day petition finding.

SUMMARY: We, the U.S. Fish and Wildlife Service (Service), announce a 90-day finding on a petition to list the *Maytenus cymosa* (Caribbean mayten), a tree, as endangered or threatened under the Endangered Species Act of 1973, as amended (Act), and to designate critical habitat. Based on our review, we find that the petition does not present substantial information indicating that listing *M. cymosa* may be warranted. Therefore, we are not initiating a status review in response to this petition. However, we ask the public to submit to us any new information that becomes available concerning the status of, or threats to, *M. cymosa* or its habitat at any time.

DATES: The finding announced in this document was made on July 5, 2012.

ADDRESSES: This finding is available on the Internet at *http://www.regulations.gov* at Docket Number FWS–R4–ES–2012–0030. Supporting documentation we used in preparing this finding is available for public inspection, by appointment, during normal business hours at the U.S. Fish and Wildlife Service, Caribbean Ecological Services Field Office (CESFO), P.O. Box 491, Boquerón, PR 00622. Please submit any new information, materials, comments, or questions concerning this finding to the above address.

FOR FURTHER INFORMATION CONTACT: Marelisa Rivera, Deputy Field Supervisor of the Caribbean Ecological Services Field Office (see **ADDRESSES**), by telephone at 787–851–7297, or by facsimile at 787–851–7440. If you use a telecommunications device for the deaf (TDD), please call the Federal Information Relay Service (FIRS) at 800–877–8339.

SUPPLEMENTARY INFORMATION:

Background

Section 4(b)(3)(A) of the Act (16 U.S.C. 1531 *et seq.*) requires that we make a finding on whether a petition to list, delist, or reclassify a species presents substantial scientific or commercial information indicating that the petitioned action may be warranted. We are to base this finding on information provided in the petition, supporting information submitted with the petition, and information otherwise available in our files. To the maximum extent practicable, we are to make this finding within 90 days of our receipt of the petition, and publish our notice of the finding promptly in the **Federal Register**.

Our standard for substantial scientific or commercial information within the Code of Federal Regulations (CFR) with regard to a 90-day petition finding is ''that amount of information that would lead a reasonable person to believe that the measure proposed in the petition may be warranted'' (50 CFR 424.14(b)). If we find that substantial scientific or commercial information was presented, we are required to promptly conduct a species status review, which we subsequently summarize in our 12-month finding.

Petition History

On October 6, 2011, we received a petition, dated September 28, 2011, from Mark N. Salvo of Wild Earth Guardians, requesting that *Maytenus cymosa* be listed as endangered or threatened, and that critical habitat be designated, under the Act. The petition clearly identified itself as such and included the requisite identification information for the petitioner, as required by 50 CFR 424.14(a). The Service acknowledged receipt of the

petition in a letter dated December 20, 2011, which also stated that emergency listing was not warranted. This finding addresses the petition.

Previous Federal Action(s)

Maytenus cymosa was included as a category 2 candidate species in **Federal Register** notices dated December 30, 1982 (47 FR 58454), September 27, 1985 (50 FR 39526), January 6, 1989 (54 FR 554), November 21, 1991 (56 FR 58804), September 30, 1993 (58 FR 51144) and November 15, 1994 (59 FR 58982). Category 2 candidates were taxa for which information was available indicating that listing was possibly appropriate, but insufficient data were available regarding biological vulnerability and threats. In the February 28, 1996, Notice of Review (61 FR 7595), we discontinued the use of multiple candidate categories and removed category 2 species from the candidate list, which removed *M. cymosa* from the candidate species list.

Species Information

Maytenus cymosa is a medium-size tree of the Celastraceae family. It grows up to 8 meters (m) (26.7 feet (ft)) tall and the trunk diameter may reach up to 15 centimeters (cm) (6 inches (in)) with a blackish and slightly fissured bark. The species possesses alternate leaves with oval to obovate (egg-shaped) leaf-blades that are 2.5–6 cm (1.0–2.4 in) long and 1.5–4 cm (0.6–1.6 in) broad. The leaves are rounded at the apex, obtuse to narrowed or rounded at the base with margins slightly recurved, 5–8 millimeters (mm) (0.2–0.32 in) long, few lateral nerves, paler beneath. Flowers grow on axillary cymes (clusters of flowers arising from the junction between leaves and stem) and are subglomerate (almost tightly clustered). Flowers are 2.5 mm (1.0 in) long, with suborbicular sepals 0.8 mm (0.32 in) long and 1–1.2 mm (0.04–0.048 in) broad. Petals are pale yellow and oval and 1.8–2 mm (0.072–0.08 in) long. The fruit is a blackish-elliptic capsule 1 cm (0.4 in) long, which produces 1 or more seeds with a fleshy aril (covering) (Liogier 1994, p. 27; Little *et al.* 1974, p. 466).

The species occurs on dry to moist coastal woodlands in Puerto Rico at elevations below 100 feet (i.e., Piñeros Island, Vieques and Fajardo), in the U.S. Virgin Islands (USVI; St. Croix and St. Thomas), and in the British Virgin Islands (Virgin Gorda) (Little *et al.* 1974, p. 466). In Puerto Rico, its distribution seems to be limited to the eastern corner of the island and the adjacent small islands and cays (Liogier 1994, p. 27; Little *et al.* 1974, p. 466).

Based on the petition and the information available in our files, the largest population of *Maytenus cymosa* is located within the Gorda Peak National Park on the island of Virgin Gorda in the British Virgin Islands and is composed of about 100 individuals (IUCN 2011, p. 1). The petition further states that a single tree was recorded at Savannah Bay on Virgin Gorda. However, no data were provided in the petition regarding current population trends to support an assumption that the number of individuals has been declining or that the populations are facing problems that may lead to the species' extinction. The petition reports another 52 individuals in eastern Puerto Rico within 2 localities, but no data about the exact localities of these populations, or about population trends, were provided in the petition or are available in our files. Furthermore, no data are available regarding the number of individuals at St. Croix and St. Thomas.

We accept the characterization of *Maytenus cymosa* as a species because it is recognized as a valid species on the latest treatments and revisions of the flora of the Caribbean (Liogier and Martorel 2000, p. 109; Liogier 1994, p. 27; Little *et al.* 1974, p. 466).

Evaluation of Information for This Finding

Section 4 of the Act (16 U.S.C. 1533) and its implementing regulations at 50 CFR 424 set forth the procedures for adding a species to, or removing a species from, the Federal Lists of Endangered and Threatened Wildlife and Plants. A species may be determined to be an endangered or threatened species due to one or more of the five factors described in section 4(a)(1) of the Act:

(A) The present or threatened destruction, modification, or curtailment of its habitat or range;

(B) Overutilization for commercial, recreational, scientific, or educational purposes;

(C) Disease or predation;

(D) The inadequacy of existing regulatory mechanisms; or

(E) Other natural or manmade factors affecting its continued existence.

In considering what factors might constitute threats, we must look beyond the mere exposure of the species to the factor to determine whether the species responds to the factor in a way that causes actual impacts to the species. If there is exposure to a factor, but no response, or only a positive response, that factor is not a threat. If there is exposure and the species responds negatively, the factor may be a threat and we then attempt to determine how significant a threat it is. If the threat is significant, it may drive or contribute to the risk of extinction of the species such that the species may warrant listing as threatened or endangered as those terms are defined by the Act. This does not necessarily require empirical proof of a threat. The combination of exposure and some corroborating evidence of how the species is likely impacted could suffice. The mere identification of factors that could impact a species negatively may not be sufficient to compel a finding that listing may be warranted. The information shall contain evidence sufficient to suggest that these factors may be operative threats that act on the species to the point that the species may meet the definition of threatened or endangered under the Act.

In making this 90-day finding, we evaluated whether information regarding the threats to *Maytenus cymosa,* as presented in the petition and available in our files at the time the petition was received, is substantial, thereby indicating that the petitioned action may be warranted. Our evaluation of this information is presented below.

A. The Present or Threatened Destruction, Modification, or Curtailment of Its Habitat or Range

Information Provided in the Petition

The petition claims that the recorded populations of *Maytenus cymosa* in Puerto Rico and the USVI may occur on lands with differing ownerships where they may be threatened by land use and habitat fragmentation. The petition also indicates that the largest population of *M. cymosa* (about 100 trees) occurs in a National Park on Virgin Gorda in the British Virgin Islands.

Evaluation of Information Provided in the Petition and Available in Service Files

The petition does not provide any information about specific threats (for example, road construction, hotel developments, or housing developments) to the populations of *Maytenus cymosa* or evidence indicating that specific land uses or habitat fragmentation are responsible for actual or even foreseeable decline in the number of individuals. Neither the information in the petition or available in our files provides any recent population assessments, which may provide information regarding current abundance, distribution, and threats. As to the population in Gorda Peak National Park, which is the largest population, the British Virgin Islands

National Parks Trust (BVINPT) conducts weekly trail maintenance, garbage removal, and removal of overhanging branches within the Park. Protection of rare and endangered plants (including this species) was a primary reason for designation of the park, according to the British Virgin Islands Protected Areas System Plan 2007–2017 (BVINPT 2008, p. 109). While the plan lists internal and external threats to the park (e.g., limited cattle grazing, invasive species, forest fires, small-scale agricultural activity, and plant collection (mainly orchids), neither the plan nor the petition identifies any of these threats as specifically affecting *M. cymosa* (BVINPT 2008, p. 109).

Maytenus cymosa also has been recorded on the island of Vieques, in eastern Puerto Rico (Monsegur 2007), where it was collected by Gary Breckon (former botanist of the University of Puerto Rico at Mayagüez). About 54 percent of the island of Vieques (about 17,673 acres (7,152 hectares)) is a National Wildlife Refuge (NWR) managed by the Service, which contains suitable habitat for the species (Vieques NWR CCP & EIS 2007, p. 2). The amount of suitable habitat for the species on the island is unknown, but it is known to occur outside of the Refuge, based on the previously mentioned collection. The area of Cerro El Buey, which harbors a habitat similar to the area where Breckon collected the species, is under protection as it was transferred to the Puerto Rico Conservation Trust (Trust) (Vieques NWR CCP & EIS 2007, p. 2, 19). Currently, the Trust manages about 800 acres (323.7 ha) for conservation, including the area of Cerro El Buey. Furthermore, the Service manages about 3,100 acres on western Vieques including the area of Monte Pirata, also a remnant of possible habitat for the species. The majority of the refuge (eastern conservation unit) (approximately 14,669 acres (5936.3 ha)) remains closed to the public due to unexploded ordnance. Due to its use as a Live Impact area, some of the eastern conservation area will be managed as a wilderness area, with no public access permitted (Vieques NWR CCP & EIS 2007, p. 3). This has the effect of preventing researchers from determining the full extent of the range of the species on the island. Therefore, while we acknowledge that areas outside of the Refuge are not officially protected, the majority of the habitat on the island remains protected.

Maytenus cymosa was also recorded on Piñeros Island, part of the former Roosevelt Roads Naval Station in Puerto Rico. This island is currently under a munitions and explosives of concern (MEC) investigation to identify and remove unexploded artifacts. The MEC investigation accounts for the presence of *M. cymosa* and requires the presence of a qualified biologist able to identify the species during any removal activities (Department of the Navy, Naval Facilities Engineering Command, Atlantic Division, 2006, p. 5–1). The Removal Plan (associated with the MEC investigation) states that *M. cymosa* is common on Piñeros Island and impacts to the species will be avoided during unexploded artifacts removal activities. Work will occur largely on trails, and munitions are expected to be removed by hand. The Navy, Naval Facilities Engineering Command, Atlantic Division, plans to transfer Piñeros Island to the Commonwealth of Puerto Rico and has suggested an approach that will allow public access to Piñeros Island while protecting the ecology of the island by disturbing only a small fraction of the vegetation (Department of the Navy, Naval Facilities Engineering Command, Atlantic Division, 2006, p. 1–8).

In summary, the petition claims *Maytenus cymosa* may be threatened by land use and habitat fragmentation, but does not provide any substantive data or information to support the assumption that these threats are acting on *M. cymosa* in such a way as to render the species vulnerable to extinction. In contrast, information in our files indicates that the species is protected in many areas where it is found. Therefore, we find that the information provided in the petition and available in our files does not present substantial scientific or commercial information indicating that the petitioned action may be warranted due to the present or threatened destruction, modification, or curtailment of its habitat or range.

B. Overutilization for Commercial, Recreational, Scientific, or Educational Purposes

The petitioner does not identify this factor as a current threat to the species. Based on the information available in our files, there are no data to suggest that overutilization for commercial, recreational, scientific, or educational purposes has contributed to a decline of the *Maytenus cymosa.* We find that the information provided in the petition and available in our files does not present substantial scientific or commercial information indicating that the petitioned action may be warranted due to overutilization for commercial, recreational, scientific, or educational purposes.

C. Disease or Predation

The petitioner does not identify this factor as a current threat to the species. Based on the information available in our files, there are no data that suggest that disease or predation has contributed to a decline of *Maytenus cymosa* or that either is a current threat to the species. We find that the information provided in the petition and available in Service files does not present substantial scientific or commercial information indicating that the petitioned action may be warranted due to disease or predation.

D. The Inadequacy of Existing Regulatory Mechanisms

Information Provided in the Petition

The petition notes that the British Virgin Islands has an environmental charter that required development of a Protected Areas System Plan, and promulgated environmental ordinances for the conservation and management of National Parks. The petitioner states that, despite these policies and ordinances, habitat loss and degradation continues in the British Virgin Islands and *Maytenus cymosa* may not be adequately protected on Virgin Gorda outside of the Gorda Peak National Park.

Evaluation of Information Provided in the Petition and Available in Service Files

As discussed under Factor A, the petition does not provide any substantial information about specific threats resulting in habitat loss and degradation to *Maytenus cymosa* populations or evidence indicating that urban development and habitat fragmentation may be responsible for a decline in the number of *M. cymosa* individuals. The petition does not provide population data on the existing populations outside the National Park. Furthermore, the core of the known populations (about 100 individuals) lies within the Gorda Peak National Park. Individuals within the National Park are provided protection from some threats, such as urban development and habitat fragmentation.

The Territory of the USVI currently considers *Maytenus cymosa* to be endangered under the Virgin Islands Indigenous and Endangered Species Act (V.I. Code, Title 12, Chapter 2) and has amended an existing regulation (Bill No. 18–0403) to provide for protection of endangered and threatened wildlife and plants by prohibiting the take, injury, or possession of indigenous plants. While we have previously recognized in other listing rules that Rothenberger et al. (2008, p. 68) mentioned that the lack of

management and enforcement capacity continues to be a significant challenge for the USVI, even given the relatively wide range of the species, we have no evidence to indicate that collection or habitat loss may be expected to threaten the species now or in the future; therefore, we have no specific information indicating that regulatory mechanisms may be inadequate to protect the species.

In Puerto Rico, the species is considered as a critical element by the Puerto Rico Department of Natural and Environmental Resources. Critical elements are described in the Comprehensive Wildlife Conservation Strategy as federally or locally listed species, species important to Puerto Rican heritage, and some endemic species (DNER, 2005, p.54). This classification does not provide regulatory protection to *M. cymosa,* but does require special consideration by Commonwealth agencies when evaluating development projects that may impact the species. As stated previously, we have no evidence of current or future threats to the species; therefore, we have no evidence that this regulatory mechanism may be inadequate to protect the species, at present.

In summary, the petition does not provide any substantial information documenting the inadequacy of existing regulatory mechanisms nor do we have any such information in our files. Therefore, we find that the information provided in the petition and currently available in our files does not present substantial scientific or commercial information indicating that the petitioned action may be warranted due to the inadequacy of existing regulatory mechanisms.

E. Other Natural or Manmade Factors Affecting Its Continued Existence

Information Provided in the Petition

The petition indicates that the small number of remaining *Maytenus cymosa* trees may have a negative effect on the species' genetic diversity and may render it vulnerable to stochastic events, as small populations are more likely to go extinct as a result of these events. The petition further states that the Service has frequently recognized small population size as a threat to the persistence of species.

The petition also indicates that the population of *Maytenus cymosa* in Gorda Peak National Park on Virgin Gorda may have been affected by fire in 1997, and that the species may be vulnerable to future fires in that location. The petition further claims that individual trees may have been affected by Hurricane Hugo, and the species may have been affected by subsequent hurricanes and weather events.

Evaluation of Information Provided in the Petition and Available in Service Files

The petition does not provide any information to support a claim that the populations have actually declined, resulting in a negative effect on the genetic diversity of the species that would render it vulnerable to extinction. We have no information in our files about the genetics of the species or any information about the reproductive biology or population dynamics of *M. cymosa* to suggest that low genetic diversity may be a threat to the species. While small population is identified in the petition as a threat to the species, there is no information either in the petition or in our files to indicate that small population size may be having a negative effect on the species. Moreover, the species occurs on several islands rendering it less likely to be affected by stochastic events, and as we have explained, we have no information indicating that low genetic diversity may be a threat.

The petition does not provide any information, nor do we have any in our files, indicating that *Maytenus cymosa* was directly affected, or that its habitat was degraded, by the 1997 fire. The petition did not present substantial information to support the assertion that fire may be a threat to the species.

The petition does not provide any information, nor do we have any information in our files, indicating that *Maytenus cymosa* was directly affected, or its habitat was degraded, by severe tropical storms. It has been stated that successional responses to hurricanes can influence the structure and composition of plant communities in the Caribbean islands (Van Bloem *et al.* 2005). Nonetheless, as a species endemic to the Caribbean, it is likely that *M. cymosa* may be well adapted to these tropical weather events. Severe tropical storms may affect very small populations that are threatened by a lack of natural recruitment or that lie within areas subject to soil erosion or landslides. However, based on the petition and the information available in our files, there is no evidence suggesting that *M. cymosa* may be currently threatened by hurricanes and other weather events.

We find that the information provided in the petition and currently available in Services files does not present substantial scientific or commercial information indicating that the petitioned action may be warranted due to other natural or manmade factors (genetic diversity, fires, or hurricanes).

Finding

In summary, the petition does not present substantial information that listing *Maytenus cymosa* as an endangered or threatened species may be warranted. The core of the known population lies within a protected area (i.e., Gorda Peak National Park). The petition does not provide any substantial information or data indicating that the present or threatened destruction, modification, or curtailment of its habitat or range may be a current or future threat to the species. *M. cymosa* also occurs within Piñeros Island, an area managed for conservation, and within the island of Vieques, which has a substantial land area designated as a National Wildlife Refuge and managed by the Service, which supports habitat for the species. The known distribution of *M. cymosa* includes territories that currently have regulations and laws that protect the species and its habitat. Neither the information provided by the petitioner nor the information available in files indicates that the species may be currently affected by genetic problems, human-induced fires, or hurricanes. The petitioner did not provide any further information regarding the ecology or reproductive biology of *M. cymosa* (e.g., lack of pollinators and/or fruit dispersors, lack of natural recruitment, etc.) that would suggest synergistic forces may be acting on *M. cymosa,* making it vulnerable to extinction.

Therefore, on the basis of our analysis under section 4(b)(3)(A) of the Act, we conclude that the petition does not present substantial scientific or commercial information to indicate that listing *Maytenus cymosa* under the Act as endangered or threatened may be warranted at this time. Although we will not review the status of the species at this time, we encourage interested parties to continue to gather data that will assist with the conservation of *M. cymosa.* If you wish to provide information regarding *M. cymosa,* you may submit your information or materials to the Deputy Field Supervisor, Caribbean Ecological Services Field Office (see **ADDRESSES**), at any time.

References Cited

A complete list of references cited is available on the Internet at *http://www.regulations.gov* at Docket No. FWS–R4–ES–2012–0030 and upon request from the Caribbean Ecological

Services Field Office (see **FOR FURTHER INFORMATION CONTACT**).

Author

The primary authors of this notice are the staff members of the Caribbean Ecological Services Field Office (see **ADDRESSES**).

Authority: The authority for this action is the Endangered Species Act of 1973, as amended (16 U.S.C. 1531 *et seq.*).

Dated: June 20, 2012.

Daniel M. Ashe,

Director, U.S. Fish and Wildlife Service.

[FR Doc. 2012–16381 Filed 7–3–12; 8:45 am]

BILLING CODE 4310–55–P

DEPARTMENT OF THE INTERIOR

Fish and Wildlife Service

50 CFR Part 17

[Docket No. FWS–ES–R8–2012–0024; 4500030113]

Endangered and Threatened Wildlife and Plants; 90-Day Finding on a Petition To List a Distinct Population Segment of the American Black Bear in Nevada as Endangered or Threatened

AGENCY: Fish and Wildlife Service, Interior.

ACTION: Notice of 90-day petition finding.

SUMMARY: We, the U.S. Fish and Wildlife Service, announce a 90-day finding on a petition to list a distinct population segment (DPS) of the American black bear (*Ursus americanus*) in Nevada as endangered or threatened under the Endangered Species Act of 1973, as amended (Act). For the purposes of this finding, we evaluated whether the petition presents substantial information to indicate whether the petitioned entity (the DPS of the American black bear in Nevada) may be a listable entity. Based on our review, we conclude that the petition does not provide substantial information indicating that the DPS of the American black bear in Nevada may be a listable entity under the Act. Because the petition does not present substantial information indicating that the American black bear in Nevada may be a listable entity, we did not evaluate whether the information contained in the petition regarding threats was substantial. Therefore, we are not initiating a status review in response to this petition. However, we ask the public to submit to us any new information that becomes available concerning the status of, or threats to, the American black bear in Nevada or its habitat at any time.

DATES: The finding announced in this document was made on July 5, 2012.

ADDRESSES: This finding is available on the Internet at *http://www.regulations.gov* at Docket Number [FWS–ES–R8–2012–0024]. Supporting documentation we used in preparing this finding is available for public inspection, by appointment, during normal business hours at the U.S. Fish and Wildlife Service, Nevada Fish and Wildlife Office, 1340 Financial Boulevard, Suite 234, Reno, Nevada 89502–7147. Please submit any new information, materials, comments, or questions concerning this finding to the above address.

FOR FURTHER INFORMATION CONTACT: Edward D. Koch, State Supervisor of the Nevada Fish and Wildlife Office (see **ADDRESSES**), by telephone 775–861–6300 or by facsimile to 775–861–6301. If you use a telecommunications device for the deaf (TDD), please call the Federal Information Relay Service (FIRS) at 800–877–8339.

SUPPLEMENTARY INFORMATION:

Background

Section 4(b)(3)(A) of the Act (16 U.S.C. 1531 *et seq.*) requires that we make a finding on whether a petition to list, delist, or reclassify a species presents substantial scientific or commercial information indicating that the petitioned action may be warranted. We are to base this finding on information provided in the petition, supporting information submitted with the petition, and information otherwise available in our files. To the maximum extent practicable, we are to make this finding within 90 days of our receipt of the petition, and publish our notice of the finding promptly in the **Federal Register**.

Our standard for substantial scientific or commercial information within the Code of Federal Regulations (CFR) with regard to a 90-day petition finding is ''that amount of information that would lead a reasonable person to believe that the measure proposed in the petition may be warranted'' (50 CFR 424.14(b)). If we find that substantial scientific or commercial information was presented, we are required to promptly conduct a species status review, which we subsequently summarize in our 12-month finding.

Petition History

On September 6, 2011, we received a petition dated September 1, 2011, from Big Wildlife and NoBearHuntNV.org, requesting that the American black bear in Nevada be designated as a DPS and listed as endangered or threatened under the Act. The petition clearly identified itself as such and included the requisite identification information for the petitioners, as required by 50 CFR 424.14(a). In a November 4, 2011, letter to the petitioner, we responded that we reviewed the information presented in the petition and determined that issuing an emergency regulation temporarily listing the species under section 4(b)(7) of the Act was not warranted. We also stated that due to a requirement to complete a significant number of listing and critical habitat actions in Fiscal Year 2012, pursuant to court orders, judicially approved settlement agreements, and other statutory deadlines, we would conduct our review of the petition when we secured funding for the action. At that point, we anticipated making an initial finding on the petition. This finding addresses the petition.

Previous Federal Action(s)

No previous Federal actions have been conducted specifically for American black bears in Nevada. Federal actions have been conducted for black bears in other states, as discussed below.

On February 15, 1983 (48 FR 6752), the Service included the black bear in Pennsylvania in a list of various petitions; the Service determined that the petition to list the black bear in Pennsylvania did not provide substantial information.

On June 21, 1990, the Service published a proposed rule (55 FR 25341) to list the Louisiana black bear (*Ursus americanus luteolus*) as threatened in Louisiana, Mississippi, and Texas. In addition, the Service proposed a designation of threatened for other black bear subspecies found within the range of the Louisiana black bear (Louisiana, Mississippi, Texas) based on similarity of appearance. On January 7, 1992, a final rule was published in the **Federal Register** (57 FR 588) designating threatened status for the Louisiana black bear and other black bears within its range due to similarity of appearance.

Species Information

American black bears are large mammals with fur color that can be black or cinnamon (Hall 1946, p. 171). They are considered plantigrades (walk on whole sole of foot) and both the front and rear feet have five toes; claws are longer on the front feet than on the hind feet, and the tail is short (Hall 1946, p. 171). The profile is rather blunt; the eyes are small, and the nose pad is

broad with large nostrils (57 FR 588). During summer, adult males generally weigh between 300 and 350 pounds (lbs) (135–158 kilograms (kg)) and adult females about 150 lbs (68–90 kg) (Lackey 2004, p. 8). Large males may weigh in excess of 600 lbs (272 kg), but weight varies greatly throughout the species' range (57 FR 588).

According to Hall (1981, p. 950), there are 16 subspecies of black bear in North America. Collectively, these subspecies number approximately 800,000–900,000 bears in North America with about 400,000 in the United States (Williamson 2002, p. 12; Renda 2010a, no page number; Big Wildlife and NoBearHuntNV.org 2011, p. 6).

The American black bear is adaptable and inhabits forests, swamps, tundra, and even the edges of suburbia (Bowers *et al.* 2004, p. 142; Big Wildlife and NoBearHuntNV.org 2011, p. 7). American black bears are considered omnivores, able to eat many types of plant and animal material including fruits, berries, nuts, roots, grass, seeds, grubs, birds, fish, small mammals, and carrion (Bowers *et al.* 2004, p. 143; Big Wildlife and NoBearHuntNV.org 2011, p. 8). They are considered intelligent, with learning capabilities (Jonkel 1978, p. 227; Big Wildlife and NoBearHuntNV.org 2011, p. 7). In addition, they are tolerant of humans (Lackey 2004, p. 13). American black bears have learned to associate humans (including their homes and vehicles) with food, leading some black bears to move into urban areas (Lackey 2004, p. 13). This can lead to conflict or damage between the two species (Beckmann and Berger 2003, pp. 595–596; Beckmann and Lackey 2004, p. 269; Lackey 2004, p. 23; Breck *et al.* 2008, p. 429; Big Wildlife and NoBearHuntNV.org 2011, p. 7).

Bears, in general, are wide-ranging animals with low reproductive rates and low population densities (Jonkel 1978, pp. 227, 231). The size of the habitat needed by bears is generally related to the abundance and availability of food (Jonkel 1978, p. 238) and the age and sex of the bear (Lackey 2004, p. 13). Males will have larger home ranges than females and may overlap with other males and females (Lackey 2004, p. 13). Bears can live within home ranges that are small, provided there are many available foods (Jonkel 1978, p. 238). American black bear home ranges have been recorded to be as small as 1 square mile (mi^2) (2.6 square kilometers) (km^2) (Jonkel 1978, p. 238). American black bears are capable of moving considerable distances in their search for food or mates, and they are known to return to their former habitat upon relocation (Beckmann and Lackey 2004, pp. 270–271; Big Wildlife and NoBearHuntNV.org 2011, p. 7).

Sexual maturity for American black bear males occurs at about 4–6 years of age; the age of sexual maturity for females is about 4–5 years (Lackey 2004, p. 11). American black bears mate in the spring, with the embryo(s) implanting in the fall; generally two or three cubs are born in January or February (Bowers *et al.* 2004, p. 142). The cubs do not emerge from the den until spring and stay with their mother until they are about 18 months old, at which time they disperse (Bowers *et al.* 2004, p. 142).

American black bears in western Nevada belong to the subspecies *Ursus americanus californiensis,* which is found in the Sierra Nevada of California and Nevada and the Cascade Range of northern California and south central Oregon (Hall 1981, pp. 949–950). Known as the Sierra Nevada population, it is estimated to consist of 10,000–15,000 individuals (Renda 2010b, no page number). We accept the characterization of all American black bears in Nevada as subspecies *U. a. californiensis* based on Hall (1981, pp. 949–950) and Lackey (2004, p. 30).

Hall (1946, pp. 171, 175) indicates that the historical distribution of American black bears in Nevada occurred near the vicinity of Lake Tahoe (Douglas and Washoe Counties, Nevada) on the border of Nevada and California. However, Lackey (2004, pp. 2–3, 15) states that the American black bear in Nevada historically occurred in several mountain ranges in the northeastern (Jarbidge and Ruby), central (Toiyabe), and western (Sierra Nevada) portions of the State.

Currently, American black bears in Nevada are known to occur in the Carson (includes Lake Tahoe), Sweetwater, Pine Nut, and Wassuk Ranges of western Nevada (Beckmann and Berger 2003, p. 597; Lackey 2004, p. 19; Big Wildlife and NoBearHuntNV.org 2011, p. 7). Goodrich (1993 cited in Lackey 2004, p. 15) mentions these ranges and also includes the Excelsior Range in Mineral County. Confirmed recent American black bear sightings have occurred in the Delano, Independence, and Jarbidge Mountains of Elko County; the Schell Creek Range of White Pine County; and the Vya Rim of northern Washoe County (Nevada Department of Wildlife (NDOW), unpublished data cited in Lackey 2004, p. 15). These sightings may indicate that the American black bear in Nevada is expanding its range eastward (Lackey 2004, p. 30).

There are currently an estimated 150–300 adult American black bears living on the Nevada side of the Lake Tahoe Basin and in the mountain ranges to the south (Sonner 2011, no page number, Big Wildlife and NoBearHuntNV.org 2011, p. 6). During the early 1990s in Nevada, wild-land American black bears (bears with almost 100 percent of their point locations outside of urban areas, in the Carson Range of the Sierra Nevada, Sweetwater Range, Pine Nut Range, and Wassuk Range) were at a density of 20–40 bears/39 mi^2 (20–40 bears/100 km^2) (Beckmann and Berger 2003, pp. 597–598). During the late 1990s and early 2000s, urban-interface American black bears (bears with 90 percent or more of their point locations inside urban areas defined by town and city delineation in Carson City, Incline Village, Glenbrook, Stateline, Minden, and Gardnerville, Nevada and South Lake Tahoe, California), which did not exist in the late 1980s (Goodrich 1990 cited in Beckmann and Berger 2003, p. 598), reached a density of 120 bears/39 mi^2 (120 bears/100 km^2) (Beckmann and Berger 2003, pp. 597–598). Wild-land American black bears were found at a density of 3.2 bears/39 mi^2 (3.2 bears/100 km^2) during the same period (Beckmann and Berger 2003, p. 598). The availability of food resources, such as garbage, in urban areas is suggested to have resulted in a redistribution of American black bears across the landscape in Nevada (Beckmann and Berger 2003, p. 602), likely increasing the number of American black bears in urban-interface areas while decreasing the number of American black bears in wild-land areas.

Nevada Department of Wildlife estimates that the American black bear population in Nevada is growing at an annual rate of 16 percent (Sonner 2011, no page number). Beckmann and Berger (2003, p. 602) were uncertain if the American black bear population had increased in their western Nevada study area (Carson, Sweetwater, Pine Nut, and Wassuk Ranges). While these authors reported population numbers similar to Goodrich (1990 cited in Beckmann and Berger 2003, p. 602), they suggested that the increase in numbers may be the result of a shift of individuals from wild-land areas to urban-interface areas rather than an increase in population size. During 1997–2002, Beckmann (2002, p. 20) and Beckmann and Berger (2003, p. 602) estimated Nevada's American black bear population at about 300 in the Carson, Sweetwater, Pine Nut, and Wassuk Ranges collectively. This number is similar to an estimate of 150–290 animals in the same population based on an extrapolation of Goodrich's density

estimate of 20–41 bears/39 mi² (20–41 bears/100km²) (Goodrich 1990 cited in Beckmann 2002, p. 20; Beckmann and Berger 2003, p. 602) to the total area of available habitat. The petitioners did not provide, nor do we have in our files, the information NDOW used to determine that the American black bear population in Nevada is increasing at an annual rate of 16 percent. While the petition presents information on the total number of mortalities (104) that occurred during the period from 1997 to 2004, we do not have data that indicate the American black bear population in Nevada is declining as stated in the petition (Big Wildlife and NoBearHuntNV.org 2011, p. 9). Based on the petition and information available in our files indicating past population estimates, the current American black bear population in Nevada appears to be stable.

Review of Petition

The petition requests that the American black bear in Nevada be listed as a DPS under the Act. The petition states that the American black bear in Nevada is threatened by habitat loss due primarily to residential development and recreational encroachment (Big Wildlife and NoBearHuntNV.org 2011, p. 5). The petition also states that, due to increasing interactions with humans, anthropogenic killing of these bears is identified as significant and increasing (Big Wildlife and NoBearHuntNV.org 2011, p. 5). In addition, NDOW authorized, for the first time, a fall hunt in 2011; the petition asserts that hunting will further endanger this population (Big Wildlife and NoBearHuntNV.org 2011, p. 5).

The petition asserts that the American black bear in Nevada should be listed under the Act as a DPS because Nevada's black bears are markedly separated (discrete) from other populations of American black bears due to physical and behavioral factors (Big Wildlife and NoBearHuntNV.org 2011, p. 13). The petition cites Breck *et al.* (2008) in support of genetic and behavioral differences related to conflict behavior between people and American black bear populations in Yosemite National Park, California, and Lake Tahoe Basin, Nevada (Big Wildlife and NoBearHuntNV.org 2011, p. 13).

The petition also asserts that the American black bear population in Nevada is significant due to the bear's continued existence in western Nevada since the early 1990s in forested, mountain range habitat that is isolated by wide desert valleys; however, the petition notes that American black bears will occasionally use the desert valleys in Nevada for travel between mountain ranges (Big Wildlife and NoBearHuntNV.org 2011, p. 13). The petition asserts that this bear habitat in western Nevada is characteristic of the unique Great Basin ecosystem (Big Wildlife and NoBearHuntNV.org 2011, p. 13). The petition asserts that loss of the American black bear population in Nevada would result in a significant gap in the species' range because this population is genetically and behaviorally distinct from other American black bears as indicated above, and, therefore, a unique population would be lost (Big Wildlife and NoBearHuntNV.org 2011, p. 14).

Evaluation of Listable Entity

Under the Service's Policy Regarding the Recognition of Distinct Vertebrate Population Segments Under the Endangered Species Act (61 FR 4722, February 7, 1996), three elements are considered in the decision concerning the establishment and classification of a possible DPS. These are applied similarly for additions to or removal from the Federal List of Endangered and Threatened Wildlife. These elements include:

(1) The discreteness of a population in relation to the remainder of the taxon to which it belongs;

(2) The significance of the population segment to the taxon to which it belongs; and

(3) The population segment's conservation status in relation to the Act's standards for listing, delisting (removal from the list), or reclassification (*i.e.,* is the population segment endangered or threatened).

In this analysis, we evaluate whether the petition provides substantial information that the American black bear in Nevada may constitute a DPS.

Discreteness

Under the DPS policy, a population segment of a vertebrate taxon may be considered discrete if it satisfies either one of the following conditions:

(1) It is markedly separated from other populations of the same taxon as a consequence of physical, physiological, ecological, or behavioral factors. Quantitative measures of genetic or morphological discontinuity may provide evidence of this separation.

(2) It is delimited by international governmental boundaries within which differences in control of exploitation, management of habitat, conservation status, or regulatory mechanisms exist that are significant in light of section 4(a)(1)(D) of the Act.

The petition asserts that American black bears in Nevada should be listed under the Act as a DPS because they are markedly separate from other populations of American black bears due to physical and behavioral factors, citing Breck *et al.* (2008) (Big Wildlife and NoBearHuntNV.org 2011, p. 13). Review of Breck *et al.* (2008) does not support this assertion. Breck *et al.* (2008, p. 428) investigated whether food-conditioning behavior (discussed more fully in the following paragraphs) was inherited or learned through parent-offspring social learning. This study involved the collection of genetic samples (blood and hair) from two American black bear populations: Lake Tahoe Basin, Nevada, and Yosemite National Park, California. Both populations evaluated in this study comprised individuals who were not food-conditioned as well as those who were food-conditioned (Breck *et al.* 2008, pp. 431–432). Breck *et al.* (2008) used genetic data to determine relatedness of individuals through mother–offspring and sibling relationships within each population. These relationships were then used to determine how food-conditioning behavior was acquired. If behavior is inherited or if parent-offspring learning is a dominant means for obtaining behavior, then behaviors that are of significant advantage should lead to subpopulations of related individuals with similar behaviors (Breck *et al.* 2008, p. 428).

Breck *et al.* (2008) did not analyze their genetic data to evaluate the degree of genetic divergence between the Lake Tahoe Basin, Nevada, and Yosemite National Park, California populations. In order to determine the degree of genetic similarity among populations, genetic material should be obtained from many individuals from different geographic areas to assess patterns and amounts of gene flow among populations (Allendorf and Luikart 2007, pp. 393–394). The genetic information presented in Breck *et al.* (2008, pp. 430–431) does not support the petition's assertion that the American black bear population in Nevada is markedly separate from other American black bear populations. We do not have additional information in our files addressing the genetics of other American black bears found in Nevada or California. Therefore, substantial information was not provided in the petition, and information available in our files does not suggest, that American black bears in Nevada may be markedly separate from other American black bears found outside of Nevada based on genetics.

As indicated above, Breck *et al.* (2008, p. 428) investigated whether food-conditioning behavior was inherited or

learned through parent-offspring social learning. Learning can also occur asocially (independently of others) and socially (observing unrelated individuals) (Breck *et al.* 2008, p. 428). The authors concluded that three of their four analyses were similar in that they revealed little evidence that food-conditioning behavior was inherited or learned from the parent-offspring relationship (Breck *et al.* 2008, p. 431). While their fourth analysis indicated some statistical difference for the food-conditioned category compared with the other category pairings (nonfood-conditioned compared to nonfood-conditioned; nonfood-conditioned compared to food conditioned) for American black bears at Yosemite National Park, they also concluded that it did not show strong evidence that food-conditioning behavior was inherited or learned from the parent-offspring relationship (Breck *et al.* 2008, p. 432). They concluded that this fourth analysis was statistically significant, but not biologically meaningful, and the result may be attributable to the large sample size of the study (Breck *et al.* 2008, p. 432).

While food-conditioning behavior could be learned from the parent-offspring relationship or through inheritance, these are not the primary means of learning (Breck *et al.* 2008, p. 433). Breck *et al.* (2008, p. 433) state that, because American black bears are adaptable, it is unlikely that a behavior that can be applied under various environmental conditions and over a large geographic area would result in a genetic lineage that is distinct. Breck *et al.* (2008, pp. 430–431) do not support the petition's assertion that the American black bear population in Nevada may be markedly separate from other populations of American black bears outside of the State due to behavioral differences. The petition does not provide substantial information, nor do we have information in our files, to indicate that American black bears in Nevada may be markedly separate from other American black bears outside of Nevada based on behavioral factors.

There is further lack of support for the claim that American black bear populations between Nevada and California are markedly separate because the American black bear population in Nevada is not physically separated from American black bears in California, nor is the habitat used by American black bears in Nevada unique. While Lake Tahoe (and its Basin) is divided by the State boundary between California and Nevada, it is not a complete physical barrier to American black bear movement between the two States; American black bears are found throughout the Sierra Nevada (Zielinski *et al.* 2005, pp. 1396, 1400) and can move between the two States in the Basin as well as to the north and south of the Basin. There is no physical barrier or terrain along the remaining State boundary north or south of Lake Tahoe (and its Basin) within the range of the subspecies that prevents cross-border movement. Beckmann (2002, pp. 39, 42–43) provides home range maps of collared Nevada and California American black bears that demonstrate individuals' use of habitat in both States on both the north and south ends of Lake Tahoe. Also, the American black bear population in Nevada is not isolated by individual mountain ranges within the State. Beckmann (2002, pp. 42–43) demonstrated overlap of American black bear home ranges in central Nevada. This wide-ranging species can travel long distances and is capable of, and has been documented, crossing desert valleys between mountain ranges in Nevada (Beckmann and Lackey 2004, p. 271).

The petition asserts that American black bear habitat in western Nevada (forested mountain ranges isolated by valleys) is characteristic of the unique Great Basin ecosystem (Big Wildlife and NoBearHuntNV.org 2011, p. 13). American black bears are adaptable and are found in many habitat types across North America (Bowers *et al.* 2004, p. 142; Big Wildlife and NoBearHuntNV.org 2011, p. 7). The use of forested mountain habitats by American black bears in Nevada is not unique (Zielinski *et al.* 2005, p. 1385). Forested mountain ranges are not unique to Nevada, nor do they terminate discretely at the State border. The Great Basin covers a large geographic area in the western United States and includes portions of the States of Oregon, California, Nevada, Utah, and Idaho (70 FR 73190, December 9, 2005). This geographic area extends well beyond the boundaries of Nevada. The Great Basin does not lie wholly within the State of Nevada nor does it correspond to Nevada State boundaries. The petition does not provide substantial information, nor is there information available in our files, to suggest that the American black bear in Nevada may be markedly separate from other populations of American black bears outside of Nevada due to physical or geographic reasons.

The petition does not present information to suggest there may be a markedly separate population of American black bears in Nevada due to physiological reasons. Additionally, we do not have information in our files to indicate that the American black bear in Nevada may be markedly separate from other American black bears outside of this area due to physiological reasons.

Substantial information is not presented in the petition, nor is it available in our files, to suggest there may be a markedly separate population of American black bears in Nevada due to physical, physiological, ecological, or behavioral differences as compared to American black bears located in the Sierra Nevada of California and elsewhere. Therefore, we determine, based on the information provided in the petition and in our files that the American black bear population in Nevada may not be markedly separate from other black bear populations found outside of the State. Therefore, we conclude that the black bear population in Nevada does not meet the discreteness criterion of the 1996 DPS policy.

There are no international governmental boundaries associated with this subspecies that are significant. The American black bear population found in Nevada lies wholly within the United States. Because this element is not relevant in this case for a finding of discreteness, it was not considered in reaching this determination.

Significance

If a population segment is considered discrete under one or more of the conditions described in our DPS policy, its biological and ecological significance will be considered in light of Congressional guidance that the authority to list DPSs be used ''sparingly'' while encouraging the conservation of genetic diversity. In making this determination, we consider available scientific evidence of the discrete population segment's importance to the taxon to which it belongs. Since precise circumstances are likely to vary considerably from case to case, the DPS policy does not describe all the classes of information that might be used in determining the biological and ecological importance of a discrete population. However, the DPS policy does provide four possible reasons why a discrete population may be significant. As specified in the DPS policy (61 FR 4722), this consideration of the population segment's significance may include, but is not limited to, the following:

(1) Persistence of the discrete population segment in an ecological setting unusual or unique to the taxon;

(2) Evidence that loss of the discrete population segment would result in a significant gap in the range of a taxon;

(3) Evidence that the discrete population segment represents the only surviving natural occurrence of a taxon that may be more abundant elsewhere as an introduced population outside its historical range; or

(4) Evidence that the discrete population segment differs markedly from other populations of the species in its genetic characteristics.

A population segment needs to satisfy only one of these criteria to be considered significant. Furthermore, the list of criteria is not exhaustive; other criteria may be used as appropriate.

Because we must find a population to be both discrete and significant to qualify as a DPS, and we did not find the population to be discrete, we will not address the potential significance of the American black bear in Nevada to the remainder of the taxon, nor will we evaluate the population's conservation status.

Conclusion of Distinct Population Segment Review

Based on the information provided in the petition and in our files, we find that the petition does not provide substantial information to indicate that the American black bear population in Nevada meets the discreteness criterion of the DPS policy. Since both discreteness and significance are required to satisfy the DPS policy, we have determined that the American black bear population in Nevada does not qualify as a DPS under our policy and, therefore, is not a listable entity under the Act. As a result, no further analysis under the DPS policy is necessary.

Finding

We reviewed the information presented in the petition, and we evaluated that information in relation to information readily available in our files. On the basis of our review, we find that neither the petition, nor information readily available in our files, suggests that the American black bear population in Nevada meets the criteria for being discrete under our DPS policy. Available information from the petition and our files does not suggest there may be a markedly separate population of American black bears in Nevada compared with other populations due to physical, physiological, ecological, or behavioral differences. The American black bear in Nevada is not found to be markedly separate from other American black bear populations because it is not physically separate from other adjacent populations due to various kinds of barriers, it is not genetically different and does not demonstrate physiological or behavioral differences, nor does it occur in ecological settings in Nevada that are dissimilar from other areas occupied by the American black bear. Because the petition does not present substantial information that the American black bear in Nevada may be a DPS, we did not evaluate whether the information contained in the petition regarding the conservation status was substantial. We conclude that the American black bear in Nevada does not satisfy the elements of being a DPS under our 1996 policy and, therefore, is not a listable entity under section 3(16) of the Act.

We encourage interested parties to continue to gather data that will assist with the conservation of the American black bear in Nevada. If you wish to provide information regarding the American black bear in Nevada, you may submit your information or materials to the State Supervisor, Nevada Fish and Wildlife Office (see **ADDRESSES**), at any time.

References Cited

A complete list of references cited is available on the Internet at *http://www.regulations.gov* and upon request from the Nevada Fish and Wildlife Office (see **FOR FURTHER INFORMATION CONTACT**).

Author

The primary authors of this notice are the staff of the Nevada Fish and Wildlife Office (see **ADDRESSES**).

Authority

The authority for this action is the Endangered Species Act of 1973, as amended (16 U.S.C. 1531 *et seq.*).

Dated: June 19, 2012.

Daniel M. Ashe,

Director, U.S. Fish and Wildlife Service.

[FR Doc. 2012–16335 Filed 7–3–12; 8:45 am]

BILLING CODE 4310–55–P

Notices

Federal Register

Vol. 77, No. 129

Thursday, July 5, 2012

This section of the FEDERAL REGISTER contains documents other than rules or proposed rules that are applicable to the public. Notices of hearings and investigations, committee meetings, agency decisions and rulings, delegations of authority, filing of petitions and applications and agency statements of organization and functions are examples of documents appearing in this section.

DEPARTMENT OF AGRICULTURE

Forest Service

Wallowa-Whitman National Forest, Baker County, OR; North Fork Burnt River Mining

AGENCY: Forest Service, USDA.

ACTION: Correction—Notice of intent to prepare a supplement to a final environmental impact statement.

Corrected Information: The Responsible Official has been changed to the Whitman District Ranger. This 2012 North Fork Burnt River Mining Record of Decision will replace and supercede the 2004 North Fork Burnt River Mining Record of Decision only where necessary to address the inadequacies identified by the court of Oregon (*Papak 2006*). The 2012 ROD will also document the decision and rationale for incorporating updated or new information included in the Supplement. The Record of Decision for this analysis is expected to be signed later this summer.

FOR FURTHER INFORMATION CONTACT: Sophia Millar, Interdisciplinary Team Leader, Wallowa-Whitman National Forest, Wallowa Mountains Office, PO Box 905, Joseph, OR 97846, Phone: (541) 426–5540.

Dated: June 28, 2012.

Monica J. Schwalbach,

Forest Supervisor.

[FR Doc. 2012–16467 Filed 7–3–12; 8:45 am]

BILLING CODE 3410–11–P

DEPARTMENT OF AGRICULTURE

Rural Business-Cooperative Service

Applications for Licensing as a Non-Leveraged Rural Business Investment Company Under the Rural Business Investment Program

AGENCY: Rural Business-Cooperative Service, USDA.

ACTION: Notice.

SUMMARY: This Notice announces the acceptance of applications from newly-formed Rural Business Investment Companies (RBICs) who are interested in being licensed as non-leveraged RBICs under the Agency's Rural Business Investment Program (RBIP). The Agency intends to issue no more than one non-leveraged license in Fiscal Year 2012.

DATES: The Agency will begin accepting applications on August 6, 2012.

ADDRESSES: *Address for application submission:* Completed applications must be sent to Specialty Programs Division, U.S. Department of Agriculture, Mail Stop 3225, 1400 Independence Avenue SW., Washington, DC 20250–3225.

Address for requesting information: Application materials and other information may be requested by writing to Director, Specialty Programs Division, U.S. Department of Agriculture, Mail Stop 3225, 1400 Independence Avenue SW., Washington, DC 20250–3225.

FOR FURTHER INFORMATION CONTACT: Detailed information on the RBIP, including application materials and instructions, can be found on the Agency's Web site at *http://www.rurdev.usda.gov/BCP_RBIP.html.* You also may request information from the Agency by contacting Mark Brodziski, Director, Specialty Programs Division, U.S. Department of Agriculture, Mail Stop 3225, 1400 Independence Avenue SW., Washington, DC 20250–3225, at (202) 720–1400.

SUPPLEMENTARY INFORMATION:

Paperwork Reduction Act

The Paperwork Reduction Act of 1995 defines ''collection of information'' as a requirement for ''answers to * * * identical reporting or recordkeeping requirements imposed on ten or more persons'' (44 U.S.C. 3502(3)(A)). The collection requirements associated with this Notice, is expected to receive less than ten respondents and therefore the Act does not apply.

Overview Information

Federal Agency Name. Rural Business-Cooperative Service.

Opportunity Title. Rural Business Investment Program for Non-leveraged RBICs.

Announcement Type. Initial announcement.

Catalog of Federal Domestic Assistance (CFDA) Number. The CFDA number for the program impacted by this action is 10.860, Rural Business Investment Program.

Dates. The Agency will begin accepting applications for non-leveraged status on August 6, 2012.

Availability of Notice. This Notice is available on the USDA Rural Development Web site at: *http://www.rurdev.usda.gov/BCP_RBIP.html.*

I. Opportunity Description

A. *Purpose.* The purpose of Subtitle H of the Consolidated Farm and Rural Development Act, as amended (7 U.S.C. 2009cc *et seq.*) (the ''Act'') is to promote economic development and the creation of wealth and job opportunities in rural areas and among individuals living in those areas through venture capital investments by for-profit RBICs.

The purpose of this Notice is to license qualified RBICs as non-leveraged RBICs under the RBIP. Previously, the Agency only licensed qualified RBICs as leveraged RBICs.

B. *Program authority.* Subtitle H of the Consolidated Farm and Rural Development Act, as amended (7 U.S.C. 2009cc *et seq.*) establishes the Rural Business Investment Program.

C. *Definition of Terms.* The terms defined in 7 CFR part 4290 are applicable to this Notice.

II. Licensing Information

A. *Number of Licenses.* The Agency intends to issue no more than one non-leveraged license in Fiscal Year 2012. In Fiscal Year 2013, subject to sufficient administrative resources, the Agency intends to issue no more than three non-leveraged licenses.

B. *Type of License.* Non-leveraged.

III. Eligibility Information

Applicants and their applications are subject to the provisions of this Notice

and to the provisions of 7 CFR part 4290. In order to be eligible for non-leveraged status under this Notice, the applicant must demonstrate that one or more Farm Credit System (FCS) institution(s) will invest in the RBIC and, individually or collectively, hold 10 percent or more of the applicant's total capital.

IV. Application and Submission Information

A. *Where to Obtain Applications.* Applicants may obtain applications and other applicable application material from the Agency's Specialty Programs Division, as provided in the **ADDRESSES** section of this Notice. Because applications will be selected on a first-come, first-served basis, the Agency recommends that potential applicants who plan to request application materials via mail request such materials as soon as possible.

Application materials may also be obtained via *http://www.rurdev.usda.gov/BCP_RBIP.html* or by contacting the Agency at the address and phone number provided in the **ADDRESSES** section of this Notice.

B. *Content and Form of Submission.* Applicants must submit applications in order to be considered. Applications must be submitted in accordance with the application instructions contained in this Notice and in 7 CFR 4290, including a requirement that applications be submitted in hard copy form. Applications sent electronically or by facsimile will not be accepted.

Contents of the initial application include RD Form 4290–1, ''Rural Business Investment Program (RBIP) Application,'' Part I, Management Assessment Questionnaire (MAQ), and RD Form 4290–2, ''Rural Business Investment Program (RBIP) Application,'' Part II, Exhibits (exhibits A, D, E, F, G, K, L, P, V, and Z).

Submit two complete, original hard copy sets of the RD Form 4290–1 and RD Form 4290–2 (excluding Exhibit P, which is required in electronic form only). Place each of the two original sets in a large 3-ring binder. Label the binders with the RBIC's name. Submit one complete and unbound one-sided hard copy of the MAQ and Exhibits suitable for photocopying (i.e., no hole punches, staples, paper clips, tabs or binders).

Applicants must enclose in their submission a nonrefundable licensing fee of $500 in the form of a check payable to USDA.

C. *When to submit.* Applications will be accepted on a continuous basis starting August 6, 2012.

D. *Where to Submit.* The applicant must submit an original of the application to the Agency's Specialty Programs Division as specified in the **ADDRESSES** section of this Notice.

E. *How to Submit.* Applicants may submit their applications via mail service.

V. Program Provisions

This section of the Notice identifies the procedures the Agency will use to process and select applicants for licensing as a non-leveraged RBIC. More information about the RBIP is available in the regulation at 7 CFR part 4290.

The Agency will select applicants for licensing as a non-leveraged RBIC on a first-come, first-served basis. For Fiscal Year 2012, the Agency intends to award no more than one non-leveraged license.

The Agency will review each application it receives in response to this Notice with regard to eligibility and completeness. If the application is incomplete, the Agency will notify the applicant of the missing information. The applicant must then provide the missing information in order for the Agency to further review the application.

As noted above, the Agency will select applicants on a first-come, first-served basis. The Agency will determine the order of applications based on the date the Agency receives a complete application. For example, if an application is received on July 1, but is incomplete, and the applicant supplies the Agency with the missing information on August 1, then that application will be considered for selection on the basis of the August 1 date—the date on which the Agency received a complete application. Therefore, the Agency encourages applicants to ensure their applications are complete prior to submitting them.

Only those applications that are eligible will be processed further for determining whether the applicant will be licensed as a non-leveraged RBIC. The Agency anticipates being able to further process only one application in FY 2012. The Agency will not begin processing additional complete and eligible applications until the evaluation of the first application has been completed. Thus, most of the complete and eligible applications received in response to this Notice will be processed in FY 2013 and beyond in the order received.

For each application that receives further processing, the Agency will focus its assessment of the application on the consistency of the newly-formed RBIC's business plan with the goals of the RBIC program and on the applicant's management team's qualifications. Following this assessment, if the initial recommendation is favorable, the Agency, or its designee, will interview the applicant's management team.

Based on the assessment and interview, a recommendation will be made as to whether or not to select the applicant for non-leveraged status. If the recommendation is favorable, the Agency will send to the applicant a Letter of Conditions (also known as a ''Green Light'' letter) and the applicant will be invited to submit an updated RD Form 4290–1, Part I, Management Assessment Questionnaire, and RD Form 4290–2, Part II, Exhibits. Upon receipt of the Letter of Conditions, the applicant has 24 months to raise their private equity capital. Once a selected applicant has achieved full compliance with the regulations governing licensing as an RBIC, the Agency will issue the non—leveraged license to the RBIC.

VI. Administrative Information Applicable to This Notice

A. Notifications

(1) *Eligibility.* If an applicant is determined by the Agency to be eligible for participation, the Agency will notify the applicant in writing. If an applicant is determined by the Agency to be ineligible, the Agency will notify the applicant, in writing, as to the reason(s) the applicant was rejected. Such applicant will have review and appeal rights as specified in this Notice.

(2) *License.* Each applicant will be notified of the Agency's decision on their application.

B. Administrative and National Policy Requirements

(1) *Review or appeal rights.* A person may seek a review of an adverse Agency decision under this Notice or appeal to the National Appeals Division in accordance with 7 CFR part 11.

(2) *Notification of unfavorable decisions.* If at any time prior to license approval it is decided that favorable action will not be taken, the Agency will notify the applicant in writing of the decision and of the reasons why issuing a non-leveraged license was not favorably considered. The notification will inform the applicant of its rights to an informal review, mediation, and appeal of the decision in accordance with 7 CFR part 11.

VII. Agency Contacts

For further information about this Notice or for assistance with the program requirements, please contact the Specialty Programs Division, STOP 3225, Room 6867, 1400 Independence

Avenue SW., Washington, DC 20250–3225. Telephone: (202) 720–1400.

VIII. Nondiscrimination Statement

USDA prohibits discrimination in all its programs and activities on the basis of race, color, national origin, age, disability, and where applicable, sex, marital status, familial status, parental status, religion, sexual orientation, genetic information, political beliefs, reprisal, or because all or part of an individual's income is derived from any public assistance program. (Not all prohibited bases apply to all programs.) Persons with disabilities who require alternative means for communication of program information (Braille, large print, audiotape, etc.) should contact USDA's TARGET Center at (202) 720–2600 (voice and TDD). To file a complaint of discrimination, write to USDA, Director, Office of Civil Rights, 1400 Independence Avenue SW, Washington, DC 20250–9410, or call (800) 795–3272 (voice), or (202) 720–6382 (TDD). ''USDA is an equal opportunity provider, employer, and lender.''

Dated: June 26, 2012.

John C. Padalino,

Acting Administrator, Rural Business-Cooperative Service.

[FR Doc. 2012–16394 Filed 7–3–12; 8:45 am]

BILLING CODE P

ARCHITECTURAL AND TRANSPORTATION BARRIERS COMPLIANCE BOARD

Performance Review Board Membership

AGENCY: Architectural and Transportation Barriers Compliance Board.

ACTION: Notice.

SUMMARY: Notice is given of the appointment of members to a performance review board for the Architectural and Transportation Barriers Compliance Board (Access Board).

FOR FURTHER INFORMATION CONTACT: David M. Capozzi, Executive Director, Access Board, 1331 F Street NW., Suite 1000, Washington, DC 20004–1111. Telephone (202) 272–0010.

SUPPLEMENTARY INFORMATION: Section 4314(c) of Title 5, U.S.C., requires each agency to establish, in accordance with regulations, one or more Senior Executive Service (SES) performance review boards. The function of the boards is to review and evaluate the initial appraisal of senior executives' performance and make recommendations to the appointing authority relative to the performance of these executives. Because of its small size, the Access Board has appointed SES career members from other federal agencies to serve on its performance review board. The members of the performance review board for the Access Board are:

- Craig Luigart, Chief Information Officer, Veterans Health Administration, Department of Veterans Affairs;
- Georgia Coffey, Deputy Assistant Secretary for Diversity and Inclusion, Department of Veterans Affairs;
- Henry Claypool, Principal Deputy Administrator, Administration for Community Living, Department of Health and Human Services.

David M. Capozzi,

Executive Director.

[FR Doc. 2012–16331 Filed 7–3–12; 8:45 am]

BILLING CODE 8150–01–P

DEPARTMENT OF COMMERCE

Submission for OMB Review; Comment Request

The Department of Commerce will submit to the Office of Management and Budget (OMB) for clearance the following proposal for collection of information under the provisions of the Paperwork Reduction Act (44 U.S.C. chapter 35).

Agency: U.S. Census Bureau.

Title: Special Census Program.

OMB Control Number: 0607–0368.

Form Number(s): SC–1, SC–1(SUPP), SC–1(PHONE/WYC), SC–2, SC–3(RI), SC–116, SC–117, SC–351, SC–920, SC–921 (HU, GQ, TU), SC–1(F), SC–31, SC–31(S), SC–26, SC–901, SC–3309.

Type of Request: Reinstatement with change, of an expired collection.

Burden Hours: 53,527.

Number of Respondents: 248,430.

Average Hours per Response: 13 minutes.

Needs and Uses: The Special Census Program is a reimbursable service offered and performed by the U.S. Census Bureau for the government of any state, county, city, or other political subdivision within a state. This includes the District of Columbia, the government of any possession or area over which the U.S. exercises jurisdiction, control, or sovereignty, and other governmental units that require current population data between decennial censuses.

Many states use Special Census population statistics to determine the need for a change in the distribution of funds to local jurisdictions. The local jurisdictions may also use the data to plan new schools, transportation systems, housing programs, or water treatment facilities.

The Census Bureau will use the following forms to conduct the Special Census operations:

SC–1, Special Census Enumerator Questionnaire—This interview form will be used to collect special census data at regular housing units (HU), and eligible units in Transitory Locations (TL) such as RV parks, marinas, campgrounds, hotels or motels.

SC–1 (SUPP), Special Census Enumeration Continuation Questionnaire—This interview form will be used to collect special census data at a regular HU or eligible units in a TL, when there are more than five members in a household.

SC–1 (Phone/WYC), Special Census Phone/WYC Questionnaire—This interview form will be used to collect special census data when a respondent calls the local Special Census Office.

SC–2, Special Census Individual Census Report—This interview form will be used to collect special census data at group quarters (GQ) such as hospitals, prisons, boarding and rooming houses, college dormitories, military facilities, and convents.

SC–3 (RI), Special Census Enumeration Reinterview Form—This interview form is a quality assurance form used by enumerators to conduct an independent interview at a sample of HUs. Special Census office staff will compare the data collected on this form with the original interview to make sure the original enumerator followed procedures.

SC–116, Special Census Group Quarters (GQ) Enumeration Control Sheet—This form will be used by Special Census enumerators to list residents/clients at GQs.

SC–117, Special Census Transitory Locations (TL) Enumeration Record—This form will be used by Special Census office staff to collect contact information for TLs, to schedule interviews for the TLs, to determine the type of TL, and to estimate the number of interviews to be conducted at the TL.

SC–351, Special Census Group Quarters (GQ) Initial Contact Checklist—This checklist will be used by enumerators to collect GQ contact information and to determine the type of GQ.

SC–920, Special Census Address Listing Page—This form will list existing addresses from the Census Bureau's Master Address File (MAF). Special Census enumerators will update

these addresses, if needed, at the time of enumeration.

SC–901, Special Census Address Listing Notes Page—This form will be used by the enumerator to write notes about any extenuating circumstances regarding the listing of an address found on the SC–920, Address Listing Page. The Enumerator will use the line number from the Address Listing page and note any issues encountered that might need further explanation regarding the unit/address.

SC–921(HU), Special Census Housing Unit Add Page—This form will be used by enumerators to add housing units (HUs) that are observed to exist on the ground, that are not contained on the address listing page.

SC–921(GQ), Special Census Group Quarter Add Page—This form will be used by enumerators to add Group Quarters (GQs) that are observed to exist on the ground, that are not contained on the address listing page.

SC–921(TU), Special Census Transitory Unit Add Page—This form will be used by enumerators to add Transitory Units (e.g., hotels, motels, RV parks, marinas) that are observed to exist on the ground, that are not contained on the address listing page.

SC–1(F), Special Census Information Sheet—This sheet contains the Confidentiality Notice and the Flash Card information for use at Housing Units. The Confidentiality Notice is required by the Privacy Act of 1974. The Flash Card portion of the Information Sheet shows the set of flashcards that will be shown to respondents as an aid in answering certain questions. Special Census field staffs are required by law to give an Information Sheet to each person from whom they request census-related information.

SC–31/SC–31(S), Special Census Group Quarters Information Sheet—This sheet contains the Confidentiality Notice and the Flashcard information for use at Group Quarters. The Confidentiality Notice is required by the Privacy Act of 1974. The Flash-card portion of the Information Sheet shows the set of flashcards that will be shown to respondents as an aid in answering certain questions. Special Census field staffs are required by law to give an Information Sheet to each person from whom they request special census related information.

SC–26, Special Census Notice of Visit Form—This form is the form that enumerators will leave at addresses where they are not able to make contact. The notice indicates that a special census enumerator was there and will return to conduct an interview. It also provides a telephone number that the respondent can use to contact the enumerator and/or the Special Census Office.

SC–3309, Language Identification Flashcard—This form will be used by enumerators to identify the language spoken by a respondent when a language barrier is encountered.

The Census Bureau will establish a reimbursable agreement with a variety of potential special census customers that are unknown at this time. The Special Census Program will include a library of standard forms that will be used for the Special Censuses we anticipate conducting throughout this decade. While no additional documentation will be provided to OMB in advance of conducting any Special Census which utilizes the library of standard forms, any deviation from the standard forms, such as an additional question requested by a specific governmental unit, will be forwarded to OMB for approval. In addition, the Special Census program will provide OMB an annual report summarizing the activity for the year.

Local jurisdictions determine the need for and uses of their special census data. Some governmental units request a special census for proper infrastructure planning and others make a request because they must have the updated data to qualify for some sources of funding. Local governmental units use special census data to apply for available funds from both the state and Federal governments. Many states distribute these funds based on Census Bureau population statistics. This fact, along with local population shifts or annexations of territory, prompts local officials to request special censuses. In addition, special census data are used by the local jurisdictions to plan new schools, transportation systems, housing programs, water treatment facilities, etc.

The Census Bureau also uses special census data as part of its local population estimates calculation and to update the Census Bureau's Master Address File (MAF) and Topographically Integrated Geographic Encoding and Referencing (TIGER) System.

Affected Public: Individuals or households.

Frequency: One time.

Respondent's Obligation: Voluntary.

Legal Authority: Title 13 U.S.C., Section 196.

OMB Desk Officer: Brian Harris-Kojetin, (202) 395–7314.

Copies of the above information collection proposal can be obtained by calling or writing Jennifer Jessup, Departmental Paperwork Clearance Officer, (202) 482–0336, Department of Commerce, Room 6616, 14th and Constitution Avenue NW., Washington, DC 20230 (or via the Internet at *jjessup@doc.gov*).

Written comments and recommendations for the proposed information collection should be sent within 30 days of publication of this notice to Brian Harris-Kojetin, OMB Desk Officer either by fax (202–395–7245) or email (*bharrisk@omb.eop.gov*).

Dated: June 29, 2012.

Glenna Mickelson,

Management Analyst, Office of the Chief Information Officer.

[FR Doc. 2012–16387 Filed 7–3–12; 8:45 am]

BILLING CODE 3510–07–P

DEPARTMENT OF COMMERCE

Census Bureau

Proposed Information Collection; Comment Request; 2013 Current Population Survey Annual Social and Economic Supplement Content Test

AGENCY: U.S. Census Bureau, Commerce.

ACTION: Notice.

SUMMARY: The Department of Commerce, as part of its continuing effort to reduce paperwork and respondent burden, invites the general public and other Federal agencies to take this opportunity to comment on proposed and/or continuing information collections, as required by the Paperwork Reduction Act of 1995, Public Law 104–13 (44 U.S.C. 3506(c)(2)(A)).

DATES: To ensure consideration, written comments must be submitted on or before September 4, 2012.

ADDRESSES: Direct all written comments to Jennifer Jessup, Departmental Paperwork Clearance Officer, Department of Commerce, Room 6616, 14th and Constitution Avenue NW., Washington, DC 20230 (or via the Internet at *jjessup@doc.gov*).

FOR FURTHER INFORMATION CONTACT: Requests for additional information or copies of the information collection instrument(s) and instructions should be directed to Brian O'Hara, Social and Economic Housing Statistics Division, U.S. Census Bureau, 301–763–3196 (or via the Internet at *brian.j.ohara@census.gov*).

SUPPLEMENTARY INFORMATION:

I. Abstract

The Current Population Survey (CPS) Annual Social and Economic

Supplement (ASEC) is used to produce official estimates of income and poverty, and it serves as the most widely-cited source of estimates on health insurance and the uninsured. These statistics have far-ranging implications for policy and funding decisions. Alternative sets of questions on income and health insurance have been developed and are now slated for a large-scale field test to evaluate the questions and the estimates they generate.

With regard to income, the CPS ASEC was converted to computer assisted interviewing (CAI) in 1994. This conversion, essentially, took the questions and skip patterns of the paper questionnaire, and put them on a computer screen. Automated data collection methods allow for complicated skips, respondent-specific question wording, and carry-over of data from one interview to the next. The computerized questionnaire also permits the inclusion of several built-in editing features, including automatic checks for internal consistency and unlikely responses, and verification of answers. With these built-in editing features, errors can be caught and corrected during the interview itself. It has been more than 30 years since the last major redesign of the income questions of this questionnaire (1980), and the need to modernize this survey to take advantage of CAI technologies has become more and more apparent.

Regarding health insurance, the CPS ASEC health insurance questions have measurement error due to both the reference period and timing of data collection. Qualitative research has shown that some respondents do not focus on the calendar year reference period, but rather report on their current insurance status. Quantitative studies have shown that those with more recent coverage are more likely to report accurately than those with coverage in the distant past. A new set of integrated questions on both current and past calendar year status should produce more accurate estimates of past year coverage. This is because the current coverage status questions may serve as an anchor to elicit more accurate reports of past year coverage than the standard methodology.

In addition to making improvements to the core set of questions on health insurance, in 2014 the Patient Protection and Affordable Care Act (PPACA) is set to go into effect. One of the main features of the PPACA is the ''Health Insurance Exchange.'' These are joint federal-state partnerships designed to create a marketplace of private health insurance options for individuals and small businesses. While these Exchanges are still in development and states have broad flexibility in designing the programs, it is essential for the federal government to have a viable methodology in place when the PPACA goes into effect to measure Exchange participation, and to measure types of health coverage (in general) in the post-reform era.

Lastly, the point-in-time health insurance questions lend themselves to additional questions concerning whether the current employer offered the respondent health insurance coverage. Although this set of questions is new to the CPS ASEC, it has been in CPS production in the Contingent Worker Supplement (CWS). The CWS was fielded in February of 1995, 1997, 1999, 2001 and 2005.

The overarching purpose of the 2013 CPS ASEC Content Test is to evaluate the following:

- Customization of income questions to fit specific demographic groups
- Ask recipiency and amounts separately
- Use better targeted questions for certain income types that are currently not well reported
- Improve health insurance questions by using a new method of collection
- New content on a new way for people to get income-related subsidies for health insurance coverage
- New content on employer-provided health insurance

II. Method of Collection

The 2013 field test is expected to be conducted using a CATI instrument by Census Bureau interviewers located in three telephone interviewing facilities (in Hagerstown, Maryland; Jeffersonville, Indiana; and Tucson, Arizona).

III. Data

OMB Control Number: None.
Form Number: None.
Type of Review: Regular submission.
Affected Public: Individuals or households.
Estimated Number of Respondents: 15,000 households.
Estimated Time per Response: 40 minutes per household.
Estimated Total Annual Burden Hours: 10,000 hours.
Estimated Total Annual Cost: Except for their time, there is no cost to respondents.
Respondent Obligation: Voluntary.
Legal Authority: Section 182 of Title 13 of the United States Code.

IV. Request for Comments

Comments are invited on: (a) Whether the proposed collection of information is necessary for the proper performance of the functions of the agency, including whether the information shall have practical utility; (b) the accuracy of the agency's estimate of the burden (including hours and cost) of the proposed collection of information; (c) ways to enhance the quality, utility, and clarity of the information to be collected; and (d) ways to minimize the burden of the collection of information on respondents, including through the use of automated collection techniques or other forms of information technology.

Comments submitted in response to this notice will be summarized and/or included in the request for OMB approval of this information collection; they also will become a matter of public record.

Dated: June 29, 2012.

Glenna Mickelson,

Management Analyst, Office of the Chief Information Officer.

[FR Doc. 2012–16389 Filed 7–3–12; 8:45 am]

BILLING CODE 3510–07–P

DEPARTMENT OF COMMERCE

Bureau of Industry and Security

[Docket No. 120620179–2179–01]

Request for Public Comments on Shipping Tolerances for Export Licenses Issued by the Bureau of Industry and Security

AGENCY: Bureau of Industry and Security, Commerce.

ACTION: Notice of inquiry.

SUMMARY: Numerous exporters have expressed interest in establishing an automatic calculation through the Automated Export System (AES) of the shipping tolerance for licenses issued by the Bureau of Industry and Security (BIS) to enhance exporter compliance with the Export Administration Regulations (EAR). In addition, automatic calculation would assist in achieving the goals of the President's Export Control Reform (ECR) initiative to harmonize the control lists of the Departments of Commerce and State, and with the transfer of militarily less significant defense articles from the United States Munitions List (USML) to the Commerce Control List (CCL), by making the transfer smoother for exporters since automatic calculation of shipping tolerances is already in place for the primary licenses issued by the Department of State (DSP–5 licenses). BIS seeks public comment to help it ascertain if changes should be made to its shipping tolerance regulations in

order to make automatic calculation in AES feasible. BIS is particularly interested in whether a flat percentage should be applied to the dollar value of all controlled items to calculate shipping tolerance or whether another method of calculation should be employed.

DATES: Comments must be received no later than August 20, 2012.

ADDRESSES: Comments may be submitted via email to *teresa.telesco@bis.doc.gov.* Please refer to ''Shipping Tolerance of Export Licenses'' in the subject line. Comments may also be sent to Shipping Tolerance Study, Office of Technology Evaluation, Room 1093, U.S Department of Commerce, 14th Street and Pennsylvania Avenue NW., Washington, DC 20230.

FOR FURTHER INFORMATION CONTACT: Teresa Telesco, Office of Technology Evaluation, Bureau of Industry and Security, telephone: 202–482–4959; fax: 202–482–5361; email: *teresa.telesco@bis.doc.gov.*

SUPPLEMENTARY INFORMATION:

Background

BIS, among its other activities, issues licenses for the export of items that are subject to the Export Administration Regulations (EAR). Under some circumstances defined in the EAR, exporters are allowed to export more than the quantity or dollar value shown on an export license. This additional amount is called a shipping tolerance. Currently, the allowable shipping tolerance is calculated based on the ''unit'' specified in the Export Control Classification Number (ECCN); the three basic ''units'' are ''dollar value,'' ''number,'' or ''area, weight or measure'' (see § 750.11). Depending on the applicable ''unit,'' BIS allows either no shipping tolerance on dollar value, or up to 25 percent shipping tolerance on dollar value. The Department of State, which issues licenses for commodities identified on the USML, measures shipping tolerances based on dollar value. The Department of State applies a flat 10 percent shipping tolerance on dollar value to all defense articles.

The President's Export Control Reform (ECR) initiative aims to harmonize, to the maximum extent possible, the control lists of the United States Munitions List (USML) and Commerce Control List (CCL). With the anticipated transfer of items determined to no longer warrant control under the USML to the CCL, which are largely generic parts and components, harmonization of the two agencies' shipping tolerance regulations and the ability to automatically calculate available shipping tolerance in the Automated Export System (AES) may be beneficial, because they could make the transfer easier and less confusing for exporters.

BIS is looking into the feasibility of adding to the Automated Export System (AES) a feature that automatically calculates the shipping tolerance of the dollar value on an export license, communicates the dollar value remaining on the license back to the AES filer, and notifies the AES filer when the license has been fully utilized. This feature is also known as electronic decrementation of a license, and is already in place on AES for the primary licenses issued by the Department of State (DSP–5 licenses). This feature would enhance compliance with licenses and increase transparency of export licensing by providing precise and timely information to exporters on what they are allowed to export under the license in the future. In addition, electronic decrementation would assist with the ECR harmonization goal, as well as the anticipated control of some munitions items under the CCL, by providing exporters of CCL items with the same functionality in AES already available to exporters of USML items.

BIS is seeking information that would help it determine:

- If the current EAR shipping tolerance rules should be maintained or if changes should be made that facilitate automatic calculation;
- If the EAR shipping tolerance rules were changed, (i) should BIS continue to exclude certain ECCNs from having an allowable shipping tolerance, (ii) should the dollar value-based shipping tolerance be set at 10 percent to match the Department of State rules; and
- Whether an automatic calculation of the dollar value-based shipping tolerance in AES (electronic decremention) would assist exporters in maintaining compliance with the allowable shipping dollar value of the license.

The following kinds of information would be useful to BIS's assessment:

- Detailed information on your company's experiences with both the Department of State's and BIS's shipping tolerance regulations;
- Detailed information on how dollar value-based shipping tolerances are beneficial and practical, or detrimental and burdensome to your company or organization;
- Detailed information on your company's experience with automatic calculation of a dollar value-based shipping tolerance (decrementation) against State Department licenses in AES;
- If you believe that BIS's dollar value-based shipping tolerances should be changed, detailed information on how the tolerances should be changed; and
- Detailed information on what benefits, if any, industry would receive through electronic decrementation of a dollar value-based shipping tolerance in AES.

How To Comment

All comments must be in writing and submitted to one of the addresses indicated above. Comments must be received by BIS no later than August 20, 2012. All comments (including any personal identifiable information) will be available for public inspection and copying. Those wishing to comment anonymously may do so by submitting their comment via regulations.gov and leaving the fields for identifying information blank.

Dated: June 27, 2012.

Kevin J. Wolf,

Assistant Secretary for Export Administration.

[FR Doc. 2012–16401 Filed 7–3–12; 8:45 am]

BILLING CODE 3510–JT–P

DEPARTMENT OF COMMERCE

International Trade Administration

[A–570–868]

Folding Metal Tables and Chairs From the People's Republic of China: Final Results of Antidumping Duty Administrative Review

AGENCY: Import Administration, International Trade Administration, Department of Commerce.

SUMMARY: The Department of Commerce (''Department'') published its *Preliminary Results* of administrative review of the antidumping duty order on folding metal tables and chairs from the People's Republic of China (''PRC'') on March 7, 2012.[1] The period of review (''POR'') is June 1, 2010, through May 31, 2011. We invited interested parties to comment on our *Preliminary Results.* Based on our analysis of the comments received, we have made changes to our margin calculations. Therefore, the final results differ from the preliminary results. The final dumping margin for

[1] *See Folding Metal Tables and Chairs From the People's Republic of China: Preliminary Results of Antidumping Duty Administrative Review,* 77 FR 13539 (March 7, 2012) (''*Preliminary Results*'').

this review is listed in the ''Final Results of Review'' section below.

DATES: *Effective Date:* July 5, 2012.

FOR FURTHER INFORMATION CONTACT: Lilit Astvatsatrian or Charles Riggle, AD/CVD Operations, Office 4, Import Administration, International Trade Administration, U.S. Department of Commerce, 14th Street and Constitution Avenue NW., Washington, DC 20230; telephone: (202) 482–6412 or (202) 482–0650, respectively.

Background

On March 7, 2012, the Department published its *Preliminary Results.* On April 10, 2012, Feili Group (Fujian) Co., Ltd. and Feili Furniture Development Limited Quanzhou City (''Feili''), a mandatory respondent in the administrative review, Cosco Home and Office Products (''Cosco'') and Target Corporation (''Target''), importer interested parties, provided surrogate value information. On April 17, 2012,[2] Feili, Cosco, and Target submitted case briefs for the administrative review. On April 23, 2012, the Department received a rebuttal brief from Feili.

On April 10, 2012, Meco Corporation, a domestic producer of the like product and petitioner in the underlying investigation (''Petitioner''), withdrew its request for administrative review. On April 13, 2012, Feili and Cosco withdrew their requests for administrative review and requested that the Department rescind the ongoing review. On April 16, 2012, Target filed comments supporting the rescission of the review.[3]

We have conducted this administrative review in accordance with section 751 of the Tariff Act of 1930, as amended (''the Act''), 19 CFR 351.241, and 19 CFR 351.213.

Scope of Order

The products covered by the order consist of assembled and unassembled folding tables and folding chairs made primarily or exclusively from steel or other metal, as described below:

(1) Assembled and unassembled folding tables made primarily or exclusively from steel or other metal (folding metal tables). Folding metal tables include square, round, rectangular, and any other shapes with legs affixed with rivets, welds, or any other type of fastener, and which are made most commonly, but not exclusively, with a hardboard top covered with vinyl or fabric. Folding metal tables have legs that mechanically fold independently of one another, and not as a set. The subject merchandise is commonly, but not exclusively, packed singly, in multiple packs of the same item, or in five piece sets consisting of four chairs and one table. Specifically excluded from the scope of the order regarding folding metal tables are the following:

Lawn furniture;

Trays commonly referred to as ''TV trays;''

Side tables;

Child-sized tables;

Portable counter sets consisting of rectangular tables 36″ high and matching stools; and, Banquet tables. A banquet table is a rectangular table with a plastic or laminated wood table top approximately 28″ to 36″ wide by 48″ to 96″ long and with a set of folding legs at each end of the table. One set of legs is composed of two individual legs that are affixed together by one or more cross-braces using welds or fastening hardware. In contrast, folding metal tables have legs that mechanically fold independently of one another, and not as a set.

(2) Assembled and unassembled folding chairs made primarily or exclusively from steel or other metal (folding metal chairs). Folding metal chairs include chairs with one or more cross-braces, regardless of shape or size, affixed to the front and/or rear legs with rivets, welds or any other type of fastener. Folding metal chairs include: those that are made solely of steel or other metal; those that have a back pad, a seat pad, or both a back pad and a seat pad; and those that have seats or backs made of plastic or other materials. The subject merchandise is commonly, but not exclusively, packed singly, in multiple packs of the same item, or in five piece sets consisting of four chairs and one table. Specifically excluded from the scope of the order regarding folding metal chairs are the following:

Folding metal chairs with a wooden back or seat, or both;

Lawn furniture;

Stools;

Chairs with arms; and

Child-sized chairs.

The subject merchandise is currently classifiable under subheadings 9401.71.0010, 9401.71.0011, 9401.71.0030, 9401.71.0031, 9401.79.0045, 9401.79.0046, 9401.79.0050, 9403.20.0018, 9403.20.0015, 9403.20.0030, 9403.60.8040, 9403.70.8015, 9403.70.8020, and 9403.70.8031 of the Harmonized Tariff Schedule of the United States (''HTSUS''). Although the HTSUS subheadings are provided for convenience and customs purposes, the Department's written description of the merchandise is dispositive.

Analysis of Comments Received

All issues raised in the post-preliminary comments by parties in this review are addressed in the memorandum from Gary Taverman, Senior Advisor for Antidumping and Countervailing Duty Operations, to Paul Piquado, Assistant Secretary for Import Administration, ''Issues and Decision Memorandum for the 2010–2011 Administrative Review of Folding Metal Tables and Chairs from the People's Republic of China'' (dated concurrently with this notice) (''Issues and Decision Memorandum''), which is hereby adopted by this notice. A list of the issues that parties raised and to which we responded in the Issues and Decision Memorandum is attached to this notice as an appendix. The Issues and Decision Memorandum is a public document and is on file electronically via Import Administration's Antidumping and Countervailing Duty Centralized Electronic Service System (''IA ACCESS''). Access to IA ACCESS is available in the Central Records Unit (''CRU''), room 7046 of the main Department of Commerce building. In addition, a complete version of the Issues and Decision Memorandum can be accessed directly on the Internet at *http://www.trade.gov/ia/.* The signed Issues and Decision Memorandum and the electronic versions of the Issues and Decision Memorandum are identical in content.

Changes Since the Preliminary Results

Based on our analysis of comments received, we have made changes in the margin calculations for Feili.

- We included contemporaneous financial statements of two additional Thai producers of comparable merchandise, Silpfah Thai Industrial Limited Partnership and Index Interfurn Co., Ltd., to derive the average surrogate financial ratios.[4]
- We applied a market-economy purchase price to Feili's factors of production of rivets and revised the value for washers.[5]

[2] The Department postponed the briefing schedule and submission of surrogate values on March 15, 2012.

[3] We recognize that Petitioner's original review request, dated June 28, 2011, and the subsequent withdrawal request lacked certification of factual information. However, this lack of certification is of no consequence in continuing the review because we had timely requests from both Feili and Cosco.

[4] *See* Analysis for the Final Results of the 2010–2011 Administrative Review of Folding Metal Tables and Chairs from the People's Republic of China: Feili Group (Fujian) Co., Ltd. and Feili Furniture Development Limited Quanzhou City (''Feili''), dated concurrently with this notice, at Attachment 5.

[5] *See id.,* at Attachment 4.

• We corrected the conversion rate from cubic meters to kilograms in valuing Feili's natural gas.[6]

Final Results of Review

We determine that the dumping margins for the POR are as follows:

Exporter	Weighted-Average margin
Feili Group (Fujian) Co., Ltd., Feili Furniture Development Limited Quanzhou City	0.00

Assessment

The Department will determine, and U.S. Customs and Border Protection (''CBP'') shall assess, antidumping duties on all appropriate entries of subject merchandise in accordance with the final results of this review. For assessment purposes, we calculated exporter/importer- (or customer) specific assessment rates for merchandise subject to this review. Where appropriate, we calculated an *ad valorem* rate for each importer (or customer) by dividing the total dumping margins for reviewed sales to that party by the total entered values associated with those transactions. For duty-assessment rates calculated on this basis, we will direct CBP to assess the resulting *ad valorem* rate against the entered customs values for the subject merchandise. Where appropriate, we calculated a per-unit rate for each importer (or customer) by dividing the total dumping margins for reviewed sales to that party by the total sales quantity associated with those transactions. For duty-assessment rates calculated on this basis, we will direct CBP to assess the resulting per-unit rate against the entered quantity of the subject merchandise. Where an importer- (or customer) specific assessment rate is *de minimis* under 19 CFR 351.106(c) (*i.e.,* less than 0.50 percent), the Department will instruct CBP to assess that importer (or customer's) entries of subject merchandise without regard to antidumping duties. The Department intends to issue appropriate assessment instructions directly to CBP 15 days after publication of the final results of these reviews.

Cash Deposit Requirements

The following cash deposit requirements will be effective upon publication of the final results of this administrative review for all shipments of the subject merchandise from the PRC entered, or withdrawn from warehouse, for consumption on or after the publication date, as provided for by section 751(a)(2)(C) of the Act: (1) For Feili, because the rate is zero, no cash deposit will be required; (2) for previously investigated or reviewed PRC and non-PRC exporters not listed above that have separate rates, the cash deposit rate will continue to be the exporter-specific rate published for the most recent period; (3) for all PRC exporters of subject merchandise which have not been found to be entitled to a separate rate, the cash deposit rate will be the PRC-wide rate established in the final results of this review (*i.e.,* 70.71 percent); and (4) for all non-PRC exporters of subject merchandise which have not received their own rate, the cash deposit rate will be the rate applicable to the PRC exporters that supplied that non-PRC exporter. These deposit requirements, when imposed, shall remain in effect until further notice.

Notification to Interested Parties

This notice serves as a final reminder to importers of their responsibility under 19 CFR 351.402(f)(2) to file a certificate regarding the reimbursement of antidumping duties prior to liquidation of the relevant entries during the review period. Pursuant to 19 CFR 351.402(f)(3), failure to comply with this requirement could result in the Department's presumption that reimbursement of antidumping duties occurred and the subsequent assessment of doubled antidumping duties.

This notice also serves as a reminder to parties subject to administrative protective order (''APO'') of their responsibility concerning the disposition of proprietary information disclosed under APO as explained in the administrative protective order itself. Timely written notification of the return/destruction of APO materials or conversion to judicial protective order is hereby requested. Failure to comply with the regulations and the terms of an APO is a sanctionable violation.

This notice of the final results of these reviews is issued and published in accordance with sections 751(a)(1) and 777(i) of the Act.

Dated: June 27, 2012.

Paul Piquado,

Assistant Secretary for Import Administration.

APPENDIX

List of Comments and Issues in the Issues and Decision Memorandum

Comment 1: Rescission of the Administrative Review
Comment 2: Selection of the Primary Surrogate Country
Comment 3: Surrogate Financial Statements
A. Use of Silpfah's Financial Statements
B. Use of Interfurn's Financial Statements
C. Treatment of Siam Steel's Expenses
Comment 4: Valuation of Feili Market-Economy Inputs
A. Rivets
B. Washers
Comment 5: Labor Cost
Comment 6: Correction of Certain Clerical Errors
A. Natural Gas
B. Feili's Liquidation Instructions

[FR Doc. 2012–16458 Filed 7–3–12; 8:45 am]

BILLING CODE 3510–DS–P

DEPARTMENT OF COMMERCE

International Trade Administration

Application(s) for Duty-Free Entry of Scientific Instruments

Pursuant to Section 6(c) of the Educational, Scientific and Cultural Materials Importation Act of 1966 (Pub. L. 89–651, as amended by Pub. L. 106–36; 80 Stat. 897; 15 CFR part 301), we invite comments on the question of whether instruments of equivalent scientific value, for the purposes for which the instruments shown below are intended to be used, are being manufactured in the United States.

Comments must comply with 15 CFR 301.5(a)(3) and (4) of the regulations and be postmarked on or before July 25, 2012. Address written comments to Statutory Import Programs Staff, Room 3720, U.S. Department of Commerce, Washington, DC 20230. Applications may be examined between 8:30 a.m. and 5 p.m. at the U.S. Department of Commerce in Room 3720.

Docket Number: 12–025. *Applicant:* Medical University of South Carolina,

[6] *See id.,* at Attachment 3.

169 Ashley Ave., Charleston, SC 29403. *Instrument:* Electron Microscope. *Manufacturer:* JEOL, Ltd., Japan. *Intended Use:* The instrument will be used to determine the characteristics and processes involved in tumorigenesis and the progression to metastatic disease, by examining human and animal tissue to ascertain changes in structure due to disease-related phenomenon. The use of electron microscopy provides structural assessments that may be coupled with physiological or other types of information derived from other techniques to better understand the development of disease. *Justification for Duty-Free Entry:* There are no instruments of the same general category manufactured in the United States. *Application accepted by Commissioner of Customs:* June 11, 2012.

Docket Number: 12–027. *Applicant:* University of Wyoming, 1000 E University Ave., Laramie, WY 82071. *Instrument:* Electron Microscope. *Manufacturer:* FEI Company, Czech Republic. *Intended Use:* The instrument will be used to study metals, metal oxides, metal chalcogenides, DNA, quantum dots, and carbon nanomaterials to determine their size, shape, morphology, composition and crystal structure. Properties such as durability, corrosion resistance, crystal growth, and fragmentation will be investigated. *Justification for Duty-Free Entry:* There are no instruments of the same general category manufactured in the United States. *Application accepted by Commissioner of Customs:* June 4, 2012.

Docket Number: 12–028. *Applicant:* Air Force Institute of Technology, 2950 Hobson Way, Wright-Patterson AFB, OH 45433–7765. *Instrument:* Electron Microscope. *Manufacturer:* FEI Company, Czech Republic. *Intended Use:* The instrument will be used to develop aircraft and components with increased reliability, performance, reduction of cost, and improved safety, using technology such as thermal shields, conductive wires, light-weight structural materials and nano-devices. Experiments will involve visual characterization of damaged components, experimental components, and reliability investigations on the nanometer scale, to identify porosity, fracture surface features, fiber damage, crack propagation, as well as the verification of properly designed nano-devices and related nanomaterials. *Justification for Duty-Free Entry:* There are no instruments of the same general category manufactured in the United States. *Application accepted by Commissioner of Customs:* June 11, 2012.

Docket Number: 12–031. *Applicant:* Penn State College of Medicine, 500 University Dr., Hershey, PA 17033. *Instrument:* Electron Microscope. *Manufacturer:* JEOL, Ltd., Japan. *Intended Use:* The instrument will be used to further advance the body of research of the College of Medicine and the greater scientific community by studying multi-protein complexes, DNA protein complexes, small polypeptide biding sites and RNA polymerase, among other specimens. The instrument will be used for 3D image reconstruction from tomograms and single particle data sets imaged from vitrified specimens. *Justification for Duty-Free Entry:* There are no instruments of the same general category manufactured in the United States. *Application accepted by Commissioner of Customs:* June 13, 2012.

Dated: June 27, 2012.

Gregory W. Campbell,

Director of Subsidies Enforcement Import Administration.

[FR Doc. 2012–16462 Filed 7–3–12; 8:45 am]

BILLING CODE 3510–DS–P

DEPARTMENT OF COMMERCE

International Trade Administration

[A–570–967]

Aluminum Extrusions From the People's Republic of China: Preliminary Results of Changed Circumstances Review

AGENCY: Import Administration, International Trade Administration, Department of Commerce.

SUMMARY: On December 27, 2011, the Department of Commerce (''the Department'') published in the **Federal Register** a notice of initiation of a changed circumstances review (''CCR'') of the antidumping duty order on aluminum extrusions from the People's Republic of China (''PRC'') in order to determine whether Guangdong Zhongya Aluminum Company Limited (''Guangdong Zhongya'') is the successor-in-interest to Zhaoqing New Zhongya Aluminum Co., Ltd. (''New Zhongya''). We have preliminarily determined that Guangdong Zhongya is the successor-in-interest to New Zhongya for the purpose of determining antidumping duty liability. Interested parties are invited to comment on these preliminary results.

DATES: *Effective Date:* July 5, 2012.

FOR FURTHER INFORMATION CONTACT: Eve Wang, AD/CVD Operations, Office 8, Import Administration, International Trade Administration, U.S. Department of Commerce, 1401 Constitution Avenue NW., Washington, DC 20230; telephone: 202–482–6231.

SUPPLEMENTARY INFORMATION:

Background

New Zhongya, a producer of aluminum extrusions, participated in the antidumping duty investigation of aluminum extrusions from the PRC. The Department issued its final determination for this investigation on April 4, 2011.[1] As a result of that final determination, New Zhongya's weighted-average dumping margin is 33.28 percent.[2] The antidumping duty order was issued on May 26, 2011.[3]

On November 7, 2011, New Zhongya requested a changed circumstances review claiming that it had undergone a name change to Guangdong Zhongya Aluminum Company Limited.[4] New Zhongya requested that the antidumping duty rate, which was assigned to New Zhongya and was in effect before the date of the name change (*i.e.,* August 16, 2011), continue under the new name. New Zhongya's request, stating that it underwent no changes other than the change in the name, was accompanied by supporting documents from Chinese government authorities,[5] recognizing and approving the name change. Specifically, New Zhongya stated that no changes were made in personnel, management, ownership, facilities, customers, suppliers, *etc.*

In response to this request, on December 27, 2011, the Department initiated a CCR, and on January 27, 2012, the Department issued a questionnaire to New Zhongya. New Zhongya filed its questionnaire response on February 24, 2012. Its submission included organizational charts, employment contracts, board meeting minutes, monthly income statements

---

[1] *See Aluminum Extrusions From the People's Republic of China: Final Determination of Sales at Less Than Fair Value,* 76 FR 18524 (April 4, 2011); *see also Aluminum Extrusions From the People's Republic of China: Notice of Correction to the Final Determination of Sales at Less Than Fair Value,* 76 FR 20627 (April 13, 2011).

[2] *Id.*

[3] *See Aluminum Extrusions from the People's Republic of China: Antidumping Duty Order,* 76 FR 30650 (May 26, 2011).

[4] *See* Letter from New Zhongya to the Department, ''Extruded Aluminum from China'' (request for Changed Circumstances Review), dated November 7, 2011.

[5] These Chinese government authorities include the Bureau of Foreign Trade & Economic Cooperation of High and New Technology Industrial Development Zone of Zhaoqing and the Administration Bureau for Industry and Commerce of Zhaoqing City.

and balance sheets, a product list, full lists of suppliers and home—and U.S.-market customers, and sample supplier and customer invoices, as well as narrative responses confirming a name change from New Zhongya to Guangdong Zhongya.

The petitioner in this proceeding, Aluminum Extrusions Fair Trade Committee, has not commented on New Zhongya's request.

Scope of the Order

The merchandise covered by the order is aluminum extrusions which are shapes and forms, produced by an extrusion process, made from aluminum alloys having metallic elements corresponding to the alloy series designations published by The Aluminum Association commencing with the numbers 1, 3, and 6 (or proprietary equivalents or other certifying body equivalents). Specifically, the subject merchandise made from aluminum alloy with an Aluminum Association series designation commencing with the number 1 contains not less than 99 percent aluminum by weight. The subject merchandise made from aluminum alloy with an Aluminum Association series designation commencing with the number 3 contains manganese as the major alloying element, with manganese accounting for not more than 3.0 percent of total materials by weight. The subject merchandise is made from an aluminum alloy with an Aluminum Association series designation commencing with the number 6 contains magnesium and silicon as the major alloying elements, with magnesium accounting for at least 0.1 percent but not more than 2.0 percent of total materials by weight, and silicon accounting for at least 0.1 percent but not more than 3.0 percent of total materials by weight. The subject aluminum extrusions are properly identified by a four-digit alloy series without either a decimal point or leading letter. Illustrative examples from among the approximately 160 registered alloys that may characterize the subject merchandise are as follows: 1350, 3003, and 6060.

Aluminum extrusions are produced and imported in a wide variety of shapes and forms, including, but not limited to, hollow profiles, other solid profiles, pipes, tubes, bars, and rods. Aluminum extrusions that are drawn subsequent to extrusion (''drawn aluminum'') are also included in the scope.

Aluminum extrusions are produced and imported with a variety of finishes (both coatings and surface treatments), and types of fabrication. The types of coatings and treatments applied to subject aluminum extrusions include, but are not limited to, extrusions that are mill finished (*i.e.,* without any coating or further finishing), brushed, buffed, polished, anodized (including bright-dip anodized), liquid painted, or powder coated. Aluminum extrusions may also be fabricated, *i.e.,* prepared for assembly. Such operations would include, but are not limited to, extrusions that are cut-to-length, machined, drilled, punched, notched, bent, stretched, knurled, swedged, mitered, chamfered, threaded, and spun. The subject merchandise includes aluminum extrusions that are finished (coated, painted, *etc.*), fabricated, or any combination thereof.

Subject aluminum extrusions may be described at the time of importation as parts for final finished products that are assembled after importation, including, but not limited to, window frames, door frames, solar panels, curtain walls, or furniture. Such parts that otherwise meet the definition of aluminum extrusions are included in the scope. The scope includes the aluminum extrusion components that are attached (*e.g.,* by welding or fasteners) to form subassemblies, *i.e.,* partially assembled merchandise unless imported as part of the ''finished goods kit'' defined further below. The scope does not include the non-aluminum extrusion components of subassemblies or subject kits.

Subject extrusions may be identified with reference to their end use, such as fence posts, electrical conduits, door thresholds, carpet trim, or heat sinks (that do not meet the finished heat sink exclusionary language below). Such goods are subject merchandise if they otherwise meet the scope definition, regardless of whether they are ready for use at the time of importation.

The following aluminum extrusion products are excluded: Aluminum extrusions made from aluminum alloy with an Aluminum Association series designations commencing with the number 2 and containing in excess of 1.5 percent copper by weight; Aluminum extrusions made from aluminum alloy with an Aluminum Association series designation commencing with the number 5 and containing in excess of 1.0 percent magnesium by weight; and aluminum extrusions made from aluminum alloy with an Aluminum Association series designation commencing with the number 7 and containing in excess of 2.0 percent zinc by weight.

The scope also excludes finished merchandise containing aluminum extrusions as parts that are fully and permanently assembled and completed at the time of entry, such as finished windows with glass, doors with glass or vinyl, picture frames with glass pane and backing material, and solar panels. The scope also excludes finished goods containing aluminum extrusions that are entered unassembled in a ''finished goods kit.'' A finished goods kit is understood to mean a packaged combination of parts that contains, at the time of importation, all of the necessary parts to fully assemble a final finished good and requires no further finishing or fabrication, such as cutting or punching, and is assembled ''as is'' into a finished product. An imported product will not be considered a ''finished goods kit'' and therefore excluded from the scope of the investigation merely by including fasteners such as screws, bolts, *etc.* in the packaging with an aluminum extrusion product.

The scope also excludes aluminum alloy sheet or plates produced by other than the extrusion process, such as aluminum products produced by a method of casting. Cast aluminum products are properly identified by four digits with a decimal point between the third and fourth digit. A letter may also precede the four digits. The following Aluminum Association designations are representative of aluminum alloys for casting: 208.0, 295.0, 308.0, 355.0, C355.0, 356.0, A356.0, A357.0, 360.0, 366.0, 380.0, A380.0, 413.0, 443.0, 514.0, 518.1, and 712.0. The scope also excludes pure, unwrought aluminum in any form.

The scope also excludes collapsible tubular containers composed of metallic elements corresponding to alloy code 1080A as designated by the Aluminum Association where the tubular container (excluding the nozzle) meets each of the following dimensional characteristics: (1) Length of 37 mm or 62 mm, (2) outer diameter of 11.0 mm or 12.7 mm, and (3) wall thickness not exceeding 0.13 mm.

Also excluded from the scope of this order are finished heat sinks. Finished heat sinks are fabricated heat sinks made from aluminum extrusions the design and production of which are organized around meeting certain specified thermal performance requirements and which have been fully, albeit not necessarily individually, tested to comply with such requirements.

Imports of the subject merchandise are provided for under the following categories of the Harmonized Tariff Schedule of the United States (''HTS''): 7604.21.0000, 7604.29.1000,

7604.29.3010, 7604.29.3050, 7604.29.5030, 7604.29.5060, 7608.20.0030, 7608.20.0090, 9506.11.4080, 9506.51.4000, 9506.51.6000, 9506.59.4040, 9506.70.2090, 9506.99.0510, 9506.99.0520, 9506.99.0530, 9506.99.1500, 9506.99.2000, 9506.99.2580, 9506.99.2800, 9506.99.6080, 9507.30.2000, 9507.30.4000, 9507.30.6000, 9507.90.6000, 8419.90.1000, 8302.10.3000, 8302.10.6030, 8302.10.6060, 8302.10.6090, 8302.30.3010, 8302.30.3060, 8302.41.3000, 8302.41.6015, 8302.41.6045, 8302.41.6050, 8302.41.6080, 8302.42.3010, 8302.42.3015, 8302.42.3065, 8302.49.6035, 8302.49.6045, 8302.49.6055, 8302.49.6085, 8302.60.9000, 8306.30.0000, 9403.90.8061, 9403.90.1040, 9403.90.1050, 9403.90.1085, 9403.90.2540, 9403.90.2580, 9403.90.4005, 9403.90.4010, 9403.90.4060, 9403.90.5005, 9403.90.5010, 9403.90.5080, 9403.90.6005, 9403.90.6010, 9403.90.6080, 9403.90.7005, 9403.90.7010, 9403.90.7080, 9403.90.8010, 9403.90.8015, 9403.90.8020, 9403.90.8041, 9403.90.8051, 9403.10.00, 9403.20.00, 8479.89.98, 8479.90.94, 8513.90.20, 8302.50.0000, 9506.91.0010, 9506.91.0020, 9506.91.0030, 7615.19.30, 7615.19.50, 7615.19.70, 7615.19.90, 7615.19.10, 7615.20.00, 7616.99.10, and 7616.99.50. The subject merchandise entered as parts of other aluminum products may be classifiable under the following additional Chapter 76 subheadings: 7610.10, 7610.90, 7615.19, 7615.20, and 7616.99 as well as under other HTS chapters. In addition, fin evaporator coils may be classifiable under HTS numbers: 8418.99.80.50 and 8418.99.80.60. While HTS subheadings are provided for convenience and customs purposes, the written description of the scope is dispositive.

Preliminary Results of the Review

In this changed circumstances review, and in accordance with section 751(b) of the Tariff Act of 1930, as amended (the ''Act''), the Department has conducted a successor-in-interest analysis. In making a successor-in-interest determination, the Department examines several factors, including, but not limited to, changes in the following: (1) Management; (2) production facilities; (3) supplier relationships; and (4) customer base.[6] While no single factor or combination of factors will necessarily provide a dispositive indication of a successor-in-interest relationship, generally, the Department will consider the new company to be the successor to the previous company if the new company's resulting operation is not materially dissimilar to that of its predecessor.[7] Thus, if the record evidence demonstrates that, with respect to the production and sale of the subject merchandise, the new company operates as the same business entity as the predecessor company, the Department may assign the new company the cash deposit rate of its predecessor.

In accordance with 19 CFR 351.221(c)(3)(i), the Department preliminarily determines that Guangdong Zhongya is the successor-in-interest to New Zhongya. The record evidence indicates that Guangdong Zhongya has retained New Zhongya's management and organizational structure, operations and production facilities, and significantly similar supplier and customer relationships.

All of New Zhongya's executive personnel remain in the same positions in Guangdong Zhongya's organization, and the organizational structure remains the same.[8] Operationally, a comparison of New Zhongya's financial statements for the periods before the name change and those of Guangdong Zhongya for the periods after indicates that Guangdong Zhongya operates as the same business entity. For instance, balance sheets from before the name change and from after the name change show identical Year Beginning Balances for all line items.[9] Furthermore, the paid-in-capital and capital reserve from the period prior to the name change in New Zhongya's balance sheet are the same as those during the same period in Guangdong Zhongya's balance sheet. Similarly, Guangdong Zhongya's closing retained earnings balance for August equals New Zhongya's July (prior-month) closing retained earnings balance plus the monthly profit from Guangdong Zhongya's income statement for August, as would be expected if they were the same company.

The evidence on the record also shows that New Zhongya retained a significant majority of its suppliers after it became Guangdong Zhongya.[10] Moreover, Guangdong Zhongya's home-market customer base remains largely the same as New Zhongya's, and its U.S. customer base is identical to New Zhongya's U.S. customer base.[11]

Therefore, the Department preliminarily finds that the record evidence supports Guangdong Zhongya's claim that it is the successor-in-interest to New Zhongya. Given the totality of the considered factors, the record evidence demonstrates that Guangdong Zhongya is the same entity, operating in a significantly similar manner to New Zhongya. Consequently, the Department preliminarily determines that Guangdong Zhongya should be given the same antidumping duty treatment as New Zhongya, *i.e.,* the separate rate status previously afforded to New Zhongya and the accompanying 33.28 percent antidumping duty cash deposit rate.

If these preliminary results are adopted in our final results of this changed circumstances review, the Department will instruct U.S. Customs and Border Protection to suspend liquidation and collect a cash deposit rate of 33.28 percent on all shipments of the subject merchandise exported by Guangdong Zhongya and entered, or withdrawn from warehouse, for consumption, on or after the publication date of the final results of this changed circumstances review.[12] This deposit rate shall remain in effect until further notice.

Public Comment

Any interested party may request a hearing within 10 days of publication of this notice in accordance with 19 CFR 351.310(c). Interested parties may submit case briefs no later than 14 days after the date of publication of this notice, in accordance with 19 CFR 351.309(c)(1)(ii). Rebuttal briefs, limited to issues raised in the case briefs, may be filed no later than five days after the case briefs, in accordance with 19 CFR 351.309(d)(1). Hearing requests should contain the following information: (1) The party's name, address, and telephone number; (2) the number of

[6] *See, e.g., Notice of Final Results of Changed Circumstances Antidumping Duty Administrative Review: Polychloroprene Rubber From Japan,* 67 FR 58 (January 2, 2002).

[7] *See, e.g., Fresh and Chilled Atlantic Salmon From Norway; Final Results of Changed Circumstances Antidumping Duty Administrative Review,* 64 FR 9979, 9980 (March 1, 1999).

[8] *See* Letter from New Zhongya to the Department, ''Extruded Aluminum from China'' (response to the Department's questionnaire), dated February 27, 2012.

[9] *See id.*

[10] *See* New Zhongya's response to the Questionnaire, ''Extruded Aluminum from China,'' dated February 27, 2012, at Exhibit 5.

[11] *See id.* at Exhibit 8.

[12] *See Stainless Steel Plate in Coils From Belgium: Notice of Final Results of Antidumping Duty Changed Circumstances Review,* 77 FR 21963 (April 12, 2012) and accompanying Issues and Decision Memorandum; *see also Notice of Final Results of Antidumping Duty Changed Circumstances Review: Certain Frozen Warmwater Shrimp From Thailand,* 75 FR 74684 (December 1, 2010) and accompanying Issues and Decision Memorandum.

participants; and (3) a list of the issues to be discussed. Oral presentations will be limited to issues raised in the briefs. If a request for a hearing is made, parties will be notified of the time and date for the hearing to be held at the U.S. Department of Commerce, 14th Street and Constitution Avenue NW., Washington, DC 20230.[13] The Department intends to issue its final results of review within 270 days after the date on which the changed circumstances review was initiated, in accordance with 19 CFR 351.216(e), and will publish those final results in the **Federal Register**.

This notice is published in accordance with sections 751(b)(1) and 777(i) of the Act and 19 CFR 351.216.

Dated: June 27, 2012.

Paul Piquado,

Assistant Secretary for Import Administration.

[FR Doc. 2012–16460 Filed 7–3–12; 8:45 am]

BILLING CODE 3510–DS–P

[13] *See* 19 CFR 351.310(d).

DEPARTMENT OF COMMERCE

National Oceanic and Atmospheric Administration

RIN 0648–XC092

Draft Programmatic Environmental Impact Statement and Restoration Plan To Compensate for Injuries to Natural Resources in Portland Harbor, OR

AGENCY: National Marine Fisheries Service (NMFS), National Oceanic and Atmospheric Administration (NOAA), Commerce.

ACTION: Notice of Availability of a Draft Programmatic Environmental Impact Statement and Restoration Plan; request for comments.

SUMMARY: NOAA, the Department of the Interior (U.S. Fish and Wildlife Service), the Oregon Department of Fish and Wildlife, the Nez Perce Tribe, the Confederated Tribes of the Warm Springs Indian Reservation of Oregon, the Confederated Tribes of the Umatilla Indian Reservation, the Confederated Tribes of Siletz Indians, and the Confederated Tribes of the Grand Ronde Community of Oregon are collectively referred to as the Trustee Council for this case. The Trustee Council is providing notice that the Draft Programmatic Environmental Impact Statement (PEIS) and Draft Restoration Plan are being released for public comment. The Restoration Plan identifies a restoration approach to compensate for injuries to natural resources in Portland Harbor in the Lower Willamette River. The Trustees seek damages from potentially responsible parties (PRPs) to restore, rehabilitate, replace or acquire the equivalent of natural resources and services injured by the release of hazardous substances in Portland Harbor. This notice provides details on the availability of and opportunity to comment on the Draft PEIS and Restoration Plan. Comments may be submitted in written form or verbally at a public meeting.

DATES: Written comments must be received by October 7, 2012.

Public meetings to discuss and comment on the Draft PEIS/RP will be held as follows:

- *Tuesday, July 17, 2012,* 5:30–7:30 p.m., St. Johns Community Center, 8427 N. Central Street, Portland, OR 97203.
- *Thursday, August 2, 2012,* 4:30–6:30 p.m., Portland State University, Smith Memorial Student Union, Room 238, 1719 SW 10th Ave., Portland, Oregon 97201.

ADDRESSES: Written comments on the Draft PEIS/RP should be sent to Megan Callahan Grant, NOAA Restoration Center, 1201 NE Lloyd Blvd. #1100, Portland, OR 97232. Comments may be submitted electronically to *portlandharbor.restoration@noaa.gov.*

The Draft PEIS and Restoration Plan is available for viewing at the following locations:

- Multnomah County Central Library, 801 SW 10th Avenue, Portland, OR 97205.
- Multnomah County Northwest Library, 2300 NW Thurman Avenue, Portland, OR 97210.
- Multnomah County St. Johns Library, 7510 N. Charleston Avenue, Portland, OR 97203.

A full electronic copy may be downloaded at: *http://www.fws.gov/oregonfwo/Contaminants/PortlandHarbor/.*

FOR FURTHER INFORMATION CONTACT: Megan Callahan Grant at (503) 231–2213 or email at *megan.callahan-grant@noaa.gov.*

SUPPLEMENTARY INFORMATION: The Comprehensive Environmental Response, Compensation, and Liability Act of 1980 (CERCLA), the Oil Pollution Act (OPA) of 1990, the Clean Water Act (CWA), the National Oil and Hazardous Substances Pollution Contingency Plan (National Contingency Plan [NCP]), and other applicable federal and state laws and regulations provide a legal framework for addressing injuries to the nation's natural resources resulting from releases of hazardous substances and discharges of oil. The National Environmental Policy Act (NEPA) of 1960 requires an assessment of any federal action that may impact the environment, in this case development of a Restoration Plan.

In January of 2007, the Portland Harbor Trustee Council released a Pre-Assessment Screen (PAS) for the Portland Harbor Superfund site. The PAS concluded that natural resources in the area have been affected or potentially affected from releases or discharges of contaminants. Based on the conclusions of the PAS, the Portland Harbor Trustee Council determined that proceeding past the preassessment phase to a full natural resource damage assessment was warranted.

Exposed living natural resources include, but are not limited to: (1) Aquatic-dependent mammals such as mink and river otter, and species they depend on as prey items; (2) migratory birds, including osprey, bald eagle, mergansers and other waterfowl, great blue heron, spotted sandpiper and other shorebirds, cliff swallow, belted kingfisher, and other species; (3) threatened and endangered species; (4) anadromous and resident fish, including salmon and steelhead; (5) reptiles and amphibians; (6) aquatic invertebrates; (7) wapato and other aquatic plants.

Exposed habitat types and water natural resources include wetland and upland habitats, groundwater, and surface water. The services that are provided by these potentially affected natural resources include, but are not limited to: (1) Habitat for trust resources, including food, shelter, breeding, foraging, and rearing areas, and other factors essential for survival; (2) consumptive commercial resource use such as commercial fishing; (3) consumptive recreational resource use such as hunting and fishing; (4) non-consumptive uses such as wildlife viewing, photography, and other outdoor recreation activities; (5) primary and secondary contact activities such as swimming and boating; (6) cultural, spiritual, and religious use; (7) option and existence values; (7) traditional foods.

An Assessment Plan was completed in June of 2010. Based on this plan, scientific literature and studies being conducted by the Trustee Council seek to document injuries from hazardous substances found in Portland Harbor. The objective of these studies is to demonstrate (1) how the contamination has harmed the organisms that inhabit the riverine sediments, (2) how the contamination has harmed the fish and wildlife that come into contact with the contaminated sediments or that eat

contaminated prey items, and (3) how the harm to the natural resources has impacted the people that use these resources. Concurrent with the damage assessment, the Trustee Council is conducting restoration planning.

By identifying criteria and guidance to be used in selecting feasible restoration projects, the Restoration Plan provides a framework to maximize the benefits of restoration projects to the affected resources and services in the defined areas of the Lower Willamette River. The Trustee Council analyzed three alternatives including: (1) (Preferred) integrated habitat restoration actions that will benefit multiple species and services (those species listed above as potentially affected by releases of hazardous substances, such as salmon and resident fish, mammals such as mink and river otter, and aquatic-dependent birds such as osprey and bald eagle); (2) species-specific restoration actions (for example, augmenting a species population through artificial production); and (3) a no-action alternative (no action takes place and the public is not compensated). A fourth alternative for restoration without a limited geographic boundary was also considered, but was not moved forward for detailed study because it did not meet the purpose and need for the project.

The Trustee Council has opened an Administrative Record (Record). The Record includes documents that the Trustees relied upon during the development of the Draft Restoration Plan and Draft PEIS. The Record is on file at the offices of Parametrix, a contractor to NOAA. The Record is also available at: *http://www.fws.gov/oregonfwo/contaminants/PortlandHarbor/default.asp.*

Dated: June 29, 2012.

Brian T. Pawlak,

Acting Director, Office of Habitat Conservation, National Marine Fisheries Service.

[FR Doc. 2012–16490 Filed 7–3–12; 8:45 am]

BILLING CODE 3510–22–P

DEPARTMENT OF DEFENSE

Office of the Secretary

[Docket ID: DoD–2012–OS–0083]

Submission for OMB Review; Comment Request

ACTION: Notice.

The Department of Defense has submitted to OMB for clearance, the following proposal for collection of information under the provisions of the Paperwork Reduction Act (44 U.S.C. chapter 35).

DATES: Consideration will be given to all comments received by August 6, 2012.

Title, Form, and OMB Number: Defense Sexual Assault Incident Database (DSAID); OMB Control Number 0704–0482.

Type of Request: Extension.

Number of Respondents: 3,200.

Responses per Respondent: 1.

Annual Responses: 3,200.

Average Burden per Response: 1 hour.

Annual Burden Hours: 3,200 hours.

Needs and Uses: DSAID is a DoD database that captures uniform data provided by the Military Services and maintains all sexual assault data collected by the Military Services. This database shall be a centralized, case-level database for the uniform collection of data regarding incidence of sexual assaults involving persons covered by DoDD 6495.01 and DoDI 6495.02. DSAID will include information when available, or when not limited by Restricted Reporting, or otherwise prohibited by law, about the nature of the assault, the victim, the offender, and the disposition of reports associated with the assault. Information in the DSAID will be used to respond to congressional reporting requirements, support Military Service SAPR Program management, and inform DoD SAPRO oversight activities.

Affected Public: Federal Government; Individuals or Households; Business or Other For-Profit; Not-For-Profit Institutions; Farms; State, Local or Tribal Government.

Frequency: On occasion.

Respondent's Obligation: Voluntary.

OMB Desk Officer: Ms. Jasmeet Seehra.

Written comments and recommendations on the proposed information collection should be sent to Ms. Seehra at the Office of Management and Budget, Desk Officer for DoD, Room 10236, New Executive Office Building, Washington, DC 20503.

You may also submit comments, identified by docket number and title, by the following method:

• *Federal eRulemaking Portal: http://www.regulations.gov.* Follow the instructions for submitting comments.

Instructions: All submissions received must include the agency name, docket number and title for this **Federal Register** document. The general policy for comments and other submissions from members of the public is to make these submissions available for public viewing on the Internet at *http://www.regulations.gov* as they are received without change, including any personal identifiers or contact information.

DOD Clearance Officer: Ms. Patricia Toppings.

Written requests for copies of the information collection proposal should be sent to Ms. Toppings at WHS/ESD/Information Management Division, 4800 Mark Center Drive, East Tower, Suite 02G09, Alexandria, VA 22350–3100.

Dated: June 28, 2012.

Patricia L. Toppings,

OSD Federal Register Liaison Officer, Department of Defense.

[FR Doc. 2012–16413 Filed 7–3–12; 8:45 am]

BILLING CODE 5001–06–P

DEPARTMENT OF DEFENSE

Office of the Secretary

[Docket ID: DoD–2012–OS–0082]

Proposed Collection; Comment Request

AGENCY: Office of the Under Secretary of Defense for Personnel and Readiness, DoD.

ACTION: Notice.

In compliance with Section 3506(c)(2)(A) of the *Paperwork Reduction Act of 1995,* the Office of the Under Secretary of Defense for Personnel and Readiness announces a proposed public information collection and seeks public comment on the provisions thereof. Comments are invited on: (a) Whether the proposed collection of information is necessary for the proper performance of the functions of the agency, including whether the information shall have practical utility; (b) the accuracy of the agency's estimate of the burden of the proposed information collection; (c) ways to enhance the quality, utility, and clarity of the information to be collected; and (d) ways to minimize the burden of the information collection on respondents, including through the use of automated collection techniques or other forms of information technology.

DATES: Consideration will be given to all comments received by September 4, 2012.

ADDRESSES: You may submit comments, identified by docket number and title, by any of the following methods:

• *Federal eRulemaking Portal: http://www.regulations.gov.* Follow the instructions for submitting comments.

• *Mail:* Federal Docket Management System Office, 4800 Mark Center Drive, East Tower, Suite 02G09, Alexandria, VA 22350–3100.

Instructions: All submissions received must include the agency name, docket number and title for this **Federal Register** document. The general policy for comments and other submissions from members of the public is to make these submissions available for public viewing on the Internet at *http://www.regulations.gov* as they are received without change, including any personal identifiers or contact information.

FOR FURTHER INFORMATION CONTACT: To request more information on this proposed information collection or to obtain a copy of the proposal and associated collection instruments, please write to the Director, Federal Voting Assistance Program, ATTN: John Godley, 4800 Mark Center Drive, Mailbox 10, Alexandria, Virginia 22350–5000.

Title; Associated Form; and OMB Number: Federal Post Card Application (FPCA); Standard Form 76 (SF–76); OMB Control Number 0704–TBD.

Needs and Uses: The information collection requirement is necessary to fulfill the requirement of the Uniformed and Overseas Absentee Voting Act (UOCAVA), 46 U.S.C. 1973ff wherein the Secretary of Defense is to prescribe an official postcard form, containing an absentee voter registration application and an absentee ballot request application for use by the States.

Affected Public: Uniformed Services members, their eligible family members, and U.S. citizens residing outside the U.S. (UOCAVA citizens) who apply for voter registration or request an absentee ballot from their State of residency.

Annual Burden Hours: 300,000. The burden for this collection belongs to the individual States.

Number of Respondents: 1,200,000.

Responses per Respondent: 1.

Average Burden per Response: 15 minutes.

Frequency: Annually.

SUPPLEMENTARY INFORMATION:

Summary of Information Collection

Respondents are UOCAVA citizens who desire to apply for voter registration or request an absentee ballot from their State of residency. The information provided by these citizens is used by the States to determine if the citizen is a resident of a jurisdiction within that State, and therefore eligible to vote within that jurisdiction and to provide absentee ballots to these citizens for Federal elections held within each calendar year. This form is mandated by 42 U.S.C. 1973ff. The Department of Defense does not receive, collect nor maintain any data provided on the form by these citizens; this data is received, collected and maintained by the individual States. The burden for the collection of this data resides with the individual States. If the form is not provided, UOCAVA citizens may not be able to register to vote in their State of residency nor be able to request absentee ballots and thus, may be disenfranchised from their right as a U.S. citizen to participate in the electoral process.

Dated: June 28, 2012.

Patricia L. Toppings,

OSD Federal Register Liaison Officer, Department of Defense.

[FR Doc. 2012–16414 Filed 7–3–12; 8:45 am]

BILLING CODE 5001–06–P

DEPARTMENT OF EDUCATION

Notice of Proposed Information Collection Requests; Institute of Education Sciences; FAFSA Completion Project Evaluation

SUMMARY: The Institute of Education Sciences (IES) at the U.S. Department of Education (ED) is conducting a rigorous study of the Free Application for Federal Student Aid (FAFSA) Completion Project. The project will provide 80 Local Educational Agencies (LEAs) or school districts with access to data on whether specific students have completed the Free Application for Federal Student Aid (FAFSA).

DATES: Interested persons are invited to submit comments on or before September 4, 2012.

ADDRESSES: Written comments regarding burden and/or the collection activity requirements should be electronically mailed to *ICDocketMgr@ed.gov* or mailed to U.S. Department of Education, 400 Maryland Avenue SW., LBJ, Washington, DC 20202–4537. Copies of the proposed information collection request may be accessed from *http://edicsweb.ed.gov,* by selecting the ''Browse Pending Collections'' link and by clicking on link number 04887. When you access the information collection, click on ''Download Attachments'' to view. Written requests for information should be addressed to U.S. Department of Education, 400 Maryland Avenue SW., LBJ, Washington, DC 20202–4537. Requests may also be electronically mailed to *ICDocketMgr@ed.gov* or faxed to 202–401–0920. Please specify the complete title of the information collection and OMB Control Number when making your request.

Individuals who use a telecommunications device for the deaf (TDD) may call the Federal Information Relay Service (FIRS) at 1–800–877–8339.

SUPPLEMENTARY INFORMATION: Section 3506 of the Paperwork Reduction Act of 1995 (44 U.S.C. chapter 35) requires that Federal agencies provide interested parties an early opportunity to comment on information collection requests. The Acting Director, Information Collection Clearance Division, Privacy, Information and Records Management Services, Office of Management, publishes this notice containing proposed information collection requests at the beginning of the Departmental review of the information collection. The Department of Education is especially interested in public comment addressing the following issues: (1) Is this collection necessary to the proper functions of the Department; (2) will this information be processed and used in a timely manner; (3) is the estimate of burden accurate; (4) how might the Department enhance the quality, utility, and clarity of the information to be collected; and (5) how might the Department minimize the burden of this collection on the respondents, including through the use of information technology. Please note that written comments received in response to this notice will be considered public records.

Title of Collection: FAFSA Completion Project Evaluation.

OMB Control Number: Pending.

Type of Review: New.

Total Estimated Number of Annual Responses: 200.

Total Estimated Number of Annual Burden Hours: 1,120.

Abstract: This information is intended to help schools implement targeted outreach to seniors and their families who have not yet submitted a FAFSA, or who submitted a FAFSA that may be incomplete. The evaluation of the project is being conducted by IES staff in the National Center for Education Evaluation. The study will use a delayed-treatment control group design, and will examine whether there is an impact from access to the data on students' application for and receipt of federal student aid and a proxy for college enrollment. The data collection to address these research questions will create minimal burden on respondents and have limited cost to the government. IES is requesting permission to obtain lists of high schools and student rosters from the participating districts or their high schools. Other data for the study—completion of a FAFSA, receipt of Pell Grant, and a proxy for college enrollment (whether an institution of

higher education has drawn down the Pell Grant funds for individual students)—will come from existing ED administrative data that will not generate any new burden because they are already collected for other purposes. The analyses will be conducted internally by IES staff on data that is stripped of personally identifiable information. The results will be summarized in an internal memo.

Dated: June 29, 2012.

Kate Mullan,

Acting Director, Information Collection Clearance Division, Privacy, Information and Records Management Services, Office of Management.

[FR Doc. 2012–16424 Filed 7–3–12; 8:45 am]

BILLING CODE 4000–01–P

DEPARTMENT OF ENERGY

[OE Docket No. EA–386]

Application To Export Electric Energy; IPR–GDF SUEZ Energy Marketing North America, Inc.

AGENCY: Office of Electricity Delivery and Energy Reliability, DOE.

ACTION: Notice of application.

SUMMARY: IPR–GDF SUEZ Energy Marketing North America, Inc. (GSEMNA) has applied for authority to transmit electric energy from the United States to Mexico pursuant to section 202(e) of the Federal Power Act (FPA).

DATES: Comments, protests, or motions to intervene must be submitted on or before August 6, 2012.

ADDRESSES: Comments, protests, or motions to intervene should be addressed to: Christopher Lawrence, Office of Electricity Delivery and Energy Reliability, Mail Code: OE–20, U.S. Department of Energy, 1000 Independence Avenue SW., Washington, DC 20585. Because of delays in handling conventional mail, it is recommended that documents be transmitted by overnight mail, by electronic mail to *Christopher.Lawrence@hq.doe.gov,* or by facsimile to 202–586–8008.

FOR FURTHER INFORMATION CONTACT: Christopher Lawrence (Program Office) at 202–586–5260, or by email to *Christopher.Lawrence@hq.doe.gov.*

SUPPLEMENTARY INFORMATION: Exports of electricity from the United States to a foreign country are regulated by the Department of Energy (DOE) pursuant to sections 301(b) and 402(f) of the Department of Energy Organization Act (42 U.S.C. 7151(b), 7172(f)) and require authorization under section 202(e) of the FPA (16 U.S.C. 824a(e)).

On June 22, 2012, DOE received an application from GSEMNA for authority to transmit electric energy from the United States to Mexico for five years as a power marketer using existing international transmission facilities. GSEMNA does not own any electric transmission facilities nor does it hold a franchised service area.

The electric energy that GSEMNA proposes to export to Mexico would be surplus energy purchased from electric utilities, Federal power marketing agencies, and other entities within the United States. The existing international transmission facilities to be utilized by GSEMNA have previously been authorized by Presidential permits issued pursuant to Executive Order 10485, as amended, and are appropriate for open access transmission by third parties.

Procedural Matters: Any person desiring to be heard in this proceeding should file a comment or protest to the application at the address provided above. Protests should be filed in accordance with Rule 211 of the Federal Energy Regulatory Commission's (FERC) Rules of Practice and Procedures (18 CFR 385.211). Any person desiring to become a party to these proceedings should file a motion to intervene at the above address in accordance with FERC Rule 214 (385.214). Five copies of such comments, protests, or motions to intervene should be sent to the address provided above on or before the date listed above.

Comments on the GSEMNA application to export electric energy to Mexico should be clearly marked with OE Docket No. 386. An additional copy is to be filed directly with Cesar Seymour, Director-Special Projects, IPR–GDF SUEZ Energy Marketing North America, Inc., 1990 Oak Post Blvd., Suite 1900, Houston, TX 77056 and Catherine P. McCarthy, Bracewell & Giuliani LLP, 2000 K Street NW., Suite 500, Washington, DC 20006.

A final decision will be made on this application after the environmental impacts have been evaluated pursuant to DOE's National Environmental Policy Act Implementing Procedures (10 CFR part 1021) and after a determination is made by DOE that the proposed action will not have an adverse impact on the reliability of the U.S. electric power supply system.

Copies of this application will be made available, upon request, for public inspection and copying at the address provided above, by accessing the program Web site at *http://energy.gov/node/11845* or by emailing Angela Troy at *Angela.Troy@hq.doe.gov.*

Issued in Washington, DC, on June 28, 2012.

Brian Mills,

Director, Permitting and Siting, Office of Electricity Delivery and Energy Reliability.

[FR Doc. 2012–16464 Filed 7–3–12; 8:45 am]

BILLING CODE 6450–01–P

DEPARTMENT OF ENERGY

[OE Docket No. EA–385]

Application To Export Electric Energy; Dynasty Power, Inc.

AGENCY: Office of Electricity Delivery and Energy Reliability, DOE.

ACTION: Notice of application.

SUMMARY: Dynasty Power, Inc. (Dynasty Power) has applied for authority to transmit electric energy from the United States to Canada pursuant to section 202(e) of the Federal Power Act (FPA).

DATES: Comments, protests, or motions to intervene must be submitted on or before August 6, 2012.

ADDRESSES: Comments, protests, or motions to intervene should be addressed to: Christopher Lawrence, Office of Electricity Delivery and Energy Reliability, Mail Code: OE–20, U.S. Department of Energy, 1000 Independence Avenue SW., Washington, DC 20585. Because of delays in handling conventional mail, it is recommended that documents be transmitted by overnight mail, by electronic mail to *Christopher.Lawrence@hq.doe.gov,* or by facsimile to 202–586–8008.

FOR FURTHER INFORMATION CONTACT: Christopher Lawrence (Program Office) at 202–586–5260, or by email to *Christopher.Lawrence@hq.doe.gov.*

SUPPLEMENTARY INFORMATION: Exports of electricity from the United States to a foreign country are regulated by the Department of Energy (DOE) pursuant to sections 301(b) and 402(f) of the Department of Energy Organization Act (42 U.S.C. 7151(b), 7172(f)) and require authorization under section 202(e) of the FPA (16 U.S.C. 824a(e)).

On June 14, 2012, DOE received an application from Dynasty Power for authority to transmit electric energy from the United States to Canada for five years as a power marketer using existing international transmission facilities. Dynasty Power does not own any electric transmission facilities nor does it hold a franchised service area. Dynasty Power states that it will make all of the necessary commercial arrangements and will obtain any and all of the required regulatory approvals

to affect the export of electricity to Canada as requested.

The electric energy that Dynasty Power proposes to export to Canada would be surplus energy purchased from electric utilities and Federal power marketing agencies within the United States. The existing international transmission facilities to be utilized by Dynasty Power have previously been authorized by Presidential permits issued pursuant to Executive Order 10485, as amended, and are appropriate for open access transmission by third parties.

Procedural Matters: Any person desiring to be heard in this proceeding should file a comment or protest to the application at the address provided above. Protests should be filed in accordance with Rule 211 of the Federal Energy Regulatory Commission's (FERC) Rules of Practice and Procedures (18 CFR 385.211). Any person desiring to become a party to these proceedings should file a motion to intervene at the above address in accordance with FERC Rule 214 (385.214). Five copies of such comments, protests, or motions to intervene should be sent to the address provided above on or before the date listed above.

Comments on the Dynasty Power application to export electric energy to Canada should be clearly marked with OE Docket No. EA–385. An additional copy(s) is to be filed directly with Allen Cho, President, and Todd McRae, Risk Manager, Dynasty Power, Inc, 500 715 5th Ave. SW., Calgary AB, CN T2P2X6 and Bonnie A. Suchman, Troutman Sanders LLP, 401 9th Street NW., Suite 1000, Washington, DC 20004.

A final decision will be made on this application after the environmental impacts have been evaluated pursuant to DOE's National Environmental Policy Act Implementing Procedures (10 CFR part 1021) and after a determination is made by DOE that the proposed action will not have an adverse impact on the reliability of the U.S. electric power supply system.

Copies of this application will be made available, upon request, for public inspection and copying at the address provided above, by accessing the program Web site at *http://energy.gov/node/11845* or by emailing Angela Troy at *Angela.Troy@hq.doe.gov.*

Issued in Washington, DC, on June 28, 2012.

Brian Mills,

Director, Permitting and Siting, Office of Electricity Delivery and Energy Reliability.

[FR Doc. 2012–16465 Filed 7–3–12; 8:45 am]

BILLING CODE 6450–01–P

DEPARTMENT OF ENERGY

State Energy Advisory Board (STEAB)

AGENCY: Energy Efficiency and Renewable Energy, Department of Energy.

ACTION: Notice of open teleconference.

SUMMARY: This notice announces a teleconference call of the State Energy Advisory Board (STEAB). The Federal Advisory Committee Act (Pub. L. 92–463; 86 Stat.770) requires that public notice of these meetings be announced in the **Federal Register**.

DATES: Thursday, July 19, 2012 from 3:30 p.m.–4 p.m., EST. To receive the call-in number and passcode, please contact the Board's Designated Federal Officer (DFO) at the address or phone number listed below.

FOR FURTHER INFORMATION CONTACT: Gil Sperling, STEAB Designated Federal Officer, U.S. Department of Energy, Office of Energy Efficiency and Renewable Energy, 1000 Independence Ave. SW., Washington, DC, 20585. Phone number is (202) 287–1644.

SUPPLEMENTARY INFORMATION:

Purpose of the Board: To make recommendations to the Assistant Secretary for the Office of Energy Efficiency and Renewable Energy regarding goals and objectives, programmatic and administrative policies, and to otherwise carry out the Board's responsibilities as designated in the State Energy Efficiency Programs Improvement Act of 1990 (Pub. L. 101–440).

Tentative Agenda: Follow-up on outstanding items from the June Board meeting, update the Board on the activities of the STEAB's Task Forces, review letters and resolutions transmitted to EERE on behalf of the STEAB, and provide an update to the Board on routine business matters and other topics of interest.

Public Participation: The meeting is open to the public. Written statements may be filed with the Board either before or after the meeting. Members of the public who wish to make oral statements pertaining to agenda items should contact Gil Sperling at the address or telephone number listed above. Requests to make oral comments must be received five days prior to the meeting; reasonable provision will be made to include requested topic(s) on the agenda. The Chair of the Board is empowered to conduct the meeting in a fashion that will facilitate the orderly conduct of business.

Minutes: The minutes of the meeting will be available for public review and copying within 60 days on the STEAB Web site, *www.steab.org.*

Issued at Washington, DC, on June 28, 2012.

LaTanya R. Butler,

Acting Deputy Committee Management Officer.

[FR Doc. 2012–16463 Filed 7–3–12; 8:45 am]

BILLING CODE 6450–01–P

DEPARTMENT OF ENERGY

Office of Energy Efficiency and Renewable Energy

Proposed Agency Information Collection

AGENCY: Office of Energy Efficiency and Renewable Energy, Department of Energy (DOE).

ACTION: Submission for Office of Management and Budget (OMB) review; comment request.

SUMMARY: The Department of Energy has submitted to the OMB for clearance, a proposal for collection of information pursuant to the Paperwork Reduction Act of 1995. The collection would be used to develop a scorecard that would assist DOE's Clean Cities Coalitions and stakeholders in assessing the level of readiness of their communities for plug-in electric vehicles. Information collected would allow DOE to provide respondents with an objective assessment of their communities' readiness for PEV adoption and an understanding of their commitment to successful deployment of PEVs, and is needed to ensure appropriate evaluation of progress in deploying PEVS.

DATES: Comments regarding this collection must be received on or before August 6, 2012. If you anticipate that you will be submitting comments, but find it difficult to do so within the period of time allowed by this notice, please advise the OMB Desk Officer of your intention to make a submission as soon as possible. The Desk Officer may be telephoned at 202–395–4650.

ADDRESSES: Written comments should be sent to: Desk Officer for the Department of Energy, Office of Information and Regulatory Affairs, Office of Management and Budget, New Executive Office Building, Room 10102, 735 17th Street NW., Washington, DC 20503. And to Ms. Linda Bluestein, Office of Energy Efficiency and Renewable Energy (EE–2G), U.S. Department of Energy, 1000 Independence Avenue SW., Washington, DC 20585–0121, or by fax at 202–586–1600, or by email at *Linda.Bluestein@ee.doe.gov.*

FOR FURTHER INFORMATION CONTACT: Ms. Linda Bluestein at the address listed above in **ADDRESSES**.

SUPPLEMENTARY INFORMATION: This information collection request contains: (1) *OMB No.:* {New}; (2) *Information Collection Request Title:* Clean Cities Plug-In Vehicle Community Readiness Scorecard; (3*) Type of Request:* New collection; (4) *Purpose:* DOE's Clean Cities initiative has developed a voluntary scorecard to assist its coalitions and stakeholders in assessing the level of readiness of their communities for plug-in electric vehicles. The principal objective of the scorecard is to provide respondents with an objective assessment and estimate of their respective community's readiness for PEV deployment as well as understand the respective community's commitment to deploying these vehicles successfully. DOE intends the scorecard to be completed by a city/county/regional sustainability or energy coordinator. As the intended respondent may not be aware of every aspect of local or regional PEV readiness, coordination among local stakeholders to gather appropriate information may be necessary.

The scorecard assessment effort will rely on responses to questions the respondent chooses to answer. The multiple-choice questions address the following topic areas: (1) Electric vehicle supply equipment permitting and inspection process; (2) PEV and electric vehicle supply equipment availability and numbers; (3) laws, incentives, and financing; (4) education and outreach; (5) utility interaction; and (6) vehicle and infrastructure planning. Respondents will provide answers through a user-friendly online interface. The answers will then be translated through a simple algorithm that will establish appropriate quantitative criteria, translating the readiness measures across several weighted categories into numeric data. Using a numberless color spectrum, a community will be rated against itself, with the colored spectrum results made available only to the respondent community. The total rankings will be normalized into a ''score'', and communities will see their own rating and may be compared to other cities.

The scorecard will use one information collection system, an online system. No other data collection system will be employed to support the scorecard. The online scorecard system DOE has developed provides several advantages. First, it avoids the need to download any forms or materials, though respondents may print out the full list of questions and answers, or a portion thereof if they wish. Second, avoiding downloads also limits potential security threats. Third, the designed system allows respondents to dynamically compare historical records, providing the opportunity to revisit the scorecard however often they like to track progress. Further, employing an online system also eliminates version control concerns, allowing for a single update to ensure that all scorecard users are using the current version.

The voluntary scorecard may be completed at any time, and there is no date by which the scorecard questions must be completed. Calculation of outcomes will be undertaken on an ongoing basis, immediately following completion of the scorecard questionnaire.

While there are approximately 90 Clean Cities Coalitions across the United States, DOE expects that other communities may want to avail themselves of the opportunity to assess their respective community's PEV readiness. Therefore, DOE expects a total respondent population of approximately 100 respondents. Selecting the multiple choice answers in completing a scorecard questionnaire is expected to take under 30 minutes, although additional time of no more than 20 hours may be needed to assemble information necessary to be able to answer the questions, leading to a total burden of approximately 2,050 hours in the first year. Assembling information to update questionnaire answers in future years on a voluntary basis would be expected to take less time, on the order of 10 hours, as much of any necessary time and effort needed to research information would have been completed previously; (5) *Type of Respondents:* Public; (6) *Annual Estimated Number of Respondents:* 100; (7) *Annual Estimated Number of Total Responses:* 100; (8) *Annual Estimated Number of Burden Hours:* 2,050; (9) *Annual Estimated Reporting and Recordkeeping Cost Burden:* There is no cost associated with reporting and recordkeeping.

Statutory Authority: 42 U.S.C. Sec. 13233; 42 U.S.C. Sec. 13252(a)–(b); 42 U.S.C. 13255.

Issued in Washington, DC, on June 20, 2012.

Patrick B. Davis,

Program Manager, Vehicle Technologies Program, Energy Efficiency and Renewable Energy.

[FR Doc. 2012–16455 Filed 7–3–12; 8:45 am]

BILLING CODE 6450–01–P

DEPARTMENT OF ENERGY

Federal Energy Regulatory Commission

[Docket No. IC12–11–000]

Commission Information Collection Activities (FERC–725); Comment Request

AGENCY: Federal Energy Regulatory Commission, DOE.

ACTION: Comment request.

SUMMARY: In compliance with the requirements of the Paperwork Reduction Act of 1995, the Federal Energy Regulatory Commission (Commission or FERC) is submitting the information collection FERC–725, Certification of Electric Reliability Organization; Procedures for Electric Reliability Standards, to the Office of Management and Budget (OMB) for review of the information collection requirements. Any interested person may file comments directly with OMB and should address a copy of those comments to the Commission as explained below. The Commission issued a Notice in the **Federal Register** (77 FR 24189, 04/23/2012) requesting public comments. FERC received no comments on the FERC–725 and is noting this in its submittal to OMB.

DATES: Comments on the collection of information are due by August 6, 2012.

ADDRESSES: Comments filed with OMB, identified by the OMB Control No. 1902–0225, should be sent via email to the Office of Information and Regulatory Affairs: *oira_submission@omb.gov*. Attention: Federal Energy Regulatory Commission Desk Officer. The Desk Officer may also be reached via telephone at 202–395–4718.

A copy of the comments should also be sent to the Federal Energy Regulatory Commission, identified by the Docket No. IC12–11–000, by either of the following methods:

- *eFiling at Commission's Web Site: http://www.ferc.gov/docs-filing/efiling.asp.*
- *Mail/Hand Delivery/Courier:* Federal Energy Regulatory Commission, Secretary of the Commission, 888 First Street NE., Washington, DC 20426.

Instructions: All submissions must be formatted and filed in accordance with submission guidelines at: *http://www.ferc.gov/help/submission-guide.asp*. For user assistance contact FERC Online Support by email at *ferconlinesupport@ferc.gov,* or by phone at: (866) 208–3676 (toll-free), or (202) 502–8659 for TTY.

Docket: Users interested in receiving automatic notification of activity in this

docket or in viewing/downloading comments and issuances in this docket may do so at *http://www.ferc.gov/docs-filing/docs-filing.asp*.

FOR FURTHER INFORMATION CONTACT: Ellen Brown may be reached by email at *DataClearance@FERC.gov,* by telephone at (202) 502–8663, and by fax at (202) 273–0873.

SUPPLEMENTARY INFORMATION:

Title: FERC–725, Certification of Electric Reliability Organization; Procedures for Electric Reliability Standards.

OMB Control No.: 1902–0225.

Type of Request: Three-year extension of the FERC–725 information collection requirements with no changes to the reporting requirements.

Abstract: The Commission uses the information collected under the requirements of FERC–725 to implement the statutory provisions of Section 215 of the Federal Power Act (FPA).[1]

Section 215 [1] of the FPA aids the Commission's efforts to strengthen the reliability of the interstate grid through the granting of new authority to provide for a system of mandatory Reliability Standards developed by the Electric Reliability Organization (ERO) [2] and reviewed and approved by FERC.

On February 3, 2006, the Commission issued Order No.672 [3] certifying a single ERO [the North American Electric Reliability Corporation (NERC)], to oversee the reliability of the United States' portion of the interconnected North American Bulk-Power System, subject to Commission oversight. The ERO is responsible for developing and enforcing the mandatory Reliability Standards. The Reliability Standards apply to all users, owners and operators of the Bulk-Power System. The Commission has the authority to approve all ERO actions, to order the ERO to carry out its responsibilities under these statutory provisions, and (as appropriate) to enforce Reliability Standards.

The ERO can delegate its enforcement responsibilities to a Regional Entity. Delegation is effective only after the Commission approves the delegation agreement. A Regional Entity can also propose a Reliability Standard to the ERO for submission to the Commission for approval.

The FERC–725 contains the following information collection elements:

Self Assessment and ERO Application: The Commission requires the ERO to submit to FERC a performance assessment report every five years. Each of regional entity submits a performance assessment report to the ERO. Submitting an application to become an ERO is also part of this collection.[4]

Reliability Assessments: 18 CFR 39.11 requires the ERO to assess the reliability and adequacy of the Bulk-Power System in North America. Subsequently, the ERO must report to the Commission on its findings. Regional entities perform similar assessments within individual regions.

Reliability Compliance: Reliability Standards are mandatory and enforceable. In addition to the specific information collection requirements contained in each standard, there are general compliance, monitoring and enforcement information collection requirements imposed on applicable entities. Audits, spot checks, self-certifications, exception data submittals, violation reporting, and mitigation plan confirmation are included in this area.

Stakeholder Survey: The ERO used a stakeholder survey to solicit feedback from registered entities in preparation for its three year performance assessment. The Commission assumes that the ERO will perform another survey prior to the 2014 performance assessment.

Other Reporting: This category refers to all other reporting requirements imposed on the ERO or regional entities in order to comply with the Commission's regulations.

The Commission implements its responsibilities through the Code of Federal Regulations in 18 CFR part 39.

Type of Respondents: Electric reliability organization, regional entities, and registered entities.

Estimate of Annual Burden: [5] The Commission estimates the total public reporting burden for this information collection as:

FERC–725: CERTIFICATION OF THE ERO [4]; PROCEDURES FOR ELECTRIC RELIABILITY STANDARDS

Type of respondent	Type of reporting requirement [4]	Number of respondents (A)	Number of responses per respondent (B) [6]	Total number of responses (A) × (B) = (C)	Average burden hours per response (D)	Estimated total annual burden (C) × (D)
Electric Reliability Organization (ERO).	Self-Assessment ..	.....	0.33	0.33	10,400	3,432
	Reliability Assessments.	.....	11	11	3,120	34,320
	Reliability Compliance.	.....	1	1	76,837	76,837
	Standards Development.	.....	1	1	51,834	51,834
	Other Reporting ...	1	1	1	2,080	2,080
Regional Entities ..	Self-Assessment ..	.....	0.33	2.64	16,640	43,930
	Reliability Assessments.	.....	1	8	16,679	133,432
	Reliability Compliance.	.....	1	8	46,788	374,304

[1] Section 215 was added by the Energy Policy Act of 2005, Public Law. 109–58, 119 Stat. 594 (2005) (codified at 16 U.S.C. 824o).

[2] Section 215 defines ''Electric Reliability Organization'' or ''ERO'' to mean the organization certified by the Commission * * * the purpose of which is to establish and enforce reliability standards for the bulk-power system, subject to Commission review.

[3] Rules Concerning Certification of the Electric Reliability Organization; and Procedures for the Establishment, Approval, and Enforcement of Electric Reliability Standards ¶ 31,204 71 FR 8662 (2006) *Order on rehearing,* 71 FR 19,814 (2006), FERC Statutes and Regulations ¶ 31,212 (2006).

[4] The Commission does not expect any new ERO applications to be submitted in the next three years and is not including any burden for this requirement in the burden estimate.

[5] Burden is defined as the total time, effort, or financial resources expended by persons to generate, maintain, retain, or disclose or provide information to or for a Federal agency. For further explanation of what is included in the information collection burden, reference 5 Code of Federal Regulations 1320.3.

FERC–725: CERTIFICATION OF THE ERO [4]; PROCEDURES FOR ELECTRIC RELIABILITY STANDARDS—Continued

Type of respondent	Type of reporting requirement [4]	Number of respondents (A)	Number of responses per respondent (B) [6]	Total number of responses (A) × (B) = (C)	Average burden hours per response (D)	Estimated total annual burden (C) × (D)
Registered Entities	Standards Development.	.....	1	8	[a] 4,142	33,134
	Other Reporting ...	8	1	8	1,040	8,320
	Stakeholder Survey.	.....	0.33	537	4	2,148
	Reliability Compliance.	1,627	1	1,627	[a] 483	786,342
Subtotals:						
ERO	N/A [7]					168,503
Regional						593,120
Registered						788,490
Total	.....	1,636	N/A [7]	N/A [7]	N/A [7]	1,550,113

[a] Rounded.

The Commission derived the figures above using NERC's Business Plan and Budget Submissions, NERC's Compliance, Enforcement and Monitoring Plans, NERC's Performance Assessments, other information on NERC's Web site (*http://www.nerc.com/*), and internal FERC staff estimates. See the appendix for more details regarding the burden estimates.[8]

The total estimated annual cost burden to respondents is $115,655,020 ($15,128,199 + $46,121,011 + $54,405,810).

ERO Cost: 168,503 hours @ $89.78/hr = $15,128,199.

Regional Entity Cost: 593,120 hours @ $77.76/hr = $46,121,011.

Registered Entity Cost: 788,490 hours @ $69/hr = $54,405,810.

The hourly cost figures are loaded (i.e. includes salary and other personnel costs). The Commission used NERC's 2012 Business Plan and internal FERC salary estimates for these cost figures.

Comments: Comments are invited on: (1) Whether the collection of information is necessary for the proper performance of the functions of the Commission, including whether the information will have practical utility; (2) the accuracy of the agency's estimate of the burden and cost of the collection of information, including the validity of the methodology and assumptions used; (3) ways to enhance the quality, utility and clarity of the information collection; and (4) ways to minimize the burden of the collection of information on those who are to respond, including the use of automated collection techniques or other forms of information technology.

Dated: June 27, 2012.

Kimberly D. Bose,

Secretary.

[FR Doc. 2012–16369 Filed 7–3–12; 8:45 am]

BILLING CODE 6717–01–P

[6] In all instances below where the number of responses per respondent is ''1'' the Commission acknowledges that actual number of responses varies and cannot be estimated clearly.

[7] N/A = not applicable.

[8] The appendix will not be published in the **Federal Register**. The appendix is available in FERC's eLibrary system under the notice issuance in Docket No. IC12–11–000.

DEPARTMENT OF ENERGY

Federal Energy Regulatory Commission

[Project No. 14395–000]

Natural Currents Energy Services, LLC; Notice of Preliminary Permit Application Accepted for Filing and Soliciting Comments, Motions To Intervene, and Competing Applications

On April 24, 2012, Natural Currents Energy Services, LLC filed an application, pursuant to section 4(f) of the Federal Power Act, proposing to study the feasibility of the Fisher's Island Tidal Energy Project, which would be located on the Long Island Sound in Suffolk County, New York. The proposed project would not use a dam or impoundment. The sole purpose of a preliminary permit, if issued, is to grant the permit holder priority to file a license application during the permit term. A preliminary permit does not authorize the permit holder to perform any land-disturbing activities or otherwise enter upon lands or waters owned by others without the owners' express permission.

The proposed project would consist of: (1) Installation of 50 NC Sea Dragon tidal turbines at a rated capacity of 100 kilowatts, (2) an estimated 12.6 kilometers in length of additional transmission infrastructure, and (3) appurtenant facilities. Initial estimated production would be a minimum of 17,520 megawatt hours per year with the installation of 50 units.

Applicant Contact: Mr. Roger Bason, Natural Currents Energy Services, LLC, 24 Roxanne Boulevard, Highland, New York 12561, (845) 691–4009.

FERC Contact: Woohee Choi (202) 502–6336.

Deadline for filing comments, motions to intervene, competing applications (without notices of intent), or notices of intent to file competing applications: 60 days from the issuance of this notice. Competing applications and notices of intent must meet the requirements of 18 CFR 4.36. Comments, motions to intervene, notices of intent, and competing applications may be filed electronically via the Internet. See 18 CFR 385.2001(a)(1)(iii) and the instructions on the Commission's Web site *http://www.ferc.gov/docs-filing/efiling.asp.* Commenters can submit brief comments up to 6,000 characters, without prior registration, using the eComment system at *http://www.ferc.gov/docs-filing/ecomment.asp.* You must include your name and contact information at the end of your comments. For assistance, please contact FERC Online Support at *FERCOnlineSupport@ferc.gov* or toll free at 1–866–208–3676, or for TTY, (202) 502–8659. Although the Commission strongly encourages

electronic filing, documents may also be paper-filed. To paper-file, mail an original and seven copies to: Kimberly D. Bose, Secretary, Federal Energy Regulatory Commission, 888 First Street NE., Washington, DC 20426.

More information about this project, including a copy of the application, can be viewed or printed on the ''eLibrary'' link of the Commission's Web site at *http://www.ferc.gov/docs-filing/elibrary.asp.* Enter the docket number (P–14395) in the docket number field to access the document. For assistance, contact FERC Online Support.

Dated: June 27, 2012.

Kimberly D. Bose,

Secretary.

[FR Doc. 2012–16368 Filed 7–3–12; 8:45 am]

BILLING CODE 6717–01–P

DEPARTMENT OF ENERGY

Federal Energy Regulatory Commission

[Docket No. DI12–5–000]

National Currents Energy Services, LLC; Notice of Declaration of Intention and Petition for Relief, and Soliciting Comments, Protests, and/or Motions To Intervene

Take notice that the following application has been filed with the Commission and is available for public inspection:

a. *Application Type:* Declaration of Intention.

b. *Docket No.:* DI12–5–000.

c. *Date Filed:* March 29, 2012.

d. *Applicant:* National Currents Energy Services, LLC.

e. *Name of Project:* Wards Island Tidal Energy Project.

f. *Location:* The proposed Wards Island Tidal Energy Project will be located off the south shore of Wards Island, in the Hell Gate Waterway near the junction of the Harlem River, East River, and Long Island Sound in the Borough of Manhattan, New York City, NY.

g. *Filed Pursuant to:* 18 CFR part 24, section 24.1.

h. *Applicant Contact:* Roger Bason, President, National Currents Energy Services, LLC, 24 Roxanne Blvd., Highland, NY 12528; telephone: (845) 691–4008; email: *www.rbason@naturalcurrents.com.*

i. *FERC Contact:* Any questions on this notice should be addressed to Henry Ecton, (202) 502–8768, or Email address: *henry.ecton@ferc.gov.*

j. *Deadline for filing comments, protests, and/or motions:* July 27, 2012.

Comments, protests, and motions to intervene may be filed electronically via the Internet. See 18 CFR 385.2001(a)(l)(iii) and the instructions on the Commission's Web site under the ''eFiling'' link. If unable to be filed electronically, documents may be paper-filed. To paper-file, an original and eight copies should be mailed to: Kimberly D. Bose, Secretary, Federal Energy Regulatory Commission, 888 First Street NE., Washington, DC 20426. For more information on how to submit these types of filings, please go to the Commission's Web site located at *http://www.ferc.gov/filing-comments.asp.* Please include the docket number (DI12–5–000) on any comments, protests, and/or motions filed.

k. *Description of Project:* The proposed Wards Island Tidal Energy Project would consist of: (1) A 15-meter-long, 1.6-meter-diameter vessel mounted 150-kW Natural Currents Sea Dragon Tidal Turbine; (2) a vessel-based deployment Principal Project Works or Structural Support system; (3) six 40-foot-long steel support pilings; (4) a 50-meter-long subsea transmission line connecting to an electrical cabinet owned by the City of New York; and (5) appurtenant facilities.

l. *Petition for Declaration of Intention:* National Currents Energy Services, LLC asks that it be allowed, for a limited time, to deploy, test, and demonstrate the durability of the technology without obtaining a license under part I of the Federal Power Act. The project purpose is for scientific research, public education, and training. The experimental hydrokinetic turbine generator will be tested to determine its durability. The power produced by the project will be used for off-grid demonstration of innovative uses.

m. *Locations of the Application:* Copies of this filing are on file with the Commission and are available for public inspection. This filing may be viewed on the Web at *http://www.ferc.gov* using the ''eLibrary'' link. Enter the Docket number excluding the last three digits in the docket number field to access the document. You may also register online at *http://www.ferc.gov/docs-filing/esubscription.asp* to be notified via email of new filings and issuances related to this or other pending projects. For assistance, call 1–866–208–3676 or email *FERCOnlineSupport@ferc.gov;* for TTY, call (202) 502–8659. A copy is also available for inspection and reproduction at the address in item (h) above.

n. Individuals desiring to be included on the Commission's mailing list should so indicate by writing to the Secretary of the Commission.

o. *Comments, Protests, or Motions to Intervene*—Anyone may submit comments, a protest, or a motion to intervene in accordance with the requirements of Rules of Practice and Procedure, 18 CFR 385.210, .211, .214. In determining the appropriate action to take, the Commission will consider all protests or other comments filed, but only those who file a motion to intervene in accordance with the Commission's Rules may become a party to the proceeding. Any comments, protests, or motions to intervene must be received on or before the specified comment date for the particular application.

p. *Filing and Service of Responsive Documents*—All filings must bear in all capital letters the title ''COMMENTS'', ''PROTESTS'', AND/OR ''MOTIONS TO INTERVENE'', as applicable, and the Docket Number of the particular application to which the filing refers. A copy of any Motion to Intervene must also be served upon each representative of the Applicant specified in the particular application.

q. *Agency Comments*—Federal, state, and local agencies are invited to file comments on the described application. A copy of the application may be obtained by agencies directly from the Applicant. If an agency does not file comments within the time specified for filing comments, it will be presumed to have no comments. One copy of an agency's comments must also be sent to the Applicant's representatives.

Dated: June 27, 2012.

Kimberly D. Bose,

Secretary.

[FR Doc. 2012–16364 Filed 7–3–12; 8:45 am]

BILLING CODE 6717–01–P

DEPARTMENT OF ENERGY

Federal Energy Regulatory Commission

Combined Notice of Filings #1

Take notice that the Commission received the following electric rate filings:

Docket Numbers: ER10–1894–004; ER10–1901–005; ER10–1882–001; ER10–3025–001; ER10–3036–001; ER10–3039–001; ER10–3042–001.

Applicants: Wisconsin Public Service Corporation, Upper Peninsula Power Company, Integrys Energy Services, Inc., Wisconsin River Power Company, Quest Energy, LLC, WPS Power Development, LLC, Combined Locks Energy Center, LLC.

Description: The Integrys Energy Group submits Updated Market Analysis for their market based rate authority in the Central Region.
Filed Date: 6/26/12.
Accession Number: 20120626–5146.
Comments Due: 5 p.m. ET 8/27/12.

Docket Numbers: ER10–2839–001.
Applicants: Midland Cogeneration Venture Limited Partnership.
Description: Updated Market Power Analysis of Midland Cogeneration Venture Limited Partnership.
Filed Date: 6/27/12.
Accession Number: 20120627–5061.
Comments Due: 5 p.m. ET 8/27/12.

Docket Numbers: ER12–1803–001.
Applicants: Cleco Power LLC.
Description: Compliance Filing to be effective 5/14/2012.
Filed Date: 6/27/12.
Accession Number: 20120627–5034.
Comments Due: 5 p.m. ET 7/18/12.

Docket Numbers: ER12–2071–002.
Applicants: Verde Energy USA New York, LLC.
Description: Revised Amended MBR Filing to be effective 8/20/2012.
Filed Date: 6/27/12.
Accession Number: 20120627–5029.
Comments Due: 5 p.m. ET 7/18/12.

Docket Numbers: ER12–2112–000.
Applicants: ISO New England Inc.
Description: ISO New England Inc. Informational Filing Related to the Peak Energy Rent Feature of the Forward Capacity Market.
Filed Date: 6/26/12.
Accession Number: 20120626–5161.
Comments Due: 5 p.m. ET 7/17/12.

Docket Numbers: ER12–2113–000.
Applicants: Hess Small Business Services LLC.
Description: Market-Based Rate Tariff Revisions to be effective 6/28/2012.
Filed Date: 6/27/12.
Accession Number: 20120627–5066.
Comments Due: 5 p.m. ET 7/18/12.

Docket Numbers: ER12–2114–000.
Applicants: Carolina Power & Light Company.
Description: Rate Schedule No. 184 of Carolina Power and Light Company to be effective 7/1/2012.
Filed Date: 6/27/12.
Accession Number: 20120627–5072.
Comments Due: 5 p.m. ET 7/18/12.

The filings are accessible in the Commission's eLibrary system by clicking on the links or querying the docket number.

Any person desiring to intervene or protest in any of the above proceedings must file in accordance with Rules 211 and 214 of the Commission's Regulations (18 CFR 385.211 and 385.214) on or before 5 p.m. Eastern time on the specified comment date. Protests may be considered, but intervention is necessary to become a party to the proceeding.

eFiling is encouraged. More detailed information relating to filing requirements, interventions, protests, service, and qualifying facilities filings can be found at: *http://www.ferc.gov/docs-filing/efiling/filing-req.pdf.* For other information, call (866) 208–3676 (toll free). For TTY, call (202) 502–8659.

Dated: June 27, 2012.

Nathaniel J. Davis, Sr.,

Deputy Secretary.

[FR Doc. 2012–16386 Filed 7–3–12; 8:45 am]

BILLING CODE 6717–01–P

DEPARTMENT OF ENERGY

Federal Energy Regulatory Commission

[Docket No. OR12–21–000]

HollyFrontier Refining and Marketing LLC v. Osage Pipe Line Company, LLC; Notice of Complaint

Take notice that on June 25, 2012, pursuant to section 13(1) of the Interstate Commerce Act (ICA); 49 U.S.C. App. § 13(1), Rule 206 of the Rules of Practice and Procedure of the Federal Energy Regulatory Commission (Commission); 18 CFR 385.206 (2011), and the Commission's Procedural Rules Applicable to Oil Pipeline Proceedings; 18 CFR 343.1(a) and 343.2(c), HollyFrontier Refining and Marketing LLC (Complainant) filed a formal complaint against Osage Pipe Line Company, LLC (Respondent) alleging that the Respondent has violated the ICA by charging unjust and unreasonable rates for Respondent's interstate transportation service, as set forth more fully in the Complaint.

The Complainant states that a copy of the Complaint has been served on the contact for the Respondent as listed on the Commission list of Corporate Officials.

Any person desiring to intervene or to protest this filing must file in accordance with Rules 211 and 214 of the Commission's Rules of Practice and Procedure (18 CFR 385.211, 385.214). Protests will be considered by the Commission in determining the appropriate action to be taken, but will not serve to make protestants parties to the proceeding. Any person wishing to become a party must file a notice of intervention or motion to intervene, as appropriate. The Respondent's answer and all interventions, or protests must be filed on or before the comment date. The Respondent's answer, motions to intervene, and protests must be served on the Complainants.

The Commission encourages electronic submission of protests and interventions in lieu of paper using the ''eFiling'' link at *http://www.ferc.gov.* Persons unable to file electronically should submit an original and 14 copies of the protest or intervention to the Federal Energy Regulatory Commission, 888 First Street NE., Washington, DC 20426.

This filing is accessible on-line at *http://www.ferc.gov,* using the ''eLibrary'' link and is available for review in the Commission's Public Reference Room in Washington, DC. There is an ''eSubscription'' link on the Web site that enables subscribers to receive email notification when a document is added to a subscribed docket(s). For assistance with any FERC Online service, please email *FERCOnlineSupport@ferc.gov,* or call (866) 208–3676 (toll free). For TTY, call (202) 502–8659.

Comment Date: 5 p.m. Eastern Time on July 16, 2012.

Dated: June 26, 2012.

Kimberly D. Bose,

Secretary.

[FR Doc. 2012–16366 Filed 7–3–12; 8:45 am]

BILLING CODE 6717–01–P

DEPARTMENT OF ENERGY

Federal Energy Regulatory Commission

[Project Nos. 1975–102 and 2061–086]

Idaho Power Company; Notice of Availability of Draft Environmental Assessment

In accordance with the National Environmental Policy Act of 1969 and the Federal Energy Regulatory Commission's (Commission or FERC) regulations, 18 CFR part 380, Commission staff has reviewed the applications for amendment of the licenses for the Bliss Project (FERC No. 1975) and Lower Salmon Falls Project (FERC No. 2061) and has prepared a Draft Environmental Assessment. The projects are located on the Snake River in Gooding, Twin Falls, and Elmore Counties, Idaho. Both projects occupy lands managed by the Bureau of Land Management. The Lower Salmon Falls Project also occupies lands within the Hagerman Fossil Beds National Monument managed by the National Park Service.

The Draft Environmental Assessment contains the Commission staff's analysis

of the potential environmental effects of the proposed change from run-of-river to load-following operations of the projects and concludes that authorizing the amendments, with appropriate environmental protective measures would not constitute a major federal action that would significantly affect the quality of the human environment.

A copy of the Draft Environmental Assessment is available for review at the Commission in the Public Reference Room or may be viewed on the Commission's Web site at *http://www.ferc.gov* using the ''eLibrary'' link. Enter the docket number excluding the last three digits in the docket number field to access the document. For assistance, contact FERC Online Support at *FERCOnlineSupport@ferc.gov* or toll-free at (866) 208–3676, or for TTY contact (202) 502–8695.

Any comments should be filed within 30 days from the date of this notice. Comments may be filed electronically via the Internet. See 18 CFR 385.2001(a)(1)(iii) and the instructions on the Commission's Web site at *http://www.ferc.gov/docs-filing/efiling.asp*. For assistance, please contact FERC Online Support. Although the Commission strongly encourages electronic filing, documents may also be paper-filed. To paper-file, mail an original and seven copies to: Kimberly D. Bose, Secretary, Federal Energy Regulatory Commission, 888 First Street NE., Washington, DC 20426. All comments must include the docket numbers P–1975–102 and P–2061–086.

For further information, contact Rachel Price by telephone at 202–502–8907 or by email at *Rachel.Price@ferc.gov.*

Dated: June 26, 2012.

Kimberly D. Bose,

Secretary.

[FR Doc. 2012–16367 Filed 7–3–12; 8:45 am]

BILLING CODE 6717–01–P

DEPARTMENT OF ENERGY

Federal Energy Regulatory Commission

[Docket No. CP12–468–000]

Atlas Pipeline Mid-Continent WestTex, LLC; Pioneer Natural Resources USA, Inc.; Notice of Intent To Prepare an Environmental Assessment for the Proposed Driver Residue Pipeline Project and Request for Comments on Environmental Issues

The staff of the Federal Energy Regulatory Commission (FERC or Commission) will prepare an environmental assessment (EA) that will discuss the environmental impacts of the Driver Residue Pipeline Project involving construction and operation of facilities by Atlas Pipeline Mid-Continent WestTex, LLC and Pioneer Natural Resources USA, Inc. (Atlas and Pioneer), as joint applicants, in Midland County, Texas. The Commission will use this EA in its decision-making process to determine whether the project is in the public convenience and necessity.

This notice announces the opening of the scoping process the Commission will use to gather input from the public and interested agencies on the project. Your input will help the Commission staff determine what issues they need to evaluate in the EA. Please note that the scoping period will close on July 27, 2012.

This notice is being sent to the Commission's current environmental mailing list for this project. State and local government representatives should notify their constituents of this proposed project and encourage them to comment on their areas of concern.

If you are a landowner receiving this notice, a pipeline company representative may contact you about the acquisition of an easement to construct, operate, and maintain the proposed facilities. The company would seek to negotiate a mutually acceptable agreement. However, if the Commission approves the project, that approval conveys with it the right of eminent domain. Therefore, if easement negotiations fail to produce an agreement, the pipeline company could initiate condemnation proceedings where compensation would be determined in accordance with state law.

Atlas and Pioneer provided landowners with a fact sheet prepared by the FERC entitled ''An Interstate Natural Gas Facility On My Land? What Do I Need To Know?''. This fact sheet addresses a number of typically-asked questions, including the use of eminent domain and how to participate in the Commission's proceedings. It is also available for viewing on the FERC Web site (*www.ferc.gov*).

Summary of the Proposed Project

Atlas and Pioneer propose to construct and operate 10.2 miles of 16-inch-diameter pipeline in Midland County, Texas. According to Atlas and Pioneer, increased natural gas production in the Permian Basin has brought about the need for additional natural gas processing facilities including the facilities to deliver residue gas to downstream markets from the Driver Plant that is presently under construction. The Driver Residue Pipeline Project would provide access to markets via two intrastate and one interstate natural gas pipeline systems for approximately 150 million standard cubic feet of natural gas per day.

The Driver Residue Pipeline Project would consist of the following facilities:

- Construction of 10.2 miles of 16-inch-diameter pipeline and appurtenant facilities between the Driver Plant and interconnections with Atmos Energy Corporation, Northern Natural Gas Company, and Enterprise Products Partners, LP.
- Installation of a pig launcher [1] east of the Driver Plant at the south end of the proposed pipeline at milepost (MP) 0.0, and a pig receiver at the north end at MP 10.2.
- Installation of about 40 feet of 6-inch-diameter pipeline to connect the proposed pipeline to the existing Atlas/Pioneer Shackleford Station near MP 8.3.

The general location of the project facilities is shown in appendix 1.[2]

Land Requirements for Construction

Construction of the proposed facilities would disturb about 93.4 acres of land. Following construction, Atlas and Pioneer would maintain about 39.7 acres for permanent operation of the project's facilities; the remaining acreage would be restored and revert to former uses. The proposed pipeline would be installed using a 75-foot-wide construction right-of-way, of which a 30-foot-wide strip would remain as permanent right-of-way. The proposed pipeline route parallels existing pipeline rights-of-way.

The EA Process

The National Environmental Policy Act (NEPA) requires the Commission to take into account the environmental impacts that could result from an action whenever it considers the issuance of a Certificate of Public Convenience and Necessity. NEPA also requires us [3] to discover and address concerns the

---

[1] A ''pig'' is a tool that the pipeline company inserts into and pushes through the pipeline for cleaning the pipeline, conducting internal inspections, or other purposes.

[2] The appendices referenced in this notice will not appear in the **Federal Register**. Copies of appendices were sent to all those receiving this notice in the mail and are available at *www.ferc.gov* using the link called ''eLibrary'' or from the Commission's Public Reference Room, 888 First Street NE., Washington, DC 20426, or call (202) 502–8371. For instructions on connecting to eLibrary, refer to the last page of this notice.

[3] ''We,'' ''us,'' and ''our'' refer to the environmental staff of the Commission's Office of Energy Projects.

public may have about proposals. This process is referred to as ''scoping.'' The main goal of the scoping process is to focus the analysis in the EA on the important environmental issues. By this notice, the Commission requests public comments on the scope of the issues to address in the EA. We will consider all filed comments during the preparation of the EA.

In the EA we will discuss impacts that could occur as a result of the construction and operation of the proposed project under these general headings:

- Geology and soils;
- Land use;
- Water resources, fisheries, and wetlands;
- Cultural resources;
- Vegetation and wildlife;
- Air quality and noise;
- Endangered and threatened species;
- Public safety; and
- Cumulative impacts

We will also evaluate reasonable alternatives to the proposed project or portions of the project, and make recommendations on how to lessen or avoid impacts on the various resource areas.

The EA will present our independent analysis of the issues. The EA will be available in the public record through eLibrary. Depending on the comments received during the scoping process, we may also publish and distribute the EA to the public for an allotted comment period. We will consider all comments on the EA before making our recommendations to the Commission. To ensure we have the opportunity to consider and address your comments, please carefully follow the instructions in the Public Participation section below.

With this notice, we are asking agencies with jurisdiction by law and/or special expertise with respect to the environmental issues of this project to formally cooperate with us in the preparation of the EA.[4] Agencies that would like to request cooperating agency status should follow the instructions for filing comments provided under the Public Participation section of this notice.

Consultations Under Section 106 of the National Historic Preservation Act

In accordance with the Advisory Council on Historic Preservation's implementing regulations for section 106 of the National Historic Preservation Act, we are using this notice to initiate consultation with applicable State Historic Preservation Office (SHPO), and to solicit its views and those of other government agencies, interested Indian tribes, and the public on the project's potential effects on historic properties.[5] We will define the project-specific Area of Potential Effects (APE) in consultation with the SHPO as the project develops. On natural gas facility projects, the APE at a minimum encompasses all areas subject to ground disturbance (examples include construction right-of-way, contractor/pipe storage yards, compressor stations, and access roads). Our EAS for this project will document our findings on the impacts on historic properties and summarize the status of consultations under section 106.

Public Participation

You can make a difference by providing us with your specific comments or concerns about the project. Your comments should focus on the potential environmental effects, reasonable alternatives, and measures to avoid or lessen environmental impacts. The more specific your comments, the more useful they will be. To ensure that your comments are timely and properly recorded, please send your comments so that the Commission receives them in Washington, DC on or before July 27, 2012.

For your convenience, there are three methods which you can use to submit your comments to the Commission. In all instances please reference the project docket number (CP12–468) with your submission. The Commission encourages electronic filing of comments and has expert staff available to assist you at (202) 502–8258 or *efiling@ferc.gov*.

(1) You can file your comments electronically using the eComment feature on the Commission's Web site (*www.ferc.gov*) under the link to Documents and Filings. This is an easy method for interested persons to submit brief, text-only comments on a project;

(2) You can file your comments electronically using the eFiling feature on the Commission's Web site (*www.ferc.gov*) under the link to Documents and Filings. With eFiling, you can provide comments in a variety of formats by attaching them as a file with your submission. New eFiling users must first create an account by clicking on ''eRegister.'' You must select the type of filing you are making. If you are filing a comment on a particular project, please select ''Comment on a Filing''; or

(3) You can file a paper copy of your comments by mailing them to the following address: Kimberly D. Bose, Secretary, Federal Energy Regulatory Commission, 888 First Street NE., Room 1A, Washington, DC 20426.

Environmental Mailing List

The environmental mailing list includes federal, state, and local government representatives and agencies; elected officials; Native American Tribes; and local libraries and newspapers. This list also includes all affected landowners (as defined in the Commission's regulations) who are potential right-of-way grantors, whose property may be used temporarily for project purposes, or who own homes within certain distances of aboveground facilities, and anyone who submits comments on the project. We will update the environmental mailing list as the analysis proceeds to ensure that we send the information related to this environmental review to all individuals, organizations, and government entities interested in and/or potentially affected by the proposed project.

If we publish and distribute the EA, copies will be sent to the environmental mailing list for public review and comment. If you would prefer to receive a paper copy of the document instead of the CD version or would like to remove your name from the mailing list, please return the attached Information Request (appendix 2).

Becoming an Intervenor

In addition to involvement in the EA scoping process, you may want to become an ''intervenor'' which is an official party to the Commission's proceeding. Intervenors play a more formal role in the process and are able to file briefs, appear at hearings, and be heard by the courts if they choose to appeal the Commission's final ruling. An intervenor formally participates in the proceeding by filing a request to intervene. Instructions for becoming an intervenor are in the User's Guide under the ''e-filing'' link on the Commission's Web site.

Additional Information

Additional information about the project is available from the Commission's Office of External Affairs, at (866) 208–FERC, or on the FERC Web site at *www.ferc.gov* using the ''eLibrary'' link. Click on the eLibrary

[4] The Council on Environmental Quality regulations addressing cooperating agency responsibilities are at Title 40, Code of Federal Regulations, § 1501.6.

[5] The Advisory Council on Historic Preservation's regulations are at Title 36, Code of Federal Regulations, Part 800. Those regulations define historic properties as any prehistoric or historic district, site, building, structure, or object included in or eligible for inclusion in the National Register of Historic Places.

link, click on ''General Search'' and enter the docket number, excluding the last three digits in the Docket Number field (i.e., CP12–468). Be sure you have selected an appropriate date range. For assistance, please contact FERC Online Support at *FercOnlineSupport@ferc.gov* or toll free at (866) 208–3676, or for TTY, contact (202) 502–8659. The eLibrary link also provides access to the texts of formal documents issued by the Commission, such as orders, notices, and rulemakings.

In addition, the Commission now offers a free service called eSubscription which allows you to keep track of all formal issuances and submittals in specific dockets. This can reduce the amount of time you spend researching proceedings by automatically providing you with notification of these filings, document summaries, and direct links to the documents. Go to *www.ferc.gov/esubscribenow.htm.*

Finally, public meetings or site visits will be posted on the Commission's calendar located at *www.ferc.gov/EventCalendar/EventsList.aspx* along with other related information.

Dated: June 27, 2012.

Kimberly D. Bose,

Secretary.

[FR Doc. 2012–16370 Filed 7–3–12; 8:45 am]

BILLING CODE 6717–01–P

DEPARTMENT OF ENERGY

Federal Energy Regulatory Commission

[Docket No. RM98–1–000]

Records Governing Off-the-Record Communications; Public Notice

This constitutes notice, in accordance with 18 CFR 385.2201(b), of the receipt of prohibited and exempt off-the-record communications.

Order No. 607 (64 FR 51222, September 22, 1999) requires Commission decisional employees, who make or receive a prohibited or exempt off-the-record communication relevant to the merits of a contested proceeding, to deliver to the Secretary of the Commission, a copy of the communication, if written, or a summary of the substance of any oral communication.

Prohibited communications are included in a public, non-decisional file associated with, but not a part of, the decisional record of the proceeding. Unless the Commission determines that the prohibited communication and any responses thereto should become a part of the decisional record, the prohibited off-the-record communication will not be considered by the Commission in reaching its decision. Parties to a proceeding may seek the opportunity to respond to any facts or contentions made in a prohibited off-the-record communication, and may request that the Commission place the prohibited communication and responses thereto in the decisional record. The Commission will grant such a request only when it determines that fairness so requires. Any person identified below as having made a prohibited off-the-record communication shall serve the document on all parties listed on the official service list for the applicable proceeding in accordance with Rule 2010, 18 CFR 385.2010.

Exempt off-the-record communications are included in the decisional record of the proceeding, unless the communication was with a cooperating agency as described by 40 CFR 1501.6, made under 18 CFR 385.2201(e)(1)(v).

The following is a list of off-the-record communications recently received by the Secretary of the Commission. The communications listed are grouped by docket numbers in ascending order. These filings are available for review at the Commission in the Public Reference Room or may be viewed on the Commission's Web site at *http://www.ferc.gov* using the eLibrary link. Enter the docket number, excluding the last three digits, in the docket number field to access the document. For assistance, please contact FERC, Online Support at *FERCOnlineSupport@ferc.gov* or toll free at (866)208–3676, or for TTY, contact (202)502–8659.

Docket No.	Communication date	Presenter or requester
Prohibited:		
1. P–2114–000	6–7–12	Tim Culbertson.
2. ER12–1346–000 [1]	6–11–12	Peter Pry.
Exempt:		
1. ER12–1699–000	6–7–12	Hon. Ben Ray Luján.
2. P–14241–000	6–12–12	Hon. Mia Costello.
3. P–12690–005	6–12–12	Craig Trueblood.[2]
4. CP11–72–000	6–13–12	Members of Congress.[3]
5. P–12690–005	6–19–12	Craig Trueblood.[4]
6. CP12–72–000	6–19–12	Mr. and Mrs. G. Heinsohn
7. CP12–11–001	6–21–12	Jason Wallace.
8. CP11–161–000	6–26–12	PA House of Representatives.[5]
9. CP11–56–000	6–26–12	Hon. Nita M. Lowey.
10. CP11–161–000	6–26–12	Robert M. Ewbank.

[1] Pertains to Docket Nos. ER12–1346–000, ER12–1347–001, ER12–1338–000, ER12–1343–000 and ER12–1345–000.
[2] Email record.
[3] Hons. Rodney Alexander, Steve Scalise, John Fleming, Charles Boustany Jr., MD, Bill Cassidy, MD and Jeff Landry.
[4] Email record.
[5] Hons. Rosemary Brown, Michael Peifer and Elisabeth Baker.

Dated: June 28, 2012.

Nathaniel J. Davis, Sr.,

Deputy Secretary.

[FR Doc. 2012–16385 Filed 7–3–12; 8:45 am]

BILLING CODE 6717–01–P

DEPARTMENT OF ENERGY

Federal Energy Regulatory Commission

[Docket No. CP12–476–000]

Transcontinental Gas Pipe Line Company, LLC; Notice of Request Under Blanket Authorization

Take notice that on June 13, 2012, Transcontinental Gas Pipe Line Company, LLC (Transco), Post Office Box 1396, Houston, Texas 77251, filed in Docket No. CP12–476–000, a prior notice request, pursuant to sections 157.205 and 157.216 of the Commission's Regulations under the Natural Gas Act, and Transco's blanket certificate issued in Docket No. CP82–426, for authorization to abandon Transco's Compressor Station 20 in Refugio County, Texas. In addition, Transco states that it will retain an office building and other miscellaneous facilities for use as a field office location at the Station 20 yard. Transco asserts that all other facilities at Station 20 will be abandoned by removal, all as more fully set forth in the application which is on file with the Commission and open to public inspection. The filing may also be viewed on the Web at *http://www.ferc.gov* using the ''eLibrary'' link. Enter the docket number excluding the last three digits in the docket number field to access the document. For assistance, contact FERC at *FERCOnlineSupport@ferc.gov* or call toll-free, (866) 208–3676 or TTY, (202) 502–8659.

Specifically, Transco asserts that the abandonment of Station 20 will have no impact on its pipeline system, nor will the abandonment have any adverse impact on Transco's existing customers. Additionally, Transco states that no customers have been served through Station 20 for several years.

Any questions regarding this Application should be directed to Nan Miksovsky, Transcontinental Gas Pipe Line Company, LLC, P.O. Box 1396, Houston, Texas 77251, or call (713) 215–3422.

Any person may, within 60 days after the issuance of the instant notice by the Commission, file pursuant to Rule 214 of the Commission's Procedural Rules (18 CFR 385.214) a motion to intervene or notice of intervention. Any person filing to intervene or the Commission's staff may, pursuant to section 157.205 of the Commission's Regulations under the NGA (18 CFR 157.205) file a protest to the request. If no protest is filed within the time allowed therefore, the proposed activity shall be deemed to be authorized effective the day after the time allowed for protest. If a protest is filed and not withdrawn within 30 days after the time allowed for filing a protest, the instant request shall be treated as an application for authorization pursuant to section 7 of the NGA.

Persons who wish to comment only on the environmental review of this project should submit an original and two copies of their comments to the Secretary of the Commission. Environmental commenter's will be placed on the Commission's environmental mailing list, will receive copies of the environmental documents, and will be notified of meetings associated with the Commission's environmental review process. Environmental commenter's will not be required to serve copies of filed documents on all other parties. However, the non-party commentary, will not receive copies of all documents filed by other parties or issued by the Commission (except for the mailing of environmental documents issued by the Commission) and will not have the right to seek court review of the Commission's final order.

The Commission strongly encourages electronic filings of comments, protests, and interventions via the internet in lieu of paper. See 18 CFR 385.2001(a)(1)(iii) and the instructions on the Commission's Web site (*www.ferc.gov*) under the ''e-Filing'' link. Persons unable to file electronically should submit an original and 14 copies of the protest or intervention to the Federal Energy Regulatory Commission, 888 First Street NE., Washington, DC 20426.

Dated: June 26, 2012.

Kimberly D. Bose,

Secretary.

[FR Doc. 2012–16365 Filed 7–3–12; 8:45 am]

BILLING CODE 6717–01–P

ENVIRONMENTAL PROTECTION AGENCY

[EPA–HQ–OPP–2011–1036; FRL–9341–3]

Agency Information Collection Activities; Proposed Collection; Comment Request

AGENCY: Environmental Protection Agency (EPA).

ACTION: Notice.

SUMMARY: In compliance with the Paperwork Reduction Act (PRA), this document announces that EPA is planning to submit a new Information Collection Request (ICR) to the Office of Management and Budget (OMB). Before submitting the ICR, titled: ''Soil Fumigant Risk Mitigation'' and identified by EPA ICR No. 2451.01 and OMB Control No. 2070-new to OMB for review and approval, EPA is soliciting comments on specific aspects of the proposed information collection.

DATES: Comments must be received on or before September 4, 2012.

ADDRESSES: Submit your comments, identified by docket identification (ID) number EPA–HQ–OPP–2011–1036, by one of the following methods:

- *Federal eRulemaking Portal: http://www.regulations.gov.* Follow the online instructions for submitting comments. Do not submit electronically any information you consider to be Confidential Business Information (CBI) or other information whose disclosure is restricted by statute.
- *Mail:* OPP Docket, Environmental Protection Agency Docket Center (EPA/DC), Mail Code: 28221T, 1200 Pennsylvania Ave. NW., Washington, DC 20460–0001. In addition, please mail a copy of your comments on the information collection provisions to the Office of Information and Regulatory Affairs, Office of Management and Budget, Attn: Desk Officer for EPA, 725 17th St. NW., Washington, DC 20503.
- *Hand Delivery:* To make special arrangements for hand delivery or delivery of boxed information, please follow the instructions at *http://www.epa.gov/dockets/contacts.htm.*

Additional instructions on commenting or visiting the docket, along with more information about dockets generally, is available at *http://www.epa.gov/dockets.*

FOR FURTHER INFORMATION CONTACT: Amaris Johnson, Field and External Affairs Division (7506P), Office of Pesticide Programs, Environmental Protection Agency, 1200 Pennsylvania Ave. NW., Washington, DC 20460–0001; telephone number: (703) 305–9542; fax number: (703) 308–5884; email address: *johnson.amaris@epa.gov.*

SUPPLEMENTARY INFORMATION:

I. What information is EPA particularly interested in?

Pursuant to section 3506(c)(2)(A) of PRA, EPA specifically solicits comments and information to enable it to:

1. Evaluate whether the proposed collection of information is necessary for the proper performance of the

functions of the Agency, including whether the information will have practical utility.

2. Evaluate the accuracy of the Agency's estimates of the burden of the proposed collection of information, including the validity of the methodology and assumptions used.

3. Enhance the quality, utility, and clarity of the information to be collected.

4. Minimize the burden of the collection of information on those who are to respond, including through the use of appropriate automated electronic, mechanical, or other technological collection techniques or other forms of information technology, e.g., permitting electronic submission of responses. In particular, EPA is requesting comments from very small businesses (those that employ less than 25) on examples of specific additional efforts that EPA could make to reduce the paperwork burden for very small businesses affected by this collection.

II. What information collection activity or ICR does this action apply to?

Affected entities: Entities potentially affected by this ICR are certified applicators and agricultural pesticide handlers, soil fumigant registrants, state and tribal lead agencies, and EPA.

Title: Soil Fumigant Risk Mitigation.

ICR number: EPA ICR No. 2451.01.

OMB control number: OMB Control No. 2070-[new].

ICR status: This ICR is for a new information collection activity. An Agency may not conduct or sponsor, and a person is not required to respond to, a collection of information, unless it displays a currently valid OMB control number. The OMB control numbers for EPA's regulations in title 40 of the Code of Federal Regulations (CFR), after appearing in the **Federal Register** when approved, are listed in 40 CFR part 9, are displayed either by publication in the **Federal Register** or by other appropriate means, such as on the related collection instrument or form, if applicable. The display of OMB control numbers for certain EPA regulations is consolidated in 40 CFR part 9.

Abstract: EPA's Office of Pesticide Programs, under the Office of Chemical Safety and Pollution Prevention, will use the information collected under this ICR to ensure that risk mitigation measures necessary for reregistration eligibility for certain soil fumigant chemicals are adequately implemented. The programs and activities represented in this new ICR are the result of the Agency exercising the authority of section 3(c)(2)(B) of the Federal Insecticide, Fungicide, and Rodenticide Act, which authorizes EPA to require pesticide registrants to generate and submit data to the Agency, when such data are needed to maintain an existing registration of a pesticide. Responses to this collection of information are required to obtain or retain a benefit.

Burden statement: The annual public reporting and recordkeeping burden for this collection of information is estimated to average 4.3 hours per response. Burden is defined in 5 CFR 1320.3(b).

The ICR provides a detailed explanation of this estimate, which is only briefly summarized here:

Estimated total number of potential respondents: 17,853.

Frequency of response: On occasion.

Estimated total average number of responses for each respondent: 2.5.

Estimated total annual burden hours: 191,261.

Estimated total annual costs: $6,283,510.

This includes an estimated burden cost of $6,283,510 and an estimated cost of $0 for capital investment or maintenance and operational costs.

III. What is the next step in the process for this ICR?

EPA will consider the comments received and amend the ICR as appropriate. The final ICR package will then be submitted to OMB for review and approval pursuant to 5 CFR 1320.12. EPA will issue another **Federal Register** notice pursuant to 5 CFR 1320.5(a)(1)(iv) to announce the submission of the ICR to OMB and the opportunity to submit additional comments to OMB. If you have any questions about this ICR or the approval process, please contact the person listed under **FOR FURTHER INFORMATION CONTACT**.

List of Subjects

Environmental protection, Reporting and recordkeeping requirements.

Dated: June 21, 2012.

James Jones

Acting Assistant Administrator, Office of Chemical Safety and Pollution Prevention.

[FR Doc. 2012–16442 Filed 7–3–12; 8:45 am]

BILLING CODE 6560–50–P

ENVIRONMENTAL PROTECTION AGENCY

[EPA–HQ–RCRA–2012–0163; FRL–9519–6]

Agency Information Collection Activities; Submission to OMB for Review and Approval; Comment Request; Generator Standards Applicable to Laboratories Owned by Eligible Academic Entities (Renewal)

AGENCY: Environmental Protection Agency (EPA).

ACTION: Notice.

SUMMARY: In compliance with the Paperwork Reduction Act (PRA) (44 U.S.C. 3501 *et seq.*), this document announces that an Information Collection Request (ICR) has been forwarded to the Office of Management and Budget (OMB) for review and approval. This is a request to renew an existing approved collection. The ICR, which is abstracted below, describes the nature of the information collection and its estimated burden and cost.

DATES: Additional comments may be submitted on or before August 6, 2012.

ADDRESSES: Submit your comments, referencing Docket ID No. EPA–HQ–RCRA–2012–0163, to (1) EPA, either online using *www.regulations.gov* (our preferred method), or by email to *rcra-docket@epa.gov,* or by mail to: EPA Docket Center, Environmental Protection Agency, Mail Code 28221T, 1200 Pennsylvania Ave. NW., Washington, DC 20460; and (2) OMB, by mail to: Office of Information and Regulatory Affairs, Office of Management and Budget (OMB), Attention: Desk Officer for EPA, 725 17th Street NW., Washington, DC 20503.

FOR FURTHER INFORMATION CONTACT: Kristen Fitzgerald, (Mail Code 5304P), Environmental Protection Agency, 1200 Pennsylvania Ave. NW., Washington, DC 20460; telephone number: 703–308–8286; fax number: 703–308–8827; email address: *fitzgerald.kristen@epa.gov.*

SUPPLEMENTARY INFORMATION: EPA has submitted the following ICR to OMB for review and approval according to the procedures prescribed in 5 CFR 1320.12. On March 20, 2012 (77 FR 16222), EPA sought comments on this ICR pursuant to 5 CFR 1320.8(d). EPA received no comments. Any additional comments on this ICR should be submitted to EPA and OMB within 30 days of this notice.

EPA has established a public docket for this ICR under Docket ID No EPA–HQ–RCRA–2012–0163, which is available for online viewing at *www.regulations.gov,* or in person viewing at the Resource Conservation and Recovery Act (RCRA) Docket in the

EPA Docket Center (EPA/DC), EPA West, Room 3334, 1301 Constitution Ave. NW., Washington, DC. The EPA/DC Public Reading Room is open from 8:30 a.m. to 4:30 p.m., Monday through Friday, excluding legal holidays. The telephone number for the Reading Room is (202) 566–1744, and the telephone number for the RCRA Docket is (202) 566–0270.

Use EPA's electronic docket and comment system at *www.regulations.gov,* to submit or view public comments, access the index listing of the contents of the docket, and to access those documents in the docket that are available electronically. Once in the system, select ''docket search,'' then key in the docket ID number identified above. Please note that EPA's policy is that public comments, whether submitted electronically or in paper, will be made available for public viewing at *www.regulations.gov* as EPA receives them and without change, unless the comment contains copyrighted material, Confidential Business Information (CBI), or other information whose public disclosure is restricted by statute. For further information about the electronic docket, go to *www.regulations.gov.*

Title: Generator Standards Applicable to Laboratories Owned by Eligible Academic Entities (Renewal).

ICR numbers: EPA ICR No. 2317.02, OMB Control No. 2050–0204.

ICR Status: This ICR is scheduled to expire on July 31, 2012. Under OMB regulations, the Agency may continue to conduct or sponsor the collection of information while this submission is pending at OMB. An Agency may not conduct or sponsor, and a person is not required to respond to, a collection of information, unless it displays a currently valid OMB control number. The OMB control numbers for EPA's regulations in title 40 of the CFR, after appearing in the **Federal Register** when approved, are listed in 40 CFR part 9, are displayed either by publication in the **Federal Register** or by other appropriate means, such as on the related collection instrument or form, if applicable. The display of OMB control numbers in certain EPA regulations is consolidated in 40 CFR part 9.

Abstract: The EPA has finalized an alternative set of generator requirements applicable to laboratories owned by eligible academic entities, as defined in the final rule. The rule, which established a new Subpart K within 40 CFR part 262, provides a flexible and protective set of regulations that address the specific nature of hazardous waste generation and accumulation in laboratories owned by colleges and universities, and teaching hospitals and non-profit research institutes that are either owned by or formally affiliated with a college or university. In addition, the final rule allows colleges and universities and these other eligible academic entities formally affiliated with a college or university the discretion to determine the most appropriate and effective method of compliance with these requirements by allowing them the choice of managing their hazardous wastes in accordance with the new alternative regulations as set forth in Subpart K or remaining subject to the existing generator regulations. The rule requires that an eligible academic entity choosing to manage its unwanted materials will submit a Site Identification Form on a one-time basis to the appropriate EPA Regional Administrator or, when appropriate, State Director in authorized States that have adopted the final rule. EPA and States will use this information to identify the entities and sites subject to the Subpart K requirements and ensure that all of these sites are managing their unwanted materials in a manner that is protective of human health and the environment.

When submitting the Site Identification Form, the eligible academic entity must, at a minimum, fill out the fields on the form that are specified at section 262.203(b)(1)–(11). Section 262.203(c) provides that an eligible academic entity must keep a copy of the notification on file at the eligible academic entity while its laboratories are subject to Subpart K. Section 262.203(d) provides that a teaching hospital that is not owned by a college or university must keep a copy of its formal written affiliation agreement with a college or university on file at the teaching hospital while its laboratories are subject to Subpart K. Section 262.203(e) provides that a non-profit research institute that is not owned by a college or university must keep a copy of its formal written affiliation agreement with a college or university on file at the non-profit research institute while its laboratories are subject to Subpart K. An eligible academic entity must submit a separate notification of withdrawal (Site Identification Form) for each EPA Identification Number (or site, for conditionally exempt small quantity generators) that is withdrawing from the requirements of Subpart K.

Burden Statement: The annual public reporting and recordkeeping burden for this collection of information is estimated to average .04 hours per response. The hourly reporting burden associated with Subpart K is estimated to be 10 minutes per respondent. This includes time for preparing and submitting a Site Identification Form to opt into Subpart K. The hourly recordkeeping burden associated with Subpart K is estimated to be approximately 280 hours per respondent. This includes time for reading the regulations, labeling containers, and preparing and maintaining specified documents (e.g., Laboratory Management Plan).

Burden means the total time, effort, or financial resources expended by persons to generate, maintain, retain, or disclose or provide information to or for a Federal agency. This includes the time needed to review instructions; develop, acquire, install, and utilize technology and systems for the purposes of collecting, validating, and verifying information, processing and maintaining information, and disclosing and providing information; adjust the existing ways to comply with any previously applicable instructions and requirements which have subsequently changed; train personnel to be able to respond to a collection of information; search data sources; complete and review the collection of information; and transmit or otherwise disclose the information.

Respondents/Affected Entities: Private sector; State, Local, or Tribal Governments.

Estimated Number of Respondents: 99.

Frequency of Response: Yearly, Once, On occasion.

Estimated Total Annual Hour Burden: 27,719 hours.

Estimated Total Annual Cost: $1,322,414, which includes $1,218,694 annualized labor costs and $103,720 annualized capital or O&M costs.

Changes in the Estimates: There is an increase of 13,260 hours in the total estimated burden currently identified in the OMB Inventory of Approved ICR Burdens. This increase is an adjustment to the existing estimates based on data gathered through industry consultations and review of the Resource Conservation and Recovery Act Information (RCRAInfo) national database, not due to program changes.

John Moses,

Director, Collection Strategies Division.

[FR Doc. 2012–16391 Filed 7–3–12; 8:45 am]

BILLING CODE 6560–50–P

ENVIRONMENTAL PROTECTION AGENCY

[EPA–HQ–OECA–2011–0265; FRL–9519–7]

Agency Information Collection Activities; Submission to OMB for Review and Approval; Comment Request; NESHAP for Municipal Solid Waste Landfills (Renewal)

AGENCY: Environmental Protection Agency (EPA).

ACTION: Notice.

SUMMARY: In compliance with the Paperwork Reduction Act (44 U.S.C. 3501 *et seq.*), this document announces that an Information Collection Request (ICR) has been forwarded to the Office of Management and Budget (OMB) for review and approval. This is a request to renew an existing approved collection. The ICR which is abstracted below describes the nature of the collection and the estimated burden and cost.

DATES: Additional comments may be submitted on or before August 6, 2012.

ADDRESSES: Submit your comments, referencing docket ID number EPA–HQ–OECA–2011–0265, to: (1) EPA online using *www.regulations.gov* (our preferred method), or by email to: *docket.oeca@epa.gov,* or by mail to: EPA Docket Center (EPA/DC), Environmental Protection Agency, Enforcement and Compliance Docket and Information Center, Mail Code 28221T, 1200 Pennsylvania Avenue NW., Washington, DC 20460; and (2) OMB at: Office of Information and Regulatory Affairs, Office of Management and Budget (OMB), Attention: Desk Officer for EPA, 725 17th Street, NW., Washington, DC 20503.

FOR FURTHER INFORMATION CONTACT: Learia Williams, Monitoring, Assistance, and Media Programs Division, Office of Compliance, Mail Code 2227A, Environmental Protection Agency, 1200 Pennsylvania Avenue NW., Washington, DC 20460; telephone number: (202) 564–4113; fax number: (202) 564–0050; email address: *williams.learia@epa.gov.*

SUPPLEMENTARY INFORMATION: EPA has submitted the following ICR to OMB for review and approval according to the procedures prescribed in 5 CFR 1320.12. On May 9, 2011 (76 FR 26900), EPA sought comments on this ICR pursuant to 5 CFR 1320.8(d). EPA received no comments. Any additional comments on this ICR should be submitted to both EPA and OMB within 30 days of this notice.

EPA has established a public docket for this ICR under docket ID number EPA–HQ–OECA–2011–0265, which is available for public viewing online at *http://www.regulations.gov,* or in person viewing at the Enforcement and Compliance Docket in the EPA Docket Center (EPA/DC), EPA West, Room 3334, 1301 Constitution Avenue NW., Washington, DC. The EPA Docket Center Public Reading Room is open from 8:30 a.m. to 4:30 p.m., Monday through Friday, excluding legal holidays. The telephone number for the Reading Room is (202) 566–1744, and the telephone number for the Enforcement and Compliance Docket is (202) 566–1752.

Use EPA's electronic docket and comment system at *http://www.regulations.gov* to submit or view public comments, access the index listing of the contents of the docket, and to access those documents in the docket that are available electronically. Once in the system, select ''docket search,'' then key in the docket ID number identified above. Please note that EPA's policy is that public comments, whether submitted electronically or in paper, will be made available for public viewing at *http://www.regulations.gov* as EPA receives them and without change, unless the comment contains copyrighted material, Confidential Business Information (CBI), or other information whose public disclosure is restricted by statute. For further information about the electronic docket, go to *www.regulations.gov.*

Title: NESHAP for Municipal Solid Waste Landfills (Renewal).

ICR Numbers: EPA ICR Number 1938.05, OMB Control Number 2060–0505.

ICR Status: This ICR is scheduled to expire on August 31, 2012. Under OMB regulations, the Agency may continue to either conduct or sponsor the collection of information while this submission is pending at OMB.

Abstract: The National Emission Standards for Hazardous Air Pollutants (NESHAP) for Municipal Solid Waste (MSW) Landfills were proposed on November 7, 2000, and promulgated on January 16, 2003. The affected entities are subject to the General Provisions of the NESHAP at 40 CFR part 63, subpart A, and any changes, or additions to the Provisions specified at 40 CFR part 63, subpart AAAA.

Owners or operators of the affected facilities must submit initial notification, performance tests, and periodic reports and results. Owners or operators are also required to maintain records of the occurrence and duration of any startup, shutdown, or malfunction in the operation of an affected facility, or any period during which the monitoring system is inoperative. Reports, at a minimum, are required semiannually.

Burden Statement: The annual public reporting and recordkeeping burden for this collection of information is estimated to average 5 hours per response. ''Burden'' means the total time, effort, or financial resources expended by persons to generate, maintain, retain, or disclose or provide information to or for a Federal agency. This includes the time needed to review instructions; develop, acquire, install, and utilize technology and systems for the purposes of collecting, validating, and verifying information, processing and maintaining information, and disclosing and providing information; adjust the existing ways to comply with any previously applicable instructions and requirements which have subsequently changed; train personnel to be able to respond to a collection of information; search data sources; complete and review the collection of information; and transmit or otherwise disclose the information.

Respondents/Affected Entities: Owners or operators of municipal solid waste (MSW) landfills.

Estimated Number of Respondents: 1,124.

Frequency of Response: Occasionally, annually, and semiannually.

Estimated Total Annual Hour Burden: 18,283.

Estimated Total Annual Cost: $1,768,692, which includes $1,751,832 in labor costs, no capital/startup costs, and $16,860 in operation and maintenance (O&M) costs.

Changes in the Estimates: There is an adjustment increase in the total estimated burden hours and costs for both the respondents and the Agency as currently identified in the OMB Inventory of Approved Burdens. This increase is not due to any program changes. The increase in burden hours and costs reflects both a growth in the respondent universe since the last ICR renewal, and an increase in labor rates. This ICR uses updated labor rates in estimating the costs for all labor categories.

John Moses,

Director, Collection Strategies Division.

[FR Doc. 2012–16380 Filed 7–3–12; 8:45 am]

BILLING CODE 6560–50–P

ENVIRONMENTAL PROTECTION AGENCY

[EPA–HQ–OPP–2011–0843; FRL–9519–3]

Agency Information Collection Activities; Submission to OMB for Review and Approval; Comment Request; Notice of Arrival of Pesticides and Devices Under FIFRA

AGENCY: Environmental Protection Agency (EPA).

ACTION: Notice.

SUMMARY: In compliance with the Paperwork Reduction Act (PRA) (44 U.S.C. 3501 *et seq.*), this document announces that an Information Collection Request (ICR) has been forwarded to the Office of Management and Budget (OMB) for review and approval. This is a request to renew an existing approved collection. The ICR, which is abstracted below, describes the nature of the information collection and its estimated burden and cost.

DATES: Additional comments may be submitted on or before August 6, 2012.

ADDRESSES: Submit your comments, referencing Docket ID No. EPA–HQ–OPP–2011–0843, to (1) EPA online using *www.regulations.gov* (our preferred method), or by mail to: EPA Docket Center, Environmental Protection Agency, Office of Pesticide Programs Regulatory Public Docket (28221T), 1200 Pennsylvania Ave. NW., Washington, DC 20460, and (2) OMB by mail to: Office of Information and Regulatory Affairs, Office of Management and Budget (OMB), Attention: Desk Officer for EPA, 725 17th Street NW., Washington, DC 20503.

FOR FURTHER INFORMATION CONTACT: Scott Drewes, Field and External Affairs Division, (7506P), Environmental Protection Agency, 1200 Pennsylvania Ave. NW., Washington, DC 20460; telephone number: (703) 347–0107; fax number: (703) 305–5884; email address: *Drewes.Scott@epa.gov.*

SUPPLEMENTARY INFORMATION: EPA has submitted the following ICR to OMB for review and approval according to the procedures prescribed in 5 CFR 1320.12. On Wednesday, December 14, 2011 (76 FR 77817), EPA sought comments on this ICR pursuant to 5 CFR 1320.8(d). EPA received 3 comments during the comment period, which are addressed in the ICR. Any additional comments on this ICR should be submitted to EPA and OMB within 30 days of this notice.

EPA has established a public docket for this ICR under Docket ID No. EPA–HQ–OPP–2011–0843, which is available for online viewing at *www.regulations.gov,* or in person viewing at the Office of Pesticide Programs (OPP) Regulatory Public Docket in the EPA Docket Center (EPA/DC), EPA West, Room 3334, 1301 Constitution Ave. NW., Washington, DC. The EPA/DC Public Reading Room is open from 8 a.m. to 4:30 p.m., Monday through Friday, excluding legal holidays. The telephone number for the Reading Room is 202–566–1744, and the telephone number for the OPP Regulatory Public Docket is 703–305–5805.

Use EPA's electronic docket and comment system at *www.regulations.gov,* to submit or view public comments, access the index listing of the contents of the docket, and to access those documents in the docket that are available electronically. Once in the system, select ''docket search,'' then key in the docket ID number identified above. Please note that EPA's policy is that public comments, whether submitted electronically or in paper, will be made available for public viewing at *www.regulations.gov* as EPA receives them and without change, unless the comment contains copyrighted material, confidential business information (CBI), or other information whose public disclosure is restricted by statute. For further information about the electronic docket, go to *www.regulations.gov.*

Title: Notice of Arrival of Pesticides and Devices under section 17(c) of FIFRA.

ICR Numbers: EPA ICR No. 0152.10, OMB Control No. 2070–0020.

ICR Status: This ICR is scheduled to expire on August 31, 2012. Under OMB regulations, the Agency may continue to conduct or sponsor the collection of information while this submission is pending at OMB. An Agency may not conduct or sponsor, and a person is not required to respond to, a collection of information, unless it displays a currently valid OMB control number. The OMB control numbers for EPA's regulations in title 40 of the CFR, after appearing in the **Federal Register** when approved, are listed in 40 CFR part 9, are displayed either by publication in the **Federal Register** or by other appropriate means, such as on the related collection instrument or form, if applicable. The display of OMB control numbers in certain EPA regulations is consolidated in 40 CFR part 9.

Abstract: The Customs and Border Protection (CBP) regulations at 19 CFR 12.112 require that an importer desiring to import a pesticide or device into the United States shall, prior to the shipment's arrival in the United States, submit a Notice of Arrival of Pesticides and Devices (EPA Form 3540–1) to EPA. EPA Form 3540–1 requires the identification and contact information of parties involved in the importation of the pesticide or device and information on the identity of the imported pesticide or device shipment. EPA will review the form and indicate the disposition of the shipment upon its arrival in the United States. Upon completing Form 3540–1, EPA returns the form to the importer of record or authorized agent, who must present the form to CBP upon arrival of the shipment at the port of entry. This is necessary to ensure that EPA is notified of the arrival of pesticides and devices as required under FIFRA section 17(c), and that EPA has the ability to examine such shipments to determine compliance with FIFRA. Upon the arrival of the shipment, the importer presents the completed Notice of Arrival (NOA) to the CBP District Director at the port of entry. CBP compares entry documents for the shipment with the NOA and notifies the EPA regional office of any discrepancies.

During this renewal of this information collection, EPA is revising EPA Form 3540–1. The revisions clarify the instructions for completing the form, revise the data items, and update the terminology used on the form to be consistent with those used by CBP. In addition, EPA is capturing the burden of providing supplemental information submitted with Form 3540–1 to the Agency by most importers on a voluntary basis.

Burden Statement: The annual public reporting and recordkeeping burden for this collection of information is estimated to average 0.43 hours per response. Burden means the total time, effort, or financial resources expended by persons to generate, maintain, retain, or disclose or provide information to or for a Federal agency. This includes the time needed to review instructions; develop, acquire, install, and utilize technology and systems for the purposes of collecting, validating, and verifying information, processing and maintaining information, and disclosing and providing information; adjust the existing ways to comply with any previously applicable instructions and requirements which have subsequently changed; train personnel to be able to respond to a collection of information; search data sources; complete and review the collection of information; and transmit or otherwise disclose the information.

Respondents/Affected Entities: Entities potentially affected by this ICR are individuals or entities that import pesticides into the United States. The North American Industrial Classification System (NAICS) codes

assigned to the parties responding to this information collection include NAICS code 236220 (Commercial and Institutional Building Construction), Sector 11 (Agriculture, Forestry, Fishing and Hunting), and Sector 42 (Wholesale Trade). The majority of responses come from entities that fall under NAICS code 325300 (Pesticide and Other Agricultural Chemical Manufacturing).

Estimated Number of Respondents: 28,000.

Frequency of Response: On occasion.

Estimated Total Annual Hour Burden: 12,040.

Estimated Total Annual Cost: $685,146, includes $0 annualized capital or O&M costs.

Changes in the Estimates: There is an increase of 4540 hours in the total estimated burden currently identified in the OMB Inventory of Approved ICR Burdens. This increase is a result of an increase in the annual number of NOAs submitted and an increase in the burden hours per response. The average, annual number of NOAs submitted to EPA increased from 25,000 to 28,000. The average burden hours per response will change from 0.3 hours for the previous ICR renewal to 0.43 hours for this ICR renewal. This change in burden hours per response is a result of changes to the data items on EPA Form 3450–1, and well as an accounting of the burden of voluntarily submitting certain information. Specifically, this burden estimate accounts for the new burdens related to providing information for the telephone numbers and email addresses of the shipper, importer of record, and licensed customs broker, when supplying name and address information, and for the complete address, including telephone and email address, of the carrier be provided. In addition, EPA is accounting for the burden of voluntarily providing active ingredients and percentage of each, supporting documentation for registered and unregistered pesticides, as well as intended use information for unregistered pesticides. This change is an adjustment.

John Moses,

Director, Collection Strategies Division.

[FR Doc. 2012–16379 Filed 7–3–12; 8:45 am]

BILLING CODE 6560–50–P

ENVIRONMENTAL PROTECTION AGENCY

[EPA–HQ–OECA–2011–0263; FRL–9519–5]

Agency Information Collection Activities; Submission to OMB for Review and Approval; Comment Request; NESHAP for Printing, Coating and Dyeing of Fabrics and Other Textiles (Renewal)

AGENCY: Environmental Protection Agency (EPA).

ACTION: Notice.

SUMMARY: In compliance with the Paperwork Reduction Act (44 U.S.C. 3501 *et seq.*), this document announces that an Information Collection Request (ICR) has been forwarded to the Office of Management and Budget (OMB) for review and approval. This is a request to renew an existing approved collection. The ICR which is abstracted below describes the nature of the collection and the estimated burden and cost.

DATES: Additional comments may be submitted on or before August 6, 2012.

ADDRESSES: Submit your comments, referencing docket ID number EPA–HQ–OECA–2011–0263, to: (1) EPA online, using *www.regulations.gov* (our preferred method), or by email to *docket.oeca@epa.gov,* or by mail to: EPA Docket Center (EPA/DC), Environmental Protection Agency, Enforcement and Compliance Docket and Information Center, Mail Code 28221T, 1200 Pennsylvania Avenue NW., Washington, DC 20460; and (2) OMB at: Office of Information and Regulatory Affairs, Office of Management and Budget (OMB), Attention: Desk Officer for EPA, 725 17th Street NW., Washington, DC 20503.

FOR FURTHER INFORMATION CONTACT: Learia Williams, Monitoring, Assistance, and Media Programs Division, Office of Compliance, Mail Code 2227A, Environmental Protection Agency, 1200 Pennsylvania Avenue NW., Washington, DC 20460; telephone number: (202) 564–4113; fax number: (202) 564–0050; email address: *williams.learia@epa.gov.*

SUPPLEMENTARY INFORMATION: EPA has submitted the following ICR to OMB for review and approval according to the procedures prescribed in 5 CFR 1320.12. On May 9, 2011 (76 FR 26900), EPA sought comments on this ICR pursuant to 5 CFR 1320.8(d). EPA received no comments. Any additional comments on this ICR should be submitted to both EPA and OMB within 30 days of this notice.

EPA has established a public docket for this ICR under docket ID number EPA–HQ–OECA–2011–0263, which is available for public viewing online at *http://www.regulations.gov,* or in person viewing at the Enforcement and Compliance Docket in the EPA Docket Center (EPA/DC), EPA West, Room 3334, 1301 Constitution Avenue NW., Washington, DC. The EPA Docket Center Public Reading Room is open from 8:30 a.m. to 4:30 p.m., Monday through Friday, excluding legal holidays. The telephone number for the Reading Room is (202) 566–1744, and the telephone number for the Enforcement and Compliance Docket is (202) 566–1752.

Use EPA's electronic docket and comment system at *http://www.regulations.gov,* to either submit or view public comments, access the index listing of the contents of the docket, and to access those documents in the docket that are available electronically. Once in the system, select ''docket search,'' then key in the docket ID number identified above. Please note that EPA's policy is that public comments, whether submitted electronically or in paper, will be made available for public viewing at *http://www.regulations.gov* as EPA receives them and without change, unless the comment contains copyrighted material, Confidential Business Information (CBI), or other information whose public disclosure is restricted by statute. For further information about the electronic docket, go to *www.regulations.gov.*

Title: NESHAP for Printing, Coating and Dyeing of Fabrics and other Textiles (Renewal).

ICR Numbers: EPA ICR Number 2071.05, OMB Control Number 2060–0522.

ICR Status: This ICR is scheduled to expire on August 31, 2012. Under OMB regulations, the Agency may continue to conduct or sponsor the collection of information while this submission is pending at OMB.

Abstract: The affected entities are subject to the General Provisions of the NESHAP at 40 CFR part 63, subpart A, and any changes, or additions to the Provisions specified at 40 CFR part 63, subpart OOOO.

Owners or operators of the affected facilities must submit initial notification, performance tests, and periodic reports and results. Owners or operators are also required to maintain records of the occurrence and duration of any startup, shutdown, or malfunction in the operation of an affected facility, or any period during which the monitoring system is

inoperative. Reports, at a minimum, are required semiannually.

Burden Statement: The annual public reporting and recordkeeping burden for this collection of information is estimated to average 69 hours per response. ''Burden'' means the total time, effort, or financial resources expended by persons to generate, maintain, retain, or disclose or provide information to or for a Federal agency. This includes the time needed to review instructions; develop, acquire, install, and utilize technology and systems for the purposes of collecting, validating and verifying information, processing and maintaining information, and disclosing and providing information; adjust the existing ways to comply with any previously applicable instructions and requirements which have subsequently changed; train personnel to be able to respond to a collection of information; search data sources; complete and review the collection of information; and transmit or otherwise disclose the information.

Respondents/Affected Entities: Owners or operators of printing, coating and dyeing of fabrics and other textiles.

Estimated Number of Respondents: 143.

Frequency of Response: Initially, occasionally, and semiannually.

Estimated Total Annual Hour Burden: 21,271.

Estimated Total Annual Cost: $2,044,793, which includes $2,038,122 in labor costs, $2,953 in capital/startup costs, and $3,718 in operation and maintenance (O&M) costs.

Changes in the Estimates: There is an adjustment increase in the total estimated burden hours and costs for both the respondents and the Agency as currently identified in the OMB Inventory of Approved Burdens. This increase is not due to any program changes. The increase in the burden and cost reflects a growth in the respondent universe since the last ICR renewal and an increase in labor rates. This ICR uses updated labor rates in estimating the costs for all labor categories.

John Moses,

Director, Collection Strategies Division.

[FR Doc. 2012–16390 Filed 7–3–12; 8:45 am]

BILLING CODE 6560–50–P

ENVIRONMENTAL PROTECTION AGENCY

[FRL–9696–3]

National Advisory Council for Environmental Policy and Technology; Charter Renewal

AGENCY: Environmental Protection Agency (EPA).

ACTION: Notice.

Notice is hereby given that the Environmental Protection Agency (EPA) has determined that, in accordance with the provisions of the Federal Advisory Committee Act (FACA), 5 U.S.C. App. 2, the National Advisory Council for Environmental Policy and Technology (NACEPT) is a necessary committee which is in the public interest. Accordingly, NACEPT will be renewed for an additional two-year period. The purpose of NACEPT is to provide advice and recommendations to the Administrator of EPA on a broad range of environmental policy, technology and management issues. Inquiries may be directed to Mark Joyce, U.S. EPA, (Mail Code 1601M), 1200 Pennsylvania Avenue NW., Washington, DC 20460, telephone (202) 564–2130, or *joyce.mark@epa.gov.*

Dated: June 25, 2012.

Cynthia Jones-Jackson,

Acting Director, Office of Federal Advisory Committee Management and Outreach.

[FR Doc. 2012–16451 Filed 7–3–12; 8:45 am]

BILLING CODE 6560–50–P

ENVIRONMENTAL PROTECTION AGENCY

[FRL–9696–4]

National Advisory Council for Environmental Policy and Technology

AGENCY: Environmental Protection Agency (EPA).

ACTION: Notice of Advisory Committee Meeting.

SUMMARY: Under the Federal Advisory Committee Act, Public Law 92463, EPA gives notice of a public meeting of the National Advisory Council for Environmental Policy and Technology (NACEPT). NACEPT provides advice to the EPA Administrator on a broad range of environmental policy, technology, and management issues. NACEPT represents diverse interests from academia, industry, non-governmental organizations, and state, local, and tribal governments. The purpose of this meeting is to continue developing recommendations to the Administrator regarding actions that EPA can take in response to the National Academy of Sciences Report on ''Incorporating Sustainability in the U.S Environmental Protection Agency.'' A copy of the agenda for the meeting will be posted at *http://www.epa.gov/ofacmo/nacept/cal-nacept.htm.*

DATES: NACEPT will hold a two-day public meeting on Thursday, August 2, 2012, from 8:30 a.m. to 5 p.m. (ET) and Friday, August 3, 2012, from 8:30 a.m. to 2 p.m. (ET).

ADDRESSES: The meeting will be held at the EPA East Building, Room 2138, 1201 Constitution Avenue NW., Washington, DC 20004.

FOR FURTHER INFORMATION CONTACT: Mark Joyce, Acting Designated Federal Officer, *joyce.mark@epa.gov,* (202) 564–2130, U.S. EPA, Office of Federal Advisory Committee Management and Outreach (1601M), 1200 Pennsylvania Avenue NW., Washington, DC 20460.

SUPPLEMENTARY INFORMATION: Requests to make oral comments or to provide written comments to NACEPT should be sent to Eugene Green at green.eugene@epa.gov by Thursday, July 26, 2012. The meeting is open to the public, with limited seating available on a first-come, first-served basis. Members of the public wishing to attend should contact Eugene Green at *green.eugene@epa.gov* or (202) 564–2432 by July 26, 2012.

Meeting Access: Information regarding accessibility and/or accommodations for individuals with disabilities should be directed to Eugene Green at the email address or phone number listed above. To ensure adequate time for processing, please make requests for accommodations at least 10 days prior to the meeting.

Dated: June 25, 2012.

Mark Joyce,

Acting Designated Federal Officer.

[FR Doc. 2012–16454 Filed 7–3–12; 8:45 am]

BILLING CODE 6560–50–P

FEDERAL COMMUNICATIONS COMMISSION

Information Collection(s) Being Submitted for Review and Approval to the Office of Management and Budget (OMB)

AGENCY: Federal Communications Commission.

ACTION: Notice; request for comments.

SUMMARY: As part of its continuing effort to reduce paperwork burden and as required by the Paperwork Reduction

Act (PRA) of 1995, the Federal Communications Commission invites the general public and other Federal agencies to take this opportunity to comment on the following information collection(s). Comments are requested concerning: whether the proposed collection of information is necessary for the proper performance of the functions of the Commission, including whether the information shall have practical utility; the accuracy of the Commission's burden estimates; ways to enhance the quality, utility, and clarity of the information collected; ways to minimize the burden of the collection of information on the respondents, including the use of automated collection techniques or other forms of information technology; and ways to further reduce the information collection burden on small business concerns with fewer than 25 employees.

The FCC may not conduct or sponsor a collection of information unless it displays a currently valid OMB control number. No person shall be subject to any penalty for failing to comply with a collection of information subject to the Paperwork Reduction Act (PRA) that does not display a valid OMB control number.

DATES: Written Paperwork Reduction Act (PRA) comments should be submitted on or before August 6, 2012. If you anticipate that you will be submitting PRA comments, but find it difficult to do so within the period of time allowed by this notice, you should advise the FCC contact listed below as soon as possible.

ADDRESSES: Submit your PRA comments to Nicholas A. Fraser, Office of Management and Budget (OMB), via fax at 202–395–5167 or via Internet at *Nicholas_A._Fraser@omb.eop.gov* and to Judith B. Herman, Federal Communications Commission, via the Internet at *Judith-b.herman@fcc.gov.* To submit your PRA comments by email send them to: *PRA@fcc.gov.*

FOR FURTHER INFORMATION CONTACT: Judith B. Herman, Office of Managing Director, FCC, at 202–418–0214.

SUPPLEMENTARY INFORMATION:

OMB Control Number: 3060–0228.

Title: Section 80.59, Compulsory Ship Inspections and Ship Inspection Certificates.

Form Numbers: FCC Forms 806, 824, 827 and 829.

Type of Review: Revision of a currently approved collection.

Respondents: Business or other for-profit entities, not-for-profit institutions and state, local or tribal government.

Number of Respondents: 1,310 respondents; 1,310 responses.

Estimated Time per Response: .084 hours (5 minutes) up to 4 hours per response.

Frequency of Response: On occasion, annual and every five year reporting requirements, recordkeeping requirement and third party disclosure requirement.

Obligation to Respond: Required to obtain or retain benefits. Statutory authority for this information collection is contained in 47 U.S.C. Sections 4, 303, 309, 332 and 362 of the Communications Act of 1934, as amended.

Total Annual Burden: 5,445 hours.

Total Annual Cost: N/A.

Privacy Impact Assessment: N/A.

Needs and Uses: The Commission is seeking OMB approval for this revised collection. The Commission will submit this information collection to the OMB after publication of this 30 day notice.

The requirements contained in 47 CFR 80.59 of the Commission's rules are necessary to implement the provisions of Section 362(b) of the Communications Act of 934, as amended, which require the Commission to inspect the radio installation of large cargo ships and certain passenger ships at least once a year to ensure that the radio installation is in compliance with the requirements of the Communications Act.

Further, section 80.59(d) states that the Commission may, upon a finding that the public interest would be served, grant a waiver of the annual inspection required by section 362(b) of the Communications Act of 1934, for a period of not more than 90 days for the sole purpose of enabling the United States vessel to complete its voyage and proceed to a port in the United States where an inspection can be held. An information application must be submitted by the ship's owner, operator or authorized agent. The application must be submitted to the Commission's District Director or Resident Agent in charge of the FCC office nearest the port of arrival at least three days before the ship's arrival. The application must provide specific information that is in rule section 80.59.

Additionally, the Communications Act requires the inspection of small passenger ships at least once every five years.

The Safety Convention (to which the United States is a signatory) also requires an annual inspection.

The Commission allows FCC-licensed technicians to conduct these inspections. FCC-licensed technicians certify that the ship has passed an inspection and issue a safety certificate. These safety certificates, FCC Forms 806, 824, 827 and 829 (approved by the OMB under OMB Control Number 3060–0835) indicate that the vessel complies with the Communications Act of 1934, as amended and the Safety Convention. These technicians are required to provide a summary of the results of the inspection in the ship's log that the inspection was satisfactory.

Inspection certificates issued in accordance with the Safety Convention must be posted in a prominent and accessible place on the ship (third party disclosure requirement).

Finally, the Commission seeks revision of this OMB control number to merge this information collection with OMB Control Number 3060–0835. We will retain OMB Control Number 3060–0228 as the active number in OMB's system and upon OMB approval will voluntarily discontinue OMB Control Number 3060–0835.

Federal Communications Commission.

Marlene H. Dortch,

Secretary, Office of the Secretary, Office of Managing Director.

[FR Doc. 2012–16349 Filed 7–3–12; 8:45 am]

BILLING CODE 6712–01–P

FEDERAL MARITIME COMMISSION

Notice of Agreements Filed

The Commission hereby gives notice of the filing of the following agreements under the Shipping Act of 1984. Interested parties may submit comments on the agreements to the Secretary, Federal Maritime Commission, Washington, DC 20573, within ten days of the date this notice appears in the **Federal Register**. Copies of the agreements are available through the Commission's Web site (*www.fmc.gov*) or by contacting the Office of Agreements at (202)–523–5793 or *tradeanalysis@fmc.gov.*

Agreement No.: 012167–001.

Title: KL/PIL Space Charter and Sailing Agreement.

Parties: Kawasaki Kisen Kaisha, Ltd, and Pacific International Lines (PTE) Ltd.

Filing Party: Lauren S. Loyd, Esquire; Nixon Peabody LLP, 555 West Fifth Street, 46th Floor; Los Angeles, CA 90013.

Synopsis: The amendment clarifies the geographic scope and revises the TEU capacity.

By Order of the Federal Maritime Commission.

Dated: June 29, 2012.

Karen V. Gregory,

Secretary.

[FR Doc. 2012–16471 Filed 7–3–12; 8:45 am]

BILLING CODE 6730–01–P

FEDERAL MARITIME COMMISSION

Ocean Transportation Intermediary License; Applicants

Notice is hereby given that the following applicants have filed with the Federal Maritime Commission an application for a license as a Non-Vessel-Operating Common Carrier (NVO) and/or Ocean Freight Forwarder (OFF)—Ocean Transportation Intermediary (OTI) pursuant to section 40901 of the Shipping Act of 1984 (46 U.S.C. 40101). Notice is also hereby given of the filing of applications to amend an existing OTI license or the Qualifying Individual (QI) for a license.

Interested persons may contact the Office of Transportation Intermediaries, Federal Maritime Commission, Washington, DC 20573, by telephone at (202) 523–5843 or by email at *OTI@fmc.gov.*

A A Shipping Incorporated (NVO & OFF), 11526 Harwin Drive, Houston, TX 77072, Officers: Barbara C. Mozie, President/Treasurer, (Qualifying Individual), Geraldine O. Ononiba, Vice President, Application Type: New NVO & OFF License.

ASF, Inc. (NVO & OFF), 3812 Springhill Avenue, Mobile, AL 36608, Officers: Thomas E. Heagle, Senior Vice President Operations, (Qualifying Individual), Samford T. Myers, Chairman, Application Type: QI Change.

B.R.A.L. Miami, Inc. (OFF), 7766 NW 46 Street, Miami, FL 33166, Officers: Amalia S. Freire, Secretary/Treasurer, (Qualifying Individual), Alvaro Cruz, President, Application Type: New OFF License.

Best Global Logistics USA, Inc dba Siam Intercargo Services (NVO & OFF), 2650 Dalemead Street, Torrance, CA 90505, Officers: Ratchanee Supbuatong, Vice President, (Qualifying Individual), Wing-Ham Chu, Director/President/Treasurer/CFO, Application Type: New NVO & OFF License.

CTL USA, Inc. (NVO), 729 66th Street, Brooklyn, NY 11220, Officers: Joy Fu, Secretary/Treasurer/CFO, (Qualifying Individual), Sin F. Chan, Director/President, Application Type: New NVO License.

Epic International Transport, LLC (NVO), 6048 Lido Lane, Long Beach, CA 90803, Officer: Charles Brennan, Member/Manager, (Qualifying Individual), Application Type: New NVO License.

Global Parcel System LLC (NVO & OFF), 8240 NW. 30th Terrace, Miami, FL 33122, Officer: Alejandro Alvarez, Member, (Qualifying Individual), Application Type: New NVO & OFF License.

Glovis America, Inc. (NVO & OFF), 17305 Von Karman Avenue, #200, Irvine, CA 92614, Officers: Sharon S. Choi, Vice President, (Qualifying Individual), Kyung Bae Kim, CEO, Application Type: QI Change.

JK International Inc. (NVO & OFF), 825 S. Graham Street, Memphis, TN 38111, Officers: Teresa Donaldson, Secretary, (Qualifying Individual), James Kim, President/CEO, Application Type: Trade Name Change.

Knight (USA), L.L.C. (NVO), 5 Wellington Court, Eastampton, NJ 08060, Officers: Louis Simone, Operating Manager, (Qualifying Individual), Jack Marcario, Member, Application Type: New NVO License.

Mohammad Bagegni dba Coastal Auto Exporters (OFF), 23 Balcom Road, Pelham, NH 03076, Officer: Mohammad A. Bagegni, Sole Proprietor, (Qualifying Individual), Application Type: New OFF License.

Nippon Concept America, LLC (OFF), 2203 Timberloch Place, Suite 218D, The Woodlands, TX 77380, Officers: Martine L. Plunkett, Manager, (Qualifying Individual), Bertus Penters, Manager, Application Type: New OFF License.

Panamerican Shipping Inc. (NVO & OFF), 710 Franklin Avenue, Brooklyn, NY 11238, Officers: Lamar Bailey, President, (Qualifying Individual), Cristine Bailey, Secretary/Vice President, Application Type: Add NVO Service.

Sinai Logistics LLC (NVO & OFF), 11419 NW. 112th Street, Medley, FL 33178, Officer: Louissana Dappo, Member, (Qualifying Individual), Application Type: New NVO & OFF License.

SR Logistics, Inc. (OFF), 2338 E. Anaheim Street, #203E, Long Beach, CA 90804, Officer: Richard R. Seng, President/Secretary/Treasurer, (Qualifying Individual), Application Type: New OFF License.

Status Baby Moving Corp. (NVO), 2400 W. Copans Road, Suite 9, Pompano Beach, FL 33069, Officers: Katrina Payne, Secretary, (Qualifying Individual), Armando Christovam, President/Director, Application Type: New NVO License.

Transglobal Logistics Inc (OFF), 100 Oceangate, #1200, Long Beach, CA 90802, Officers: Gope R. Vaswani, Secretary/Treasurer, (Qualifying Individual), Sanjay Chopra, Director/President, Application Type: QI Change & Business Structure Change.

Universal Shippers Group USA, LLC (NVO & OFF), 1077A Fred Drive, #A, Morrow, GA 30260, Officers: Alfred A.M. Khannu, Manager/Secretary, (Qualifying Individual), Kadiatu Khannu, President, Application Type: New NVO & OFF License.

US Project Management LLC (NVO & OFF), 6311 Auburn Terrace Ct., Spring, TX 77389, Officer: Won (Eric) Y. Kang, Member/Manager, (Qualifying Individual), Application Type: New NVO & OFF License.

West Indies Trade & Consulting, LLC (OFF), 5200 Dallas Highway, Suite 200 #301, Powder Springs, GA 30127, Officers: Mark Weimann, President, (Qualifying Individual), Brad P. Mangus, Member, Application Type: New OFF License.

Dated: June 29, 2012.

Karen V. Gregory,

Secretary.

[FR Doc. 2012–16473 Filed 7–3–12; 8:45 am]

BILLING CODE 6730–01–P

DEPARTMENT OF HEALTH AND HUMAN SERVICES

[Document Identifier: HHS–EGOV–16815–60D]

Agency Information Collection Activities; Proposed Collection; Public Comment Request

AGENCY: Electronic Government Office, HHS.

ACTION: Notice.

SUMMARY: In compliance with the requirement of section 3506(c)(2)(A) of the Paperwork Reduction Act of 1995, the Electronic Government Office (EGOV), Department of Health and Human Services, announces plans to submit a request to extend the use of an approved Information Collection Request (ICR) to the Office of Management and Budget. The approved ICR is assigned OMB control number 4040–0005 and expires on August 31, 2012. Prior to submitting that ICR to OMB, HHS seeks comments from the public regarding the burden estimate, below, or any other aspect of the ICR. HHS especially requests comments on (1) The necessity and utility of the proposed information collection for the proper performance of the agency's functions, (2) the accuracy of the estimated burden, (3) ways to enhance the quality, utility, and clarity of the information to be collected, and (4) the

use of automated collection techniques or other forms of information technology to minimize the information collection burden.

Deadline: Comments on the ICR must be received within 60 days of the issuance of this notice.

ADDRESSES: Submit your comments, including the document identifier HHS–EGOV–16815–60D, to *ed.calimag@hhs.gov* or by calling (202) 690–7569.

Copies of the supporting statement and any related forms for the ICR may also be requested through the above email or telephone number.

Information Collection Request Title: SF–424 Individual.

Abstract: The SF–424 Individual form is the common Federal (standard) form for grant applications for individuals. It replaced numerous agency-specific forms.

Burden Statement: Burden in this context means the time expended by persons to generate, maintain, retain, disclose or provide the information requested. This includes the time needed to review instructions, to develop, acquire, install and utilize technology and systems for the purpose of collecting, validating and verifying information, processing and maintaining information, and disclosing and providing information, to train personnel and to be able to respond to a collection of information, to search data sources, to complete and review the collection of information, and to transmit or otherwise disclose the information. The total annual burden hours estimated for this ICR, summarized in the table below, are based on information gathered from the National Endowment for the Arts (NEA) and the National Endowment for the Humanities (NEH).

TOTAL ESTIMATED ANNUALIZED BURDEN FOR SF–424 INDIVIDUAL—HOURS

Organization	Number of respondents	Number of responses per respondent	Average burden per response (in hours)	Total burden hours
NEA	1,591	1	1	1,591
NEH	3,394	1	1	3,394
Total	4,985			4,985

Keith A. Tucker,

Information Collection Clearance Officer, Department of Health and Human Services.

[FR Doc. 2012–16284 Filed 7–3–12; 8:45 am]

BILLING CODE 4151– AE–P

DEPARTMENT OF HEALTH AND HUMAN SERVICES

Renewal of Declaration Regarding Emergency Use of All Oral Formulations of Doxycycline Accompanied by Emergency Use Information

AGENCY: Office of the Secretary (OS), HHS.

ACTION: Notice.

SUMMARY: The Secretary of Homeland Security determined on September 23, 2008 that there is a significant potential for a domestic emergency involving a heightened risk of attack with a specified biological, chemical, radiological, or nuclear agent or agents—in this case, *Bacillus anthracis.* On the basis of that determination, and pursuant to section 564(b) of the Federal Food, Drug, and Cosmetic Act (''FD&C Act''), the Secretary of Health and Human Services is renewing her July 20, 2011 declaration of an emergency justifying the authorization of emergency use of all oral formulations of doxycycline accompanied by emergency use information subject to the terms of any authorization issued by the Commissioner of Food and Drugs under 21 U.S.C. 360bbb–3(a). This notice is being issued in accordance with section 564(b)(4) of the FD&C Act, 21 U.S.C. 360bbb–3(b)(4).

DATES: This Notice and referenced HHS declaration are effective as of June 28, 2012.

FOR FURTHER INFORMATION CONTACT: Nicole Lurie, MD, MSPH, Assistant Secretary for Preparedness and Response, Office of the Secretary, Department of Health and Human Services, 200 Independence Avenue SW., Washington, DC 20201, Telephone (202) 205–2882 (this is not a toll free number).

SUPPLEMENTARY INFORMATION: On September 23, 2008, former Secretary of Homeland Security, Michael Chertoff, determined that there is a significant potential for a domestic emergency, involving a heightened risk of attack with a specified biological, chemical, radiological, or nuclear agent or agents—in this case, *Bacillus anthracis*—although there is no current domestic emergency involving anthrax, no current heightened risk of an anthrax attack, and no credible information indicating an imminent threat of an attack involving *Bacillus anthracis.*

On October 1, 2008, on the basis of that determination, and pursuant to section 564(b) of the FD&C Act, 21 U.S.C. 360bbb–3(b), former Secretary of Health and Human Services, Michael O. Leavitt, declared an emergency justifying the emergency use of doxycycline hyclate tablets accompanied by emergency use information subject to the terms of any authorization issued under 21 U.S.C. 360bbb–3(a).[1] On October 1, 2009 and October 1, 2010, I renewed the former Secretary's declaration,[2] and on July 20, 2011, I renewed and amended the declaration to declare that the emergency justifies emergency use of all oral formulations of doxycycline accompanied by emergency use information subject to the terms of any authorization issued under 21 U.S.C. 360bbb–3(a).[3]

On the basis of the September 23, 2008 determination by the Secretary of Homeland Security and pursuant to section 564(b) of the FD&C Act, I hereby renew my July 20, 2011 declaration that the emergency justifies emergency use of all oral formulations of doxycycline accompanied by emergency use information subject to the terms of any authorization issued under 21 U.S.C. 360bbb–3(a). I am issuing this notice in accordance with section 564(b)(4) of the

[1] Pursuant to section 564(b)(4) of the FD&C Act, notice of the determination by the Secretary of Homeland Security and the declaration by the Secretary of Health and Human Services was provided at 73 FR 58242 (October 6, 2008).

[2] Pursuant to section 564(b)(4) of the FD&C Act, notices of the renewal of the declaration of the Secretary of Health and Human Services were provided at 74 FR 51,279 (Oct. 6, 2009) and 75 FR 61,489 (Oct. 5, 2010).

[3] Pursuant to section 564(b)(4) of the FD&C Act, notice of the renewal and amendment of the declaration of the Secretary of Health and Human Services was provided at 76 FR 44,926 (July 27, 2011).

Federal Food, Drug, and Cosmetic Act, 21 U.S.C. 360bbb–3(b)(4).

Dated: June 28, 2012.

Kathleen Sebelius,

Secretary.

[FR Doc. 2012–16531 Filed 7–3–12; 8:45 am]

BILLING CODE P

DEPARTMENT OF HEALTH AND HUMAN SERVICES

Administration for Children and Families

Proposed Information Collection Activity; Comment Request

Proposed Projects

Title: U.S. Repatriation Program Forms.

OMB No.: 0970–NEW.

Description: Description: The United States (U.S.) Repatriation Program was established by Title XI, Section 1113 of the Social Security Act (Assistance for U.S. Citizens Returned from Foreign Countries) to provide temporary assistance to U.S. citizens and their dependents who have been identified by the Department of State (DOS) as having returned, or been brought from a foreign country to the U.S. because of destitution, illness, war, threat of war, or a similar crisis, and are without available resources immediately accessible to meet their needs. The Secretary of the Department of Health and Human Services was provided with the authority to administer this Program. On or about 1994, this authority was delegated by the HHS Secretary to the Administration for Children and Families and later re-delegated to the Office of Refugee Resettlement. The Repatriation Program works with States, Federal agencies, and non-governmental organizations to provide eligible individuals with temporary assistance for up to 90-days. This assistance is in the form of a loan and must be repaid to the Federal Government.

The Program was later expanded in response to legislation enacted by Congress to address the particular needs of persons with mental illness (24 U.S.C. 321 through 329). Further refinements occurred in response to Executive Order (EO) 11490 (as amended) where HHS was given the responsibility to ''develop plans and procedures for assistance at ports of entry to U.S. personnel evacuated from overseas areas, their onward movement to final destination, and follow-up assistance after arrival at final destination.'' In addition, under EO 12656 (53 CFR 47491), ''Assignment of emergency preparedness responsibilities'', HHS was given the lead responsibility to develop plans and procedures in order to provide assistance to U.S. citizens or others evacuated from overseas areas.

Overall, the Program manages two major activities, Emergency and Non-emergency Repatriation Activities. The ongoing routine arrivals of individual repatriates and the repatriation of individuals with mental illness constitute the Program Non-emergency activities. Emergency activities are comprised of group repatriations (evacuations of 50–500 individuals) and emergency repatriations (evacuations of 500 or more individuals). Operationally, these activities involve different kinds of preparation, resources, and implementation. However, the core Program policies and administrative procedures are essentially the same.

1. *The U.S. Repatriation Program Emergency and Group Processing Form:* Under 45 CFR parts 211 and 212, ORR is to make findings setting forth the pertinent facts and conclusions according to established standards to determine whether an individual is an eligible person. This form allows authorized staff to gather necessary information to determine eligibility and to identify the services that need to be provided. This form is to be utilized during emergencies and group repatriations. Individuals interested in receiving Repatriation assistance will complete appropriate portions of this form. State personnel will utilize this form as a guide to perform an initial assessment and to identify the type of services an eligibility person might be able to receive. Furthermore, an authorized federal staff from the Administration for Children and Families (ACF) will make final eligibility determination by completing the appropriate section of this form.

2. *The U.S. Repatriation Program Privacy and Repayment Agreement Form:* Under 45 CFR parts 211 and 212, individuals who receive Program assistance are required to repay the federal government for the cost associated to the services received. This form authorizes ORR to release personal identifiable information to partners for the purpose of providing services to eligible repatriates. In addition, through this form eligible repatriates agree to accept services under the terms and conditions of the Program. Specifically, eligible repatriates commit to repay the federal government for all services received while in the Program. This form is to be completed by eligible repatriates or authorized legal custodian. Exception applies to minors and individuals eligible under 45 CFR part 211 when no legal custodian is identified.

3. *Relinquish Repatriation Services Form:* For individuals who are eligible to receive repatriation assistance but opt to relinquish services, this form is utilized to confirm and record repatriate's decision to refuse Program assistance. This form is to be completed by eligible repatriates or authorized legal custodian. Exception applies to minors and individuals eligible under 45 CFR part 211 when no legal custodian is identified.

4. *The U.S. Repatriation Program Emergency Reimbursement Form:* Under Section 1113 of the Social Security Act, ORR is authorized to provide temporary assistance directly or through utilization of the services and facilities of appropriate public or private agencies and organizations, in accordance with agreements providing for payment, in advance or by way of reimbursement, as may be determined by ORR. This form is to be utilized and completed by ORR partners to request reimbursement of reasonable and allowable costs, both administrative and actual temporary services, associated to services provided under the Program Emergency activities. For the purpose of this document, the word partner has the same meaning of ''agency.'' Definition is found under 45 CFR 212.1 (i).

5. *The U.S. Repatriation Program Non-emergency Reimbursement Form:* Under Section 1113 of the Social Security Act, ORR is authorized to provide temporary assistance directly or through utilization of the services and facilities of appropriate public or private agencies and organizations, in accordance with agreements providing for payment, in advance or by way of reimbursement, as may be determined by ORR. This form is to be utilized and completed by ORR partners to request reimbursement of reasonable and allowable costs, both administrative and actual temporary services, associated to services provided under the Program non-emergency activities.

6. *The U.S. Repatriation Program Financial Waiver Request Form:* Under 45 CFR parts 211 & 212 individuals who have received Repatriation assistance may be eligible to receive waivers and/or deferral if they fall within the repayment exceptions found with theses regulations. This form is to be completed by eligible repatriates or authorized legal custodian or state repatriation coordinator whenever appropriate. Exception applies to minors and individuals eligible under 45 CFR part 211 when no legal custodian is identified.

7. *The U.S. Repatriation Program Temporary Assistance Extension Request Form:* Under 45 CFR parts 211 & 212 temporary assistance may be furnished beyond the 90 days eligibility period if the individual falls within the eligibility requirements for an extension. This form is to be completed by the eligible repatriates or authorized legal custodian or state repatriation coordinator whenever appropriate. This form must be submitted to ORR or its authorized grantee 14 days prior to the 90 days eligibility period ends, unless the circumstances surrounding the case merits submission after the 14th day.

8. *The U.S. Repatriation Program Individual Case Management Report and Financial Claim Form:* Under Section 1113 of the Social Security Act, ORR is authorized to provide temporary assistance directly or through utilization of the services and facilities of appropriate public or private agencies and organizations, in accordance with agreements providing for payment, in advance or by way of reimbursement, as may be determined by ORR. This form is to be utilized and completed by ORR partners to request reimbursement of reasonable and allowable costs, both administrative and actual temporary services, and to provide individual case updates. This form is to be completed by the eligible individual case worker and/or service provider.

Respondents: Repatriation Program partners (e.g. States, federal agencies, non-governmental agencies, etc.) and individuals repatriated or evacuated by DOS from overseas. These respondents are authorized under Title XI, Section 1113 of the Social Security Act (42 U.S.C. 1313), Executive Order 12656 (amended by E.O. 13074, February 9, 1998; E.O. 13228, October 8, 2001; E.O. 13286, February 28, 2003), and 45 CFR parts 211 & 212.

ANNUAL BURDEN ESTIMATES

Instrument	Number of respondents	Number of responses per respondent	Average burden hours per response	Total burden hours
The U.S. Repatriation Program Emergency and Group Processing Form.	50 or more	1	0.15	7.5 or more.
The U.S. Repatriation Program Privacy and Repayment Agreement Form:	700 or more	1	0.10	70 or more.
Relinquish Repatriation Services Form	10 or more	1	0.05	0.5 or more.
The U.S. Repatriation Program Emergency Reimbursement Form:	4 or more	1	1	4 or more.
The U.S. Repatriation Program Non-emergency Reimbursement Form:	53 or more	1	0.30	17.9 or more.
The U.S. Repatriation Program Financial Waiver Request Form:	100 or more	1	1	100 or more.
The U.S. Repatriation Program Temporary Assistance Extension Request Form.	20 or more	1	.30	6 or more.
The U.S. Repatriation Program Individual Case Management Report and Financial Claim Form:	53 or more	1	1	53 or more.

Estimated Total Annual Burden Hours: 258.90

In compliance with the requirements of Section 506(c)(2)(A) of the Paperwork Reduction Act of 1995, the Administration for Children and Families is soliciting public comment on the specific aspects of the information collection described above. Copies of the proposed collection of information can be obtained and comments may be forwarded by writing to the Administration for Children and Families, Office of Planning, Research and Evaluation, 370 L'Enfant Promenade SW., Washington, DC 20447, Attn: ACF Reports Clearance Officer. Email address: *infocollection@acf.hhs.gov.* All requests should be identified by the title of the information collection.

The Department specifically requests comments on: (a) Whether the proposed collection of information is necessary for the proper performance of the functions of the agency, including whether the information shall have practical utility; (b) the accuracy of the agency's estimate of the burden of the proposed collection of information; (c) the quality, utility, and clarity of the information to be collected; and (d) ways to minimize the burden information to be collected; and (d) ways to minimize the burden of the collection of information on respondents, including through the use of automated collection techniques or other forms of information technology. Consideration will be given to comments and suggestions submitted within 60 days of this publication.

Robert Sargis,

Reports Clearance Officer.

[FR Doc. 2012–16285 Filed 7–3–12; 8:45 am]

BILLING CODE 4184–01–P

DEPARTMENT OF HEALTH AND HUMAN SERVICES

Food and Drug Administration

[Docket No. FDA–2012–D–0529]

Draft Guidance for Industry on Organ-Specific Warnings: Internal Analgesic, Antipyretic, and Antirheumatic Drug Products for Over-the-Counter Human Use—Labeling for Products That Contain Acetaminophen; Availability

AGENCY: Food and Drug Administration, HHS.

ACTION: Notice.

SUMMARY: The Food and Drug Administration (FDA) is announcing the availability of a draft guidance for industry entitled ''Organ-Specific Warnings: Internal Analgesic, Antipyretic, and Antirheumatic Drug Products for Over-the-Counter Human Use—Labeling for Products That Contain Acetaminophen.'' The draft guidance is intended to inform manufacturers of certain over-the-counter (OTC) internal analgesic, antipyretic, and antirheumatic (IAAA) drug products that contain

acetaminophen of the circumstances in which FDA intends to exercise enforcement discretion with regard to the liver warning required in the labeling.

DATES: Although you can comment on any guidance at any time (see 21 CFR 10.115(g)(5)), to ensure that the Agency considers your comment on this draft guidance before it begins work on the final version of the guidance, submit either electronic or written comments on the draft guidance by September 4, 2012.

ADDRESSES: Submit written requests for single copies of the draft guidance to the Division of Drug Information, Center for Drug Evaluation and Research, Food and Drug Administration, 10903 New Hampshire Ave., Bldg. 51, rm. 2201, Silver Spring, MD 20993–0002. Send one self-addressed adhesive label to assist that office in processing your requests. See the **SUPPLEMENTARY INFORMATION** section for electronic access to the draft guidance document.

Submit electronic comments on the draft guidance to *http://www.regulations.gov.* Submit written comments to the Division of Dockets Management (HFA–305), Food and Drug Administration, 5630 Fishers Lane, Rm. 1061, Rockville, MD 20852.

FOR FURTHER INFORMATION CONTACT: Tina Walther, Center for Drug Evaluation and Research, Food and Drug Administration, 10903 New Hampshire Ave., Bldg. 51, rm. 5108, Silver Spring, MD 20993–0002, 301–796–5086.

SUPPLEMENTARY INFORMATION:

I. Background

FDA is announcing the availability of a draft guidance for industry entitled ''Organ-Specific Warnings: Internal Analgesic, Antipyretic, and Antirheumatic Drug Products for Over-the-Counter Human Use—Labeling for Products That Contain Acetaminophen.'' In the **Federal Register** of December 26, 2006 (71 FR 77314), FDA published a proposed rule on organ-specific warnings and related labeling for OTC IAAA drug products. In the **Federal Register** of April 29, 2009 (74 FR 19385), FDA published the final rule (2009 final rule). In the **Federal Register** of November 25, 2009 (74 FR 61512), FDA published a technical amendment to clarify several provisions in response to industry feedback. The 2009 final rule, as amended, changed some of the labeling requirements for OTC IAAA drug products to inform consumers about the risk of liver injury when using acetaminophen and the risk of stomach bleeding when using nonsteroidal anti-inflammatory drugs. It went into effect April 29, 2010.

The labeling for OTC IAAA products that contain acetaminophen and are labeled for adults only, must include the following liver warning:

> **Liver warning:** This product contains acetaminophen. Severe liver damage may occur if you take • more than [insert maximum number of daily dosage units] in 24 hours, which is the maximum daily amount [optional: ''For this product''] • with other drugs containing acetaminophen • 3 or more alcoholic drinks every day while using this product.

Although the currently proposed total daily dose of acetaminophen is 4,000 milligrams (mg), some OTC IAAA products that contain acetaminophen have directions for use that provide a maximum daily dose of acetaminophen for the product that is less than 4,000 mg. For example, for some OTC IAAA drug products that contain both acetaminophen and one or more other active ingredients, the maximum number of daily dosage units might be limited by an active ingredient other than acetaminophen, which could result in a maximum daily dose of acetaminophen that is less than 4,000 mg for that product. The optional statement, ''for this product,'' in the first bullet of the liver warning is intended to address these situations, by clarifying that the maximum number of daily dosage units for a product might not reflect the maximum daily dose of acetaminophen.

However, the Agency understands that in certain circumstances, despite this optional statement, the wording of the first bulleted warning might be interpreted as indicating that severe liver damage is associated with a total daily dose of acetaminophen that is less than 4,000 mg. This suggestion is not the intent of the requirement that the liver warning be included in the labeling. To address this potential confusion, the Agency intends to exercise enforcement discretion with respect to the liver warning required in the circumstances described in this draft guidance.

This draft guidance is being issued consistent with FDA's good guidance practices regulation (21 CFR 10.115). The draft guidance, when finalized, will represent the Agency's current thinking on this topic. It does not create or confer any rights for or on any person and does not operate to bind FDA or the public. An alternative approach may be used if such approach satisfies the requirements of the applicable statutes and regulations.

II. Comments

Interested persons may submit to the Division of Dockets Management (see **ADDRESSES**) either electronic or written comments regarding this document. It is only necessary to send one set of comments. Identify comments with the docket number found in brackets in the heading of this document. Received comments may be seen in the Division of Dockets Management between 9 a.m. and 4 p.m., Monday through Friday.

III. Electronic Access

Persons with access to the Internet may obtain the document at either *http://www.fda.gov/Drugs/GuidanceComplianceRegulatoryInformation/Guidances/default.htm* or *http://www.regulations.gov.*

Dated: June 21, 2012.

Leslie Kux,

Assistant Commissioner for Policy.

[FR Doc. 2012–16244 Filed 7–3–12; 8:45 am]

BILLING CODE 4160–01–P

DEPARTMENT OF HEALTH AND HUMAN SERVICES

Health Resources and Services Administration

Agency Information Collection Activities: Proposed Collection: Comment Request

In compliance with the requirement for opportunity for public comment on proposed data collection projects (section 3506(c) (2) (A) of Title 44, United States Code, as amended by the Paperwork Reduction Act of 1995, Pub. L. 104–13), the Health Resources and Services Administration (HRSA) publishes periodic summaries of proposed projects being developed for submission to the Office of Management and Budget (OMB) under the Paperwork Reduction Act of 1995. To request more information on the proposed project or to obtain a copy of the data collection plans and draft instruments, email *paperwork@hrsa.gov* or call the HRSA Reports Clearance Officer at (301) 443–1984.

Comments are invited on: (a) The proposed collection of information for the proper performance of the functions of the Agency; (b) the accuracy of the Agency's estimate of the burden of the proposed collection of information; (c) ways to enhance the quality, utility, and clarity of the information to be collected; and (d) ways to minimize the burden of the collection of information on respondents, including through the use of automated collection techniques

or other forms of information technology.

Proposed Project: Health Center Controlled Networks (OMB No. 0915–xxxx)—[New]

One goal of the Health Resources and Services Administration (HRSA) is to ensure that all Health Center program grantees effectively implement health information technology (HIT) systems that enable all providers to become meaningful users of HIT, including Electronic Health Records (EHRs), and use those systems to increase access to care, improve quality of care, and reduce the costs of care delivered. The Health Center Controlled Network (HCCN) program serves as a major component of HRSA's HIT initiative to support these goals. The HCCN model focuses on the integration of certain functions and the sharing of skills, resources, and data to improve health center operations and care provision, and generating efficiencies and economies of scale. Through this grant, HCCNs will provide support for the adoption, implementation, and meaningful use of Health Information Technology (HIT) to improve the quality of care provided by existing Health Center Program grantees (i.e., Section 330 funded health centers) by engaging in the following program components:

- *Adoption and Implementation:* Assist participating health centers with effectively adopting and implementing certified EHR technology.
- *Meaningful Use:* Support participating health centers in meeting Meaningful Use requirements and accessing incentive payments under the Medicare and Medicaid Electronic Health Records Incentive Programs.
- *Quality Improvement:* Advance participating health centers' QI initiatives to improve clinical and operational quality, including Patient Centered Medical Home (PCMH) recognition.

HRSA plans to collect and evaluate network outcome measures. HRSA plans to require that HCCNs report such measures to HRSA in annual work plan updates as part of their annual, non-competing continuation progress reports through an electronic reporting system. The work plan updates will include information on grantees' plans and progress on the following:

- Adoption and Implementation of HIT (including EHR);
- Attainment of Meaningful Use Requirements; and
- Quality improvement measures (e.g., Healthy People 2020 clinical quality measures, PCMH recognition status, etc.).

The annual, non-competing continuation progress reports will describe each grantee's progress in achieving key activity goals such as quality improvement, data access and exchange, efficiency and effectiveness of network services, and the ability to track and monitor patient outcomes, as well as emerging needs, challenges and barriers encountered customer satisfaction, and plans to meet goals for the next year. Grantees will submit their work plan updates and annual, non-competing continuation progress report each fiscal year of the grant; the submission and subsequent HRSA approval of each report triggers the budget period renewal and release of each subsequent year of funding. The estimated total number of burden hours is 750.

The annual estimate of burden is as follows:

Instrument	Number of respondents	Responses per respondent	Total responses	Hours per response	Total burden hours
Work Plan Update	30	1	30	5	150
Annual Progress Report/Interim Evaluation Progress Report	30	1	30	20	600
Total	60				750

Email comments to *paperwork@hrsa.gov* or mail the HRSA Reports Clearance Officer, Room 10–29, Parklawn Building, 5600 Fishers Lane, Rockville, MD 20857. Written comments should be received within 60 days of this notice.

Dated: June 28, 2012.

Reva Harris,

Acting Director, Division of Policy and Information Coordination.

[FR Doc. 2012–16332 Filed 7–3–12; 8:45 am]

BILLING CODE 4165–15–P

DEPARTMENT OF HEALTH AND HUMAN SERVICES

National Institutes of Health

Eunice Kennedy Shriver National Institute of Child Health & Human Development; Notice of Closed Meeting

Pursuant to section 10(d) of the Federal Advisory Committee Act, as amended (5 U.S.C. App.), notice is hereby given of the following meeting.

The meeting will be closed to the public in accordance with the provisions set forth in sections 552b(c)(4) and 552b(c)(6), Title 5 U.S.C., as amended. The contract proposal and the discussions could disclose confidential trade secrets or commercial property such as patentable material, and personal information concerning individuals associated with the contract proposal, the disclosure of which would constitute a clearly unwarranted invasion of personal privacy.

Name of Committee: National Institute of Child Health and Human Development Special Emphasis Panel; National Children's Study Vanguard 2.0.

Date: July 23, 2012.

Time: 8:00 a.m. to 5:00 p.m.

Agenda: To review and evaluate grant applications.

Place: Embassy Suites at the Chevy Chase Pavilion, 4300 Military Road NW., Washington, DC 20015.

Contact Person: Sathasiva B. Kandasamy, Ph.D., Scientific Review Officer, Division of Scientific Review, National Institute Of Child Health and Human Development, 6100 Executive Boulevard, Rockville, MD 20892–9304, (301) 435–6680, *skandasa@mail.nih.gov.*

This notice is being published less than 15 days prior to the meeting due to the timing limitations imposed by the review and funding cycle.

(Catalogue of Federal Domestic Assistance Program Nos. 93.864, Population Research; 93.865, Research for Mothers and Children; 93.929, Center for Medical Rehabilitation Research; 93.209, Contraception and Infertility Loan Repayment Program, National Institutes of Health, HHS)

Dated: June 27, 2012.

Director, Office of Federal Advisory Committee Policy.

[FR Doc. 2012–16350 Filed 7–3–12; 8:45 am]

BILLING CODE 4140–01–P

DEPARTMENT OF HEALTH AND HUMAN SERVICES

National Institutes of Health

National Institute on Alcohol Abuse and Alcoholism; Notice of Closed Meetings

Pursuant to section 10(d) of the Federal Advisory Committee Act, as amended (5 U.S.C. App.), notice is hereby given of the following meetings.

The meetings will be closed to the public in accordance with the provisions set forth in sections 552b(c)(4) and 552b(c)(6), Title 5 U.S.C., as amended. The grant applications and the discussions could disclose confidential trade secrets or commercial property such as patentable material, and personal information concerning individuals associated with the grant applications, the disclosure of which would constitute a clearly unwarranted invasion of personal privacy.

Name of Committee: National Institute on Alcohol Abuse and Alcoholism Special Emphasis Panel; Review of RFA AA–12–010.

Date: July 18, 2012.

Time: 1:00 p.m. to 4:00 p.m.

Agenda: To review and evaluate grant applications.

Place: NIH, 5635 Fishers Lane, Rockville, MD 20852, (Telephone Conference Call).

Contact Person: Ranga Srinivas, Ph.D., Chief, Extramural Project Review Branch EPRB, NIAAA, National Institutes of Health, 5365 Fishers Lane, Room 2085, Rockville, MD 20852, (301) 451–2067, *srinivar@mail.nih.gov.*

Name of Committee: National Institute on Alcohol Abuse and Alcoholism Special Emphasis Panel; NIAAA Member conflict SEP—Neurosciences.

Date: July 25, 2012.

Time: 1:00 p.m. to 4:00 p.m.

Agenda: To review and evaluate grant applications.

Place: National Institutes of Health, MSC9304, 5635 Fishers Lane, Rockville, MD 20852, (Telephone Conference Call).

Contact Person: Ranga Srinivas, Ph.D., Chief, Extramural Project Review Branch EPRB, NIAAA, National Institutes of Health, 5365 Fishers Lane, Room 2085, Rockville, MD 20852, (301) 451–2067, *srinivar@mail.nih.gov.*

Name of Committee: National Institute on Alcohol Abuse and Alcoholism Special Emphasis Panel; NIAAA Member Conflict Reviews—Biosciences.

Date: July 30, 2012.

Time: 1:00 p.m. to 4:00 p.m.

Agenda: To review and evaluate grant applications.

Place: National Institutes of Health, 5635 Fishers Lane, Rockville, MD 20852, (Telephone Conference Call).

Contact Person: Ranga Srinivas, Ph.D., Chief, Extramural Project Review Branch EPRB, NIAAA, National Institutes of Health, 5365 Fishers Lane, Room 2085, Rockville, MD 20852, (301) 451–2067, *srinivar@mail.nih.gov.*

Name of Committee: National Institute on Alcohol Abuse and Alcoholism Special Emphasis Panel; NIAAA Member Conflict applications Clinical and Treatment Related Applications.

Date: August 2, 2012.

Time: 1:00 p.m. to 4:00 p.m.

Agenda: To review and evaluate grant applications.

Place: National Institutes of Health, 5635 Fishers Lane, Rockville, MD 20852, (Telephone Conference Call).

Contact Person: Ranga Srinivas, Ph.D., Chief, Extramural Project Review Branch EPRB, NIAAA, National Institutes of Health, 5365 Fishers Lane, Room 2085, Rockville, MD 20852, (301) 451–2067, *srinivar@mail.nih.gov.*

(Catalogue of Federal Domestic Assistance Program Nos. 93.271, Alcohol Research Career Development Awards for Scientists and Clinicians; 93.272, Alcohol National Research Service Awards for Research Training; 93.273, Alcohol Research Programs; 93.891, Alcohol Research Center Grants; 93.701, ARRA Related Biomedical Research and Research Support Awards., National Institutes of Health, HHS)

Dated: June 26, 2012.

Jennifer S. Spaeth,

Director, Office of Federal Advisory Committee Policy.

[FR Doc. 2012–16340 Filed 7–3–12; 8:45 am]

BILLING CODE 4140–01–P

DEPARTMENT OF HEALTH AND HUMAN SERVICES

National Institutes of Health

National Cancer Institute; Notice of Closed Meetings

Pursuant to section 10(d) of the Federal Advisory Committee Act, as amended (5 U.S.C. App.), notice is hereby given of the following meetings.

The meetings will be closed to the public in accordance with the provisions set forth in sections 552b(c)(4) and 552b(c)(6), Title 5 U.S.C., as amended. The grant applications and the discussions could disclose confidential trade secrets or commercial property such as patentable material, and personal information concerning individuals associated with the grant applications, the disclosure of which would constitute a clearly unwarranted invasion of personal privacy.

Name of Committee: National Cancer Institute Special Emphasis Panel; Feasibility Studies for Collaborative Interaction for Minority Institution/Cancer Center Partnership.

Date: July 10–11, 2012.

Time: 7 p.m. to 3 p.m.

Agenda: To review and evaluate grant applications.

Place: Bethesda North Marriott Hotel & Conference Center, 5701 Marinelli Road, Bethesda, MD 20852.

Contact Person: Gerald G. Lovinger, Ph.D., Scientific Review Officer, Special Review and Logistics Branch, Division of Extramural Activities, National Cancer Institute, NIH, 6116 Executive Blvd., Room 8101, Bethesda, MD 20892–8329, 301–496–7987, *lovingeg@mail.nih.gov.*

This notice is being published less than 15 days prior to the meeting due to the timing limitations imposed by the review and funding cycle.

Name of Committee: National Cancer Institute Special Emphasis Panel; R13 Application Review.

Date: July 17, 2012.

Time: 1 p.m. to 5 p.m.

Agenda: To review and evaluate grant applications.

Place: National Institutes of Health, 6120 Executive Blvd., Rockville, MD 20852, (Telephone Conference Call).

Contact Person: Bratin K. Saha, Ph.D., Scientific Review Officer, Program Coordination and Referral Branch, Division of Extramural Activities, National Cancer Institute, NIH, 6116 Executive Boulevard, Room 8041, Bethesda, MD 20892, 301–402–0371, *sahab@mail.nih.gov.*

This notice is being published less than 15 days prior to the meeting due to the timing limitations imposed by the review and funding cycle.

Name of Committee: National Cancer Institute Special Emphasis Panel; R01 and R03 Grant Applications.

Date: July 17, 2012.

Time: 2:30 p.m. to 4 p.m.

Agenda: To review and evaluate grant applications.

Place: National Institutes of Health, National Cancer Institute, 6116 Executive Boulevard, Rockville, MD 20852, (Telephone Conference Call).

Contact Person: Olivia Bartlett, Ph.D., Chief, Research Programs Review Branch, Division of Extramural Activities, National Cancer Institute, NIH, 6116 Executive Blvd., Room 8121, Bethesda, MD 20892–7405, 301–594–2501, *op2t@nih.gov.*

This notice is being published less than 15 days prior to the meeting due to the timing limitations imposed by the review and funding cycle.

Name of Committee: National Cancer Institute Special Emphasis Panel; Institutional Training and Education Grants.

Date: July 24, 2012.

Time: 11:00 a.m. to 2:00 p.m.

Agenda: To review and evaluate grant applications.

Place: National Institutes of Health, National Cancer Institute, 6116 Executive Boulevard, Room 707, Rockville, MD 20852, (Telephone Conference Call).

Contact Person: Timothy C. Meeker, MD, Ph.D., Scientific Review Officer, Resources

and Training Review Branch, Division of Extramural Activities, National Cancer Institute, NIH, 6116 Executive Boulevard, Room 8103, Bethesda, MD 20892, (301) 594–1279, *meekert@mail.nih.gov.*

Information is also available on the Institute's/Center's home page: *http://deainfo.nci.nih.gov/advisory/sep/sep.htm,* where an agenda and any additional information for the meeting will be posted when available.

(Catalogue of Federal Domestic Assistance Program Nos. 93.392, Cancer Construction; 93.393, Cancer Cause and Prevention Research; 93.394, Cancer Detection and Diagnosis Research; 93.395, Cancer Treatment Research; 93.396, Cancer Biology Research; 93.397, Cancer Centers Support; 93.398, Cancer Research Manpower; 93.399, Cancer Control, National Institutes of Health, HHS)

Dated: June 26, 2012.

Jennifer S. Spaeth,

Director, Office of Federal Advisory Committee Policy.

[FR Doc. 2012–16339 Filed 7–3–12; 8:45 am]

BILLING CODE 4140–01–P

DEPARTMENT OF HEALTH AND HUMAN SERVICES

National Institutes of Health

National Institute of General Medical Sciences; Notice of Closed Meeting

Pursuant to section 10(d) of the Federal Advisory Committee Act, as amended (5 U.S.C. App.), notice is hereby given of the following meeting.

The meeting will be closed to the public in accordance with the provisions set forth in sections 552b(c)(4) and 552b(c)(6), Title 5 U.S.C., as amended. The grant applications and the discussions could disclose confidential trade secrets or commercial property such as patentable material, and personal information concerning individuals associated with the grant applications, the disclosure of which would constitute a clearly unwarranted invasion of personal privacy.

Name of Committee: National Institute of General Medical Sciences Special Emphasis Panel, Complex Phenotypes.

Date: July 24, 2012.

Time: 10 a.m. to 5 p.m.

Agenda: To review and evaluate grant applications.

Place: National Institutes of Health, Natcher Building, 45 Center Drive, Room 3An12, Bethesda, MD 20892, (Virtual Meeting).

Contact Person: Lisa A. Dunbar, Ph.D., Scientific Review Officer, Office of Scientific Review, National Institute of General Medical Sciences, National Institutes of Health, 45 Center Drive, Room 3An12, Bethesda, MD 20892, 301–594–2849, *dunbarl@mail.nih.gov.*

(Catalogue of Federal Domestic Assistance Program Nos. 93.375, Minority Biomedical Research Support; 93.821, Cell Biology and Biophysics Research; 93.859, Pharmacology, Physiology, and Biological Chemistry Research; 93.862, Genetics and Developmental Biology Research; 93.88, Minority Access to Research Careers; 93.96, Special Minority Initiatives, National Institutes of Health, HHS)

Dated: June 26, 2012.

Jennifer S. Spaeth,

Director, Office of Federal Advisory Committee Policy.

[FR Doc. 2012–16338 Filed 7–3–12; 8:45 am]

BILLING CODE 4140–01–P

DEPARTMENT OF HEALTH AND HUMAN SERVICES

National Institutes of Health

National Institute of Arthritis and Musculoskeletal and Skin Diseases; Notice of Closed Meeting

Pursuant to section 10(d) of the Federal Advisory Committee Act, as amended (5 U.S.C. App.), notice is hereby given of the following meeting.

The meeting will be closed to the public in accordance with the provisions set forth in sections 552b(c)(4) and 552b(c)(6), Title 5 U.S.C., as amended. The grant applications and the discussions could disclose confidential trade secrets or commercial property such as patentable material, and personal information concerning individuals associated with the grant applications, the disclosure of which would constitute a clearly unwarranted invasion of personal privacy.

Name of Committee: National Institute of Arthritis and Musculoskeletal and Skin Diseases, Special Emphasis Panel, Clinical Trials Applications.

Date: July 25, 2012.

Time: 11 a.m. to 4 p.m.

Agenda: To review and evaluate grant applications.

Place: National Institutes of Health, One Democracy Plaza, 6701 Democracy Boulevard, Bethesda, MD 20892, (Telephone Conference Call).

Contact Person: Helen Lin, Ph.D., Scientific Review Officer, National Institute of Arthritis, Musculoskeletal and Skin Diseases, National Institutes of Health, 6701 Democracy Blvd., Suite 800, MSC 4872, Bethesda, MD 20892, 301–594–4952, *linh1@mail.nih.gov.*

(Catalogue of Federal Domestic Assistance Program Nos. 93.846, Arthritis, Musculoskeletal and Skin Diseases Research, National Institutes of Health, HHS)

Dated: June 25, 2012.

Jennifer S. Spaeth,

Director, Office of Federal Advisory Committee Policy.

[FR Doc. 2012–16337 Filed 7–3–12; 8:45 am]

BILLING CODE 4140–01–P

DEPARTMENT OF HEALTH AND HUMAN SERVICES

National Institutes of Health

National Cancer Institute; Notice of Closed Meeting

Pursuant to section 10(d) of the Federal Advisory Committee Act, as amended (5 U.S.C. App.), notice is hereby given of the following meeting.

The meeting will be closed to the public in accordance with the provisions set forth in sections 552b(c)(4) and 552b(c)(6), Title 5 U.S.C., as amended. The grant applications and the discussions could disclose confidential trade secrets or commercial property such as patentable material, and personal information concerning individuals associated with the grant applications, the disclosure of which would constitute a clearly unwarranted invasion of personal privacy.

Name of Committee: National Cancer Institute Initial Review Group, Subcommittee A—Cancer Centers.

Date: August 3, 2012.

Time: 8:00 a.m. to 4:50 p.m.

Agenda: To review and evaluate grant applications.

Place: Doubletree Hotel Bethesda, (Formerly Holiday Inn Select), 8120 Wisconsin Avenue, Bethesda, MD 20814.

Contact Person: Gail J. Bryant, MD, Medical Officer, Resources and Training Review Branch, Division of Extramural Activities, National Cancer Institute, NIH, 6116 Executive Blvd., Room 8107, MSC 8328, Bethesda, MD 20892–8328, (301) 402–0801, *gb30t@nih.gov.*

Information is also available on the Institute's/Center's home page: *http://deainfo.nci.nih.gov/advisory/irg/irg.htm,* where an agenda and any additional information for the meeting will be posted when available.

(Catalogue of Federal Domestic Assistance Program Nos. 93.392, Cancer Construction; 93.393, Cancer Cause and Prevention Research; 93.394, Cancer Detection and Diagnosis Research; 93.395, Cancer Treatment Research; 93.396, Cancer Biology Research; 93.397, Cancer Centers Support; 93.398, Cancer Research Manpower; 93.399, Cancer Control, National Institutes of Health, HHS)

Dated: June 26, 2012.

Jennifer S. Spaeth,

Director, Office of Federal Advisory Committee Policy.

[FR Doc. 2012–16336 Filed 7–3–12; 8:45 am]

BILLING CODE 4140–01–P

DEPARTMENT OF HEALTH AND HUMAN SERVICES

National Institutes of Health

National Library of Medicine; Notice of Meetings

Pursuant to section 10(d) of the Federal Advisory Committee Act, as amended (5 U.S.C. App), notice is hereby given of meetings of the Board of Regents of the National Library of Medicine.

The meeting will be open to the public as indicated below, with attendance limited to space available. Individuals who plan to attend and need special assistance, such as sign language interpretation or other reasonable accommodations, should notify the Contact Person listed below in advance of the meeting.

The meeting will be closed to the public in accordance with the provisions set forth in sections 552b(c)(4) and 552b(c)(6), Title 5 U.S.C., as amended. The grant applications and the discussions could disclose confidential trade secrets or commercial property such as patentable materials, and personal information concerning individuals associated with the grant applications, the disclosure of which would constitute a clearly unwarranted invasion of personal privacy.

Name of Committee: Board of Regents of the National Library of Medicine; Extramural Programs Subcommittee.
Date: September 10, 2012.
Closed: 2:30 p.m. to 4 p.m.
Agenda: To review and evaluate grant applications.
Place: National Library of Medicine, Building 38, 2nd Floor, Conference Room B, 8600 Rockville Pike, Bethesda, MD 20892.
Contact Person: Donald A.B. Lindberg, M.D., Director, National Library of Medicine, 8600 Rockville Pike, Bethesda, MD 20892, 301–496–6221, *lindberg@mail.nih.gov.*

Name of Committee: Board of Regents of the National Library of Medicine; Subcommittee on Outreach and Public Information.
Date: September 11, 2012.
Open: 7:45 a.m. to 8:45 a.m.
Agenda: To review and discuss outreach activities.
Place: National Library of Medicine, Building 38, 2nd Floor, Conference Room B, 8600 Rockville Pike, Bethesda, MD 20892.
Contact Person: Donald A.B. Lindberg, M.D., Director, National Library of Medicine, 8600 Rockville Pike, Bethesda, MD 20892, 301–496–6221, *lindberg@mail.nih.gov.*

Name of Committee: Board of Regents of the National Library of Medicine.
Date: September 11–12, 2012.
Open: September 11, 2012, 9 a.m. to 4:10 p.m.
Agenda: Program Discussion.
Place: National Library of Medicine, Building 38, 2nd Floor, Board Room, 8600 Rockville Pike, Bethesda, MD 20892.
Closed: September 11, 2012, 4:10 p.m. to 4:30 p.m.
Agenda: To review and evaluate grant applications.
Place: National Library of Medicine, Building 38, 2nd Floor, Board Room, 8600 Rockville Pike, Bethesda, MD 20892.
Open: September 12, 2012, 9 a.m. to 12 p.m.
Agenda: Program Discussion.
Place: National Library of Medicine, Building 38, 2nd Floor, Board Room, 8600 Rockville Pike, Bethesda, MD 20892.
Contact Person: Donald A.B. Lindberg, M.D., Director, National Library of Medicine, 8600 Rockville Pike, Bethesda, MD 20892, 301–496–6221, *lindberg@mail.nih.gov.*

Any interested person may file written comments with the committee by forwarding the statement to the Contact Person listed on this notice. The statement should include the name, address, telephone number and, when applicable, the business or professional affiliation of the interested person.

In the interest of security, NIH has instituted stringent procedures for entrance onto the NIH campus. All visitor vehicles, including taxicabs, hotel, and airport shuttles will be inspected before being allowed on campus. Visitors will be asked to show one form of identification (for example, a government-issued photo ID, driver's license, or passport) and to state the purpose of their visit.

Information is also available on the Institute's/Center's home page: *www.nlm.nih.gov/od/bor/bor.html,* where an agenda and any additional information for the meeting will be posted when available

(Catalogue of Federal Domestic Assistance Program No. 93.879, Medical Library Assistance, National Institutes of Health, HHS)

Dated: June 26, 2012.

Jennifer S. Spaeth,

Office of Federal Advisory Committee Policy.

[FR Doc. 2012–16330 Filed 7–3–12; 8:45 am]

BILLING CODE 4140–01–P

DEPARTMENT OF HEALTH AND HUMAN SERVICES

National Institutes of Health

National Library of Medicine; Notice of Meeting

Pursuant to section 10(a) of the Federal Advisory Committee Act, as amended (5 U.S.C. App), notice is hereby given of a meeting of the Board of Scientific Counselors, National Center for Biotechnology Information.

The meeting will be open to the public as indicated below, with attendance limited to space available. Individuals who plan to attend and need special assistance, such as sign language interpretation or other reasonable accommodations, should notify the Contact Person listed below in advance of the meeting.

The meeting will be closed to the public as indicated below in accordance with the provisions set forth in section 552b(c)(6), Title 5 U.S.C., as amended for review, discussion, and evaluation of individual intramural programs and projects conducted by the *National Library of Medicine,* including consideration of personnel qualifications and performance, and the competence of individual investigators, the disclosure of which would constitute a clearly unwarranted invasion of personal privacy.

Name of Committee: Board of Scientific Counselors, National Center for Biotechnology Information.
Date: November 13, 2012.
Open: 8:30 a.m. to 12:00 p.m.
Agenda: Program Discussion.
Place: National Library of Medicine, Building 38, 2nd Floor, Board Room, 8600 Rockville Pike, Bethesda, MD 20892.
Closed: 12:00 p.m. to 2:00 p.m.
Agenda: To review and evaluate personal qualifications and performance, and competence of individual investigators.
Place: National Library of Medicine, Building 38, 2nd Floor, Board Room, 8600 Rockville Pike, Bethesda, MD 20892.
Open: 2:00 p.m. to 3:00 p.m.
Agenda: Program Discussion.
Place: National Library of Medicine, Building 38, 2nd Floor, Board Room, 8600 Rockville Pike, Bethesda, MD 20892.
Contact Person: David J. Lipman, M.D., Director, National Center of Biotechnology Information, National Library of Medicine, Department of Health and Human Services, Building 38A, Room 8N805, Bethesda, MD 20892, 301–435–5985, *dlipman@mail.nih.gov.*

Any interested person may file written comments with the committee by forwarding the statement to the Contact Person listed on this notice. The statement should include the name, address, telephone number and when applicable, the business or professional affiliation of the interested person.

In the interest of security, NIH has instituted stringent procedures for entrance onto the NIH campus. All visitor vehicles, including taxicabs, hotel, and airport shuttles will be inspected before being allowed on campus. Visitors will be asked to show one form of identification (for example, a government-issued photo ID, driver's license, or passport) and to state the purpose of their visit.

(Catalogue of Federal Domestic Assistance Program No. 93.879, Medical Library Assistance, National Institutes of Health, HHS)

Dated: June 27, 2012.

Jennifer S. Spaeth,

Director, Office of Federal Advisory Committee Policy.

[FR Doc. 2012–16358 Filed 7–3–12; 8:45 am]

BILLING CODE 4140–01–P

DEPARTMENT OF HEALTH AND HUMAN SERVICES

National Institutes of Health

National Heart, Lung, and Blood Institute; Notice of Closed Meeting

Pursuant to section 10(d) of the Federal Advisory Committee Act, as amended (5 U.S.C. App.), notice is hereby given of the following meeting.

The meeting will be closed to the public in accordance with the provisions set forth in sections 552b(c)(4) and 552b(c)(6), Title 5 U.S.C., as amended. The grant applications and the discussions could disclose confidential trade secrets or commercial property such as patentable material, and personal information concerning individuals associated with the grant applications, the disclosure of which would constitute a clearly unwarranted invasion of personal privacy.

Name of Committee: National Heart, Lung, and Blood Institute Special Emphasis Panel Resource Related Research Project for Molecular Imaging.

Date: July 25, 2012.

Time: 1:00 p.m. to 3:00 p.m.

Agenda: To review and evaluate grant applications.

Place: National Institutes of Health, 6701 Rockledge Drive, Bethesda, MD 20892, (Telephone Conference Call).

Contact Person: Melissa E. Nagelin, Ph.D., Scientific Review Officer, Office of Scientific Review/DERA, National Heart, Lung, and Blood Institute, 6701 Rockledge Drive, Rm. 7202, Bethesda, MD 20892, 301–435–0297, *nagelinmh2@nhlbi.nih.gov.*

(Catalogue of Federal Domestic Assistance Program Nos. 93.233, National Center for Sleep Disorders Research; 93.837, Heart and Vascular Diseases Research; 93.838, Lung Diseases Research; 93.839, Blood Diseases and Resources Research, National Institutes of Health, HHS)

Dated: June 27, 2012.

Jennifer S. Spaeth,

Director, Office of Federal Advisory Committee Policy.

[FR Doc. 2012–16357 Filed 7–3–12; 8:45 am]

BILLING CODE 4140–01–P

DEPARTMENT OF HEALTH AND HUMAN SERVICES

National Institutes of Health

National Institute on Alcohol Abuse and Alcoholism; Notice of Closed Meeting

Pursuant to section 10(d) of the Federal Advisory Committee Act, as amended (5 U.S.C. App.), notice is hereby given of the following meeting.

The meeting will be closed to the public in accordance with the provisions set forth in sections 552b(c)(4) and 552b(c)(6), Title 5 U.S.C., as amended. The grant applications and the discussions could disclose confidential trade secrets or commercial property such as patentable material, and personal information concerning individuals associated with the grant applications, the disclosure of which would constitute a clearly unwarranted invasion of personal privacy.

Name of Committee: National Institute on Alcohol Abuse and Alcoholism Special Emphasis Panel, Review of RFA AA–12–009.

Date: July 17–19, 2012.

Time: 10:00 a.m. to 5:00 p.m.

Agenda: To review and evaluate grant applications.

Place: National Institutes of Health, 5635 Fishers Lane, Rockville, MD 20852 (Virtual Meeting).

Contact Person: Ranga Srinivas, Ph.D., Chief, Extramural Project Review Branch EPRB, NIAAA, National Institutes of Health, 5365 Fishers Lane, Room 2085, Rockville, MD 20852 (301) 451–2067, *srinivar@mail.nih.gov.*

(Catalogue of Federal Domestic Assistance Program Nos. 93.271, Alcohol Research Career Development Awards for Scientists and Clinicians; 93.272, Alcohol National Research Service Awards for Research Training; 93.273, Alcohol Research Programs; 93.891, Alcohol Research Center Grants; 93.701, ARRA Related Biomedical Research and Research Support Awards., National Institutes of Health, HHS)

Dated: June 26, 2012.

Jennifer S. Spaeth,

Director, Office of Federal Advisory Committee Policy.

[FR Doc. 2012–16356 Filed 7–3–12; 8:45 am]

BILLING CODE 4140–01–P

DEPARTMENT OF HEALTH AND HUMAN SERVICES

National Institutes of Health

National Institute of Diabetes and Digestive and Kidney Diseases; Notice of Closed Meeting

Pursuant to section 10(d) of the Federal Advisory Committee Act, as amended (5 U.S.C. App.), notice is hereby given of the following meeting.

The meeting will be closed to the public in accordance with the provisions set forth in sections 552b(c)(4) and 552b(c)(6), Title 5 U.S.C., as amended. The grant applications and the discussions could disclose confidential trade secrets or commercial property such as patentable material, and personal information concerning individuals associated with the grant applications, the disclosure of which would constitute a clearly unwarranted invasion of personal privacy.

Name of Committee: National Institute of Diabetes and Digestive and Kidney Diseases Special Emphasis Panel; PAR–09–247 Ancillary Clinical Studies in Metabolic Diseases.

Date: July 27, 2012.

Time: 2:00 p.m. to 3:30 p.m.

Agenda: To review and evaluate grant applications.

Place: National Institutes of Health, Two Democracy Plaza, 6707 Democracy Boulevard, Bethesda, MD 20892, (Telephone Conference Call).

Contact Person: Ann A. Jerkins, Ph.D., Scientific Review Officer, Review Branch, DEA, NIDDK, National Institutes of Health Room 759, 6707 Democracy Boulevard, Bethesda, MD 20892–5452, 301–594–2242, *jerkinsa@niddk.nih.gov.*

(Catalogue of Federal Domestic Assistance Program Nos. 93.847, Diabetes, Endocrinology and Metabolic Research; 93.848, Digestive Diseases and Nutrition Research; 93.849, Kidney Diseases, Urology and Hematology Research, National Institutes of Health, HHS)

Dated: June 26, 2012.

Jennifer S. Spaeth,

Director, Office of Federal Advisory Committee Policy.

[FR Doc. 2012–16355 Filed 7–3–12; 8:45 am]

BILLING CODE 4140–01–P

DEPARTMENT OF HEALTH AND HUMAN SERVICES

National Institutes of Health

Center for Scientific Review; Notice of Closed Meetings

Pursuant to section 10(d) of the Federal Advisory Committee Act, as amended (5 U.S.C. App.), notice is hereby given of the following meetings.

The meetings will be closed to the public in accordance with the provisions set forth in sections 552b(c)(4) and 552b(c)(6), Title 5 U.S.C., as amended. The grant applications and the discussions could disclose confidential trade secrets or commercial property such as patentable material, and personal information concerning individuals associated with the grant applications, the disclosure of which would constitute a clearly unwarranted invasion of personal privacy.

Name of Committee: Center for Scientific Review Special Emphasis Panel; Member Conflict: Chronic Disease Genetics and Epidemiology.

Date: July 20, 2012.

Time: 11:00 a.m. to 2:00 p.m.

Agenda: To review and evaluate grant applications.

Place: National Institutes of Health, 6701 Rockledge Drive, Bethesda, MD 20817, (Telephone Conference Call).

Contact Person: Fungai Chanetsa, MPH, Ph.D., Scientific Review Officer, Center for

Scientific Review, National Institutes of Health, 6701 Rockledge Drive, Room 3135, MSC 7770, Bethesda, MD 20892, 301–408–9436, *fungai.chanetsa@nih.hhs.gov.*

Name of Committee: Center for Scientific Review Special Emphasis Panel; Member Conflict: Vascular Hematology II.

Date: July 20, 2012.

Time: 1:30 p.m. to 2:30 p.m.

Agenda: To review and evaluate grant applications.

Place: National Institutes of Health, 6701 Rockledge Drive, Bethesda, MD 20892, (Telephone Conference Call).

Contact Person: Anshumali Chaudhari, Ph.D., Scientific Review Officer, Center for Scientific Review, National Institutes of Health, 6701 Rockledge Drive, Room 4124, MSC 7802, Bethesda, MD 20892, (301) 435–1210, *chaudhaa@csr.nih.gov.*

Name of Committee: Center for Scientific Review Special Emphasis Panel; Member conflict: Neurobiology of Perception, Learning and Memory.

Date: July 24, 2012.

Time: 2:00 p.m. to 5:00 p.m.

Agenda: To review and evaluate grant applications.

Place: National Institutes of Health, 6701 Rockledge Drive, Bethesda, MD 20892, (Telephone Conference Call).

Contact Person: M. Catherine Bennett, Ph.D., Scientific Review Officer, Center for Scientific Review, National Institutes of Health, 6701 Rockledge Drive, Room 5182, MSC 7846, Bethesda, MD 20892, 301–435–1766, *bennettc3@csr.nih.gov.*

(Catalogue of Federal Domestic Assistance Program Nos. 93.306, Comparative Medicine; 93.333, Clinical Research, 93.306, 93.333, 93.337, 93.393–93.396, 93.837–93.844, 93.846–93.878, 93.892, 93.893, National Institutes of Health, HHS)

Dated: June 25, 2012.

Jennifer S. Spaeth,

Director, Office of Federal Advisory Committee Policy.

[FR Doc. 2012–16352 Filed 7–3–12; 8:45 am]

BILLING CODE 4140–01–P

DEPARTMENT OF HEALTH AND HUMAN SERVICES

National Institutes of Health

Eunice Kennedy Shriver National Institute of Child Health & Human Development; Notice of Closed Meeting

Pursuant to section 10(d) of the Federal Advisory Committee Act, as amended (5 U.S.C. App.), notice is hereby given of the following meeting.

The meeting will be closed to the public in accordance with the provisions set forth in sections 552b(c)(4) and 552b(c)(6), Title 5 U.S.C., as amended. The contract proposal and the discussions could disclose confidential trade secrets or commercial property such as patentable material, and personal information concerning individuals associated with the contract proposal, the disclosure of which would constitute a clearly unwarranted invasion of personal privacy.

Name of Committee: National Institute of Child Health and Human Development Special Emphasis Panel; ZHD1 DSR–K 37.

Date: July 31, 2012.

Time: 1:00 p.m. to 5:00 p.m.

Agenda: To review and evaluate grant applications.

Place: National Institutes of Health, 6100 Executive Boulevard, Rockville, MD 20852 (Telephone Conference Call).

Contact Person: Sathasiva B. Kandasamy, Ph.D., Scientific Review Officer, Division of Scientific Review, National Institute of Child Health and Human Development, 6100 Executive Boulevard, Rockville, MD 20892–9304, (301) 435–6680, *skandasa@mail.nih.gov.*

(Catalogue of Federal Domestic Assistance Program Nos. 93.864, Population Research; 93.865, Research for Mothers and Children; 93.929, Center for Medical Rehabilitation Research; 93.209, Contraception and Infertility Loan Repayment Program, National Institutes of Health, HHS)

Dated: June 27, 2012.

Jennifer S. Spaeth,

Director, Office of Federal Advisory Committee Policy.

[FR Doc. 2012–16351 Filed 7–3–12; 8:45 am]

BILLING CODE 4140–01–P

DEPARTMENT OF HOMELAND SECURITY

Federal Emergency Management Agency

[Docket ID FEMA–2012–0022]

Assistance to Firefighters Grant Program

AGENCY: Federal Emergency Management Agency, DHS.

ACTION: Notice; correction.

On June 22, 2012, the Federal Emergency Management Agency (FEMA) published a notice in the **Federal Register** at 77 FR 37687 notifying the public of the application process for grants and the criteria for awarding grants in the fiscal year 2012 Assistance to Firefighters Grant Program year. That notice included an incorrect docket ID of FEMA–2012–0028. The correct Docket ID is FEMA–2012–0022. Specific information about the submission of grant applications can be found in the ''FY 2012 Assistance to Firefighters Grant (AFG) Guidance and Application Kit,'' which is available for download at *www.fema.gov/firegrants* and at *www.regulations.gov* under Docket ID FEMA–2012–0022.

W. Craig Fugate,

Administrator, Federal Emergency Management Agency.

[FR Doc. 2012–16347 Filed 7–3–12; 8:45 am]

BILLING CODE 9111–64–P

DEPARTMENT OF HOMELAND SECURITY

Federal Emergency Management Agency

[Docket ID FEMA–2012–0003; Internal Agency Docket No. FEMA–B–1252]

Changes in Flood Hazard Determinations

AGENCY: Federal Emergency Management Agency, DHS.

ACTION: Notice.

SUMMARY: This notice lists communities where the addition or modification of Base Flood Elevations (BFEs), base flood depths, Special Flood Hazard Area (SFHA) boundaries or zone designations, or the regulatory floodway (hereinafter referred to as flood hazard determinations), as shown on the Flood Insurance Rate Maps (FIRMs), and where applicable, in the supporting Flood Insurance Study (FIS) reports, prepared by the Federal Emergency Management Agency (FEMA) for each community, is appropriate because of new scientific or technical data. The FIRM, and where applicable, portions of the FIS report, have been revised to reflect these flood hazard determinations through issuance of a Letter of Map Revision (LOMR), in accordance with Title 44, Part 65 of the Code of Federal Regulations (44 CFR part 65). The LOMR will be used by insurance agents and others to calculate appropriate flood insurance premium rates for new buildings and the contents of those buildings. For rating purposes, the currently effective community number is shown in the table below and must be used for all new policies and renewals.

DATES: These flood hazard determinations will become effective on the dates listed in the table below and revise the FIRM panels and FIS report in effect prior to this determination for the listed communities.

From the date of the second publication of notification of these changes in a newspaper of local circulation, any person has ninety (90) days in which to request through the community that the Deputy Associate Administrator for Mitigation reconsider

the changes. The flood hazard determination information may be changed during the 90-day period.

ADDRESSES: The affected communities are listed in the table below. Revised flood hazard information for each community is available for inspection at both the online location and the respective community map repository address listed in the table below. Additionally, the current effective FIRM and FIS report for each community are accessible online through the FEMA Map Service Center at *www.msc.fema.gov* for comparison.

Submit comments and/or appeals to the Chief Executive Officer of the community as listed in the table below.

FOR FURTHER INFORMATION CONTACT: Luis Rodriguez, Chief, Engineering Management Branch, Federal Insurance and Mitigation Administration, FEMA, 500 C Street SW., Washington, DC 20472, (202) 646–4064, or (email) *Luis.Rodriguez3@fema.dhs.gov;* or visit the FEMA Map Information eXchange (FMIX) online at *www.floodmaps.fema.gov/fhm/fmx_main.html.*

SUPPLEMENTARY INFORMATION: The specific flood hazard determinations are not described for each community in this notice. However, the online location and local community map repository address where the flood hazard determination information is available for inspection is provided.

Any request for reconsideration of flood hazard determinations must be submitted to the Chief Executive Officer of the community as listed in the table below.

The modifications are made pursuant to section 201 of the Flood Disaster Protection Act of 1973, 42 U.S.C. 4105, and are in accordance with the National Flood Insurance Act of 1968, 42 U.S.C. 4001 *et seq.,* and with 44 CFR part 65.

The FIRM and FIS report are the basis of the floodplain management measures that the community is required either to adopt or to show evidence of having in effect in order to qualify or remain qualified for participation in the National Flood Insurance Program (NFIP).

These flood hazard determinations, together with the floodplain management criteria required by 44 CFR 60.3, are the minimum that are required. They should not be construed to mean that the community must change any existing ordinances that are more stringent in their floodplain management requirements. The community may at any time enact stricter requirements of its own or pursuant to policies established by other Federal, State, or regional entities. The flood hazard determinations are in accordance with 44 CFR 65.4.

The affected communities are listed in the following table. Flood hazard determination information for each community is available for inspection at both the online location and the respective community map repository address listed in the table below. Additionally, the current effective FIRM and FIS report for each community are accessible online through the FEMA Map Service Center at *www.msc.fema.gov* for comparison.

State and county	Location and case No.	Chief executive officer of community	Community map repository	Online location of letter of map revision	Effective date of modification	Community No.
Alabama:						
Jefferson	City of Birmingham (11–04–6111P).	The Honorable William Bell, Mayor, City of Birmingham, 710 North 20th Street, Birmingham, AL 35203.	Planning and Engineering Office, 710 North 20th Street, 5th floor, Birmingham, AL 35203.	*http://www.bakeraecom.com/index.php/alabama/jefferson-3/.*	June 25, 2012	010116
Mobile	Unincorporated areas of Mobile County (11–04–5872P).	The Honorable Connie Hudson, President, Mobile County Commission, P.O. Box 1443, Mobile, AL 36633.	Mobile County Government Plaza, 205 Government Street, 3rd Floor, South Tower, Mobile, AL 36644.	*http://www.bakeraecom.com/index.php/alabama/mobile/.*	July 9, 2012	015008
Mobile	Unincorporated areas of Mobile County (11–04–6441P).	The Honorable Connie Hudson, President, Mobile County Commission, P.O. Box 1443, Mobile, AL 36633.	Mobile County Government Plaza, 205 Government Street, 3rd Floor, South Tower, Mobile, AL 36644.	*http://www.bakeraecom.com/index.php/alabama/mobile/.*	July 9, 2012	015008
Arizona:						
Coconino	City of Flagstaff (11–09–3784P).	The Honorable Sara Presler, Mayor, City of Flagstaff, 211 West Aspen Avenue, Flagstaff, AZ 86001.	City Hall, Stormwater Management Section, 211 West Aspen Avenue, Flagstaff, AZ 86001.	*http://www.bakeraecom.com/index.php/arizona/coconino-county/.*	June 4, 2012	040020
Coconino	City of Flagstaff (11–09–3786P).	The Honorable Sara Presler, Mayor, City of Flagstaff, 211 West Aspen Avenue, Flagstaff, AZ 86001.	City Hall, Stormwater Management Section, 211 West Aspen Avenue, Flagstaff, AZ 86001.	*http://www.bakeraecom.com/index.php/arizona/coconino-county/.*	June 29, 2012	040020
Pinal	City of Eloy (11–09–3507P).	The Honorable Byron K. Jackson, Mayor, City of Eloy, 628 North Main Street, Eloy, AZ 85131.	628 North Main Street, Eloy, AZ 85131.	*http://www.bakeraecom.com/index.php/arizona/pinal-county/.*	June 15, 2012	040083
Santa Cruz	Unincorporated areas of Santa Cruz County (11–09–3703P).	The Honorable Rudy Molera, Chairman, Santa Cruz County Board of Supervisors, 2150 North Congress Drive, Nogales, AZ 85621.	2150 North Congress Drive, Room 117, Nogales, AZ 85621.	*http://www.bakeraecom.com/index.php/arizona/santa-cruz-county/.*	June 18, 2012	040090
Arkansas:						
Pulaski	City of Little Rock (11–06–4271P).	The Honorable Mark Stodola, Mayor, City of Little Rock, 500 West Markham Street, Room 203, Little Rock, AR 72201.	Department of Public Works, 701 West Markham Street, Little Rock, AR 72201.	*http://www.rampp-team.com/lomrs.htm.*	June 6, 2012	050181

State and county	Location and case No.	Chief executive officer of community	Community map repository	Online location of letter of map revision	Effective date of modification	Community No.
Pulaski	Unincorporated areas of Pulaski County (11–06–4271P).	The Honorable Floyd G. Villines, Pulaski County Judge, 201 South Broadway Street, Suite 400, Little Rock, AR 72201.	501 West Markham Street, Suite A, Little Rock, AR 72201.	*http://www.rampp-team.com/lomrs.htm.*	June 6, 2012	050179
California:						
Los Angeles	City of Burbank (11–09–3187P).	The Honorable Jess Talamantes, Mayor, City of Burbank, 275 East Olive Avenue, Burbank, CA 91502.	Public Works Department, 150 North 3rd Street, Burbank, CA 91502.	*http://www.bakeraecom.com/index.php/california/los-angeles-county/.*	June 28, 2012	065018
Los Angeles	City of Burbank (12–09–0407P).	The Honorable Jess Talamantes, Mayor, City of Burbank, 275 East Olive Avenue, Burbank, CA 91502.	Public Works Department, 150 North 3rd Street, Burbank, CA 91502.	*http://www.bakeraecom.com/index.php/california/los-angeles-county/.*	June 25, 2012	065018
Los Angeles	City of Los Angeles (12–09–0407).	The Honorable Antonio R. Villaraigosa, Mayor, City of Los Angeles, City Hall, 200 North Spring Street, Los Angeles, CA 90012.	6500 South Spring Street, Suite 1200, Los Angeles, CA 90014.	*http://www.bakeraecom.com/index.php/california/los-angeles-county/.*	June 25, 2012	060137
Los Angeles	City of Santa Clarita (12–09–0632P).	The Honorable Laurie Ender, Mayor, City of Santa Clarita, 23920 West Valencia Boulevard, Santa Clarita, CA 91355.	23920 West Valencia Boulevard, Suite 300, Santa Clarita, CA 91355.	*http://www.bakeraecom.com/index.php/california/los-angeles-county/.*	June 15, 2012	060729
Los Angeles	Unincorporated areas of Los Angeles County (11–09–4035P).	The Honorable Zev Yaroslavsky, Chairman, Los Angeles County Board of Supervisors, 500 West Temple Street, Room 821, Los Angeles, CA 90012.	Department of Public Works, 900 South Fremont Avenue, Alhambra, CA 91803.	*http://www.bakeraecom.com/index.php/california/los-angeles-county/.*	June 25, 2012	065043
Colorado:						
Adams	City of Commerce City (11–08–0747P).	The Honorable Sean Ford, Sr., Mayor, City of Commerce City, 7887 East 60th Avenue, Commerce City, CO 80022.	5291 East 60th Avenue, Commerce City, CO 80022.	*http://www.bakeraecom.com/index.php/colorado/adams/.*	June 13, 2012	080006
Adams	City of Commerce City (11–08–0367P).	The Honorable Sean Ford, Sr., Mayor, City of Commerce City, 7887 East 60th Avenue, Commerce City, CO 80022.	5291 East 60th Avenue, Commerce City, CO 80022.	*http://www.bakeraecom.com/index.php/colorado/adams/.*	April 11, 2012	080006
Adams	Unincorporated areas of Adams County (11–08–0747P).	The Honorable W.R. ''Skip'' Fischer, Chairman, Adams County Board of Commissioners, 4430 South Adams County Parkway, 5th Floor, Suite C5000A, Brighton, CO 80601.	4430 South Adams Parkway, 5th Floor, Suite C5000A, Brighton, CO 80601.	*http://www.bakeraecom.com/index.php/colorado/adams/.*	June 13, 2012	080001
Larimer	Town of Timnath (11–08–1110P).	The Honorable Jill Grossman-Belisle, Mayor, Town of Timnath, 4800 Goodman Street, Timnath, CO 80547.	4100 Main Street, Timnath, CO 80547.	*http://www.bakeraecom.com/index.php/colorado/larimer/.*	June 18, 2012	080005
Larimer	Unincorporated areas of Larimer County (11–08–1110P).	The Honorable Lew Gaiter III, Chairman, Larimer County Board of Commissioners, P.O. Box 1190, Fort Collins, CO 80522.	200 West Oak Street, Fort Collins, CO 80521.	*http://www.bakeraecom.com/index.php/colorado/larimer/.*	June 18, 2012	080101
Park	Unincorporated areas of Park County (11–08–1151P).	The Honorable Dick Hodges, Chairman, Park County Board of Commissioners, P.O. Box 1373, Fairplay, CO 80440.	501 Main Street, Fairplay, CO 80440.	*http://www.bakeraecom.com/index.php/colorado/park/.*	June 18, 2012	080139
Connecticut:						
Hartford	Town of Avon (12–01–0826X).	The Honorable Mark Zacchio, Chairman, Avon Town Council, 60 West Main Street, Avon, CT 06001.	Town Hall, 60 West Main Street, Avon, CT 06001.	*http://www.starr-team.com/starr/LOMR/Pages/RegionI.aspx.*	June 18, 2012	090021
Florida:						

State and county	Location and case No.	Chief executive officer of community	Community map repository	Online location of letter of map revision	Effective date of modification	Community No.
Charlotte	City of Punta Gorda (12–04–1783P).	The Honorable Bill Albers, Mayor, City of Punta Gorda, 326 West Marion Avenue, Punta Gorda, FL 33950.	326 West Marion, Punta Gorda, FL 33950.	*http://www.bakeraecom.com/index.php/florida/charlotte/.*	June 18, 2012	120062
Monroe	Unincorporated areas of Monroe County (12–04–0296P).	The Honorable Kim Wigington, Mayor Pro Tem, Monroe County, 500 Whitehead Street, Suite 102, Key West, FL 33040.	Monroe County Department of Planning and Environmental Resources, 2798 Overseas Highway, Marathon, FL 33050.	*http://www.bakeraecom.com/index.php/florida/monroe-3/.*	June 11, 2012	125129
Santa Rosa	Unincorporated areas of Santa Rosa County (11–04–7398P).	The Honorable Jim Williamson, Chairman, Santa Rosa County Commissioners, 6495 Caroline Street, Suite M, Milton, FL 32570.	Building Inspections, 6051 Old Bagdad Highway, Suite 202, Milton, FL 32583.	*http://www.bakeraecom.com/index.php/florida/santa-rosa/.*	June 28, 2012	120274
Santa Rosa	Unincorporated areas of Santa Rosa County (11–04–7400P).	The Honorable Jim Williamson, Chairman, Santa Rosa County Commissioners, 6495 Caroline Street, Suite M, Milton, FL 32570.	Building Inspections, 6051 Old Bagdad Highway, Suite 202, Milton, FL 32583.	*http://www.bakeraecom.com/index.php/florida/santa-rosa/.*	June 28, 2012	120274
Kentucky:						
Fayette	Lexington-Fayette Urban County Government (12–04–1259P).	The Honorable Jim Gray, Mayor, Lexington-Fayette Urban County Government, 200 East Main Street, Lexington, KY 40507.	Division of Planning, Current Planning Section, 101 East Vine Street, Lexington, KY 40507.	*http://www.bakeraecom.com/index.php/kentucky/fayette/.*	June 18, 2012	210067
South Dakota:						
Lincoln	Town of Tea (11–08–0969P).	The Honorable John Lawler, Mayor, Town of Tea, P.O. Box 128, Tea, SD 57064.	City Hall, 600 East 1st Street, Tea, SD 57064.	*http://www.bakeraecom.com/index.php/south-dakota/lincoln-4/.*	June 18, 2012	460143
Texas:						
Bell	City of Harker Heights (11–06–1826P).	The Honorable Mike Aycock, Mayor, City of Harker Heights, 1300 East FM 2410, Harker Heights, TX 76548.	305 Miller's Crossing, Harker Heights, TX 76548.	*http://www.rampp-team.com/lomrs.htm.*	May 30, 2012	480029
Collin	City of Richardson (12–06–0547X).	The Honorable Bob Townsend, Mayor, City of Richardson, 411 West Arapaho Road, Richardson, TX 75080.	City Hall, 411 West Arapaho Road, Richardson, TX 75080.	*http://www.rampp-team.com/lomrs.htm.*	June 22, 2012	480184
Denton	Town of Little Elm (12–06–0531P).	The Honorable Charles Platt, Mayor, Town of Little Elm, 100 West Eldorado Parkway, Little Elm, TX 75068.	Town Hall, 100 West Eldorado Parkway, Little Elm, TX 75068.	*http://www.rampp-team.com/lomrs.htm.*	June 4, 2012	481152
Harris	Unincorporated areas of Harris County (12–06–0410P).	The Honorable Ed Emmett, Harris County Judge, 1001 Preston Street, Suite 911, Houston, TX 77002.	10555 Northwest Freeway, Houston, TX 77092.	*http://www.rampp-team.com/lomrs.htm.*	June 20, 2012	480287
Jefferson	City of Beaumont (12–06–0696X).	The Honorable Becky Ames, Mayor, City of Beaumont, 801 Main Street, Beaumont, TX 77701.	Beaumont City Hall, 801 Main Street, Beaumont, TX 77701.	*http://www.rampp-team.com/lomrs.htm.*	June 25, 2012	485457
Johnson	City of Burleson (11–06–1749P).	The Honorable Ken D. Shetter, Mayor, City of Burleson, 141 West Renfro Street, Burleson, TX 76028.	141 West Renfro Street, Burleson, TX 76028.	*http://www.rampp-team.com/lomrs.htm.*	June 21, 2012	485459
Tarrant	City of North Richland Hills (11–06–2556P).	The Honorable T. Oscar Trevino, Jr., P.E., Mayor, City of North Richland Hills, 7301 Northeast Loop 820, North Richland Hills, TX 76180.	7301 Northeast Loop 820, North Richland Hills, TX 76180.	*http://www.rampp-team.com/lomrs.htm.*	May 25, 2012	480607
Victoria	City of Victoria (12–06–0680X).	The Honorable Will Armstrong, Mayor, City of Victoria, 105 West Juan Linn Street, Victoria, TX 77901.	702 North Main Street, Suite 115, Victoria, TX 77902.	*http://www.rampp-team.com/lomrs.htm.*	June 1, 2012	480638

State and county	Location and case No.	Chief executive officer of community	Community map repository	Online location of letter of map revision	Effective date of modification	Community No.
Virginia: Frederick	Unincorporated areas of Frederick County (11–03–0806P).	The Honorable Richard C. Shickle, Chairman, Frederick County Board of Supervisors, 107 North Kent Street, Winchester, VA 22601.	Planning and Development Office, 107 North Kent Street, Suite 202, Winchester, VA 22601.	*http://www.rampp-team.com/lomrs.htm.*	June 8, 2012	510063

(Catalog of Federal Domestic Assistance No. 97.022, ''Flood Insurance.'')

Sandra K. Knight,

Deputy Associate Administrator for Mitigation, Department of Homeland Security, Federal Emergency Management Agency.

[FR Doc. 2012–16361 Filed 7–3–12; 8:45 am]

BILLING CODE 9110–12–P

DEPARTMENT OF HOMELAND SECURITY

Federal Emergency Management Agency

[Docket ID FEMA–2012–0003; Internal Agency Docket No. FEMA–B–1256]

Proposed Flood Hazard Determinations

AGENCY: Federal Emergency Management Agency, DHS.

ACTION: Notice.

SUMMARY: Comments are requested on proposed flood hazard determinations, which may include additions or modifications of any Base Flood Elevation (BFE), base flood depth, Special Flood Hazard Area (SFHA) boundary or zone designation, or regulatory floodway on the Flood Insurance Rate Maps (FIRMs), and where applicable, in the supporting Flood Insurance Study (FIS) reports for the communities listed in the table below. The purpose of this notice is to seek general information and comment regarding the preliminary FIRM, and where applicable, the FIS report that the Federal Emergency Management Agency (FEMA) has provided to the affected communities. The FIRM and FIS report are the basis of the floodplain management measures that the community is required either to adopt or to show evidence of having in effect in order to qualify or remain qualified for participation in the National Flood Insurance Program (NFIP). In addition, the FIRM and FIS report, once effective, will be used by insurance agents and others to calculate appropriate flood insurance premium rates for new buildings and the contents of those buildings.

DATES: Comments are to be submitted on or before October 3, 2012.

ADDRESSES: The Preliminary FIRM, and where applicable, the FIS report for each community are available for inspection at both the online location and the respective Community Map Repository address listed in the tables below. Additionally, the current effective FIRM and FIS report for each community are accessible online through the FEMA Map Service Center at *www.msc.fema.gov* for comparison.

You may submit comments, identified by Docket No. FEMA–B–1256, to Luis Rodriguez, Chief, Engineering Management Branch, Federal Insurance and Mitigation Administration, FEMA, 500 C Street SW., Washington, DC 20472, (202) 646–4064, or (email) *Luis.Rodriguez3@fema.dhs.gov.*

FOR FURTHER INFORMATION CONTACT: Luis Rodriguez, Chief, Engineering Management Branch, Federal Insurance and Mitigation Administration, FEMA, 500 C Street SW., Washington, DC 20472, (202) 646–4064, or (email) *Luis.Rodriguez3@fema.dhs.gov;* or visit the FEMA Map Information eXchange (FMIX) online at *www.floodmaps.fema.gov/fhm/fmx_main.html.*

SUPPLEMENTARY INFORMATION: FEMA proposes to make flood hazard determinations for each community listed below, in accordance with section 110 of the Flood Disaster Protection Act of 1973, 42 U.S.C. 4104, and 44 CFR 67.4(a).

These proposed flood hazard determinations, together with the floodplain management criteria required by 44 CFR 60.3, are the minimum that are required. They should not be construed to mean that the community must change any existing ordinances that are more stringent in their floodplain management requirements. The community may at any time enact stricter requirements of its own or pursuant to policies established by other Federal, State, or regional entities. These flood hazard determinations are used to meet the floodplain management requirements of the NFIP and also are used to calculate the appropriate flood insurance premium rates for new buildings built after the FIRM and FIS report become effective.

The communities affected by the flood hazard determinations are provided in the tables below. Any request for reconsideration of the revised flood hazard information shown on the Preliminary FIRM and FIS report that satisfies the data requirements outlined in 44 CFR 67.6(b) is considered an appeal. Comments unrelated to the flood hazard determinations also will be considered before the FIRM and FIS report become effective.

Use of a Scientific Resolution Panel (SRP) is available to communities in support of the appeal resolution process. SRPs are independent panels of experts in hydrology, hydraulics, and other pertinent sciences established to review conflicting scientific and technical data and provide recommendations for resolution. Use of the SRP only may be exercised after FEMA and local communities have been engaged in a collaborative consultation process for at least 60 days without a mutually acceptable resolution of an appeal. Additional information regarding the SRP process can be found online at *www.fema.gov/pdf/media/factsheets/2010/srp_fs.pdf.*

The watersheds and/or communities affected are listed in the tables below. The Preliminary FIRM, and where applicable, FIS report for each community are available for inspection at both the online location and the respective Community Map Repository address listed in the tables. Additionally, the current effective FIRM and FIS report for each community are accessible online through the FEMA Map Service Center at *www.msc.fema.gov* for comparison.

Community	Community map repository address
Northampton County, Pennsylvania (All Jurisdictions)	
Maps Available for Inspection Online at: *http://www.rampp-team.com/pa.htm*	
Borough of Bangor	Borough Hall, 197 Pennsylvania Avenue, Bangor, PA 18013.
Borough of Bath	Borough Hall, 214 East Main Street, Bath, PA 18014.
Borough of Chapman	Chapman Borough Secretary's Office, 1400 Main Street, Bath, PA 18014.
Borough of East Bangor	Borough Hall, 45 South High Street, East Bangor, PA 18013.
Borough of Freemansburg	Borough Hall, 600 Monroe Street, Freemansburg, PA 18017.
Borough of Glendon	Borough Hall, 24 Franklin Street, Glendon, PA 18042.
Borough of Hellertown	Borough Municipal Building, 685 Main Street, Hellertown, PA 18055.
Borough of Nazareth	Borough Engineer's Office, Keller Consulting Engineers, Inc., 49 East Center Street, Nazareth, PA 18064.
Borough of North Catasauqua	Borough Hall, 1066 4th Street, North Catasauqua, PA 18032.
Borough of Northampton	Borough Municipal Office, 1401 Laubach Avenue, Northampton, PA 18067.
Borough of Pen Argyl	Borough Office, 11–13 North Robinson Avenue, Pen Argyl, PA 18072.
Borough of Portland	Borough Building, 1 Division Street, Portland, PA 18351.
Borough of Roseto	Borough Office, 164 Garibaldi Avenue, Roseto, PA 18013.
Borough of Stockertown	Borough Hall, 209 Main Street, Stockertown, PA 18083.
Borough of Tatamy	Borough Municipal Building, 423 Broad Street, Tatamy, PA 18085.
Borough of Walnutport	Borough Offices, 417 Lincoln Avenue, Walnutport, PA 18088.
Borough of West Easton	Borough Hall, 237 7th Street, West Easton, PA 18042.
Borough of Wilson	Wilson Borough Hall, 2040 Hay Terrace, Easton, PA 18042.
Borough of Wind Gap	Borough Offices, 29 Mechanic Street, Wind Gap, PA 18091.
City of Bethlehem	City Hall, Planning Office, 10 East Church Street, Bethlehem, PA 18018.
City of Easton	Public Services and Engineering Department, 1 South 3rd Street, Easton, PA 18042.
Township of Allen	Allen Township Hall, 4714 Indian Trail Road, Northampton, PA 18067.
Township of Bethlehem	Municipal Building, 4225 Easton Avenue, Bethlehem, PA 18020.
Township of Bushkill	Bushkill Township Hall, 1114 Bushkill Center Road, Nazareth, PA 18064.
Township of East Allen	East Allen Township Offices, 5344 Nor-Bath Boulevard, Northampton, PA 18067.
Township of Forks	Forks Township Hall, 1606 Sullivan Trail, Easton, PA 18040.
Township of Hanover	Hanover Township Engineering Office, 252 Broadhead Road, Suite 100, Bethlehem, PA 18017.
Township of Lehigh	Lehigh Township Municipal Building, 1069 Municipal Road, Walnutport, PA 18088.
Township of Lower Mount Bethel	Lower Mount Bethel Township Hall, 6984 South Delaware Drive, Martins Creek, PA 18063.
Township of Lower Nazareth	Lower Nazareth Township Zoning Administrator's Office, 306 Butztown Road, Bethlehem, PA 18020.
Township of Lower Saucon	Lower Saucon Township Hall, 3700 Old Philadelphia Pike, Bethlehem, PA 18015.
Township of Moore	Moore Township Municipal Building, 2491 Community Drive, Bath, PA 18014.
Township of Palmer	Township Municipal Building, 3 Weller Place, Palmer, PA 18043.
Township of Plainfield	Plainfield Township Hall, 6292 Sullivan Trail, Nazareth, PA 18064.
Township of Upper Mount Bethel	Upper Mount Bethel Township Municipal Building, 387 Ye Olde Highway, Mount Bethel, PA 18343.
Township of Upper Nazareth	Upper Nazareth Township Municipal Building, 100 Newport Avenue, Nazareth, PA 18064.
Township of Washington	Washington Township Hall, 1021 Washington Boulevard, Bangor, PA 18013.
Township of Williams	Williams Township Municipal Building, 655 Cider Press Road, Easton, PA 18042.
Lincoln County, West Virginia, and Incorporated Areas	
Maps Available for Inspection Online at: *https://www.rampp-team.com/wv.htm*	
Town of Hamlin	Town Hall, 220–1 Main Street, Hamlin, WV 25523.
Town of West Hamlin	Town Hall, 6649 Guyan Street, West Hamlin, WV 25571.
Unincorporated Areas of Lincoln County	Lincoln County Courthouse, 497 Court Avenue, Hamlin, WV 25523.

(Catalog of Federal Domestic Assistance No. 97.022, ''Flood Insurance.'')

Sandra K. Knight,

Deputy Associate Administrator for Mitigation, Department of Homeland Security, Federal Emergency Management Agency.

[FR Doc. 2012–16362 Filed 7–3–12; 8:45 am]

BILLING CODE 9110–12–P

DEPARTMENT OF HOUSING AND URBAN DEVELOPMENT

[Docket No. FR–5603–N–47]

Notice of Proposed Information Collection for Public Comment: Housing Choice Voucher Program Administrative Fee Study Data Collection for Full National Study

AGENCY: Office of the Chief Information Officer, HUD.

ACTION: Notice.

SUMMARY: The proposed information collection requirement described below will be submitted to the Office of Management and Budget (OMB) for review, as required by the Paperwork Reduction Act. The Department is soliciting public comments on the subject proposal.

This request is for the clearance of on-site and telephone data collection from public housing agencies (PHAs) in support of the Housing Choice Voucher (HCV) Program Administrative Fee Study. The purpose of the study is to collect accurate information on the costs of administering the HCV program across a national sample of high-

performing and efficient PHAs, and to use this information to develop a new administrative fee allocation formula for the HCV program. This request for clearance is the fourth OMB request in support of this study and is for data collection for the full national study. The prior OMB requests have covered the reconnaissance or research design phase of the study, pretesting the full national study design, and conducting additional reconnaissance visits to increase the study sample. For the current OMB request, the research team proposes three main types of data collection: (1) Measuring the time that HCV staff spend working on the various activities required to administer the program over a two-month period; (2) collecting information via interviews and document review on overhead costs, other costs related to HCV program administration that cannot be captured by measuring staff time, and ''transaction counts'' (the number of times an HCV program activity is completed over a specified period of time) in order to translate the staff time spent on that activity into a time per activity or cost per activity; and (3) a telephone survey of 130 small HCV programs (fewer than 250 vouchers) to understand how smaller agencies administer the HCV program effectively without the benefit of economies of scale that apply to larger programs. The results of the data collection will be used to generate estimates of total cost per activity per PHA and to build a multivariate regression model that tests how much the variation across PHAs in administrative costs can be explained by PHA, participant, and market characteristics. The results of the model will be used to inform the development of an administrative fee formula that is based on the average cost per activity and takes into account the most important factors that cause some HCV programs to be more costly to administer than others.

DATES: *Comments Due Date:* August 6, 2012.

ADDRESSES: Interested persons are invited to submit comments regarding this proposal. Comments should refer to the proposal by name and/or OMB Control Number and should be sent to: Reports Liaison Officer, Department of Housing and Urban Development, 451 7th Street SW., Washington, DC 20410, Room 9120 or the number for the Federal Information Relay Service (1–800–877–8339).

FOR FURTHER INFORMATION CONTACT: Colette Pollard, Reports Management Officer, QDAM, Department of Housing and Urban Development, 451 Seventh Street SW., Washington, DC 20410; email Colette Pollard at *Colette.Pollard@hud.gov* or telephone (202) 402–3400. This is not a toll-free number. Copies of available documents submitted to OMB may be obtained from Ms. Pollard.

SUPPLEMENTARY INFORMATION: The Department is submitting the proposed information collection to OMB for review, as required by the Paperwork Reduction Act of 1995 (44 U.S.C. chapter 35, as amended).

This Notice is soliciting comments from members of the public and affected agencies concerning the proposed collection of information to: (1) Evaluate whether the proposed collection is necessary for the proper performance of the functions of the agency, including whether the information will have practical utility; (2) Evaluate the accuracy of the agency's estimate of the burden of the proposed collection of information; (3) Enhance the quality, utility, and clarity of the information to be collected; and (4) Minimize the burden of the collection of information on those who are to respond; including the use of appropriate automated collection techniques or other forms of information technology, e.g., permitting electronic submission of responses.

This Notice also lists the following information:

Title of Proposal: Housing Choice Voucher Program Administrative Fee Study Data Collection for Full National Study.

OMB Control Number, if applicable: 2528–Pending.

Description of the need for the information and proposed use:

This request is for the clearance of on-site and telephone data collection from public housing agencies (PHAs) in support of the Housing Choice Voucher (HCV) Program Administrative Fee Study. The purpose of the study is to collect accurate information on the costs of administering the HCV program across a national sample of high-performing and efficient PHAs, and to use this information to develop a new administrative fee allocation formula for the HCV program. This request for clearance is the fourth OMB request in support of this study and is for data collection for the full national study. The prior OMB requests have covered the reconnaissance or research design phase of the study, pretesting the full national study design, and conducting additional reconnaissance visits to increase the study sample. For the current OMB request, the research team proposes three main types of data collection: (1) Measuring the time that HCV staff spend working on the various activities required to administer the program over a two-month period; (2) collecting information via interviews and document review on overhead costs, other costs related to HCV program administration that cannot be captured by measuring staff time, and ''transaction counts'' (the number of times an HCV program activity is completed over a specified period of time) in order to translate the staff time spent on that activity into a time per activity or cost per activity; and (3) a telephone survey of 130 small HCV programs (fewer than 250 vouchers) to understand how smaller agencies administer the HCV program effectively without the benefit of economies of scale that apply to larger programs. The results of the data collection will be used to generate estimates of total cost per activity per PHA and to build a multivariate regression model that tests how much the variation across PHAs in administrative costs can be explained by PHA, participant, and market characteristics. The results of the model will be used to inform the development of an administrative fee formula that is based on the average cost per activity and takes into account the most important factors that cause some HCV programs to be more costly to administer than others.

Agency form numbers, if applicable: None.

Estimation of the total numbers of hours needed to prepare the information collection including number of respondents, frequency of response, and hours of response: The research team plans to collect time measurement and cost data at up to 60 PHAs across the country and to survey an additional 130 PHAs with small HCV programs. There are 5 data collection activities that involve PHA staff. First, 1 staff at each of the 60 PHAs will spend up to 9 hours over the data collection period working with the research team to prepare for and monitor the time measurement data collection (1 staff × 9 hours × 60 sites = 540 hours). Second, an average of 2 staff at each of the 60 PHAs will spend up to 2.5 days each (20 hours) preparing for and being interviewed in person or by telephone by the study team about program overhead costs, transaction counts, and recent changes in voucher program operations (2 staff × 20 hours × 60 sites = 2,400 hours). Third, an average of 20 HCV program staff per site will participate in the time measurement data collection. This will entail receiving 2 hours of training (20 staff × 2 hours ×60 sites = 2,400 hours) and responding to notifications via a smart phone provided by the study team

on their work activities over a two-month period (40 working days). Responding to the notifications will take approximately 15 minutes per day per staff, for a total of 10 hours per staff over the 40 working days (20 staff × 10 hours × 60 sites = 12,000 hours). Fourth, up to 2 PHA staff at each of the 60 days will spend up to 8 hours each preparing transaction counts data at the end of the time measurement period (2 staff × 8 hours × 60 sites = 960 hours). Finally, up to 2 PHA staff at 130 PHAs will participate in the small program telephone survey. These staff will spend up to 2 hours preparing for the telephone survey, including assembling financial statements and other documentation, and up to 2 hours completing the survey (2 staff × 4 hours × 130 PHAs = 1,040 hours). The total estimated burden across all proposed data collection activities is 19,340 hours.

Status of the proposed information collection: This is a new collection.

Authority: The Paperwork Reduction Act of 1995, 44 U.S.C. chapter 35, as amended.

Dated: June 29, 2012.

Colette Pollard,

Departmental Reports Management Officer, Office of the Chief Information Officer.

[FR Doc. 2012–16457 Filed 7–3–12; 8:45 am]

BILLING CODE 4210–67–P

DEPARTMENT OF THE INTERIOR

Fish and Wildlife Service

[FWS–R9–IA–2012–N131; 000–123D0102DM–DS61200000]

U.S. Coral Reef Task Force Public Meeting and Public Comment

AGENCY: Fish and Wildlife Service, Interior.

ACTION: Notice of public meeting; request for public comment.

SUMMARY: We, the U.S. Fish and Wildlife Service (Service), announce a public meeting of the U.S. Coral Reef Task Force (USCRTF) and a request for written comments. This meeting, the 28th biannual meeting of the USCRTF, provides a forum for coordinated planning and action among Federal agencies, State and territorial governments, and nongovernmental partners.

DATES: *Meeting Dates:* August 20, 2012, through August 23, 2012.

Please be aware of the following dates:

Advance Public Comments: Submit to Liza Johnson at the email, fax, or mailing address listed below by July 22, 2012.

Registration To Attend the Meeting: Attendees can register online prior to the start of the meeting, or on site at the registration desk. The following events will take place on the following dates, with registration details to be announced on site:

- *Steering Committee:* Monday, August 20, 2012.
- *Field site visits:* Monday, August 20, 2012.
- *Workshop:* Tuesday, August 21, 2012.
- *Business Meeting:* Wednesday, August 22, 2012, and Thursday, August 23, 2012.

Public Comments Given at the Meeting: Submit in writing to Liza Johnson by email, fax, or mail (see **FOR FURTHER INFORMATION CONTACT**) by September 24, 2012.

ADDRESSES: Lee Auditorium, Pago Pago, American Samoa (phone number is 684–633–5155).

FOR FURTHER INFORMATION CONTACT: Liza Johnson, DOI USCRTF Steering Committee Point of Contact, U.S. Department of the Interior, MS–3530–MIB, 1849 C Street NW., Washington, DC 20240 (phone: 202–208–1378; fax: 202–208–4867; email: *Liza_M_Johnson@ios.doi.gov*); or Silmarie Padrón, FWS Liaison, USCRTF, U.S. Fish and Wildlife Service, 4401 N. Fairfax Drive, Room 750, Arlington, VA 22203 (phone: 703–358–2150; fax: 703–358–2232; *Silmarie_Padron@fws.gov*); or visit the USCRTF Web site at *www.coralreef.gov.*

SUPPLEMENTARY INFORMATION: Established by Presidential Executive Order 13089 in 1998, the USCRTF has a mission to lead, coordinate, and strengthen U.S. government actions to better preserve and protect coral reef ecosystems. The Departments of Commerce and the Interior co-chair the USCRTF, whose members include leaders of 12 Federal agencies, 2 U.S. States and 5 U.S. territories, and 3 freely associated States. For more information about the meetings, draft agendas, and how to register, go to *www.coralreef.gov.* A written summary of the meeting will be posted on the Web site within 2 months after the meeting.

Public Comments

Comments may address the meeting, the role of the USCRTF, or general coral reef conservation issues.

Public Availability of Comments

Before including your address, phone number, email address, or other personal identifying information in your comment, you should be aware that your entire comment—including your personal identifying information—may be made publicly available at any time. While you can ask us in your comment to withhold your personal identifying information from public review, we cannot guarantee that we will be able to do so.

Eileen Sobeck,

Deputy Assistant Secretary for Fish and Wildlife and Parks, Department of the Interior.

[FR Doc. 2012–16472 Filed 7–3–12; 8:45 am]

BILLING CODE 4310–55–P

DEPARTMENT OF THE INTERIOR

Bureau of Indian Affairs

Land Acquisitions: 19 Pueblos

AGENCY: Bureau of Indian Affairs, Interior.

ACTION: Notice of final agency determination to take land into trust.

SUMMARY: The Assistant Secretary—Indian Affairs made a final agency determination to acquire approximately 8.43 acres of land into trust for the 19 pueblos on January 31, 2012.

FOR FURTHER INFORMATION CONTACT: Sandra Ray, Realty Specialist, Southwest Regional Office, Bureau of Indian Affairs, 1001 Indian School Road NW., Albuquerque, NM 87104–2303; Telephone (505) 563–3337, *sandy.ray@bia.gov.*

SUPPLEMENTARY INFORMATION: This notice is published in the exercise of authority delegated by the Secretary of the Interior to the Assistant Secretary—Indian Affairs by 209 Departmental Manual 8.1.

This acquisition is mandatory under 25 U.S.C. 2216(c); Title I—Albuquerque Indian School Act, Public Law 110–453, dated December 2, 2008; and 25 CFR part 151. The land being transferred is two tracts of Federal land, the combined acreage of which is approximately 8.43 acres that were historically part of the Albuquerque Indian School. These two tracts were officially surveyed in 2011 by the U.S. Bureau of Land Management for the Secretary of the Interior, in accordance with Sec. 103 (c) of Public Law 110–453, and are more particularly described as follows:

(1) EASTERN PART TRACT B —That certain tract of land, officially designated TRACT B EAST on the hereinafter described 2011 U.S. Bureau of Land Management survey plat, situated in the Town of Albuquerque Grant, in the City of Albuquerque, within Section 8, Township 10 North,

Range 3 East, New Mexico Principal Meridian, Bernalillo County, New Mexico, containing 2.22 acres, more or less.

(2) NORTHERN PART OF TRACT D—That certain tract of land, officially designated TRACT D NORTH on the hereinafter described 2011 U.S. Bureau of Land Management survey plat, situated in the Town of Albuquerque Grant, in the City of Albuquerque, within Sections 7 and 8, Township 10 North, Range 3 East, New Mexico Principal Meridian, Bernalillo County, New Mexico, containing 6.21 acres, more or less.

The above-described TRACT B EAST and TRACT D NORTH were officially surveyed in 2011 by the U.S. Department of the Interior, Bureau of Land Management, Cadastral Survey, and are the same as shown and designated on the official plat of survey entitled ''The Town of Albuquerque Grant, Bernalillo County, within Township 10 North, Range 3 East, of the New Mexico Principal Meridian, New Mexico, Metes and Bounds Surveys,'' and described in the official field note record, both approved August 12, 2011, and filed in the records of the Bureau of Land Management, New Mexico State Office, in Santa Fe, New Mexico.

The land taken into trust shall remain subject to any private or municipal encumbrances, rights-of-way, restrictions, easements of record, or utility service agreements in effect on the date of enactment of the Act.

The TOTAL AREA, as derived from the above-described survey plat, containing 8.43 acres, more or less. (For copies of the above-described Bureau of Land Management survey plat and field notes, please contact Paul J. Hickey, BLM Indian Lands Surveyor, BIA Southwest Regional Office, by phone at (505) 563–3338, or by email at *paul.hickey@bia.gov.*)

The determination of the Assistant Secretary—Indian Affairs that this is a mandatory acquisition is final for the Department and can only be appealed to the Federal District Court. This notice will serve as the final agency determination to take the land into trust and that the Secretary shall acquire title to the land no sooner than 30 days following publication of this document in the **Federal Register**.

Dated: June 25, 2012.

Donald E. Laverdure,

Acting Assistant Secretary—Indian Affairs.

[FR Doc. 2012–16412 Filed 7–3–12; 8:45 am]

BILLING CODE 4310–W7–P

DEPARTMENT OF THE INTERIOR

Bureau of Indian Affairs

Land Acquisitions: Pueblo of Santo Domingo

AGENCY: Bureau of Indian Affairs, Interior.

ACTION: Notice of final agency determination to take land into trust.

SUMMARY: The Assistant Secretary—Indian Affairs, made a final agency determination to acquire approximately 7,393.75 acres of land into trust for the Pueblo of Santo Domingo on January 27, 2012.

FOR FURTHER INFORMATION CONTACT: Douglas Hickman, Realty Officer, Southern Pueblos Agency, Bureau of Indian Affairs, 1001 Indian School Road NW., Albuquerque, NM 87104–2303; Telephone (505) 563–3680, *douglas.hickman@bia.gov.*

SUPPLEMENTARY INFORMATION: This notice is published in the exercise of authority delegated by the Secretary of the Interior to the Assistant Secretary—Indian Affairs by 209 Departmental Manual 8.1.

This acquisition is mandatory under 25 U.S.C. 2216(c); the Santo Domingo Pueblo Claims Settlement Act of 2000, Public Law 106–425, 114 Stat. 1890, 25 U.S.C. 1777 through 1777e, dated November 1, 2000; and Section 7 of the Settlement Agreement between the United States and the Pueblo of Santo Domingo dated May 26, 2000. The approximately 7,393.75 acres are located in Sandoval and Santa Fe Counties, New Mexico, and are described as follows:

New Mexico Principal Meridian (NMPM)

Tract A—La Majada Mesa

Township 15 North, Range 6 and 7 East, and Township 16 North, Range 6 East, NMPM, Sandoval and Santa Fe Counties, New Mexico

A parcel of land described as follows: beginning at a monument marking the position for the 3 Mile corner on the north boundary of the Santo Domingo Pueblo Grant (as originally established by Wendell V. Hall in 1907), on the south boundary of the Santa Cruz Spring Tract, thence S. 87°11′ E., along the south boundary of the Santa Cruz Spring Tract, identical with the north boundary of the Santo Domingo Pueblo Grant (Hall Survey), a distance of 2642.5 feet to the monumented 3½; Mile corner, thence continuing along the south boundary of the Santa Cruz Spring Tract, identical with the north boundary of the Santo Domingo Pueblo Grant (Hall Survey), on the following courses and distances: S. 87°13′ E., a distance of 2637.3 feet to the monumented 4 Mile corner, thence S. 87°11′ E., a distance of 2640.1 feet to the monumented 4½ Mile corner, thence S. 87°12′ E., a distance of 2640.1 feet to the monumented 5 Mile corner, thence S. 87°13′ E., a distance of 2640.1 feet to the monumented 5½ Mile corner, thence S. 87°15′ E., a distance of 1268.1 feet to a monumented point of intersection with the west boundary of the Mesita de Juana Lopez Land Grant, whence the NW corner of the Mesita de Juana Lopez Land Grant bears (*BLM record measurement, as shown on the plat approved July 8, 1985*) N. 1°41′ W. (true mean geodetic bearing), 909.81 feet (13.785 chains) distance; thence on a new line in a southerly direction on the following described courses and distances along a line marking the west boundary of the Mesita de Juana Lopez Land Grant: S. 0°44′ E., a distance of 733.4 feet to the monumented 36 Mile corner, thence S. 0°30′ W., a distance of 5243.2 feet to the monumented 35 Mile corner, thence S. 0°35′ W., a distance of 1087.1 feet to a monumented point of intersection with the south boundary of the La Majada Grant (also being the original north boundary of the Santo Domingo Pueblo Grant prior to the Hall Survey); thence in a westerly direction on the following described courses and distances along a new line marking the south boundary of the La Majada Grant (also being the original north boundary of the Santo Domingo Pueblo Grant prior to the Hall Survey): N. 72°26′ W., a distance of 810.6 feet to the monumented 2½ Mile corner, thence N. 72°17′ W., a distance of 2665.2 feet to the monumented 3 Mile corner, thence N. 73°24′ W., a distance of 2646.6 feet to the monumented 3½ Mile corner, thence N. 72°59′ W., a distance of 2656.5 feet to the monumented 4 Mile corner, thence N. 73°04′ W., a distance of 2656.3 feet to the monumented 4½ Mile corner, thence N. 73°04′ W., a distance of 1201.2 feet to a monumented point marked ''PC–1'' set by the U.S. Forest Service in 1983; thence in a northwesterly direction on the following described courses and distances along a new line marking the east boundary of lands in possession of the Santo Domingo Pueblo: N. 48°38′ W., a distance of 1601.4 feet to a point monumented with a New Mexico State Highway Right-of-Way ''T'' rail (*This point marks a property corner angle point as well as the location of the right-of-way easement granted by the U.S. Forest Service to the New Mexico State*

Highway Department for State Road 16 and United Pueblos Highway 90. This easement granted by the United States of America through the Forest Service, Department of Agriculture, was recorded with Sandoval County on May 18, 1983, in Misc. Records Vol. 154, pages 456–461), station designation is 183+35.22 (This station is shown on Sheet 5 of 5 of the New Mexico State Highway Department Right of Way Map, New Mexico Project No. BIA–SP–2545(200), revised March 30, 1977), thence N. 42°57′ W., a distance of 6727.4 feet to a point marked with a ⅜ inch diameter iron rod, thence N. 51°09′ W., a distance of 963.2 feet to a point marked with a ⅜ inch diameter iron rod, thence N. 43°33′ W., a distance of 8291.2 feet to a point marked with a ⅜ inch diameter iron rod set in a fence corner, being a point of intersection with the south boundary of the Pueblo de Cochiti Grant; thence on a new line along the south boundary of the Pueblo de Cochiti Grant on a bearing of N. 89°22′ E., a distance of 210.7 feet to a monumented point marked ''AP–5, SCS'', whence the ½ Mile corner on the south boundary of the Pueblo de Cochiti Grant bears (*BLM record measurement, as shown on the plat approved July 8, 1985*) N. 89°51′ E. (true mean geodetic bearing), 975.48 feet (14.78 chains) distance; thence on a new line along the west boundary of the Santa Cruz Spring Tract, on the following described courses and distances: S. 44°01′ E., a distance of 1213.6 feet to a monumented point marked ''2 M–SCS'', thence S. 44°01′ E., a distance of 4807.3 feet to a monumented point marked ''AP–4, SCS'', thence a distance of 99.8 feet along the arc of a curve to the left having a radius of 5629.6 feet and a chord bearing and distance of S. 44°30′ E., 98.5 feet, to a monumented point marked ''AP–3, SCS'', thence S. 45°06′ E., a distance of 2973.8 feet to a monumented point marked ''AP–2, SCS'', thence a distance of 212.3 feet along the arc of a curve to the right having a radius of 5829.6 feet and a chord bearing and distance of S. 44°06′ E., 212.3 feet, to a monumented point marked ''AP–1, SCS'', thence S. 42°57″ E., a distance of 2481.2 feet to the monumented Southwest corner of the Santa Cruz Spring Tract; thence on a new line on a line following the south boundary of the Santa Cruz Spring Tract, identical with the north boundary of the Santo Domingo Pueblo Grant (Hall Survey), on a bearing of S. 87°11′ 57″ E., a distance of 1516.65 feet to the 3 Mile corner, the point and place of beginning. All containing 1,769.4 acres, more or less.

Tract B—Cañada de Santa Fe

T. 15 N., R. 7 E., NMPM, Santa Fe County, New Mexico

A portion of the La Majada Grant lying south of the following described line (said portion being bounded on the south by the north boundary of the Mesita de Juana Lopez Grant as depicted on the official plat of confirmation, as surveyed by Rollin J. Reeves, U.S. Deputy Surveyor, in October, 1876, approved by the Surveyor General for New Mexico on February 28, 1877, and confirmed by Congress by the Act of January 28, 1879 (20 Stat. 592)):

Beginning at a point on the east boundary of the La Majada Grant, whence a brass cap marked, ''T 15 N R 7 E, LM, MJL, PI, S1, 1917'', bears S. 00°47′26″ W., along the East boundary of the La Majada Grant, a distance of 1440.00 feet, thence N. 77°00′02″ W., a distance of 59.54 feet to a point, thence S. 66°57′18″ W., a distance of 736.73 feet to a point, thence N. 62°26′19″ W., a distance of 640.22 feet to a point, thence S. 84°35′42″ W., a distance of 1142.33 feet to a point, thence N. 43°43′11″ W., a distance of 361.18 feet to a point, thence S. 64°27′27″ W., a distance of 864.34 feet to a point, thence S. 68°15′58″ W., a distance of 1166.64 feet to a point, thence S. 76°34′58″ W., a distance of 3404.79 feet to a point, thence N. 79°28′27″ W., a distance of 1445.63 feet to a point, thence S. 56°36′38″ W., a distance of 724.88 feet to a point of closing on the north boundary of the Mesita de Juana Lopez Grant, whence the ''Beginning Corner'' for the Mesita de Juana Lopez Grant bears N. 59°15′50″ W., a distance of 2300.10 feet, and whence ''AP–1'' of the Mesita de Juana Lopez Grant bears S. 59°15′50″ E., a distance of 1756.98 feet. All containing 297.3 acres, more or less.

Tract C, Canada de Cochiti

Sandoval County, New Mexico

T. 17 N., R. 4 E.,
Sec. 25, lots 1 to 4, inclusive, and S½S½;
Sec. 26, lots 1 to 4, inclusive, and S½S½;
Sec. 27, lots 1 to 4, inclusive, and S½S½;
Sec. 28, lots 1 to 4, inclusive, and S½S½;
Sec. 33, all;
Sec. 34, all;
Sec. 35, all;
Sec. 36, all.

Containing 3,931.68 acres, more or less;

Sandoval County, New Mexico

T. 16 N., R. 4 E.,
Sec. 4, lots 1 to 7, inclusive, SW¼NE¼, W½SE¼, S½NW¼, and SW¼;
Sec. 5, lots 1 and 6, E½E½SW¼NE¼, SE¼NE¼, E½E½W½SE¼, and E½SE¼;
Sec. 8, E½E½, and E½E½W½E½;
Sec. 9, lots 5 to 9, inclusive, and W½.

Containing 1,395.37 acres, more or less.

All of Tract C containing 5,327.05 acres, more or less.

The determination of the Assistant Secretary—Indian Affairs that this is a mandatory acquisition is final for the Department and can only be appealed to the Federal District Court. This notice will also serve as the final agency determination to take the land into trust and that the Secretary shall acquire title to the land no sooner than 30 days following publication of this document in the **Federal Register**.

Dated: June 25, 2012.

Donald E. Laverdure,

Acting Assistant Secretary—Indian Affairs.

[FR Doc. 2012–16415 Filed 7–3–12; 8:45 am]

BILLING CODE 4310–W7–P

DEPARTMENT OF THE INTERIOR

Bureau of Indian Affairs

Land Acquisitions: Pueblo of Santa Clara

AGENCY: Bureau of Indian Affairs, Interior.

ACTION: Notice of final agency determination to take land into trust.

SUMMARY: The Assistant Secretary—Indian Affairs, made a final agency determination to acquire approximately 1,219.24 acres of land into trust for the Pueblo of Santa Clara on January 27, 2012.

FOR FURTHER INFORMATION CONTACT: Sandra Ray, Realty Specialist, Southwest Regional Office, Bureau of Indian Affairs, 1001 Indian School Road NW., Albuquerque, NM 87104–2303; Telephone (505) 563–3337, *sandy.ray@bia.gov.*

SUPPLEMENTARY INFORMATION: This notice is published in the exercise of authority delegated by the Secretary of the Interior to the Assistant Secretary—Indian Affairs by 209 Departmental Manual 8.1.

This acquisition is mandatory under 25 U.S.C. 2216(c); the Pueblo de San Ildefonso Claims Settlement Act of 2005 (Pub. L. 109–286) dated September 27, 2006. The acres are described as follows:

Those certain lands situated in Rio Arriba County, New Mexico, and being more particularly described as follows:

New Mexico Principal Meridian

T. 20 N., R. 7 E.,

Sec. 17, S½NE¼SW¼, SW¼NW¼SW¼, SE¼NW¼SW¼, NW¼NE¼SE¼, NE¼NW¼SE¼, S½N½SE¼, N½SE¼SE¼;

All of the above-described land containing 120.00 acres, more or less, as derived from the official General Land Office plat of survey for T.20 N., R. 7 E., N.M.P.M., New Mexico, approved June 13, 1883, and filed in the records of the U.S. Department of the Interior, Bureau of Land Management, New Mexico State Office, in Santa Fe, New Mexico.

Together With

T. 20 N., R. 7 E.,
Sec. 17, lots 1 to 8, inclusive;
Sec. 18, lots 5 to 12, inclusive;
Sec. 19, lots 12 to 17, inclusive, lots 19, 21, 23, all that portion of Tract 37 within sec. 19, all that portion of Tract 38 within sec. 19, all that portion of Tract 39 within sec. 19, and all that portion of Tract 40 within sec. 19;
Sec. 20, lots 6, 7, 9 and 15, all that portion of Tract 39 within sec. 20, all that portion of Tract 40 within sec. 20, and all of Tract 41;
Sec. 21, lots 8, 9, 11 and 14;

All of the above-described land containing 1,099.24 acres, more or less, as derived from the official Bureau of Land Management plat of survey for T. 20 N., R. 7 E., N.M.P.M., New Mexico, approved November 26, 2008, and filed in the records of the U.S. Department of the Interior, Bureau of Land Management, New Mexico State Office, in Santa Fe, New Mexico.

The Total Area, as derived from the above-described survey plats, containing 1,219.24 acres, more or less.

The determination of the Assistant Secretary—Indian Affairs that this is a mandatory acquisition is final for the Department and can only be appealed to the Federal District Court. This notice will serve as the final agency determination to take the land into trust and that the Secretary shall acquire title to the land no sooner than 30 days following publication of this document in the **Federal Register**.

Dated: June 25, 2012.

Donald E. Laverdure,

Acting Assistant Secretary—Indian Affairs.

[FR Doc. 2012–16416 Filed 7–3–12; 8:45 am]

BILLING CODE 4310–W7–P

DEPARTMENT OF THE INTERIOR

Bureau of Indian Affairs

Poarch Band of Creek Indians—Alcohol Beverage Control Ordinance

AGENCY: Bureau of Indian Affairs, Interior.

ACTION: Notice.

SUMMARY: This notice publishes the Amendment to the Poarch Band of Creek Indians—Alcohol Beverage Control Ordinance. This Ordinance regulates and controls the possession, sale and consumption of liquor within the Poarch Band of Creek Indians' Indian country. This Ordinance allows for the possession and sale of alcoholic beverages within the jurisdiction of the Poarch Band of Creek Indians, will increase the ability of the tribal government to control the liquor distribution and possession of liquor within their Indian country, and at the same time, will provide an important source of revenue, the strengthening of the tribal government and the delivery of tribal services.

DATES: *Effective Date:* This Amendment is effective 30 days after publication July 5, 2012.

FOR FURTHER INFORMATION CONTACT: Chanda Joseph, Tribal Relations Specialist, Eastern Regional Office, Bureau of Indian Affairs, 545 Marriott Drive, Suite 700, Nashville, Tennessee 37214, Telephone: (615) 564–6750; Fax: (615) 564–6701; or, De Springer, Office of Indian Services, Bureau of Indian Affairs, 1849 C Street NW., MS–4513–MIB, Washington, DC 20240; Telephone: (202) 513–7626.

SUPPLEMENTARY INFORMATION: Pursuant to the Act of August 15, 1953, Public Law 83–277, 67 Stat. 586, 18 U.S.C. 1161, as interpreted by the Supreme Court in *Rice* v. *Rehner,* 463 U.S. 713 (1983), the Secretary of the Interior shall certify and publish in the **Federal Register** notice of adopted liquor ordinances for the purpose of regulating liquor transactions in Indian country. The purpose of this Ordinance is to govern the sale, possession and distribution of alcohol within the Poarch Band of Creek Indians' Indian country. On January 19, 2012, the Tribal Council of the Poarch Band of Creek Indians duly adopted Tribal Council Ordinance TCO 2012–001, amending the Poarch Band of Creek Indians Alcoholic Beverage Control Ordinance and the Criminal Code.

This notice is published in accordance with the authority delegated by the Secretary of the Interior to the Assistant Secretary—Indian Affairs. I certify that the Tribal Council of the Poarch Band of Creek Indians duly adopted Tribal Council Ordinance TCO 2012–001 on January 19, 2012.

Dated: June 25, 2012.

Donald E. Laverdure,

Acting Assistant Secretary—Indian Affairs.

The Poarch Band of Creek Indians—Alcoholic Beverage Control Ordinance, as amended, shall read as follows:

Chapter I—General Provisions

§ 40–1–1 Title

This section of Poarch Band of Creek Indians Tribal Code shall be known as the ''Alcoholic Beverage Control Ordinance''.

§ 40–1–2 Authority and Purpose

This Ordinance is adopted pursuant to the sovereign authority of the Poarch Band of Creek Indians and Article IV, Section 4(k), (m), (n) of the Constitution of the Poarch Band of Creek Indians and the Act of August 15, 1953, Public Law 83–277, 18 U.S.C. 1161. The introduction, possession, transportation, and sale of alcoholic beverages shall be lawful within the Indian country under the jurisdiction of the Tribe, provided that such introduction, possession, transportation, and sale are in conformity with the provisions of this Ordinance and the laws of the State of Alabama pursuant to 18 U.S.C. 1161.

§ 40–1–3 Definitions

As used in this Ordinance, the following words shall have the following meanings unless the context clearly requires otherwise:

(a) ''Alcoholic Beverages'' means any alcoholic, spirituous, vinous, fermented or other alcoholic beverage, or combination of liquors and mixed liquor, a part of which is spirituous, vinous, fermented or otherwise alcoholic, and all drinks or drinkable liquids, preparations or mixtures intended for beverage purposes, which contain one-half of one percent or more of alcohol by volume, and shall include liquor, Beer, and wine, both fortified and table wine.

(b) ''Applicant'' means any individual, entity, or enterprise seeking to sell or serve Alcoholic Beverages within Indian Country under the jurisdiction of the Tribe by submitting an application for a license or permit.

(c) ''Indian Country'' means land under the jurisdiction of an Indian tribe as defined by 18 U.S.C. § 1151.

(d) ''Minor'' means any person under age twenty-one (21) years of age.

(e) ''Tribe'' or ''Tribal'' means the Poarch Band of Creek Indians.

(f) ''Tribal Council'' means the duly elected governing body of the Poarch Band of Creek Indians.

(g) ''Ordinance'' means Poarch Band of Creek Indians Alcoholic Beverage Control Ordinance.

§ 40–1–4 Sovereign Immunity

Nothing contained in this Ordinance is intended to nor does in any way limit, alter, restrict, or waive the Tribe's sovereign immunity.

§ 40–1–5 Severability

If any clause, sentence, paragraph, section, or part of this Ordinance shall, for any reason be adjudicated by any court of competent jurisdiction, to be invalid or unconstitutional, such judgment shall not affect, impair, or invalidate the remainder thereof, but shall be confined in its operation to the clause, sentence, paragraph, section, or part thereof directly involved in the controversy in which the judgment shall have been rendered.

§ 40–1–6 Prior Inconsistent Law

Upon the effective date of this Ordinance, any prior, inconsistent resolutions, policies, ordinances and/or procedures of the tribal government and tribal enterprises are hereby superseded and/or amended to comply with this Ordinance.

§ 40–1–7 Effective Date

This Ordinance may be amended in accordance with the Tribal Constitution. All amendments shall be subject to the final approval of the Secretary of the Interior before they become effective. This Ordinance shall be deemed effective January 1, 2012 or upon approval by the Secretary of the Interior or whichever is later.

Chapter II—Administration

§ 40–2–1 Delegation of Authority

The Tribal Council authorizes the Public Safety Department to oversee and enforce this Ordinance.

§ 40–2–2 Primary Functions of Public Safety Department

The Public Safety Department shall have the authority and responsibility to:

(a) Administer and enforce all provisions of this Ordinance;

(b) Deny issue, or restrict alcoholic beverage control renewal licenses and permits to any Applicant that operates within the Indian Country under the jurisdiction of the Tribe;

(c) Revoke or suspend alcoholic beverage control licenses or permits of any licensee or permittee that operates within the Indian Country under the jurisdiction of the Tribe after notice and an opportunity to be heard has been provided to licensee or permittee;

(d) Maintain a current list of licensees and permittees for purposes of ensuring compliance with tribal and state license laws;

(e) Monitor licensee's compliance with this Ordinance and any conditions placed on any license or permit issued pursuant to the Ordinance;

(f) Ensure licensees are conducting employee TIPS training for new hires and as a part of ongoing employment;

(g) Establish forms and internal policies and procedures necessary to carry out the purposes of this Ordinance;

(h) Promulgate and enforce written rules and regulations not inconsistent with this Ordinance;

(i) Investigate any reports of a violation of this Ordinance and, if applicable, coordinate investigations and prosecutions with other law enforcement agencies;

(j) Impose civil sanctions and penalties in accordance with this Ordinance; and

(k) Submit any reports requested by Tribal Council regarding any aspect of the administration or enforcement of this Ordinance.

§ 40–2–3 Rules and Regulations

(a) Rules and regulations that the Public Safety Department deems necessary to administer its responsibilities under this Ordinance shall be promulgated only upon thirty (30) days' notice of the proposed rulemaking action, which shall be provided to the Tribal Council and posted at the tribal offices.

(b) The notice shall specify the purpose of the proposed regulation, the draft language of the proposed regulation, the factors the Public Safety Department has considered in its determination to enact the proposed regulation, and the Public Safety Office's address at which the Public Safety Department shall receive comments.

(c) During the notice period, the Public Safety Department shall receive comments regarding the proposed regulation at the designated mailing address.

(d) The comments received by the Public Safety Department shall be considered by the Public Safety Department at a public meeting, and the Public Safety Department shall make a final determination regarding the need for the proposed regulation on the basis of all the information available. All final determinations of the Public Safety Department shall be recorded in writing.

(e) Any final rules and regulations shall be provided to the Tribal Council. No later than thirty (30) days after the final determination of the Public Safety Department, the Tribal Council may veto the final rules or regulations or a portion thereof. A veto requires a ⅔ vote of the total membership of the Tribal Council. All members of the Tribal Council do not need to be present. Regulations will not be effective until the date the veto period expires or the date that the Tribal Council exercises its right to veto, whichever date is earlier. If the Tribal Council vetoes any clause, sentence, paragraph, section, or part of the final rules and regulations, then the Tribal Council shall clarify which, if any, provisions shall become effective at the time that it exercises its right to veto.

Chapter III—Requirements and Conditions

§ 40–3–1 License or Permit Required

No person shall engage in the sale of any alcoholic beverage within the Indian Country under the jurisdiction of the Tribe, unless duly licensed or permitted to do so by the State of Alabama and the Tribe in accordance with the terms of the Ordinance. A separate license or permit shall be required for each location where Alcoholic Beverages are to be sold or served.

§ 40–3–2 Privilege and Duties

(a) Notwithstanding any other provision of this Ordinance, a tribal alcoholic beverage license or permit is a mere permit for a fixed duration of time. A tribal alcoholic beverage license or permit is a revocable privilege and shall not be deemed a property right or vested right of any kind nor shall the granting of a tribal alcoholic beverage license or permit give rise to a presumption or legal entitlement to the granting of such license or permit for a subsequent time period.

(b) Applicants and licensees shall have a continuing duty to provide any materials, assistance or other information required by the Public Safety Department and to fully cooperate in any investigation conducted by or on behalf of the Public Safety Department. If any information provided on the application changes or becomes inaccurate in any way, the Applicant or licensee shall promptly notify the Commission of such changes or inaccuracies.

(c) Acceptance of a license by the licensee constitutes an agreement on the part of the licensee to be bound by the provisions of this Ordinance, applicable laws, and applicable rules and regulations as they are now, or as they may hereafter be amended or restated, and to cooperate fully with the Public Safety Department.

(d) It is the responsibility of the licensee to remain informed of the contents of this Ordinance and all other applicable laws, rules, regulations, amendments, provisions, and conditions, and ignorance thereof will not excuse violations.

§ 40–3–3 Assignment or Transfer

No tribal license or permit issued under this Ordinance shall be assigned or transferred without the written approval of the delegated authority as expressed by formal resolution and upon satisfaction of the conditions required for a license or permit as set out in § 40–3–4 of this Ordinance.

§ 40–3–4 Conditions of the Tribal License or Tribal Permit

Any Tribal license or permit issued under this Ordinance shall be subject to such reasonable conditions as the Public Safety Department shall determine, including, but not limited to the following:

(a) The licensee or permittee shall at all times maintain an orderly, clean, and neat establishment, both inside and outside the licensed premises.

(b) The licensee or permittee shall be subject to patrol by the Public Safety Department, and such other law enforcement officials as may be authorized under Tribal or federal law.

(c) The licensee or permittee shall be open to inspection by duly authorized Tribal officials at all times during the regular business hours.

(d) The licensee or permittee shall not sell Alcoholic Beverages within 200 feet of a polling place on tribal election days and including on special days of observance as designated by the Tribal Council.

(e) The licensee or permittee shall perform all acts and transactions under authority of the Tribal alcoholic beverage license or permit in conformity with this Ordinance and the terms of the Tribal license or permit.

(f) The licensee or permittee shall sell Alcoholic Beverages only for the personal use and consumption of the purchaser. Resale of any alcoholic beverage is prohibited.

(g) The licensee or permittee shall not sell, serve, deliver, or give any person under the age of 21 Alcoholic Beverages in the licensed establishment or at a permitted event. A licensee or permittee shall not allow any person under the age of 21 to consume Alcoholic Beverages in the licensed establishment or permitted event. Where there may be a question of a person's right to purchase an Alcoholic Beverage by reason of his or her age, such person shall be required to present any one of the following cards of identification which shows his or her correct age and bears his or her signature and photograph:

(1) A driver's license of any state or identification card issued by any state department of motor vehicles;

(2) United States active duty military ID;

(3) A passport; or

(4) A Poarch Creek tribal identification card or other recognized tribal identification card.

§ 40–3–5 License Term

A license shall be for a term of one year. License renewals are required each year.

§ 40–3–6 Permit Term

A permit shall be for a term of no more than three (3) days.

Chapter IV—License and Permit Process

§ 40–4–1 Initial License

(a) Application

An Applicant shall file an application for an initial alcoholic beverage license with the Public Safety Department. The initial application shall include, but not be limited to, the following information:

(1) The name and address of the Applicant;

(2) The description of the premises in which the Alcoholic Beverages are to be sold;

(3) Certification that the Applicant's establishment is not located closer than 500 feet from any church or school;

(4) Evidence that the Applicant is or will be duly licensed by the State of Alabama;

(5) Agreement by the Applicant to accept and abide by all conditions of the tribal license; and

(6) Agreement by the Applicant to:

(i) Post notice in a prominent, noticeable place on the premises where Alcoholic Beverages are to be sold for at least 30 days prior to consideration by Tribal Council for licensure, and

(ii) Publish notice at least twice in a local newspaper serving the community that may be affected by the license.

The notices shall state the date, time and place when the application shall be considered by the Tribal Council.

(b) Public Hearing

(1) If a complete application and all required documentation are received, the Public Safety Department shall schedule a public hearing before the Tribal Council.

(2) The Applicant shall provide notice of the public hearing by:

(i) Posting notice in a prominent, noticeable place on the premises where Alcoholic Beverages are to be sold for at least 30 days prior to consideration by Tribal Council, and

(ii) Publishing notice at least twice in a local newspaper serving the community that may be affected by the license.

The public hearing notice shall state the date, time, and place when the application shall be considered by the Tribal Council.

(3) The Applicant and any person(s) supporting or opposing the application shall have the right to be present and to offer sworn oral or documentary evidence relevant to the application.

(c) Disposition of Application

After the hearing, the Tribal Council shall determine whether to grant or deny the application, based on whether the Council, in its discretion, determines that granting the license is in the best interests of the Tribe. The decision of the Tribal Council shall be final and not subject to appeal.

§ 40–4–2 Renewal License

Application

Renewals applications shall be submitted each year no later than sixty (60) days prior to the expiration of the current license. The renewal application shall include, but not be limited to, the following information:

(1) Name and address of the Applicant;

(2) Description of the premises in which the Alcoholic Beverages is sold, if there has been any changes since the last license application;

(3) Certification that the Applicant's establishment is not located closer than 500 feet from any church or school;

(4) Evidence that the Applicant is or will be duly licensed by the State of Alabama;

(5) Agreement by the Applicant to accept and abide by all conditions of the Tribal license; and

(6) Documentation of any violations which occurred during the past licensed year and corrective actions in place to remedy the situation.

(a) Disposition of Application

After review of renewal application, the Public Safety Department shall determine whether to grant or deny the application based on the following:

(1) Whether the Applicant is in current compliance with the requirements and conditions for licensing as set forth in § 40–3–4;

(2) Whether the Public Safety Department in its discretion determines that granting the renewal license is in the best interests of the Tribe; and

(3) The decision of the Public Safety Department may be appealed in accordance with Chapter V herein.

§ 40–4–3 Permit

(a) Application

An Applicant seeking to sell or serve Alcoholic Beverages for no more than three (3) days shall file an application

for a permit with the Public Safety Department. The application shall be filed no later than thirty (30) days prior to the event. The permit application shall include, but not be limited to, the following information:

(1) The name and address of the Applicant;

(2) The description of the premises in which the Alcoholic Beverages are to be sold;

(3) Certification that the Applicant's establishment is not located closer than 500 feet from any church or school;

(4) Evidence that the Applicant is or will be duly licensed by the State of Alabama; and

(5) Agreement by the Applicant to accept and abide by all conditions of the Tribal license.

(b) Disposition of Application

After review of a permit application, the Public Safety Department, in its discretion, shall determine whether it is in the best interests of the Tribe to grant or deny the application. The decision of the Public Safety Department may be appealed in accordance with Chapter V herein.

Chapter V—Appeals and Enforcement

§ 40–5–1 Civil Violations; Sanctions and Penalties

(a) Any licensee or permittee who violates any of the provisions in this Ordinance or any rules and regulations promulgated under this Ordinance is subject to the imposition of civil penalties for such violation.

(b) To the fullest extent permitted by law, the Tribal Court shall have jurisdiction over any action brought by the Public Safety Department to enforce any and all penalties and/or sanctions provided for within this Ordinance.

(c) Based on the severity of the civil violation, the Public Safety Department shall determine what sanctions and/or penalties are warranted, including, but not limited to, the following:

(1) Suspension, restriction, or revocation of a license or permit;

(2) Issuance of a Notice of Violation and a corrective action plan;

(3) Issuance of a civil fine not to exceed $500 per violation;

(4) Initiation of an action in Tribal Court for appropriate injunctive relief if any alleged violation of the Ordinance or of the terms of any license or permit poses a threat to public health, safety or welfare; and

(5) Any other sanctions and/or penalties the Public Safety Department deems necessary to carry out the purposes of this Ordinance; however, the sanction and/or penalty may not violate any applicable laws.

(d) Any civil penalties issued under this Ordinance are in addition to, and do not supersede or limit any other remedies which may be available to the Tribe, including the filing of any action for injunctive relief in Tribal Court, or the filing of a criminal action in any court of competent jurisdiction.

§ 40–5–2 Appeals and Hearings

(a) Any action or decision taken by the Public Safety Department may be appealed by filing a written notice of appeal with the Tribal Chairman no later than fourteen (14) days after the appellant receives the written notice of the Public Safety Department's action or decision. The written notice of appeal shall include:

(1) A copy of the final decision; and

(2) The specific grounds for the appeal.

(b) All hearings shall be conducted by rules and regulations established in accordance with Tribal law.

(c) The appellant shall have the burden of proving by clear and convincing evidence that the Public Safety Department acted arbitrarily, unreasonably, or contrary to tribal law.

(d) The Tribal Council shall have thirty (30) days from the date of the hearing to issue a written decision to the Appellant.

(e) The decision of the Tribal Council shall be final and not subject to further appeal.

§ 40–5–3 Criminal Violations

Violations of the Alcoholic Beverage Control Ordinance by any person subject to the criminal jurisdiction of the Tribe may be prosecuted under the Poarch Band of Creek Indians Criminal Code (Title 8).

Be it further ordained that the Tribal Council hereby adds the following provision to the Criminal Code as subsection (a) of § 8–7–1 and all other subsections in § 8–7–1 shall be renumbered accordingly:

(a) *Alcoholic Beverages.* Alcoholic Beverages shall mean any alcoholic, spirituous, vinous, fermented or other alcoholic beverage, or combination of liquors and mixed liquor, a part of which is spirituous, vinous, fermented or otherwise alcoholic, and all drinks or drinkable liquids, preparations or mixtures intended for beverage purposes, which contain one-half of one percent or more of alcohol by volume, and shall include liquor, beer, and wine, both fortified and table wine.

Be it further ordained that the Tribal Council hereby amends § 8–7–5 of the Criminal Code as follows:

§ 8–7–5 Unlawful Possession of Alcoholic Beverages

(a) A person commits the crime of unlawful possession of alcoholic beverages if:

(1) A person possess, sells, trades, transports, manufactures, or distributes any Alcoholic Beverage, except as provided in the Poarch Band of Creek Indians Alcoholic Beverage Control Ordinance; or

(2) A person purchases or buys Alcoholic Beverages from any person or entity does not have a license or permit as required by the Alcoholic Beverage Control Ordinance.

(b) Unlawful possession of alcoholic beverages except as provided in the Poarch Band of Creek Indians Alcoholic Beverage Control Ordinance is a Class B Misdemeanor.

Be it further ordained that the Tribal Council hereby enacts § 8–7–6 through § 8–7–8 of the Criminal Code as follows:

§ 8–7–6 Furnishing Alcoholic Beverages to Minors

(a) A person commits the crime of furnishing alcoholic beverages to minors if the person:

(1) Sells, delivers, furnishes, or gives away Alcoholic Beverages to any person under the age of 21, or permits any person under the age of 21 to drink, consume, or possess any Alcoholic Beverages; or

(2) Transfers in any manner an identification of age to a minor for the purpose of permitting such minor to obtain any Alcoholic Beverage.

(b) Furnishing alcoholic beverages to minors is a Class C Misdemeanor.

§ 8–7–7 Possession of Alcoholic Beverages by Minors

(a) Notwithstanding the provisions of Section 8–7–5, a person commits the crime of possession of alcoholic beverages by minors if the person:

(1) Purchases, acquires, consumes, possesses, or transports any Alcoholic Beverages within the Indian Country under the jurisdiction of the Tribe while under the age of 21; or

(2) Knowingly uses or attempts to use a false, forged, or deceptive driver's license to obtain or attempt to obtain Alcoholic Beverages.

Provided, however, it shall not be unlawful for a person under the age of 21 who is an employee of an off-premises retail licensee to handle, transport, or sell any Alcoholic Beverage if the person is acting within the line and scope of his or her employment. There must be an adult employee of the licensee present at all times a licensed establishment is open for business.

(b) Unlawful possession of alcoholic beverages is a Class C Misdemeanor.

§ 8–7–8 Fraudulent Submissions in Connection With a License or Permit

(a) A person commits the crime of fraudulent submissions in connection with a license or permit if the person makes, provides, or swears to any false or fraudulent statement, contention, or documentation in connection with an application for an alcoholic beverage license or permit under the Poarch Band of Creek Indians Alcoholic Beverage Control Ordinance.

(b) Fraudulent submissions in connection with a license or permit shall be considered a Class C Misdemeanor.

[FR Doc. 2012–16383 Filed 7–3–12; 8:45 am]

BILLING CODE 4310–4J–P

DEPARTMENT OF THE INTERIOR

Bureau of Indian Affairs

Swinomish Indian Tribal Community—Title 15, Chapter 4: Liquor Legalization, Regulation and License Code

AGENCY: Bureau of Indian Affairs, Interior.

ACTION: Notice.

SUMMARY: This notice publishes Title 15, Chapter 4: Liquor Legalization, Regulation and License Code for the Swinomish Indian Tribal Community. The Code regulates and controls the possession, sale and consumption of liquor within the Swinomish Indian Tribal Community's Indian country. This Code allows for the possession and sale of alcoholic beverages within the jurisdiction of the Swinomish Indian Tribal Community, will increase the ability of the tribal government to control the distribution and possession of liquor within their Indian country, and at the same time, will provide an important source of revenue, the strengthening of the tribal government and the delivery of tribal services.

DATES: *Effective Date:* This Ordinance is effective 30 days after July 5, 2012.

FOR FURTHER INFORMATION CONTACT: Betty Scissons, Tribal Government Specialist, Northwest Regional Office, Bureau of Indian Affairs, 911 NE. 11th Avenue, Portland, OR 97232, Phone: (503) 231–6723; Fax: (503) 231–6731: or De Springer, Office of Indian Services, Bureau of Indian Affairs, 1849 C Street NW., MS–4513–MIB, Washington, DC 20240; Telephone (202) 513–7626.

SUPPLEMENTARY INFORMATION: Pursuant to the Act of August 15, 1953, Public Law 83–277, 67 Stat. 586, 18 U.S.C. 1161, as interpreted by the Supreme Court in *Rice* v. *Rehner,* 463 U.S. 713 (1983), the Secretary of the Interior shall certify and publish in the **Federal Register** notice of adopted liquor ordinances for the purpose of regulating liquor transactions in Indian country. The Swinomish Indian Tribal Community Senate adopted Ordinance No. 296, Enacting Swinomish Tribal Code Title 15, Chapter 4: Liquor Legalization, Regulation and License Code, on August 4, 2011.

This notice is published in accordance with the authority delegated by the Secretary of the Interior to the Assistant Secretary—Indian Affairs. I certify that the Swinomish Indian Tribal Community Senate adopted Ordinance No. 296, enacting Swinomish Tribal Code Title 15, Chapter 4: Liquor Legalization, Regulation and License Code, on August 4, 2011.

Dated: June 25, 2012.

Donald E. Laverdure

Acting Assistant Secretary—Indian Affairs.

The Swinomish Indian Tribal Community Title 15, Chapter 4: Liquor Legalization, Regulation and License Code shall read as follows:

15–04.010 Title

This Chapter shall be referred to as the Liquor Legalization, Regulation and License Code.

15–04.020 Authority

This Chapter is enacted pursuant to authority provided by Article VI, Section (1)(h), (k) and (1) of the Constitution. In addition, this Chapter is adopted in accordance with 18 U.C.S.A. § 1161.

15–04.030 Definitions

For purposes of this Chapter, unless otherwise expressly provided, the following definitions shall apply:

(A) ''*Engaging in the retail intoxicating beverage business''* means either maintaining a retail liquor, beer and/or wine establishment within the Indian Country under the jurisdiction of the Tribe or making sales of liquor, beer and/or wine at retail within the Indian Country under the jurisdiction of the Tribe.

(B) ''*Indian country,''* consistent with the meaning given in 18 U.S.C. 1151, 1154, and 1156, means:

(1) All land within the limits of the Swinomish Indian Reservation under the jurisdiction of the United States government, notwithstanding the issuance of any patent provided that the term ''patent'' does not include fee-patented lands in non-Indian communities; and

(2) All Indian allotments or other lands held in trust for a Swinomish tribal member or the Tribe, or otherwise subject to a restriction against alienation imposed by the United States, the Indian titles to which have not been extinguished.

(C) ''*Reservation''* means all lands and waters within the exterior boundaries of the Swinomish Indian Reservation.

(D) ''*Senate''* means the Swinomish Indian Senate.

(E) ''*Tribal License''* means a license issued by the Swinomish Indian Tribal Community to any person, association, firm, corporation, or partnership, or any individual or group of individuals wishing to engage in the retail sale of liquor, beer and/or wine within the Indian Country under the jurisdiction of the Tribe.

(F) ''*Tribe''* means the Swinomish Indian Tribal Community.

15–04.040 Legalizing the Introduction, Sale or Possession

The introduction, sale or possession of intoxicating beverages shall be lawful within the Indian Country under the jurisdiction of the Tribe, provided that such introduction, sale or possession is in conformity with the laws of the State of Washington and in conformity with this Chapter.

15–04.050 Application for Tribal License Required and License Fee

(A) Any person, association, firm, corporation, or partnership, or any individual or group of individuals engaged in the retail sale of intoxicating beverages within the Indian Country under the jurisdiction of the Tribe, regardless of whether the principal place of business is or is not located outside the Reservation, is required to have a Tribal License.

(B) A Tribal License shall run from July 1st of one year through the 30th day of June the following year. The Senate or the Senate's designee shall charge an annual fee in accordance with the attached fee schedule.

(C) Applicants for an initial Tribal License and those seeking to renew a Tribal License shall make application and pay the annual fee to the Senate or its designee by June 30th of each year for the ensuing year, except if an initial application is made between January 1st and July 1st, the license fee shall be cut in half.

(D) If the Senate or its designee denies an application for a Tribal License or denies an application to renew a Tribal License, the fee shall be returned to the applicant.

15–04.060 Investigation of Applicant for Tribal License

Before the Senate issues a Tribal License, the applicant shall be investigated as to moral character and as to whether or not such person is acceptable to the members of the Tribe to engage in a retail intoxicating beverage business within the Indian Country under the jurisdiction of the Tribe. The Senate or its designee may, in its discretion, set a time for public hearing and give reasonable notice for the time and place thereof before acting upon an application for a Tribal License.

15–04.070 Tribal License May Be Revoked

A Tribal License may be revoked only for cause and upon a hearing, conducted by the Senate or its designee, with notice being mailed by registered mail to the holder of the Tribal License ten (10) days prior to such hearing, except a Tribal License may not be transferred without the approval and consent of the Senate. The grounds for revocation of a Tribal License are:

(A) The failure to pay the Tribal License fee each year;

(B) The violation of tribal ordinances duly passed or the laws of the State of Washington;

(E) The acquisition of a Tribal License by fraud, misrepresentation, concealment, or through inadvertence or mistake;

(F) The denial of the Senate or its authorized representatives, including authorized law enforcement agencies, access to any place where a licensed activity is conducted, or the failure to promptly produce for inspection or audit any book, record, document, or item required by law or Senate rule;

(G) The denial, suspension, or repeal of any liquor-related license, permit, or certification by any tribal, state or federal regulatory agency; or

(H) Transfer or attempted transfer of a Tribal License without the approval and consent of the Senate.

15–04.080 Transfer of Tribal Licenses

(A) No Tribal License may be transferred without the approval of the Senate or its designee.

(B) Persons wishing to transfer a Tribal License must file an application for a transfer with the Senate or the Senate's designee. The application for a transfer shall include:

(1) The name(s) of the persons, group, or association to whom the transfer is to be made;

(2) Any other information required of initial applicants in accordance with Section 15–04.050; and

(3) A statement, signed by the proposed transferee, designating the location of the premises where the Tribal License is to be used and operated.

(C) Before any transfer of a Tribal License is approved, the Tribe shall investigate the moral character of the transferee and determine whether the proposed transferee is acceptable to the members of the Tribe to engage in said retail intoxicating beverage business within the Indian Country under the jurisdiction of the Tribe. The Senate may, in its discretion, set a time for public hearing and give reasonable notice of the time and place thereof before acting upon an application for transfer.

(D) The approval of a transfer of a Tribal License shall be given at a duly called, noticed and convened session of the Senate.

15–04.090 Notification of the Liquor Control Board

It shall be the responsibility of Tribal License holders to notify the Liquor Control Board of Washington State that an application has been made for a transfer of a Tribal License. The requisite Tribal License and state permit are required before any person, association, firm, corporation, or partnership, or any individual or group of individuals may engage in the retail sale of intoxicating beverages within the Indian Country under the jurisdiction of the Tribe.

15–04.100 Tribal Liquor License Fee Schedule

The following fees shall be assessed for license under this Chapter:

Beer and Wine Gift Delivery	$75.
Beer and Wine Specialty Shop	100.
Grocery Store	150.
International Exporter Endorsement	500.
Motel	500.
Nonprofit Arts Organization	250.
Private Club—Beer and Wine	180.
Private Club—Spirits, Beer and Wine	720.
Non-Club Event Endorsement	900.
Public House	1,000.
Restaurant—Beer and/or Wine.	
Beer	200.
Wine	200.
Off-Premises	120.
Caterer's Endorsement	350.
Restaurant—Spirits, Beer, & Wine.	
Less than 50% Dedicated Dining Area	2,000.
50% or More Dedicated Dining Area	1,600.
Service Bar Only	1,000.
Caterer's Endorsement	350.
Duplicate License.	
Airport Terminal	25% of annual license fee.
Civic Center	10.
Privately Owned Facility Open to the Public	20.
Snack Bar	125.
Sports/Entertainment Facility	2,500.
Caterer's Endorsement	350.
Tavern—No Persons Under 21 Allowed.	
Beer	200.
Wine	200.
Off-Premises	120.

15–04.110 Senate Regulations

The Senate may promulgate regulations consistent with this Chapter and applicable state and federal law that alter the amount or categories of fees to be paid and that further describe the process to be followed in license application, issuance, renewal, revocation or suspension, or transfer.

15–04.120 Repealer

Any tribal laws, resolutions or ordinances that prohibited the sale, introduction or possession of intoxicating beverages are repealed. Ordinance No. 27 is repealed. The Swinomish Liquor Regulations promulgated August 4, 2011, are repealed.

15–04.130 Effective Date

This Chapter shall become effective upon approval by the Secretary of the Interior and publication of the ordinance in the **Federal Register** in accordance with 18 U.S.C. 1161.

[FR Doc. 2012–16382 Filed 7–3–12; 8:45 am]

BILLING CODE 4310–4J–P

DEPARTMENT OF THE INTERIOR

National Park Service

[WASO–NRSS–10750; 2490–STC]

Proposed Information Collection; Comment Request: Appalachian Trail Management Partner Survey

AGENCY: National Park Service (NPS), Interior.

ACTION: Notice of an extension of a currently approved information collection (1024–0259); request for comments.

SUMMARY: We (National Park Service) will ask the Office of Management and Budget (OMB) to approve the information collection (IC) described below. This collection is to track the satisfaction of federal, state, and not-for-profit partner organizations and agencies receiving support from the Appalachian Trail Park Office (ATPO) to protect trail resources and provide for the public enjoyment and visitor experience of the Appalachian National Scenic Trail (Trail). To comply with the Paperwork Reduction Act of 1995 and as a part of our continuing efforts to reduce paperwork and respondent burden, we invite the general public and other federal agencies to comment on this IC. The PRA (44 U.S.C. 3501, *et seq.*) provides that we may not conduct or sponsor and a person is not required to respond to a collection unless it displays a currently valid OMB control number and current expiration date.

DATES: Please submit your comment on or before September 4, 2012.

ADDRESSES: Please send your comments to the IC to Phadrea Ponds, Information Collections Coordinator, National Park Service, 1201 Oakridge Drive, Fort Collins, CO 80525 (mail); or *phadrea_ponds@nps.gov* (email). Please reference Information Collection 1024–0259 APPALACHIAN NATIONAL SCENIC TRAIL, in the subject line.

FOR FURTHER INFORMATION CONTACT: Angela Walters, Appalachian National Scenic Trail (ANST), NPS, P.O. Box 50, Harpers Ferry, WV 25425; or via phone at (304) 535–6278; or via fax at (304) 535–6270, or via email at *angela_walters@nps.gov.*

SUPPLEMENTARY INFORMATION:

I. Abstract

The Appalachian National Scenic Trail (ANST) is an unusual unit of the national park system, managed through a decentralized volunteer-based cooperative management system involving: eight national forests, six other national park units, agencies in fourteen states, the Appalachian Trail Conservancy, and citizen volunteers from 30 affiliated trail club organizations. The Appalachian Trail Management Partner Survey (ATMPS) will be used to measure performance through a partner satisfaction survey. The purpose of the ATMPS is to track the satisfaction of partner organizations receiving support from the Appalachian Trail Park Office (ATPO). Progress is measured by evaluating the quality of support provided by ATPO. Data from the proposed survey is needed to assess performance regarding NPS GPRA goal IIb0. HPS performance on all goals measured in this study will contribute to DOI Department-wide performance reports.

II. Data

OMB Control Number: 1024–0259.

Title: Appalachian Trail Management Partner Survey.

Type of Request: Extension of a currently approved collection.

Affected Public: General public; Partners in the Appalachian Trail Cooperative Management System.

Respondent's Obligation: Voluntary.

Frequency of Collection: Annually.

Estimated Annual Number of Respondents: 200 (150 respondents and 50 non-respondents).

Estimated Total Annual Burden Hours: 23 hours (3 minutes for respondents and 1 minute for non-respondents).

Estimated Reporting and Recordkeeping ''Non-Hour Cost'' Burden: None.

Comments: We invite comments concerning this IC on: (1) Whether or not the proposed collection of information is necessary for the agency to perform its duties, including whether or not the information will have practical utility; (2) the accuracy of our estimate of the burden for this collection of information; (3) ways to enhance the quality, utility, and clarity of the information to be collected; and (4) ways to minimize the burden of the collection of information on respondents, including the use of automated collection techniques or other forms of information technology.

Please note that the comments submitted in response to this notice are a matter of public record. Before including your address, phone number, email address, or other personal identifying information in your comment, you should be aware that your entire comment, including your personal identifying information, may be made publicly available at any time. While you can ask OMB in your comment to withhold your personal identifying information from public review, we cannot guarantee that it will be done.

Dated: June 29, 2012.

Madonna L. Baucum,

Acting Information Collection Clearance Officer, National Park Service.

[FR Doc. 2012–16476 Filed 7–3–12; 8:45 am]

BILLING CODE 4312–52–P

INTERNATIONAL TRADE COMMISSION

[Investigation No. 337–TA–832]

Certain Ink Application Devices and Components Thereof and Methods of Using the Same Determination To Review in Part an Initial Determination Finding All Respondents in Default; Request for Submissions on Remedy, Public Interest, and Bonding as to Certain Respondents

AGENCY: U.S. International Trade Commission.

ACTION: Notice.

SUMMARY: Notice is hereby given that the U.S. International Trade Commission has determined to review in part the presiding administrative law judge's (''ALJ'') initial determination (''ID'') (Order No. 7) finding respondents T-Tech Tattoo Device Inc. of Ontario, Canada (''T-Tech''); Yiwu Beyond Tattoo Equipments Co., Ltd. of Yiwu

City, China (''Yiwu''); and Guangzhou Pengcheng Cosmetology Firm of Guangzhou, China (''Guangzhou'') in default.

FOR FURTHER INFORMATION CONTACT: Megan M. Valentine, Office of the General Counsel, U.S. International Trade Commission, 500 E Street SW., Washington, DC 20436, telephone (202) 708–2301. Copies of non-confidential documents filed in connection with this investigation are or will be available for inspection during official business hours (8:45 a.m. to 5:15 p.m.) in the Office of the Secretary, U.S. International Trade Commission, 500 E Street, SW., Washington, DC 20436, telephone (202) 205–2000. General information concerning the Commission may also be obtained by accessing its Internet server at *http://www.usitc.gov.* The public record for this investigation may be viewed on the Commission's electronic docket (EDIS) at *http://edis.usitc.gov.* Hearing-impaired persons are advised that information on this matter can be obtained by contacting the Commission's TDD terminal on (202) 205–1810.

SUPPLEMENTARY INFORMATION: The Commission instituted this investigation on March 6, 2012, based on a complaint filed by MT.Derm GmbH of Berlin, Germany and Nouveau Cosmetique USA Inc. of Orlando, Florida (collectively ''Complainants'') alleging violations of section 337 of the Tariff Act of 1930 (19 U.S.C. 1337), as amended, in the importation into the United States, the sale for importation, and the sale within the United States after importation of certain ink application devices and components thereof and methods of using the same by reason of infringement of certain claims of U.S. Patent Nos. 6,345,553 and 6,505,530. 77 FR 13351 (Mar. 6, 2012). The Commission's Notice of Investigation (''NOI'') named T-Tech, Yiwu, and Guangzhou as respondents. The Complaint was served on March 1, 2012. The Office of Unfair Import Investigations was named as a party.

On April 16, 2012, Complainants filed a motion seeking a determination that respondents T-Tech, Yiwu, and Guangzhou be found in default based on their failure to respond to the Complaint and Notice of Investigation. On April 17, 2012, the Commission investigative attorney (''IA'') filed a response in support of the motion. On May 1, 2012, the ALJ issued Order No. 5, ordering the respondents to show cause by close of business on May 16, 2012, why they should not be found in default. No responses were received.

On May 31, 2012, the ALJ issued the subject ID, granting the motion for default pursuant to section 210.16(a)(1) of the Commission's Rules of Practice and Procedure (19 CFR 210.16(a)(1)). On June 6, 2012, T-Tech submitted correspondence to the Commission stating that it had not received any prior communication from the Commission and arguing that the ID finding it in default should be reviewed. On June 7, 2012, the IA filed a Request for Extension of Time for Filing a Petition for Review of Order No. 7. The Chairman granted the motion on June 8, 2012. On June 13, 2012, the IA filed a petition for review of Order No. 7 as to the finding of default against T-Tech. In its petition, the IA notes that the FedEx shipping log indicates that the shipment containing the Complaint and NOI was incorrectly addressed and that it was redirected to another address, but was not received. The IA further notes that the FedEx shipping log indicates that on March 14, 2012, the shipment was intended to be returned to the Commission as undelivered, but that it was not returned, nor did FedEx notify the Commission of the delivery failure. On June 19, 2012, Complainants filed a response to the IA's petition.

Having examined the record of this investigation, including the subject ID, T-Tech's correspondence, the petition for review, and the response thereto, the Commission has determined to review the subject ID in part, and, on review, to reverse the finding of default against T-Tech.

The Commission has determined not to review the subject ID findings that Yiwu and Guangzhou are in default. Pursuant to section 337(g)(1) (19 U.S.C. 1337(g)(1)) and section 210.16(c) of the Commission's Rules of Practice and Procedure (19 CFR 210.16(c)), the Commission presumes the facts alleged in the complaint to be true with respect to Yiwu and Guangzhou.

In connection with the final disposition of this investigation as to Yiwu and Guangzhou, the Commission may (1) issue an order that could result in the exclusion of the subject articles from entry into the United States, and/or (2) issue one or more cease and desist orders that could result in the respondent(s) being required to cease and desist from engaging in unfair acts in the importation and sale of such articles. Accordingly, the Commission is interested in receiving written submissions that address the form of remedy, if any, that should be ordered. If a party seeks exclusion of an article from entry into the United States for purposes other than entry for consumption, the party should so indicate and provide information establishing that activities involving other types of entry either are adversely affecting it or likely to do so. For background, see *Certain Devices for Connecting Computers via Telephone Lines,* Inv. No. 337–TA–360, USITC Pub. No. 2843 (Commission Opinion at 7–10) (December 1994).

If the Commission contemplates some form of remedy, it must consider the effects of that remedy upon the public interest. The factors the Commission will consider include the effect that an exclusion order and/or cease and desist orders would have on (1) The public health and welfare, (2) competitive conditions in the U.S. economy, (3) U.S. production of articles that are like or directly competitive with those that are subject to investigation, and (4) U.S. consumers. The Commission is therefore interested in receiving written submissions that address the aforementioned public interest factors in the context of this investigation.

If the Commission orders some form of remedy, the U.S. Trade Representative, as delegated by the President, has 60 days to approve or disapprove the Commission's action. *See* Presidential Memorandum of July 21, 2005, 70 FR 43251 (July 26, 2005). During this period, the subject articles would be entitled to enter the United States under bond, in an amount determined by the Commission and prescribed by the Secretary of the Treasury. The Commission is therefore interested in receiving submissions concerning the amount of the bond that should be imposed if a remedy is ordered.

Written Submissions: The parties to the investigation, interested government agencies, and any other interested persons are encouraged to file written submissions on the issues of remedy, the public interest, and bonding. Complainants and the IA are also requested to submit proposed remedial orders for the Commission's consideration. Complainants are also requested to state the dates that the patents expire and the HTSUS numbers under which the accused products are imported. The written submissions and proposed remedial orders must be filed no later than close of business on July 13, 2012. Reply submissions must be filed no later than the close of business on July 20, 2012. No further submissions on these issues will be permitted unless otherwise ordered by the Commission.

Persons filing written submissions must file the original document electronically on or before the deadlines stated above and submit 8 true paper

copies to the Office of the Secretary by noon the next day pursuant to section 210.4(f) of the Commission's Rules of Practice and Procedure (19 CFR 210.4(f)). Submissions should refer to the investigation number (''Inv. No. 337–TA–832'') in a prominent place on the cover page and/or the first page. (*See* Handbook for Electronic Filing Procedures, *http://www.usitc.gov/secretary/fed_reg_notices/rules/handbook_on_electronic_filing.pdf*). Persons with questions regarding filing should contact the Secretary (202–205–2000).

Any person desiring to submit a document to the Commission in confidence must request confidential treatment. All such requests should be directed to the Secretary to the Commission and must include a full statement of the reasons why the Commission should grant such treatment. *See* 19 CFR 201.6. Documents for which confidential treatment by the Commission is properly sought will be treated accordingly. A redacted non-confidential version of the document must also be filed simultaneously with the any confidential filing. All non-confidential written submissions will be available for public inspection at the Office of the Secretary and on EDIS.

The authority for the Commission's determination is contained in section 337 of the Tariff Act of 1930, as amended (19 U.S.C. 1337), and in sections 210.42–46 and 210.50 of the Commission's Rules of Practice and Procedure (19 CFR 210.42–46 and 210.50).

Issued: June 29, 2012.

By order of the Commission.

Lisa R. Barton,

Acting Secretary to the Commission.

[FR Doc. 2012–16430 Filed 7–3–12; 8:45 am]

BILLING CODE 7020–02–P

INTERNATIONAL TRADE COMMISSION

[Investigation Nos. 731–TA–865–867 (Second Review)]

Stainless Steel Butt-Weld Pipe Fittings From Italy, Malaysia, and the Philippines

Determination

On the basis of the record [1] developed in the subject five-year reviews, the United States International Trade Commission (Commission) determines, pursuant to section 751(c) of the Tariff Act of 1930 (19 U.S.C. 1675(c)), that revocation of the antidumping duty orders on stainless steel butt-weld pipe fittings From Italy, Malaysia, and the Philippines would be likely to lead to continuation or recurrence of material injury to an industry in the United States within a reasonably foreseeable time.

Background

The Commission instituted these reviews on November 1, 2011 (76 FR 67473) and determined on February 6, 2012 that it would conduct expedited reviews (77 FR 10773, February 23, 2012). On March 21, 2012, the Commission revised its schedule in these expedited reviews (77 FR 18266, March 27, 2012).

The Commission transmitted its determinations in these reviews to the Secretary of Commerce on June 28, 2012. The views of the Commission are contained in USITC Publication 4337 (June 2012), entitled *Stainless Steel Butt-Weld Pipe Fittings from Italy, Malaysia, and the Philippines:* Inv. Nos. 731–TA–865–867 (Second Review).

Issued: June 28, 2012.

By order of the Commission.

Lisa R. Barton,

Acting Secretary to the Commission.

[FR Doc. 2012–16360 Filed 7–3–12; 8:45 am]

BILLING CODE 7020–02–P

[1] The record is defined in sec. 207.2(f) of the Commission's Rules of Practice and Procedure (19 CFR 207.2(f)).

INTERNATIONAL TRADE COMMISSION

[Investigation No. 337–TA–851]

Certain Integrated Circuit Packages Provided With Multiple Heat-Conducting Paths and Products Containing Same: Institution of Investigation

AGENCY: U.S. International Trade Commission.

ACTION: Notice.

SUMMARY: Notice is hereby given that a complaint was filed with the U.S. International Trade Commission on May 31, 2012, under section 337 of the Tariff Act of 1930, as amended, on behalf of Industrial Technology Research Institute of Taiwan and ITRI International of San Jose, California. The complaint alleges violations of section 337 based upon the importation into the United States, the sale for importation, and the sale within the United States after importation of certain integrated circuit packages provided with multiple heat-conducting paths and products containing same by reason of infringement of certain claims of U.S. Patent No. 5,710,459 (''the '459 patent''). The complaint further alleges that an industry in the United States exists as required by subsection (a)(2) of section 337.

The complainants request that the Commission institute an investigation and, after the investigation, issue an exclusion order and cease and desist order.

ADDRESSES: The complaint, except for any confidential information contained therein, is available for inspection during official business hours (8:45 a.m. to 5:15 p.m.) in the Office of the Secretary, U.S. International Trade Commission, 500 E Street SW., Room 112, Washington, DC 20436, telephone (202) 205–2000. Hearing impaired individuals are advised that information on this matter can be obtained by contacting the Commission's TDD terminal on (202) 205–1810. Persons with mobility impairments who will need special assistance in gaining access to the Commission should contact the Office of the Secretary at (202) 205–2000. General information concerning the Commission may also be obtained by accessing its internet server at *http://www.usitc.gov.* The public record for this investigation may be viewed on the Commission's electronic docket (EDIS) at *http://edis.usitc.gov.*

FOR FURTHER INFORMATION CONTACT: The Office of Unfair Import Investigations, U.S. International Trade Commission, telephone (202) 205–2560.

Authority: The authority for institution of this investigation is contained in section 337 of the Tariff Act of 1930, as amended, and in section 210.10 of the Commission's Rules of Practice and Procedure, 19 CFR 210.10 (2012).

Scope of Investigation: Having considered the complaint, the U.S. International Trade Commission, on June 28, 2012, *ordered that*—

(1) Pursuant to subsection (b) of section 337 of the Tariff Act of 1930, as amended, an investigation be instituted to determine whether there is a violation of subsection (a)(1)(B) of section 337 in the importation into the United States, the sale for importation, or the sale within the United States after importation of certain integrated circuit packages provided with multiple heat-conducting paths and products containing same that infringe one or more of claims 1 and 2 of the '459 patent, and whether an industry in the United States exists as required by subsection (a)(2) of section 337;

(2) For the purpose of the investigation so instituted, the following are hereby named as parties upon which this notice of investigation shall be served:

(a) The complainants are:

Industrial Technology Research Institute, 195, Sec. 4, Chung Hsing Road, Chutung, Hsinchu, Taiwan 31040, ITRI International, 2880 Zanker Road, Suite 109, San Jose, CA 95134.

(b) The respondents are the following entities alleged to be in violation of section 337, and are the parties upon which the complaint is to be served:

LG Electronics, Inc., LG Twin Towers, 20 Yeouido-dong, Yeongdeungpo-gu, Seoul 150–721, Republic of Korea.

LG Electronics, U.S.A., Inc., 1000 Sylvan Avenue, Englewood Cliffs, NJ 07632.

(c) The Office of Unfair Import Investigations, U.S. International Trade Commission, 500 E Street SW., Suite 401, Washington, DC 20436; and

(3) For the investigation so instituted, the Chief Administrative Law Judge, U.S. International Trade Commission, shall designate the presiding Administrative Law Judge.

Responses to the complaint and the notice of investigation must be submitted by the named respondents in accordance with section 210.13 of the Commission's Rules of Practice and Procedure, 19 CFR 210.13. Pursuant to 19 CFR 201.16(d)–(e) and 210.13(a), such responses will be considered by the Commission if received not later than 20 days after the date of service by the Commission of the complaint and the notice of investigation. Extensions of time for submitting responses to the complaint and the notice of investigation will not be granted unless good cause therefor is shown.

Failure of a respondent to file a timely response to each allegation in the complaint and in this notice may be deemed to constitute a waiver of the right to appear and contest the allegations of the complaint and this notice, and to authorize the administrative law judge and the Commission, without further notice to the respondent, to find the facts to be as alleged in the complaint and this notice and to enter an initial determination and a final determination containing such findings, and may result in the issuance of an exclusion order or a cease and desist order or both directed against the respondent.

By Order of the Commission.

Issued: June 28, 2012.

Lisa R. Barton,

Acting Secretary to the Commission.

[FR Doc. 2012–16359 Filed 7–3–12; 8:45 am]

BILLING CODE 7020–02–P

INTERNATIONAL TRADE COMMISSION

[Investigation Nos. 701–TA–253 and 731–TA–132, 252, 271, 273, 532–534 and 536 (Third Review)]

Certain Circular Welded Pipe and Tube From Brazil, India, Korea, Mexico, Taiwan, Thailand, and Turkey

Determinations

On the basis of the record [1] developed in the subject five-year reviews, the United States International Trade Commission (Commission) determines, pursuant to section 751(c) of the Tariff Act of 1930 (19 U.S.C. 1675(c)), that revocation of the countervailing duty order on certain circular welded pipe and tube from Turkey and the antidumping duty orders on certain circular welded pipe and tube from Brazil, India, Korea, Mexico, Taiwan, Thailand, and Turkey would be likely to lead to continuation or recurrence of material injury to an industry in the United States within a reasonably foreseeable time.

Background

The Commission instituted these reviews on July 1, 2011 (76 FR 38691) and determined on October 4, 2011 that it would conduct full reviews (76 FR 65748, October 24, 2011). Notice of the scheduling of the Commission's reviews and of a public hearing to be held in connection therewith was given by posting copies of the notice in the Office of the Secretary, U.S. International Trade Commission, Washington, DC, and by publishing the notice in the **Federal Register** on January 17, 2012 (77 FR 2318). The hearing was held in Washington, DC, on May 3, 2012, and all persons who requested the opportunity were permitted to appear in person or by counsel.

The Commission transmitted its determinations in these reviews to the Secretary of Commerce on June 28, 2012. The views of the Commission are contained in USITC Publication 4333 (June 2012), entitled *Certain Circular Welded Pipe and Tube from Brazil, India, Korea, Mexico, Taiwan, Thailand, and Turkey: Investigation Nos. 701–TA–253 and 731–TA–132, 252, 271, 273, 532–534 and 536 (Third Review).*

By order of the Commission.

[1] The record is defined in sec. 207.2(f) of the Commission's Rules of Practice and Procedure (19 CFR 207.2(f)).

Issued: June 29, 2012.

Lisa R. Barton,

Acting Secretary to the Commission.

[FR Doc. 2012–16444 Filed 7–3–12; 8:45 am]

BILLING CODE 7020–02–P

INTERNATIONAL TRADE COMMISSION

[Investigation No. 337–TA–811]

Certain Integrated Solar Power Systems and Components Thereof; Notice of Termination of the Investigation Based on Settlement

AGENCY: U.S. International Trade Commission.

ACTION: Notice.

SUMMARY: Notice is hereby given that the U.S. International Trade Commission has determined not to review an initial determination (''ID'') (Order No. 11) of the presiding administrative law judge (''ALJ'') terminating the investigation based on settlement agreements.

FOR FURTHER INFORMATION CONTACT: Michael Liberman, Esq., Office of the General Counsel, U.S. International Trade Commission, 500 E Street SW., Washington, DC 20436, telephone (202) 205–3106. Copies of non-confidential documents filed in connection with this investigation are or will be available for inspection during official business hours (8:45 a.m. to 5:15 p.m.) in the Office of the Secretary, U.S. International Trade Commission, 500 E Street SW., Washington, DC 20436, telephone (202) 205–2000. General information concerning the Commission may also be obtained by accessing its Internet server at *http://www.usitc.gov.* The public record for this investigation may be viewed on the Commission's electronic docket (EDIS) at *http://edis.usitc.gov.* Hearing-impaired persons are advised that information on this matter can be obtained by contacting the Commission's TDD terminal on (202) 205–1810.

SUPPLEMENTARY INFORMATION: The Commission instituted this investigation on November 8, 2011, based on a complaint filed by Westinghouse Solar, Inc. and Andalay Solar, Inc., both of Campbell, California, alleging a violation of section 337 in the importation, sale for importation, and sale within the United States after importation of certain integrated solar power systems and components thereof by reason of infringement of certain claims of U.S. Patent Nos. 7,406,800 and 7,987,641. 76 FR 69284 (Nov. 8, 2011). The respondents are Zep Solar, Inc. of

San Rafael, California; Canadian Solar Inc. of Kitchener, Ontario, Canada; and Canadian Solar (USA) Inc. of San Ramon, California. *Id.*

On May 25, 2012, all of the private parties filed a joint motion to terminate the investigation based on confidential settlement agreements under Commission rules 210.21(a)(2) and (b). The Commission investigative attorney supported the motion.

On June 13, 2012, the presiding ALJ issued an ID (Order No. 11) granting the joint motion. No party petitioned for review of the ID.

The authority for the Commission's determination is contained in section 337 of the Tariff Act of 1930, as amended, 19 U.S.C. 1337, and in section 210.42(h) of the Commission's Rules of Practice and Procedure, 19 CFR 210.42(h).

By order of the Commission.

Issued: June 29, 2012.

Lisa R. Barton,

Acting Secretary to the Commission.

[FR Doc. 2012–16433 Filed 7–3–12; 8:45 am]

BILLING CODE 7020–02–P

DEPARTMENT OF JUSTICE

Notice of Lodging of Proposed Consent Decree With Dairyland Power Cooperative Under the Clean Air Act

Pursuant to 28 CFR 50.7, notice is hereby given that on June 28, 2012, a proposed Consent Decree in *United States of America* v. *Dairyland Power Cooperative (''Dairyland''),* Civil Action No. 12-cv-462, was lodged with the United States District Court for the Western District of Wisconsin.

In this civil enforcement action under the federal Clean Air Act (''Act''), the United States alleges that Dairyland—an electric utility—failed to comply with certain requirements of the Act intended to protect air quality. The complaint alleges that Dairyland violated the Prevention of Significant Deterioration (''PSD'') and Title V provisions of the Act, 42 U.S.C. 7401–7671 *et seq.,* and related state and federal implementing regulations, at the Alma/J.P. Madgett Generating Station, a coal-fired power plant in Buffalo County, Wisconsin, and the Genoa Generating Station, a coal-fired power plant in Vernon County, Wisconsin. The alleged violations arise from the construction of modifications at the power plants and operation of the plants in violation of PSD and Title V requirements. The complaint alleges that Dairyland failed to obtain appropriate permits and failed to install and apply required pollution control devices to reduce emissions of various air pollutants. The complaint seeks both injunctive relief and civil penalties.

The proposed Decree lodged with the Court requires installation and operation of certain pollution control devices at the Alma/J.P. Madgett and Genoa plants, and the permanent cessation of operations of certain units at the Alma/J.P. Madgett plant. The settlement will reduce emissions of sulfur dioxide (''SO_2''), nitrogen oxides (''NO_X''), and particular matter (''PM'') through emission control requirements and limitations specified by the proposed Decree. Dairyland will also fund environmental projects at a cost of at least $5 million to mitigate the alleged adverse effects of its past violations, and will pay a civil penalty of $950,000.

The Department of Justice will receive for a period of thirty (30) days from the date of this publication comments relating to the Consent Decree. Comments should be addressed to the Assistant Attorney General, Environment and Natural Resources Division, and either emailed to *pubcomment-ees.enrd@usdoj.gov* or mailed to P.O. Box 7611, U.S. Department of Justice, Washington, DC 20044–7611, and should refer to *United States* v. *Dairyland Power Cooperative,* D.J. Ref. 90–5–2–1–10163.

During the public comment period, the Consent Decree may also be examined on the following Department of Justice Web site, *http://www.usdoj.gov/enrd/Consent_Decrees.html.* A copy of the Consent Decree may also be obtained by mail from the Consent Decree Library, P.O. Box 7611, U.S. Department of Justice, Washington, DC 20044–7611 or by faxing or emailing a request to ''Consent Decree Copy'' (*EESCDCopy.ENRD@usdoj.gov*), fax no. (202) 514–0097, phone confirmation number (202) 514–5271. If requesting a copy from the Consent Decree Library by mail, please enclose a check in the amount of $24.25 (25 cents per page reproduction cost) payable to the U.S. Treasury or, if requesting by email or fax, forward a check in that amount to the Consent Decree Library at the address given above.

Maureen Katz,

Assistant Chief, Environmental Enforcement Section, Environment and Natural Resources Division.

[FR Doc. 2012–16353 Filed 7–3–12; 8:45 am]

BILLING CODE 4410–15–P

DEPARTMENT OF JUSTICE

Drug Enforcement Administration

[Docket No. DEA–363]

Controlled Substances: Proposed Adjustment to the Aggregate Production Quotas for 2012

AGENCY: Drug Enforcement Administration (DEA), Department of Justice.

ACTION: Notice with request for comments.

SUMMARY: This notice proposes to adjust the 2012 aggregate production quotas for several controlled substances in schedules I and II of the Controlled Substances Act (CSA).

DATES: Electronic comments must be submitted and written comments must be postmarked on or before August 6, 2012. Commenters should be aware that the electronic Federal Docket Management System will not accept comments after midnight Eastern Time on the last day of the comment period.

ADDRESSES: To ensure proper handling of comments, please reference ''Docket No. DEA–363'' on all electronic and written correspondence. DEA encourages all comments be submitted electronically through *http://www.regulations.gov* using the electronic comment form provided on that site. An electronic copy of this document is also available at the *http://www.regulations.gov* Web site for easy reference. Paper comments that duplicate the electronic submission are not necessary as all comments submitted to *www.regulations.gov* will be posted for public review and are part of the official docket record. Should you, however, wish to submit written comments via regular or express mail, they should be sent to the Drug Enforcement Administration, Attention: DEA Federal Register Representative/ODL, 8701 Morrissette Drive, Springfield, VA 22152.

FOR FURTHER INFORMATION CONTACT: John W. Partridge, Chief, Liaison and Policy Section, Drug Enforcement Administration, 8701 Morrissette Drive, Springfield, VA 22152, Telephone: (202) 307–4654.

SUPPLEMENTARY INFORMATION:

Posting of Public Comments

Please note that all comments received are considered part of the public record and made available for public inspection online at *http://www.regulations.gov* and in the DEA's public docket. Such information includes personal identifying

information (such as your name, address, etc.) voluntarily submitted by the commenter.

If you want to submit personal identifying information (such as your name, address, etc.) as part of your comment, but do not want it to be posted online or made available in the public docket, you must include the phrase ''PERSONAL IDENTIFYING INFORMATION'' in the first paragraph of your comment. You must also place all the personal identifying information you do not want posted online or made available in the public docket in the first paragraph of your comment and identify what information you want redacted.

If you want to submit confidential business information as part of your comment, but do not want it to be posted online or made available in the public docket, you must include the phrase ''CONFIDENTIAL BUSINESS INFORMATION'' in the first paragraph of your comment. You must also prominently identify confidential business information to be redacted within the comment. If a comment has so much confidential business information that it cannot be effectively redacted, all or part of that comment may not be posted online or made available in the public docket.

Personal identifying information and confidential business information identified and located as set forth above will be redacted, and the comment, in redacted form, will be posted online and placed in the DEA's public docket file. Please note that the Freedom of Information Act applies to all comments received. If you wish to inspect the agency's public docket file in person by appointment, please see the **FOR FURTHER INFORMATION CONTACT** paragraph.

Background

Section 306 of the CSA (21 U.S.C. 826) requires that the Attorney General establish aggregate production quotas for each basic class of controlled substance listed in schedules I and II. This responsibility has been delegated to the Administrator of the DEA by 28 CFR 0.100. The Administrator, in turn, has redelegated this function to the Deputy Administrator, pursuant to 28 CFR 0.104. The 2012 established aggregate production quotas for controlled substances in schedules I and II were published in the **Federal Register** (76 FR 78044) on December 15, 2011. That notice stipulated that, as provided for in 21 CFR 1303.13, all aggregate production quotas are subject to adjustment.

Analysis for Proposed Revised 2012 Aggregate Production Quotas

DEA now proposes to adjust the established 2012 aggregate production quotas for some schedule I and II controlled substances. In proposing the adjustment, DEA has taken into account the criteria that DEA is required to consider in accordance with 21 CFR 1303.13. DEA proposes the adjustment of the aggregate production quotas for basic classes of schedule I and II controlled substances by considering (1) Changes in demand for the class, changes in the national rate of net disposal for the class, and changes in the rate of net disposal by the registrants holding individual manufacturing quotas for the class; (2) whether any increased demand or changes in the national and/or individual rates of net disposal are temporary, short term, or long term; (3) whether any increased demand can be met through existing inventories, increased individual manufacturing quotas, or increased importation without increasing the aggregate production quota; (4) whether any decreased demand will result in excessive inventory accumulation by all persons registered to handle the class; and (5) other factors affecting the medical, scientific, research, and industrial needs of the United States and lawful export requirements, as the Administrator finds relevant.

In determining whether to propose adjustments to the 2012 aggregate production quotas, DEA considered updated information obtained from 2011 year-end inventories, 2011 disposition data submitted by quota applicants, estimates of the medical needs of the United States, product development, and other information made available to DEA after the initial aggregate production quotas had been established. The Deputy Administrator, therefore, proposes to adjust the 2012 aggregate production quotas for some schedule I and II controlled substances, expressed in grams of anhydrous acid or base, as follows:

Basic class	Previously established 2012 quotas	Proposed adjusted 2012 quotas
Schedule I		
1-[1-(2-Thienyl)cyclohexyl]piperidine	0 g	5 g.
1-[2-(4-Morpholinyl)ethyl]-3-(1-naphthoyl)indole (JWH-200)	45 g	No Change.
1-Butyl-3-(1-naphthoyl)indole (JWH-073)	45 g	No Change.
1-Methyl-4-phenyl-4-propionoxypiperidine	2 g	No Change.
1-Pentyl-3-(1-naphthoyl)indole (JWH-018)	45 g	No Change.
2,5-Dimethoxyamphetamine	2 g	12 g.
2,5-Dimethoxy-4-ethylamphetamine (DOET)	2 g	12 g.
2,5-Dimethoxy-4-n-propylthiophenethylamine	2 g	12 g.
3-Methylfentanyl	2 g	No Change.
3-Methylthiofentanyl	2 g	No Change.
3,4-Methylenedioxyamphetamine (MDA)	22 g	30 g.
3,4-Methylenedioxy-N-methylcathinone (methylone)	8 g	12 g.
3,4-Methylenedioxy-N-ethylamphetamine (MDEA)	15 g	24 g.
3,4-Methylenedioxymethamphetamine (MDMA)	22 g	30 g.
3,4-Methylenedioxypyrovalerone (MDPV)	8 g	12 g.
3,4,5-Trimethoxyamphetamine	2 g	12 g.
4-Bromo-2,5-dimethoxyamphetamine (DOB)	2 g	12 g.
4-Bromo-2,5-dimethoxyphenethylamine (2-CB)	2 g	12 g.
4-Methoxyamphetamine	77 g	88 g.
4-Methylaminorex	2 g	12 g.
4-Methyl-2,5-dimethoxyamphetamine (DOM)	2 g	12 g.
4-Methyl-N-methylcathinone (mephedrone)	8 g	12 g.
5-(1,1-Dimethylheptyl)-2-[(1R,3S)-3-hydroxycyclohexyl]-phenol	68 g	No Change.
5-(1,1-Dimethyloctyl)-2-[(1R,3S)-3-hydroxycyclohexyl]-phenol	53 g	No Change.

Basic class	Previously established 2012 quotas	Proposed adjusted 2012 quotas
5-Methoxy-3,4-methylenedioxyamphetamine	2 g	12 g.
5-Methoxy-N,N-diisopropyltryptamine	2 g	12 g.
Acetyl-alpha-methylfentanyl	2 g	No Change.
Acetyldihydrocodeine	2 g	No Change.
Acetylmethadol	2 g	No Change.
Allylprodine	2 g	No Change.
Alphacetylmethadol	2 g	No Change.
Alpha-ethyltryptamine	2 g	12 g.
Alphameprodine	2 g	No Change.
Alphamethadol	2 g	No Change.
Alpha-methylfentanyl	2 g	No Change.
Alpha-methylthiofentanyl	2 g	No Change.
Alpha-methyltryptamine (AMT)	2 g	12 g.
Aminorex	2 g	12 g.
Benzylmorphine	2 g	No Change.
Betacetylmethadol	2 g	No Change.
Beta-hydroxy-3-methylfentanyl	2 g	No Change.
Beta-hydroxyfentanyl	2 g	No Change.
Betameprodine	2 g	No Change.
Betamethadol	2 g	No Change.
Betaprodine	2 g	No Change.
Bufotenine	3 g	No Change.
Cathinone	4 g	12 g.
Codeine-N-oxide	602 g	No Change.
Diethyltryptamine	2 g	12 g.
Difenoxin	50 g	No Change.
Dihydromorphine	3,608,000 g	No Change.
Dimethyltryptamine	7 g	18 g.
Gamma-hydroxybutyric acid	47,000,000 g	No Change.
Heroin	20 g	No Change.
Hydromorphinol	54 g	No Change.
Hydroxypethidine	2 g	No Change.
Ibogaine	5 g	No Change.
Lysergic acid diethylamide (LSD)	16 g	No Change.
Marihuana	21,000 g	No Change.
Mescaline	5 g	13 g.
Methaqualone	10 g	No Change.
Methcathinone	4 g	12 g.
Methyldihydromorphine	2 g	No Change.
Morphine-N-oxide	655 g	No Change.
N-Benzylpiperazine	2 g	12 g.
N,N-Dimethylamphetamine	2 g	12 g.
N-Ethylamphetamine	2 g	12 g.
N-Hydroxy-3,4-methylenedioxyamphetamine	2 g	12 g.
Noracymethadol	2 g	No Change.
Norlevorphanol	52 g	No Change.
Normethadone	2 g	No Change.
Normorphine	18 g	No Change.
Para-fluorofentanyl	2 g	No Change.
Phenomorphan	2 g	No Change.
Pholcodine	2 g	No Change.
Properidine	2 g	No Change.
Psilocybin	2 g	No Change.
Psilocyn	2 g	No Change.
Tetrahydrocannabinols	393,000 g	No Change.
Thiofentanyl	2 g	No Change.
Tilidine	10 g	No Change.
Trimeperidine	2 g	No Change.
Schedule II		
1-Phenylcyclohexylamine	2 g	No Change.
1-Piperdinocyclohexanecarbonitrile	2 g	27 g.
4-Anilino-N-phenethyl-4-piperidine (ANPP)	1,800,000 g	No Change.
Alfentanil	15,000 g	19,550 g.
Alphaprodine	2 g	No Change.
Amobarbital	40,007 g	No Change.
Amphetamine (for conversion)	8,500,000 g.	
Amphetamine (for sale) *	25,300,000 g	33,400,000 g.

Basic class	Previously established 2012 quotas	Proposed adjusted 2012 quotas
* DEA has determined that the revised total quantity to provide for the estimated medical, scientific, research, and industrial needs of the United States, lawful export requirements, and the establishment and maintenance of reserve stock is 29,400,000 g. DEA has further determined that an additional 4,000,000 g is necessary to provide for future research and development needs and unexpected emergencies that could affect market availability.		
Carfentanil	0 g	5 g.
Cocaine	216,000 g	No Change.
Codeine (for conversion)	65,000,000 g	No Change.
Codeine (for sale)	39,605,000 g	No Change.
Dextropropoxyphene	7 g	No Change.
Dihydrocodeine	400,000 g	No Change.
Diphenoxylate	900,000 g	No Change.
Ecgonine	83,000 g	No Change.
Ethylmorphine	2 g	No Change.
Fentanyl	1,428,000 g	No Change.
Glutethimide	2 g	No Change.
Hydrocodone (for sale)	59,000,000 g	63,000,000 g.
Hydromorphone	3,455,000 g	3,628,000 g.
Isomethadone	4 g	No Change.
Levo-alphacetylmethadol (LAAM)	3 g	No Change.
Levomethorphan	5 g	No Change.
Levorphanol	3,600 g	No Change.
Lisdexamfetamine	12,000,000 g	No Change.
Meperidine	5,500,000 g	No Change.
Meperidine Intermediate-A	5 g	No Change.
Meperidine Intermediate-B	9 g	No Change.
Meperidine Intermediate-C	5 g	No Change.
Metazocine	5 g	No Change.
Methadone (for sale)	20,000,000 g	No Change.
Methadone Intermediate	26,000,000 g	No Change.
Methamphetamine	3,130,000 g	No Change.
[750,000 grams of levo-desoxyephedrine for use in a non-controlled, non-prescription product; 2,331,000 grams for methamphetamine mostly for conversion to a schedule III product; and 49,000 grams for methamphetamine (for sale)]		
Methylphenidate	56,000,000 g	No Change.
Morphine (for conversion)	83,000,000 g	No Change.
Morphine (for sale)	39,000,000 g	No Change.
Nabilone	20,502 g	No Change.
Noroxymorphone (for conversion)	7,200,000 g	No Change.
Noroxymorphone (for sale)	401,000 g	1,981,000 g.
Opium (powder)	63,000 g	73,000 g.
Opium (tincture)	1,000,000 g	No Change.
Oripavine	9,800,000 g	15,300,000 g.
Oxycodone (for conversion)	5,600,000 g	No Change.
Oxycodone (for sale)	98,000,000 g	98,700,000 g.
Oxymorphone (for conversion)	12,800,000 g	No Change.
Oxymorphone (for sale)	5,500,000 g	No Change.
Pentobarbital	34,000,000 g	No Change.
Phenazocine	5 g	No Change.
Phencyclidine	24 g	No Change.
Phenmetrazine	2 g	No Change.
Phenylacetone	16,000,000 g	No Change.
Racemethorphan	2 g	No Change.
Remifentanil	2,500 g	No Change.
Secobarbital	336,002 g	No Change.
Sufentanil	5,000 g	No Change.
Tapentadol	5,400,000 g	No Change.
Thebaine	116,000,000 g	No Change.

Aggregate production quotas for all other schedule I and II controlled substances included in 21 CFR 1308.11 and 1308.12 remain at zero. Pursuant to 21 CFR part 1303, the Deputy Administrator may adjust the 2012 aggregate production quotas and individual manufacturing quotas allocated for the year.

Comments

Pursuant to 21 CFR 1303.11 and 1303.13, any interested person may submit written comments on or objections to these proposed determinations. Based on comments received in response to this Notice, the Deputy Administrator may hold a public hearing on one or more issues raised. In the event the Deputy Administrator decides in his sole discretion to hold such a hearing, the Deputy Administrator will publish a notice of any such hearing in the **Federal Register**. After consideration of any comments and after a hearing, if one is held, the Deputy Administrator will publish in the **Federal Register** a Final

Order determining any adjustment of the aggregate production quota.

Dated: June 28, 2012.

Michele M. Leonhart,

Administrator.

[FR Doc. 2012–16396 Filed 7–3–12; 8:45 am]

BILLING CODE 4410–09–P

DEPARTMENT OF JUSTICE

Drug Enforcement Administration

Importer of Controlled Substances; Notice of Application; Myoderm

Pursuant to Title 21 Code of Federal Regulations 1301.34(a), this is notice that on May 9, 2012, Myoderm, 48 East Main Street, Norristown, Pennsylvania 19401, made application to the Drug Enforcement Administration (DEA) for registration as an importer of the following basic classes of controlled substances:

Drug	Schedule
Amphetamine (1100)	II
Lisdexamfetamine (1205)	II
Methylphenidate (1724)	II
Pentobarbital (2270)	II
Nabilone (7379)	II
Codeine (9050)	II
Oxycodone (9143)	II
Hydromorphone (9150)	II
Hydrocodone (9193)	II
Levomethorphan (9210)	II
Meperidine (9230)	II
Methadone (9250)	II
Methadone intermediate (9254)	II
Morphine (9300)	II
Oxymorphone (9652)	II
Fentanyl (9801)	II

The company plans to import the listed controlled substances in finished dosage form for clinical trials, and research.

The import of the above listed basic classes of controlled substances would be granted only for analytical testing and clinical trials. This authorization does not extend to the import of a finished FDA approved or non-approved dosage form for commercial distribution in the United States.

Any bulk manufacturer who is presently, or is applying to be, registered with DEA to manufacture such basic classes of controlled substances listed in schedule I or II, which fall under the authority of section 1002(a)(2)(B) of the Act 21 U.S.C. 952(a)(2)(B) may, in the circumstances set forth in 21 U.S.C. 958(i), file comments or objections to the issuance of the proposed registration and may, at the same time, file a written request for a hearing on such application pursuant to 21 CFR 1301.43, and in such form as prescribed by 21 CFR 1316.47.

Any such written comments or objections should be addressed, in quintuplicate, to the Drug Enforcement Administration, Office of Diversion Control, Federal Register Representative (ODL), 8701 Morrissette Drive, Springfield, Virginia 22152; and must be filed no later than August 6, 2012.

This procedure is to be conducted simultaneously with, and independent of, the procedures described in 21 CFR 1301.34(b), (c), (d), (e), and (f). As noted in a previous notice published in the **Federal Register** on September 23, 1975, 40 FR 43745–46, all applicants for registration to import a basic class of any controlled substance in schedules I or II are, and will continue to be, required to demonstrate to the Deputy Assistant Administrator, Office of Diversion Control, Drug Enforcement Administration, that the requirements for such registration pursuant to 21 U.S.C. 958(a); 21 U.S.C. 823(a); and 21 CFR 1301.34(b), (c), (d), (e), and (f) are satisfied.

Dated: June 28, 2012.

Joseph T. Rannazzisi,

Deputy Assistant Administrator, Office of Diversion Control, Drug Enforcement Administration.

[FR Doc. 2012–16493 Filed 7–3–12; 8:45 am]

BILLING CODE 4410–09–P

DEPARTMENT OF JUSTICE

National Institute of Corrections

Solicitation for a Cooperative Agreement—Curricula Review and Revision: NIC Trainer Development Series

AGENCY: National Institute of Corrections, U.S. Department of Justice.

ACTION: Solicitation for a Cooperative Agreement.

SUMMARY: The National Institute of Corrections' (NIC) Academy Division is soliciting proposals from organizations, groups, or individuals to enter into a cooperative agreement for the review, revision, and/or development of competency-based, blended modality training curricula with the aim of providing corrections agencies and professionals with the knowledge, skills, and abilities needed to train and develop their staff.

DATES: Application must be received by 4 p.m. (EDT) on Friday, July 20, 2012.

ADDRESSES: Mailed applications must be sent to: Director, National Institute of Corrections, 320 First Street NW., Room 5002, Washington, DC 20534. Applicants are encouraged to use Federal Express, UPS, or similar service to ensure delivery by the due date.

Hand delivered applications should be brought to 500 First Street NW., Washington, DC 20534. At the front desk, dial 7–3106, extension 0 for pickup.

Faxed applications will not be accepted. Electronic applications can be submitted via *http://www.grants.gov.*

FOR FURTHER INFORMATION CONTACT: All technical or programmatic questions concerning this announcement should be directed to Michael Guevara, Correctional Program Specialist, National Institute of Corrections. Mr. Guevara can be reached by calling 800–995–6429, ext. 6617, or by email at *mguevar@bop.gov.* In addition to the direct reply, all questions and responses will be posted on NIC's Web site at *www.nicic.gov* for public review (the names of those submitting questions will not be posted). The Web site will be updated regularly and postings will remain on the Web site until the closing date of this cooperative agreement solicitation. Only questions received by 12 p.m. (EDT) on July 13, 2012 will be posted on the NIC Web site.

SUPPLEMENTARY INFORMATION:

Overview: NIC is revitalizing its trainer development series with the goal of helping corrections agencies and trainers improve staff training and development. NIC is interested in updating some of its curricula, including ''Training Design and Development,'' ''Foundation Skills for Trainers,'' ''Building Agency Success: Developing an Effective FTO/OJT Training Program,'' and ''Training for Training Directors.'' NIC is also interested in the development of a model Training for Trainers template that could be applied broadly, enabling agencies to train trainers in existing curricula.

All curricula will follow the Instructional Theory into Practice (ITIP) model and will incorporate blended learning strategies. A copy of the ''ITIP Toolkit,'' which may be useful in helping awardees develop acceptable curricula, is available on the NIC Web site at *http://nicic.gov/Library/024773.* An essential component of this project will be the incorporation of current research on adult learning and performance. The use of multiple delivery technologies is required.

Background: NIC has prioritized capacity building in corrections agencies for decades. While NIC frequently relied on traditional classroom-based training in the past, the emergence of new technologies and the

ever-growing body of research on adult learning and performance has caused NIC's approach to shift to blended delivery. Blended learning environments can increase the efficiency of professional development, and research supports that these methods are equally as effective as more traditional deliveries.

Three important factors have caused NIC to reexamine its trainer development series. The first factor is the effect of ongoing budget constraints on agencies and departments throughout the country. Staff development divisions have been hit particularly hard by budget cuts, and administrators are faced with the difficult task of finding personnel qualified to train their staff. Second, a wide variety of technologies have emerged in the last decade (and new ones debut at an astounding rate) that can enhance learning experiences and make training both more effective and more efficient. Third, research on adult learning and performance continues to grow, mandating that lesson plans be examined to ensure that the instructional design itself (as well as the subject matter) is evidence-based.

Purpose: To comparatively review current resources, analyze gaps, and, based on that analysis, revise or create a new NIC learning and performance series of curricula.

Scope of Work: By the end of this cooperative agreement, the awardee will complete four interrelated tasks: (1) Conduct an exhaustive review of available resources related to learning and performance. This review should include resources external to NIC as well as those generated by NIC. (2) Conduct a gap analysis and make recommendations on how to revise existing curricula or create new curricula to meet the learning and performance needs of the corrections field. While recommendations for other curricula revisions will be considered, NIC is particularly interested in the revitalization of the following: ''Training Design and Development'' (*http://nicic.gov/Library/019271*); ''Foundation Skills for Trainers'' (*http://nicic.gov/Library/019541*); ''Building Agency Success: Developing an Effective FTO/OJT Training Program'' (*http://nicic.gov/Library/019856*); and ''Training for Training Directors'' (*http://nicic.gov/Library/022679*). (3) Upon completion of the resource review and analysis, and after consultation with the NIC project manager, the awardee will revise or develop the agreed-upon curricula. The four curricula mentioned in the previous paragraph will be revised as part of this cooperative agreement. The resource review and gap analysis will inform how they will be revised and how the awardee will best incorporate blended learning strategies. All new or revised curricula will be developed following the Instructional Theory into Practice (ITIP) model. Each curriculum will include facilitator manuals, participant materials, and all relevant supplemental material such as presentation slides, visual and/or audio aids, videos, virtual instructor-led training lesson plans, handouts, and exercises. Clear learning objectives must be contained in each lesson, and delivery modality should be based on how to most efficiently and effectively achieve these objectives. (4) Finally, the awardee will develop a model Training for Trainers template that can be applied broadly and enable agencies to train trainers in existing curricula.

Specific Requirements: The incorporation of blended learning strategies is mandatory. An example of a blended curriculum may include: (A) Taking one or more asynchronous e-courses on such topics as the fundamentals of training (e.g., ''Instructional Theory into Practice (ITIP): No Fail Lesson Plan Construction,'' or ''How to Develop Effective Performance Objectives,'' both available through NIC's Learn Center: *http://nic.learn.com/*); (B) One or more virtual instructor-led trainings on, for example, distance learning or the effective use of social media in a learning environment. This medium is also ideal for orientation, expectations, and other basics; (C) Reading assignments on current research; (D) Discussion forums, blogs, and/or social media threads to create a community of practice; (E) Classroom-based training for modeling and guided practice of interpersonal skills; (F) Independent practice at home agencies; and (G) Follow-up VILTs focusing on implementation and action planning.

Among other factors, the cooperative agreement will be awarded with consideration for a proposal that demonstrates an organization, group, or individual with knowledge, experience, and expertise in the following: Curriculum design and development; Adult learning theory; Current research in the areas of learning and performance; Applying the ITIP (or comparable) model; Designing and delivering effective blended learning curricula; Training for trainers design and delivery; Managing projects and delivering products on time and within budget.

Requirement for Example of Blended Curriculum Work: All applicants must supply one example of a blended curriculum designed, developed, and delivered by the applicant. If different team members have experience with different aspects of design and delivery, elements of each from separate curricula are acceptable.

Document Requirements: Documents or other media produced under this award must follow these guidelines: Prior to the preparation of the final draft of any document or other media, the awardee must consult with NIC's writer/editor concerning the acceptable formats for manuscript submissions and the technical specifications for electronic media. The awardee must follow the guidelines listed herein, as well as follow (1) the Guidelines for Preparing and Submitting Manuscripts for Publication as found in the ''General Guidelines for Cooperative Agreements,'' which can be found on the NIC Web site at *www.nicic.gov/cooperativeagreements* and (2) NIC recommendations for producing media using plain language, which can be found at *www.nicic.gov/plainlanguage.*

All final documents and other media submitted under this project may be posted on the NIC Web site and must meet the federal government's requirement for accessibility (e.g., 508 PDFs or HTML files). The awardee must provide descriptive text interpreting all graphics, photos, graphs, and/or multimedia that will be included with or distributed alongside the materials and must provide transcripts for all applicable audio/visual works.

Application Requirements: Applications should be concisely written, typed double spaced and reference the project by the ''NIC Opportunity Number'' and Title in this announcement. The package must include: A cover letter that identifies the audit agency responsible for the applicant's financial accounts as well as the audit period or fiscal year that the applicant operates under (e.g., July 1 through June 30); a program narrative in response to the statement of work and a budget narrative explaining projected costs. The following forms must also be included: OMB Standard Form 424, Application for Federal Assistance; OMB Standard Form 424A, Budget information—Non-Construction Programs; OMB Standard Form 424B, Assurances—Non-Construction Programs (these forms are available at *http://www.grants.gov*) and DOJ/NIC Certification Regarding Lobbying; Debarment, Suspension and Other Responsibility Matters; and the Drug-Free Workplace Requirements (available

at *http://www.nicic.gov/Downloads/General/certif-frm.pdf.*).

Applications may be submitted in hard copy, or electronically via *http://www.grants.gov.* If submitted in hard copy, there needs to be an original and three copies of the full proposal (program and budget narratives, application forms and assurances). The original should have the applicant's signature in blue ink.

Authority: Public Law 93–415.

Funds Available: NIC is seeking the applicant's best ideas regarding accomplishment of the scope of work and the related costs for achieving the goals of this solicitation. Funding is set at $100,000. Funds may be used only for the activities that are linked to the desired outcome of the project.

Eligibility of Applicants: An eligible applicant is any public or private agency, educational institution, organization, individual, or team with expertise in the described areas.

Review Considerations: Applications received under this announcement will be subjected to the NIC review process. The criteria for the evaluation of each application will be as follows:

Programmatic (50%)

Is there demonstrated knowledge of adult learning theory? Is there a demonstrated knowledge of the ITIP model of curriculum development? Does the applicant demonstrate knowledge, skill, and experience in designing and developing curricula? Does the applicant demonstrate knowledge, skill, and experience in designing and developing training for trainers? Is there demonstrated knowledge of how to effectively use blended learning techniques? Does the proposal clearly lay out a plan for incorporating blended learning strategies? Are there any innovative approaches, techniques, or design aspects proposed that will enhance the project?

Organizational (20%)

Do the skills, knowledge, and expertise of the organization and the proposed project staff demonstrate a high level of competency to complete the tasks? Does the applicant/organization have the necessary experience and organizational capacity to meet all goals of the project? Are the proposed project management and staffing plans realistic and sufficient to complete the project within the specified time frame?

Project Management/Administration (15%)

Does the applicant identify specific and reasonable objectives, milestones, and measures to track progress? Are major tasks and strategies that will be used to achieve objectives and milestones clearly identified? Is a clear and reasonable structure for the allocation of all personnel, consultants, and resources laid out?

Financial/Administrative (15%)

Is there adequate cost narrative to support the proposed budget? Does the budget seem realistic, and does the cost seem reasonable? Does the proposal seem to provide good value relative to the anticipated results?

Note: NIC will NOT award a cooperative agreement to an applicant who does not have a Dun and Bradstreet Database Universal Number (DUNS) and is not registered in the Central Contractor Registry (CCR).

A DUNS number can be received at no cost by calling the dedicated toll-free DUNS number request line at 1–800–333–0505 (if you are a sole proprietor, dial 1–866–705–5711 and select option 1).

Registration in the CCR can be done online at the CCR Web site: *http://www.ccr.gov.* A CCR Handbook and worksheet can also be reviewed at the Web site.

Number of Awards: One.

NIC Opportunity Number: 12AC15. This number should appear as a reference line in the cover letter, where indicated on Standard Form 424, and outside of the envelope in which the application is sent.

Catalog of Federal Domestic Assistance Number: 16.601.

Executive Order 12372: This project is not subject to the provisions of Executive Order 12372.

Morris L. Thigpen,

Director, National Institute of Corrections.

[FR Doc. 2012–16334 Filed 7–3–12; 8:45 am]

BILLING CODE 4410–36–P

DEPARTMENT OF LABOR

Occupational Safety and Health Administration

[Docket No. OSHA–2012–0022]

Federal Advisory Council on Occupational Safety and Health (FACOSH)

AGENCY: Occupational Safety and Health Administration (OSHA), Labor.

ACTION: Request for nominations to serve on the Federal Advisory Council on Occupational Safety and Health (FACOSH).

SUMMARY: The Assistant Secretary of Labor for Occupational Safety and Health invites interested individuals to submit nominations for membership on FACOSH.

DATES: Nominations for FACOSH must be submitted (postmarked, sent, transmitted, or received) by September 4, 2012.

ADDRESSES: You may submit nominations and supporting materials, which you must identify by the Docket Number for this **Federal Register** notice (Docket No. OSHA–2012–0022), by one of the following methods:

Electronically: You may submit nominations, including attachments, electronically at *http://www.regulations.gov,* the federal e-Rulemaking portal. Follow the online instructions for submitting nominations;

Facsimile: If your nomination and supporting materials and attachments, do not exceed 10 pages, you may Fax them to the OSHA Docket Office at (202) 693–1648;

Mail, express delivery, hand delivery, messenger or courier service: You may send nominations and supporting materials to the OSHA Docket Office, Docket No. OSHA–2012–0022, Room N–2625, U.S. Department of Labor, 200 Constitution Avenue NW., Washington, DC 20210; telephone (202) 693–2350 (TTY number (877) 889–5627). Deliveries by hand, express mail, messenger, and courier service are accepted during the Department of Labor's and OSHA Docket Office's normal business hours, 8:15 a.m.–4:45 p.m., e.t.

For Additional Information

For press inquiries: Mr. Francis Meilinger, OSHA, Office of Communications, Room N–3647, U.S. Department of Labor, 200 Constitution Avenue NW., Washington, DC 20210; telephone (202) 693–1999; email: *meilinger.francis2@dol.gov.*

For general information: Mr. Francis Yebesi, OSHA, Office of Federal Agency Programs, Directorate of Enforcement Programs, Room N–3622, U.S. Department of Labor, 200 Constitution Avenue NW., Washington, DC 20210; telephone (202) 693–2122; email: *ofap@dol.gov.*

SUPPLEMENTARY INFORMATION: The Assistant Secretary of OSHA invites interested individuals to submit nominations for membership on FACOSH.

Background. FACOSH is authorized to advise the Secretary of Labor

(Secretary) on all matters relating to the occupational safety and health of federal employees (Occupational Safety and Health Act of 1970 (29 U.S.C. 668), 5 U.S.C. 7902, Executive Orders 12196 and 13511). This includes providing advice on how to reduce and keep to a minimum the number of injuries and illnesses in the federal workforce and how to encourage the establishment and maintenance of effective occupational safety and health programs in each federal agency.

FACOSH membership. FACOSH is comprised of 16 members, who the Secretary appoints to staggered terms not to exceed 3 years. OSHA is seeking nominations to fill six positions on FACOSH that will become vacant on January 1, 2013.

The categories of FACOSH membership and the number of new members to be appointed to three-year terms include:

- Eight members are federal agency management representatives—Three management representatives will be appointed.
- Eight members are representatives of labor organizations that represent federal employees—Three federal employee representatives will be appointed.

FACOSH members serve at the pleasure of the Secretary unless the member is no longer qualified to serve, resigns, or is removed by the Secretary. The Secretary may appoint FACOSH members to successive terms. FACOSH meets at least two times a year.

The Department of Labor is committed to equal opportunity in the workplace and seeks broad-based and diverse FACOSH membership. Any interested federal agency, labor organization, or person(s) may nominate one or more qualified persons for membership on FACOSH. Interested individuals also are invited and encouraged to submit statements in support of particular nominees.

Nomination requirements. Submission of nominations must include the following information:

1. The nominee's name, contact information and current occupation or position;
2. The nominee's resume or curriculum vitae, including prior membership on FACOSH and other relevant organizations, associations and committees;
3. Category of membership (management, labor) the nominee is qualified to represent;
4. A summary of the nominee's background, experience and qualifications that address the nominee's suitability for FACOSH membership;
5. Articles or other documents the nominee has authored that indicate the nominee's knowledge, experience, and expertise in occupational safety and health, particularly as it pertains to the federal workforce; and
6. A statement that the nominee is aware of the nomination, is willing to regularly attend and participate in FACOSH meetings, and has no apparent conflicts of interest that would preclude membership on FACOSH.

Member selection. The Secretary will appoint FACOSH members based upon criteria that include the nominee's level of responsibility for occupational safety and health matters involving the federal workforce; experience and competence in occupational safety and health; and willingness and ability to regularly and fully participate in FACOSH meetings. Federal agency management nominees who serve as their agency's Designated Agency Safety and Health Official (DASHO) or at an equivalent level of responsibility within their respective federal agencies are preferred as management members. Labor nominees who are responsible for federal employee occupational safety and health matters within their respective labor organizations are preferred as labor members.

The information received through the nomination process, along with other relevant sources of information, will assist the Secretary in making appointments to FACOSH. In selecting FACOSH members, the Secretary will consider individuals nominated in response to this **Federal Register** notice, as well as other qualified individuals. Once appointed, OSHA will publish a list of the new FACOSH members in the **Federal Register**.

Public Participation

Instructions for submitting nominations. Interested individuals may submit nominations and supplemental materials using one of the methods listed in the **ADDRESSES** section. All nominations, attachments and other materials must identify the Agency/labor organization name, and the OSHA docket number for this **Federal Register** notice, (Docket No. OSHA–2012–0022). You may supplement electronic nominations by uploading document files electronically. If, instead, you wish to mail additional materials in reference to an electronic or FAX submission, you must submit them to the OSHA Docket Office, (see **ADDRESSES** section). The additional material must clearly identify your electronic nomination by Agency/labor organization name, and docket number (Docket No. OSHA–2012–0022) so that the materials can be attached to the electronic submission.

Because of security-related procedures, the use of regular mail may cause a significant delay in the receipt of nominations. For information about security procedures concerning the delivery of materials by hand, express delivery, messenger or courier service, please contact the OSHA Docket Office (see **ADDRESSES** section).

All submissions in response to this **Federal Register** notice are posted without change at *http://www.regulations.gov.* Therefore, OSHA cautions interested parties about submitting personal information, such as Social Security numbers and birth dates. Guidance on submitting nominations and materials in response to this **Federal Register** notice is available at *http://www.regulations.gov* and from the OSHA Docket Office.

Access to docket and other materials. To read or download nominations and additional materials submitted in response to this **Federal Register** notice, go to Docket No. OSHA–2012–0022 at *http://www.regulations.gov.* All submissions are listed in the *http://www.regulations.gov* index. However, some documents (*e.g.,* copyrighted material) are not publicly available to read or download through that Web page. All submissions, including copyrighted material, are available for inspection and copying at the OSHA Docket Office. Contact the OSHA Docket Office for information about materials not available through *http://www.regulations.gov* and for assistance in using the Internet to locate submissions.

Electronic copies of this **Federal Register** notice are available at *http://www.regulations.gov.* This document, as well as news releases and other relevant information, also is available at OSHA's Web page at *http://www.osha.gov.*

Authority and Signature

David Michaels, Ph.D., MPH, Assistant Secretary of Labor for Occupational Safety and Health, directed the preparation of this notice under the authority granted by section 19 of the Occupational Safety and Health Act of 1970 (29 U.S.C. 668), 5 U.S.C. 7902, the Federal Advisory Committee Act (5 U.S.C. App, 2), Executive Order 12196 and 13511, Secretary of Labor's Order 1–2012 (77 FR 3912, 1/25/2012), 29 CFR part 1960 (Basic Program Elements of for Federal Employee Occupational Safety and Health Programs), and 41 CFR part 102–3.

Signed at Washington, DC, on June 28, 2012.

David Michaels,

Assistant Secretary of Labor for Occupational Safety and Health.

[FR Doc. 2012–16468 Filed 7–3–12; 8:45 am]

BILLING CODE 4510–26–P

NATIONAL TRANSPORTATION SAFETY BOARD

General Aviation Search and Rescue

The National Transportation Safety Board (NTSB) will convene a 2-day forum focused on general aviation search and rescue operations on July 17 and 18, 2012. In the United States, following the crash of a general aviation airplane, inland searches for the aircraft are conducted by the Air Force Rescue Coordination Center, who are supported by numerous Federal, state, local, and volunteer organizations.

The forum will concentrate on examining the regulations, policies, and procedures at a Federal level and serve as a platform to facilitate dialog between search organizations, technology manufacturers, and industry groups on the issues currently impacting the general aviation community. Additionally, the forum will spend a second day discussing emerging technologies and how they may shape the future of general aviation search and rescue.

The two-day forum is being chaired by NTSB Chairman Deborah A. P. Hersman and all five Board Members will participate. Panelists participating in the forum will represent government and industry.

Search and rescue can often mean the difference between life and death,'' said Chairman Hersman. ''Unfortunately, every year we see delays in the detection and location of crashed aircraft due to outdated equipment and a failure to coordinate information and assets.''

The NTSB has issued more than two dozen safety recommendations on search and rescue, conducted safety studies addressing ways to improve search and rescue operations and even included general aviation safety on the *Most Wanted List* of transportation improvements. A detailed agenda and list of participants will be released closer to the date of the event.

The forum will be held in the NTSB Board Room and Conference Center, located at 429 L'Enfant Plaza SW., Washington DC. The forum is open to the public and free of charge. In addition, the forum can be viewed via Web cast at *www.ntsb.gov.* NTSB Media Contact: Terry Williams, (202) 314–6100, *terry.williams@ntsb.gov.* NTSB Forum Manager: Jason Fedok, 202–314–6645, *jason.fedok@ntsb.gov.*

Candi R. Bing,

Federal Register Liaison Officer.

[FR Doc. 2012–16410 Filed 7–3–12; 8:45 am]

BILLING CODE 7533–01–P

NUCLEAR REGULATORY COMMISSION

[NRC–2012–0159]

Fuel Oil Systems for Emergency Power Supplies

AGENCY: Nuclear Regulatory Commission.

ACTION: Draft regulatory guide; request for comment.

SUMMARY: The U.S. Nuclear Regulatory Commission (NRC or the Commission) is issuing for public comment draft regulatory guide (DG), DG–1282, ''Fuel Oil Systems for Emergency Power Supplies.'' This guide describes a method that the NRC staff considers acceptable for use in complying with the Commission's requirements regarding fuel oil systems for safety-related emergency diesel generators and oil-fueled gas turbine generators, including assurance of adequate fuel oil quality.

DATES: Submit comments by August 31, 2012. Comments received after this date will be considered if it is practical to do so, but the NRC staff is able to ensure consideration only for comments received on or before this date. Although a time limit is given, comments and suggestions in connection with items for inclusion in guides currently being developed or improvements in all published guides are encouraged at any time.

ADDRESSES: You may access information and comment submissions related to this document, which the NRC possesses and is publically available, by searching on *http://www.regulations.gov* under Docket ID NRC–2012–0159. You may submit comments by any of the following methods:

- *Federal Rulemaking Web site:* Go to *http://www.regulations.gov* and search for Docket ID NRC–2012–0159. Address questions about NRC dockets to Carol Gallagher; telephone: 301–492–3668; email: *Carol.Gallagher@nrc.gov.*
- *Mail comments to:* Cindy Bladey, Chief, Rules, Announcements, and Directives Branch (RADB), Office of Administration, Mail Stop: TWB–05–B01M, U.S. Nuclear Regulatory Commission, Washington, DC 20555–0001.
- *Fax comments to:* RADB at 301–492–3446.

For additional direction on accessing information and submitting comments, see ''Accessing Information and Submitting Comments'' in the **SUPPLEMENTARY INFORMATION** section of this document.

FOR FURTHER INFORMATION CONTACT: Bob Radlinski, Office of New Reactors, U.S. Nuclear Regulatory Commission, Washington, DC 20555–0001, telephone: 301–415–8503 or by email at: *Robert.Radlinski@nrc.gov.*

SUPPLEMENTARY INFORMATION:

I. Accessing Information and Submitting Comments

A. Accessing Information

Please refer to Docket ID NRC–2012–0159 when contacting the NRC about the availability of information regarding this document. You may access information related to this document, which the NRC possesses and is publicly available, by the following methods:

- *Federal Rulemaking Web Site:* Go to http://www.regulations.gov and search for Docket ID NRC–2012–0159.
- *NRC's Agencywide Documents Access and Management System (ADAMS):* You may access publicly available documents online in the NRC Library at *http://www.nrc.gov/reading-rm/adams.html.* To begin the search, select ''ADAMS Public Documents'' and then select ''Begin Web-based ADAMS Search.'' For problems with ADAMS, please contact the NRC's Public Document Room (PDR) reference staff at 1–800–397–4209, 301–415–4737, or by email to *pdr.resource@nrc.gov.* The draft regulatory guide is available electronically under ADAMS Accession Number ML121090447. The regulatory analysis is also available under ADAMS Accession No. ML121090459.

Regulatory guides are not copyrighted, and NRC approval is not required to reproduce them.

- *NRC's PDR:* You may examine and purchase copies of public documents at the NRC's PDR, Room O1–F21, One White Flint North, 11555 Rockville Pike, Rockville, Maryland 20852.

B. Submitting Comments

Please include Docket ID NRC–2012–0159 in the subject line of your comment submission, in order to ensure that the NRC is able to make your comment submission available to the public in this docket.

The NRC cautions you not to include identifying or contact information in

comment submissions that you do not want to be publicly disclosed. The NRC posts all comment submissions at *http://www.regulations.gov* as well as enters the comment submissions into ADAMS. The NRC does not edit comment submissions to remove identifying or contact information.

If you are requesting or aggregating comments from other persons for submission to the NRC, then you should inform those persons not to include identifying or contact information in their comment submissions that they do not want to be publicly disclosed. Your request should state that the NRC will not edit comment submissions to remove such information before making the comment submissions available to the public or entering the comment submissions into ADAMS.

II. Further Information

The NRC is issuing for public comment a draft guide in the NRC's ''Regulatory Guide'' series. This series was developed to describe and make available to the public such information as methods that are acceptable to the NRC staff for implementing specific parts of the NRC's regulations, techniques that the staff uses in evaluating specific problems or postulated accidents, and data that the staff needs in its review of applications for permits and licenses.

The draft regulatory guide, entitled, ''Fuel Oil Systems for Emergency Power Supplies,'' is temporarily identified by its task number, DG–1282. The DG–1282 is proposed revision 2 of Regulatory Guide 1.137, ''Fuel Oil Systems for Standby Diesel Generators'' dated April 1979.

This guide describes a method that the NRC staff considers acceptable for use in complying with the Commission's requirements regarding fuel oil systems for safety-related emergency diesel generators and oil-fueled gas turbine generators, including assurance of adequate fuel oil quality.

Proper quantity and quality of fuel oil is necessary for proper operation of the emergency diesel generators and gas turbine generators. Appendix C to ANSI/ANS–59.51–1997, ''Recommended Fuel Oil Practices,'' addresses recommended practices for maintaining fuel oil quantity and quality. Although not a mandatory part of the standard, the NRC staff believes Appendix C serves as an acceptable basis for a program to maintain the quality of fuel oil, with additions, deletions, and clarifications as contained in this guide.

Dated at Rockville, Maryland, this 26th day of June, 2012.

For the Nuclear Regulatory Commission.

Carol Moyer,

Acting Chief, Regulatory Guide Development Branch, Division of Engineering, Office of Nuclear Regulatory Research.

[FR Doc. 2012–16426 Filed 7–3–12; 8:45 am]

BILLING CODE 7590–01–P

NUCLEAR REGULATORY COMMISSION

[Docket No. 50–336; NRC–2012–0158]

Dominion Nuclear Connecticut, Inc. Millstone Power Station, Unit 2; Environmental Assessment and Finding of No Significant Impact

The U.S. Nuclear Regulatory Commission (NRC or the Commission) is considering issuance of an exemption from the requirements of Title 10 of the Code of Federal Regulations (10 CFR) Part 50, Appendix R, ''Fire Protection Program for Nuclear Power Facilities Operating Prior to January 1, 1979,'' for Facility Operating License No. DPR–65 issued to Dominion Nuclear Connecticut, Inc. (DNC or the licensee), for operation of the Millstone Power Station, Unit 2 (MPS2) located in town of Waterford, CT. Therefore, as required by 10 CFR 51.21, the NRC staff performed an environmental assessment. Based on the results of the environmental assessment, the NRC staff is issuing a finding of no significant impact.

Environmental Assessment

Identification of the Proposed Action

DNC proposed that the NRC grant exemptions to certain NRC requirements pertaining to the NRC fire regulations. The proposed action is detailed in the licensee's application dated June 30, 2011, as supplemented by letter dated February 29, 2012. The licensee's application and supplemental submission are accessible electronically from the NRC's Agencywide Documents Access and Management System (ADAMS) under Accession Nos. ML11188A213 and ML12069A016.

Regulatory Issue Summary (RIS) 2006–10, ''Regulatory Expectations With Appendix R, Paragraph III.G.2 Operator Manual Actions,'' documents the NRC position on the use of operator manual actions (OMAs) as part of a compliance strategy to meet the requirements of 10 CFR part 50, appendix R, Section III.G.2. The NRC requires plants which credit manual actions for 10 CFR part 50, appendix R, Section III.G.2 compliance to obtain NRC approval for the manual actions using the exemption process in accordance with the requirements of 10 CFR 50.12. In response, the licensee proposed this licensing action which would exempt MPS2 from certain requirements of 10 CFR part 50, appendix R, Section III.G.2.

DNC proposed a number of OMAs in lieu of one of the means specified in Section III.G.2 to ensure a train of equipment used for hot shutdown is available when redundant trains are in the same fire area. Therefore, DNC requested exemptions from the requirements of 10 CFR part 50, appendix R, Paragraph III.G.2 for MPS2 to the extent that OMAs are necessary to achieve and maintain hot shutdown for fire areas in which both trains of safe-shutdown cables or equipment are located in the same fire area.

The Need for the Proposed Action

The proposed action is requested to permit the licensee an alternate method from those specified in 10 CFR part 50, to achieve and maintain hot shutdown conditions in the event of a fire that could disable electrical cables and equipment in the fire areas of MPS2 listed in the licensee's request for exemption.

The criteria for granting specific exemptions from 10 CFR part 50 regulations are specified in 10 CFR 50.12. In accordance with 10 CFR 50.12(a)(1), the NRC is authorized to grant an exemption upon determining that the exemption is authorized by law, will not present an undue risk to the public health and safety, and is consistent with the common defense and security.

Environmental Impacts of the Proposed Action

The NRC staff has completed its evaluation of the environmental impact of the proposed action. The NRC staff has concluded that such actions would not adversely affect the environment. The proposed action would not result in an increased radiological hazard. There will be no change to the radioactive effluent releases that effect radiation exposures to plant workers and members of the public. No changes will be made to plant structures or the site property. Therefore, no changes or different types of radiological impacts are expected as a result of the proposed exemption.

The proposed action does not result in changes to land use or water use, or result in changes to the quality or quantity of non-radiological effluents. No changes to the National Pollution Discharge Elimination System permit are needed. No effects on the aquatic or terrestrial habitat in the vicinity or the plant, or to threatened, endangered, or

protected species under the Endangered Species Act, or impacts to essential fish habitat covered by the Magnuson-Stevens Fisheries Management Act are expected. There are no impacts to historical and cultural resources. There would be no impact to socioeconomic resources. Therefore, no changes or different types of non-radiological environmental impacts are expected as a result of the proposed exemption.

Accordingly, the NRC staff concludes that there are no significant environmental impacts associated with the proposed action. The details of the staff's safety evaluation will be provided in the exemption, when it is issued.

Environmental Impacts of the Alternatives to the Proposed Action

As alternatives to the proposed action, the NRC staff is considering denial of the proposed action (i.e., the ''no-action'' alternative) or requiring the licensee to modify the facility to achieve compliance with Appendix R. Denial of the application would result in no change in current environmental impacts. The environmental impacts of the proposed action and the alternative action are similar.

Alternative Use of Resources

The action does not involve the use of any different resources than those previously considered in the U.S. Atomic Energy Commission's 1973 ''Final Environmental Statement Related to the Continuation of Construction of Unit 2 and the Operation of Units 1 and 2, Millstone Nuclear Power Station.''

Agencies and Persons Consulted

On May 14, 2012, the NRC staff consulted with the Connecticut State official, Michael Firsick of the Department of Environmental Protection, regarding the environmental impact of the proposed action. Mr. Firsick had no comments.

Finding of No Significant Impact

On the basis of the environmental assessment, the NRC staff concludes that the proposed action will not have a significant effect on the quality of the human environment. Accordingly, the NRC staff has determined not to prepare an environmental impact statement for the proposed action.

For further details with respect to the proposed action, see the licensee's application dated June 30, 2011, as supplemented by letter dated February 29, 2012. The licensee's application and supplemental submission are accessible electronically under ADAMS Accession Nos. ML11188A213 and ML12069A016. Publicly available versions of the documents may be examined, and/or copied for a fee, at the NRC's Public Document Room (PDR), located at One White Flint North, Room O1–F21, 11555 Rockville Pike (first floor), Rockville, Maryland 20852. Publicly available documents created or received at the NRC are accessible electronically through the ADAMS in the NRC Library at *http://www.nrc.gov/reading-rm/adams.html.* Persons who do not have access to ADAMS or who encounter problems in accessing the documents located in ADAMS should contact the NRC PDR Reference staff by telephone at 1–800–397–4209 or 301–415–4737, or send an email to *pdr.resource@nrc.gov.*

Dated at Rockville, Maryland, this 27th day of June 2012.

For the Nuclear Regulatory Commission.

James Kim,

Project Manager, Plant Licensing Branch I–1, Division of Operating Reactor Licensing, Office of Nuclear Reactor Regulation.

[FR Doc. 2012–16406 Filed 7–3–12; 8:45 am]

BILLING CODE 7590–01–P

POSTAL REGULATORY COMMISSION

[Docket No. MC2012–30; Order No. 1386]

Changes in Postal Rates

AGENCY: Postal Regulatory Commission.

ACTION: Notice.

SUMMARY: The Commission is noticing a recently-filed Postal Service request to add a padded flat rate envelope to its Express Mail International product. This notice addresses procedural steps associated with the filing.

DATES: *Replies to Postal Service response to information request are due:* July 11, 2012.

ADDRESSES: Submit comments electronically via the Commission's Filing Online system at *http://www.prc.gov.* Commenters who cannot submit their views electronically should contact the person identified in **FOR FURTHER INFORMATION CONTACT** by telephone for advice on alternatives to electronic filing.

FOR FURTHER INFORMATION CONTACT: Stephen L. Sharfman, General Counsel at 202–789–6820.

SUPPLEMENTARY INFORMATION: *Introduction.* On June 25, 2012, the Postal Service filed notice with the Commission of a proposal characterized as a minor classification change under 39 CFR parts 3090 and 3091, along with a conforming revision to the Mail Classification Schedule (MCS).[1] The change adds the Express Mail International (EMI) Padded Flat Rate Envelope as a Flat Rate Envelope option in the EMI product category. Notice at 1. The stated purpose of the change is to increase customer Flat Rate Envelope options.

In support of its filing, the Postal Service states that the dimensions of the EMI Padded Flat Rate Envelope (12.5 inches by 9.5 inches) are the same as those of the EMI Flat Rate Envelope. It states that the price for the Padded Flat Rate Envelope ($29.25 to Canada and $38.00 to all other countries that offer EMI service) is the same as the price for the current EMI Flat Rate Envelope and EMI Legal Flat Rate Envelope. In addition, it notes that all standards that apply to the EMI Flat Rate Envelope and EMI Legal Flat Rate Envelope (*e.g.,* maximum weight limit of 20 pounds) apply to the EMI Padded Flat Rate Envelope. *Id.* The Postal Service asserts that the changes are consistent with 39 U.S.C. 3642 and should be incorporated by the Commission into the MCS. *Id.* at 2.

The Commission establishes Docket No. MC2012–30 for consideration of matters related to the Postal Service's filing. It appoints Kenneth E. Richardson to represent the interests of the general public (Public Representative) in this proceeding. Interested persons may comment on the proposed change and on the Postal Service's response to the matter addressed below no later than July 11, 2012.

Information Request. The Postal Service notes that it filed the instant notice (affecting international mail offerings) one business day after filing a notice of changes in rates of general applicability and concomitant classification changes for a domestic Express Mail Padded Flat Rate Envelope. *Id.* (citing notice of the United States Postal Service of Changes in Rates of General Applicability for a Competitive Product, Established in Governors' Decision No. 12–1, PRC Docket No. CP2012–39, June 22, 2012).[2]

The instant notice would likewise appear to effect a change in rates of general applicability. Accordingly, the Postal Service is requested to address, no later than July 6, 2012, why a filing similar to that made in Docket No. CP2012–39 was not made with respect to the change in EMI rates. If, on reconsideration, the instant filing should have been filed pursuant to 39 CFR part 3015, the Postal Service

[1] Notice of United States Postal Service of Classification Changes, June 25, 2012 (Notice).

[2] The notices referred to in this order can be accessed via the Commission's Web site, (*http://www.prc.gov*).

may file the supporting material in the instant docket.

The notices referred to in this order can be accessed via the Commission's Web site, (*http://www.prc.gov*).

It is ordered:

1. The Commission establishes Docket No. MC2012–30 for consideration of matters raised by the Postal Service's notice.

2. The Postal Service's response to the Information Request posed in the body of this order is due no later than July 6, 2012.

3. Comments addressing matters raised in the Postal Service's notice and the Information Request posed in the body of this order are due no later than July 11, 2012.

4. Pursuant to 39 U.S.C. 505, Kenneth E. Richardson is appointed to serve as the officer of the Commission (Public Representative) to represent the interests of the general public in this proceeding.

5. The Secretary shall arrange for publication of this order in the **Federal Register**.

By the Commission.

Shoshana M. Grove,

Secretary.

[FR Doc. 2012–16434 Filed 7–3–12; 8:45 am]

BILLING CODE 7710–FW–P

RAILROAD RETIREMENT BOARD

Computer Matching and Privacy Protection Act of 1988; Report of Matching Program: RRB and State Agencies

AGENCY: U.S. Railroad Retirement Board (RRB).

ACTION: Notice of a renewal of an existing computer matching program due to expire on August 12, 2012.

SUMMARY: The Privacy Act, as amended, requires the RRB to issue a public notice of its use and intent to use, information obtained from state agencies in ongoing computer matching programs regarding individuals who received benefits under the Railroad Unemployment Insurance Act.

The information received through the computer matching programs may consist of either: (1) A report of unemployment or sickness payments made by the state for the same period that benefits were paid by the RRB, or (2) a report of wages paid to an individual, and the names and addresses of employers who reported those wages to the state for the same period that benefits were paid by the RRB.

The purpose of this notice is to advise individuals applying for or receiving benefits under the Railroad Unemployment Insurance Act of the use made by the RRB of the information obtained from state agencies by means of a computer match.

DATES: Submit comments on or before August 14, 2012.

ADDRESSES: Address any comments concerning this notice in writing to the Secretary to the Board, U.S. Railroad Retirement Board, 844 North Rush Street, Chicago, Illinois 60611–2092.

FOR FURTHER INFORMATION CONTACT: Mr. Timothy S. Grant, Chief Privacy Officer, U.S. Railroad Retirement Board, 844 North Rush Street, Attn: BIS–IRMC, Chicago, Illinois 60611–2092.

SUPPLEMENTARY INFORMATION:

A. General

The Computer Matching and Privacy Protection Act of 1988 (Pub. L. 100–503), amended the Privacy Act (5 U.S.C. 552a) by describing the conditions under which computer matching involving the Federal government could be performed, and by adding certain protections for persons applying for, and receiving, Federal benefits. Section 7201 of the Omnibus Budget Reconciliation Act of 1990 (Pub. L. 101–508) further amended the Privacy Act regarding protection for such persons.

The Privacy Act, as amended, regulates the use of computer matching by Federal agencies when matching records in a system of records with other Federal, State, or local government records. It requires Federal agencies involved in computer matching programs to:

(1) Negotiate written agreements with the other agency or agencies participating in the matching programs;

(2) Obtain approval of the matching agreement by the Data Integrity Boards of the participating Federal agencies;

(3) Publish notice of the computer matching program in the **Federal Register**;

(4) Furnish reports about matching programs to Congress and Office of Management and Budget;

(5) Notify beneficiaries and applicants that their records are subject to matching; and

(6) Verify match findings before reducing, suspending, terminating, or denying a person's benefits or payments.

B. RRB Computer Matches Subject to the Privacy Act

We have taken action to ensure that all of our computer matching programs comply with the requirements of the Privacy Act, as amended.

C. Notice of Computer Matching Program: RRB With State Agencies

1. *Name of Participating Agencies:* The Railroad Retirement Board and agencies of all 50 states which provide unemployment or sickness benefits.

2. *Purpose of the Match:* To identify individuals who have improperly collected benefits provided by the RRB under the Railroad Unemployment Insurance Act while earning remuneration in non-railroad employment or while collecting unemployment or sickness benefits paid by a state agency.

3. *Authority for Conducting the Match:* The Social Security Act (42 U.S.C. 503(c)(1)), and Railroad Unemployment Insurance Act (45 U.S.C. 231(b) and 362(f)). Disclosures under this agreement are made in accordance with the Privacy Act, as amended (5 U.S.C. 552a(b)(3)) and in compliance with the matching procedures in the Privacy Act (5 U.S.C. 552a(o), (p), and (r)).

4. *Categories of Records and Individuals Covered:* All recipients of benefits under the Railroad Unemployment Insurance Act during a given period who reside in the states with which the RRB has negotiated a computer matching program agreement. Records furnished by the states are covered under Privacy Act system of records RRB–21, Railroad Unemployment and Sickness Insurance Benefit System, which was published in the **Federal Register** (FR) on July 26, 2010 (75 FR 43725).

5. *Inclusive Dates of the Matching Program:* This computer matching program is effective August 10, 2012 through February 10, 2015. Before becoming effective the following notice periods must have lapsed: 30 Days after publication in the **Federal Register** and 40 days after notice of the matching program sent to Congress and OMB. The computer matching program is valid for 18 months from the effective date and, if both agencies meet certain conditions, the RRB may grant a one-time extension of another 12 months. The number of matches conducted with each state during the period of the match will vary from state to state, depending on whether the computer matching agreement provides for matches to be conducted quarterly or every six months.

6. *Procedure:* The RRB will furnish the state agency a file of records. The data elements will consist of beneficiary identifying information, such as name and Social Security Number (SSN), as well as the overall period during which the individual received benefits under

the Railroad Unemployment Insurance Act. The state agency will match the identifying information. If the matching operation reveals that the individual who had received benefits under the Railroad Unemployment Insurance Act also received either unemployment or sickness insurance benefits from the state for any days in the period, the state agency will notify the RRB. Depending on arrangements made between the two jurisdictions, and, in the case of state sickness benefits, on the applicable state law, either the RRB or the state agency will attempt to recover the amount of the duplicate payments.

If the matching operation reveals that wages had been reported for the individual during the requested period, the state will notify the RRB of this fact and furnish a breakdown of the wages, as well as the name and address of each employer who reported earnings for the individual. The RRB will then contact each employer who reported earnings for the individual for the given period. Only if the employment is verified will the RRB take action to recover the overpayment. If the RRB benefits had been paid under the Railroad Unemployment Insurance Act, recovery is limited to payments made for those days on which the individual was gainfully employed.

7. *Other information:* The notice we are giving here is in addition to any individual notice. We will file a report with the Committee on Homeland Security and Governmental Affairs of the Senate, the Committee on Oversight and Government Reform of the House of Representatives, and the Office of Information and Regulatory Affairs, Office of Management and Budget (OMB).

Dated: June 7, 2012.

By Authority of the Board.

Martha P. Rico,

Secretary to the Board.

[FR Doc. 2012–16384 Filed 7–3–12; 8:45 am]

BILLING CODE P

SECURITIES AND EXCHANGE COMMISSION

Sunshine Act Meeting

Notice is hereby given, pursuant to the provisions of the Government in the Sunshine Act, Public Law 94–409, that the Securities and Exchange Commission will hold an Open Meeting on Wednesday, August 22, 2012 at 10 a.m., in the Auditorium, Room L–002.

The subject matters of the Open Meeting will be:

Item 1: The Commission will consider whether to adopt rules regarding disclosure and reporting obligations with respect to the use of conflict minerals to implement the requirements of Section 1502 of the Dodd-Frank Wall Street Reform and Consumer Protection Act.

Item 2: The Commission will consider whether to adopt rules regarding disclosure and reporting obligations with respect to payments to governments made by resource extraction issuers to implement the requirements of Section 1504 of the Dodd-Frank Wall Street Reform and Consumer Protection Act.

Item 3: The Commission will consider rules to eliminate the prohibition against general solicitation and general advertising in securities offerings conducted pursuant to Rule 506 of Regulation D under the Securities Act and Rule 144A under the Securities Act, as mandated by Section 201(a) of the Jumpstart Our Business Startups Act.

At times, changes in Commission priorities require alterations in the scheduling of meeting items.

For further information and to ascertain what, if any, matters have been added, deleted or postponed, please contact:

The Office of the Secretary at (202) 551–5400.

Dated: July 2, 2012.

Elizabeth M. Murphy,

Secretary.

[FR Doc. 2012–16551 Filed 7–2–12; 4:15 pm]

BILLING CODE 8011–01–P

SECURITIES AND EXCHANGE COMMISSION

[Release No. 34–67298; File No. SR–EDGX–2012–22]

Self-Regulatory Organizations; EDGX Exchange, Inc.; Notice of Filing and Immediate Effectiveness of Proposed Rule Change Relating to New Simultaneous Routing Functionality

June 28, 2012.

Pursuant to Section 19(b)(1) of the Securities Exchange Act of 1934 (the ''Act''),[1] and Rule 19b–4 thereunder,[2] notice is hereby given that on June 19, 2012, EDGX Exchange, Inc. (the ''Exchange'' or ''EDGX'') filed with the Securities and Exchange Commission (''Commission'') the proposed rule change as described in Items I and II below, which items have been prepared by the Exchange. The Commission is publishing this notice to solicit comments on the proposed rule change from interested persons.

I. Self-Regulatory Organization's Statement of the Terms of Substance of the Proposed Rule Change

EDGX proposes to modify existing routing options contained in EDGX Rule 11.9(b)(3) to provide Users[3] with new simultaneous routing functionality as a means by which Members' orders may be routed to certain destinations on the System routing table. The text of the proposed rule change is attached as Exhibit 5 and is available on the Exchange's Web site at *www.directedge.com*, at the Exchange's principal office, and at the Public Reference Room of the Commission.

II. Self-Regulatory Organization's Statement of the Purpose of, and Statutory Basis for, the Proposed Rule Change

In its filing with the Commission, the Exchange included statements concerning the purpose of, and basis for, the proposed rule change and discussed any comments it received on the proposed rule change. The text of these statements may be examined at the places specified in Item IV below. The self-regulatory organization has prepared summaries, set forth in Sections A, B and C below, of the most significant aspects of such statements.

A. Self-Regulatory Organization's Statement of the Purpose of, and the Statutory Basis for, the Proposed Rule Change

1. Purpose

The Exchange's current list of routing options is codified in Rule 11.9(b)(3). In this filing, the Exchange proposes to amend paragraph (3) of Rule 11.9(b) to indicate that the Exchange reserves the right to route orders both sequentially and simultaneously. This amendment allows for simultaneous routing to certain destinations on the System routing table. With respect to Rules 11.9(b)(3)(a), (b), (h), and (m), specifically, the Exchange currently sends orders to certain destinations on the System routing table only in a sequential manner. For example, if an order cannot be filled after checking for available shares on the Exchange's book, the Exchange will route such order to certain destinations on the System routing table one at a time until all such destinations are exhausted, the order is cancelled, or the order is filled. As a result of the proposed change in functionality, which would allow such

[1] 15 U.S.C. 78s(b)(1).

[2] 17 CFR 240.19b–4.

[3] As defined in Rule 1.5(ee).

orders to be sent either sequentially or simultaneously, language in paragraph (3) of Rule 11.9(b) will be amended to account for the fact that the Exchange reserves the right to ''route orders simultaneously or sequentially''. Other routing strategies in Rule 11.9(b) are already written broadly enough to allow for both sequential or simultaneous routing of orders, which the Exchange operates in a discretionary manner depending on the type of venues with which the order flow is routed to.[4] Therefore, this amendment simply deletes the word ''sequentially'' from Rules 11.9(b)(3)(a), (b), (h), and (m) so that the Exchange has the discretion to do simultaneous or sequential routing as to these strategies.

Simultaneous routing is an improvement on the current sequential manner in which orders are filled because it allows an order to be broken up into child orders to be sent to multiple destinations at one time instead of to one venue after another. Doing so has the potential to improve an order's fill rate, as well as reduce latency. The Exchange believes that the proposed introduction of this functionality will provide Users with increased access to multiple sources of liquidity and greater flexibility in routing orders, without having to develop their own complicated routing strategies. The Exchange also believes the proposed modification will provide additional specificity to the Exchange's rulebook regarding routing strategies and will further enhance transparency with respect to Exchange routing offerings.

The Exchange will notify its Members in an information circular of (a) the exact implementation date of this rule change, which will be no later than July 31, 2012; and (b) the manner in which certain routing options may function (*i.e.,* sequentially or simultaneously), in an effort to afford Members with transparency regarding the same.

2. Basis

The Exchange believes that the proposed rule change is consistent with Section 6(b)(5) of the Act,[5] which requires the rules of an exchange to promote just and equitable principles of trade, to remove impediments to and perfect the mechanism of a free and open market and a national market system and, in general, to protect investors and the public interest. More specifically, the Exchange believes that the proposed rule change will improve an order's fill rate as well as reduce latency. The proposed rule change will thus contribute to perfecting the mechanism of a free and open market and a national market system, and is also consistent with the protection of investors and the public interest. The proposed rule change and resulting information circulars that the Exchange will issue will afford Members transparency into how various routing options may function (whether simultaneous or sequential).

B. Self-Regulatory Organization's Statement on Burden on Competition

The Exchange does not believe that the proposed rule change will impose any burden on competition that is not necessary or appropriate in furtherance of the purposes of the Act.

C. Self-Regulatory Organization's Statement on Comments on the Proposed Rule Change Received From Members, Participants, or Others

The Exchange has neither solicited nor received written comments on the proposed rule change.

III. Date of Effectiveness of the Proposed Rule Change and Timing for Commission Action

Because the proposed rule change does not (i) Significantly affect the protection of investors or the public interest; (ii) impose any significant burden on competition; and (iii) become operative for 30 days from the date on which it was filed, or such shorter time as the Commission may designate if consistent with the protection of investors and the public interest, the proposed rule change has become effective pursuant to Section 19(b)(3)(A) of the Act[6] and Rule 19b–4(f)(6) thereunder.[7]

A proposed rule change filed pursuant to Rule 19b–4(f)(6) under the Act[8] normally does not become operative for 30 days after the date of its filing. However, Rule 19b–4(f)(6)[9] permits the Commission to designate a shorter time if such action is consistent with the protection of investors and the public interest. The Exchange has asked the Commission to waive the 30-day operative delay so that the proposal may become operative immediately upon filing, noting that similar functionality is already offered by other market centers.[10] The Commission believes that waiving the 30-day operative delay is consistent with the protection of investors and the public interest. Therefore, the Commission designates the proposal operative upon filing.[11]

At any time within 60 days of the filing of the proposed rule change, the Commission summarily may temporarily suspend such rule change if it appears to the Commission that such action is necessary or appropriate in the public interest, for the protection of investors, or otherwise in furtherance of the purposes of the Act.

IV. Solicitation of Comments

Interested persons are invited to submit written data, views, and arguments concerning the foregoing, including whether the proposed rule change is consistent with the Act. Comments may be submitted by any of the following methods:

Electronic Comments

- Use the Commission's Internet comment form (*http://www.sec.gov/rules/sro.shtml*); or
- Send an email to *rule-comments@sec.gov.* Please include File Number SR–EDGX–2012–22 on the subject line.

Paper Comments

- Send paper comments in triplicate to Elizabeth M. Murphy, Secretary, Securities and Exchange Commission, 100 F Street NE., Washington, DC 20549–1090.

All submissions should refer to File Number SR–EDGX–2012–22. This file number should be included on the subject line if email is used. To help the Commission process and review your comments more efficiently, please use only one method. The Commission will post all comments on the Commission's Internet Web site (*http://www.sec.gov/rules/sro.shtml*). Copies of the submission, all subsequent amendments, all written statements with respect to the proposed rule change that are filed with the Commission, and all written

[4] Regarding simultaneous routing, the Exchange may, for example, use a pro-rata mechanism to allocate the number of shares from the parent order (i.e., a child order) among multiple dark pools where each applicable venue will be assigned a relative weight based on a variety of factors including, but not limited to, latency, liquidity and transaction costs.

[5] 15 U.S.C. 78f(b)(5).

[6] 15 U.S.C. 78s(b)(3)(A).

[7] 17 CFR 240.19b–4(f)(6). As required under Rule 19b–4(f)(6)(iii), the Exchange provided the Commission with written notice of its intent to file the proposed rule change along with a brief description and the text of the proposed rule change, at least five business days prior to the date of filing of the proposed rule change, or such shorter time as designated by the Commission.

[8] 17 CFR 240.19b–4(f)(6).

[9] 17 CFR 240.19b–4(f)(6).

[10] *See* BATS Rule 11.13(a)(3)(B)–(D) (routing strategies listed in these rules may be routed simultaneously).

[11] For purposes only of waiving the 30-day operative delay, the Commission has considered the proposed rule's impact on efficiency, competition, and capital formation. *See* 15 U.S.C. 78c(f).

communications relating to the proposed rule change between the Commission and any person, other than those that may be withheld from the public in accordance with the provisions of 5 U.S.C. 552, will be available for Web site viewing and printing in the Commission's Public Reference Room, 100 F Street NE., Washington, DC 20549, on official business days between the hours of 10 a.m. and 3 p.m. Copies of the filing also will be available for inspection and copying at the principal office of the Exchange. All comments received will be posted without change; the Commission does not edit personal identifying information from submissions. You should submit only information that you wish to make available publicly. All submissions should refer to File Number SR–EDGX–2012–22 and should be submitted on or before July 26, 2012.

For the Commission, by the Division of Trading and Markets, pursuant to delegated authority.[12]

Kevin M. O'Neill,

Deputy Secretary.

[FR Doc. 2012–16435 Filed 7–3–12; 8:45 am]

BILLING CODE 8011–01–P

[12] 17 CFR 200.30–3(a)(12).

SECURITIES AND EXCHANGE COMMISSION

[Release No. 34–67293; File No. SR–NASDAQ–2012–072]

Self-Regulatory Organizations; the NASDAQ Stock Market LLC; Notice of Filing of Proposed Rule Change With Respect to the Amendment of the By-Laws of Its Parent Corporation, the NASDAQ OMX Group, Inc. (''NASDAQ OMX'')

June 28, 2012.

Pursuant to Section 19(b)(1) of the Securities Exchange Act of 1934 (''Act'')[1] and Rule 19b–4 thereunder,[2] notice is hereby given that on June 20, 2012, the NASDAQ Stock Market LLC (''NASDAQ'' or the ''Exchange'') filed with the Securities and Exchange Commission (''Commission'') the proposed rule change as described in Items II and III below, which Items have been prepared by the Exchange. The Commission is publishing this notice to solicit comments on the proposed rule change from interested persons.

[1] 15 U.S.C. 78s(b)(1).

[2] 17 CFR 240.19b–4.

I. Self-Regulatory Organization's Statement of the Terms of Substance of the Proposed Rule Change

The Exchange proposes a rule change with respect to the amendment of the by-laws of its parent corporation, The NASDAQ OMX Group, Inc. (''NASDAQ OMX''). The text of the proposed rule change is below. The text of the proposed rule change is available at *http://nasdaq.cchwallstreet.com/,* at NASDAQ's principal office, and at the Commission's Public Reference Room.

II. Self-Regulatory Organization's Statement of the Purpose of, and Statutory Basis for, the Proposed Rule Change

In its filing with the Commission, the Exchange included statements concerning the purpose of and basis for the proposed rule change and discussed any comments it received on the proposed rule change. The text of these statements may be examined at the places specified in Item IV below. The Exchange has prepared summaries, set forth in Sections A, B, and C below, of the most significant aspects of such statements.

A. Self-Regulatory Organization's Statement of the Purpose of, and Statutory Basis for, the Proposed Rule Change

1. Purpose

NASDAQ OMX is proposing amendments to provisions of its by-laws pertaining to the composition of the Management Compensation Committee of the NASDAQ OMX Board of Directors. Specifically, NASDAQ OMX is amending the compositional requirements of its Management Compensation Committee in Section 4.13 to replace a requirement that the committee be composed of a majority of Non-Industry Directors[3] with a requirement that the number of Non-Industry Directors on the committee equal or exceed the number of Industry Directors. Thus, in the case of a committee composed of four Directors, the current by-law provides that only one Director may be an Industry Director, while the amended by-law would allow up to two Directors to be Industry Directors. The proposed compositional requirement for the committee with regard to the balance between Industry Directors and Non-Industry Directors would be the same as that already provided for in the by-laws with respect to the Executive Committee and the Nominating and Governance Committee, as well as the full Board of Directors.

NASDAQ OMX and the Exchange believe that the change will provide greater flexibility to NASDAQ OMX with regard to populating a committee that includes Directors with relevant expertise and that is not excessively large in relation to the size of the full Board of Directors, while continuing to ensure that Directors associated with NASDAQ members and other broker-dealers do not exert disproportionate influence of the governance of NASDAQ OMX. As required by NASDAQ Rule 5605(d), the committee would continue at all times to be composed solely of Directors who are independent within the meaning of that rule.

2. Statutory Basis

NASDAQ believes that the proposed rule change is consistent with the provisions of Section 6 of the Act,[4] in general, and with Sections 6(b)(1) and (b)(5) of the Act,[5] in particular, in that

[3] An ''Industry Director'' means a Director (excluding any two officers of NASDAQ OMX, selected at the sole discretion of the Board, amongst those officers who may be serving as Directors (the ''Staff Directors'')) who (1) is or has served in the prior three years as an officer, director, or employee of a broker or dealer, excluding an outside director or a director not engaged in the day-to-day management of a broker or dealer; (2) is an officer, director (excluding an outside director), or employee of an entity that owns more than ten percent of the equity of a broker or dealer, and the broker or dealer accounts for more than five percent of the gross revenues received by the consolidated entity; (3) owns more than five percent of the equity securities of any broker or dealer, whose investments in brokers or dealers exceed ten percent of his or her net worth, or whose ownership interest otherwise permits him or her to be engaged in the day-to-day management of a broker or dealer; (4) provides professional services to brokers or dealers, and such services constitute 20 percent or more of the professional revenues received by the Director or 20 percent or more of the gross revenues received by the Director's firm or partnership; (5) provides professional services to a director, officer, or employee of a broker, dealer, or corporation that owns 50 percent or more of the voting stock of a broker or dealer, and such services relate to the director's, officer's, or employee's professional capacity and constitute 20 percent or more of the professional revenues received by the Director or 20 percent or more of the gross revenues received by the Director's firm or partnership; or (6) has a consulting or employment relationship with or provides professional services to NASDAQ OMX or any affiliate thereof or to the Financial Industry Regulatory Authority (''FINRA'') or has had any such relationship or provided any such services at any time within the prior three years.

A ''Non-Industry Director'' means a Director (excluding the Staff Directors) who is (1) a Public Director; (2) an officer, director, or employee of an issuer of securities listed on a national securities exchange operated by any subsidiary of NASDAQ OMX that is a self-regulatory organization; or (3) any other individual who would not be an Industry Director.

A ''Public Director'' means a Director who has no material business relationship with a broker or dealer, NASDAQ OMX or its affiliates, or FINRA.

[4] 15 U.S.C. 78f.

[5] 15 U.S.C. 78f(b)(1), (5).

the proposal enables NASDAQ to be so organized and to have the capacity to be able to carry out the purposes of the Act and to comply with and enforce compliance by members and persons associated with members with provisions of the Act, the rules and regulations thereunder, and NASDAQ rules, and is designed to prevent fraudulent and manipulative acts and practices, to promote just and equitable principles of trade, to foster cooperation and coordination with persons engaged in regulating, clearing, settling, processing information with respect to, and facilitating transactions in securities, to remove impediments to and perfect the mechanism of a free and open market and a national market system, and, in general, to protect investors and the public interest.

NASDAQ believes that the change will provide greater flexibility to NASDAQ OMX with regard to populating a committee that includes Directors with relevant expertise and that is not excessively large in relation to the size of the full Board of Directors, while continuing to ensure that Directors associated with NASDAQ members and other broker-dealers do not exert disproportionate influence of the governance of NASDAQ OMX.

B. Self-Regulatory Organization's Statement on Burden on Competition

The Exchange does not believe that the proposed rule change will impose any burden on competition not necessary or appropriate in furtherance of the purposes of the Act.

C. Self-Regulatory Organization's Statement on Comments on the Proposed Rule Change Received From Members, Participants, or Others

Written comments were neither solicited nor received.

III. Date of Effectiveness of the Proposed Rule Change and Timing for Commission Action

Within 45 days of the date of publication of this notice in the **Federal Register** or within such longer period (i) as the Commission may designate up to 90 days of such date if it finds such longer period to be appropriate and publishes its reasons for so finding or (ii) as to which the Exchange consents, the Commission shall:

A. By order approve or disapprove such proposed rule change; or

B. Institute proceedings to determine whether the proposed rule change should be disapproved.

IV. Solicitation of Comments

Interested persons are invited to submit written data, views, and arguments concerning the foregoing, including whether the proposed rule change is consistent with the Act. Comments may be submitted by any of the following methods:

Electronic Comments

- Use the Commission's Internet comment form (*http://www.sec.gov/rules/sro.shtml*); or
- Send an email to *rule-comments@sec.gov.* Please include File Number SR–NASDAQ–2012–072 on the subject line.

Paper Comments

- Send paper comments in triplicate to Elizabeth M. Murphy, Secretary, Securities and Exchange Commission, 100 F Street NE., Washington, DC 20549–1090.

All submissions should refer to File Number SR–NASDAQ–2012–072. This file number should be included on the subject line if email is used. To help the Commission process and review your comments more efficiently, please use only one method. The Commission will post all comments on the Commission's Internet Web site (*http://www.sec.gov/rules/sro.shtml*). Copies of the submission, all subsequent amendments, all written statements with respect to the proposed rule change that are filed with the Commission, and all written communications relating to the proposed rule change between the Commission and any person, other than those that may be withheld from the public in accordance with the provisions of 5 U.S.C. 552, will be available for Web site viewing and printing in the Commission's Public Reference Room, 100 F Street NE., Washington, DC 20549, on official business days between the hours of 10 a.m. and 3 p.m. Copies of the filing also will be available for inspection and copying at the principal office of the Exchange. All comments received will be posted without change; the Commission does not edit personal identifying information from submissions. You should submit only information that you wish to make available publicly. All submissions should refer to File Number SR–NASDAQ–2012–072 and should be submitted on or before July 26, 2012.

For the Commission, by the Division of Trading and Markets, pursuant to delegated authority.[6]

Kevin M. O'Neill,

Deputy Secretary.

[FR Doc. 2012–16404 Filed 7–3–12; 8:45 am]

BILLING CODE 8011–01–P

SECURITIES AND EXCHANGE COMMISSION

[Release No. 34–67297; File No. SR–NASDAQ–2012–063]

Self-Regulatory Organizations; The NASDAQ Stock Market LLC; Notice of Filing and Immediate Effectiveness of a Proposed Rule Change Applicable to a New Version of the NASDAQ TotalView-ITCH Equities Depth Feed and Related Distributor and Administration Fees

June 28, 2012.

Pursuant to Section 19(b)(1) of the Securities Exchange Act of 1934 (''Act''),[1] and Rule 19b–4 thereunder,[2] notice is hereby given that on June 15, 2012, The NASDAQ Stock Market LLC (''Nasdaq'' or ''Exchange'') filed with the Securities and Exchange Commission (''SEC'' or ''Commission'') the proposed rule change as described in Items I, II and III below, which Items have been prepared by Nasdaq. The Commission is publishing this notice to solicit comments on the proposed rule from interested persons.

I. Self-Regulatory Organization's Statement of the Terms of Substance of the Proposed Rule Change

Nasdaq proposes to establish fees for a new optional delivery mechanism for Nasdaq Depth data (defined below). Specifically, Nasdaq proposes to establish Distributor and Administration fees for a hardware-based version of Nasdaq TotalView-ITCH data and is not offering a new market data product.

The text of the proposed rule change is below. Proposed new language is in italics; proposed deletions are in brackets.[3]

* * * * *

7026. Distribution Models

(a)–(b) No change.

(c) [Reserved] *Hardware-Based Delivery of Nasdaq Depth data*

(1) The charges to be paid by Distributors for processing Nasdaq Depth data sourced from a Nasdaq hardware-based market data format shall be:

---

[6] 17 CFR 200.30–3(a)(12).

[1] 15 U.S.C. 78s(b)(1).

[2] 17 CFR 240.19b–4.

[3] Changes are marked to the rule text that appears in the electronic Nasdaq Manual found at *http://nasdaqomx.cchwallstreet.com.*

Hardware-based delivery of Nasdaq depth data	Monthly fee
Internal Only Distributor	*$25,000 per Distributor.*
External Only Distributor	*$2,500 per Distributor.*
Internal and External Distributor	*$27,500 per Distributor.*
Managed Data Solution Administration Fee	*$3,000 = 1 Subscriber.* *$3,500 = 2 Subscribers.* *$4,000 = 3 Subscribers.* *$500 for each additional Subscriber.*

(2) ''Hardware-Based Delivery'' means that a distributor is processing data sourced from a Nasdaq hardware coded market data format such as TotalView-ITCH FPGA.

(3) Distributors of Nasdaq Depth data also are subject to the market data fees as set forth in this rule, Nasdaq Rule 7019(b) and Nasdaq Rule 7023.

* * * * *

II. Self-Regulatory Organization's Statement of the Purpose of, and Statutory Basis for, the Proposed Rule Change

In its filing with the Commission, Nasdaq included statements concerning the purpose of and basis for the proposed rule change and discussed any comments it received on the proposed rule change. The text of these statements may be examined at the places specified in Item IV below. Nasdaq has prepared summaries, set forth in sections A, B, and C below, of the most significant aspects of such statements.

A. Self-Regulatory Organization's Statement of the Purpose of, and Statutory Basis for, the Proposed Rule Change

1. Purpose

Nasdaq is proposing to amend Nasdaq Rule 7026 (Distribution Models) to establish Distributor and Administration fees for an optional hardware-based delivery of Nasdaq Depth-of-Book data, defined in Nasdaq Rule 7023 to include TotalView, OpenView, and NASDAQ Level 2 (collectively, ''Nasdaq Depth data''). This new delivery option of the Nasdaq TotalView-ITCH equities depth feed uses field-programmable gate array (''FPGA'') technology. In offering a hardware-delivery mechanism, Nasdaq is serving those customers requiring a predictable latency profile throughout the trading day. By taking advantage of hardware parallelism, FPGA technology is capable of processing more data packets during peak market conditions without the introduction of variable queuing latency.

The proposed Distributor fee for utilizing the optional hardware-based delivery of Nasdaq Depth data is $25,000 for internal only distribution, $2,500 for external only distribution and $27,500 for internal and external distribution. The optional Managed Data Solution (''MDS'') Administration fee is tiered based upon the number of subscribers, starting at $3,000 as outlined above. There will be no change in Nasdaq Depth data subscriber fees as a result of these other fee changes.

This new pricing option is available to all firms, regardless of how they choose to access the hardware-based version of Nasdaq Depth data, and is in response to industry demand, as well as due to changes in the technology to distribute and consume market data. Distributors opting to pay for the hardware-based delivery of Nasdaq Depth data would still be fee liable for the applicable market data fees, as described in Nasdaq Rule 7026, Nasdaq Rule 7019(b) and Nasdaq Rule 7023.

Competition for depth data is considerable and the Exchange believes that this proposal clearly evidences such competition. The Exchange is offering a new pricing model in order to keep pace with changes in the industry and evolving customer needs as new technologies emerge and products continue to develop and change. It is entirely optional and is geared towards attracting new customers, as well as retaining existing customers.

The proposed fees are based on pricing conventions and distinctions that exist in Nasdaq's current fee schedule, and the fee schedules of other exchanges. These distinctions (*e.g.,* internal versus external distribution, as well as for MDS) for the proposed optional Distributor and Administration fees for hardware-based delivery of Nasdaq Depth data are based on a careful analysis of empirical data and the application of time-tested pricing principles already accepted by the Commission and discussed in greater depth in the Statutory Basis section below. Also, the costs associated with the hardware-based delivery system for Nasdaq Depth data are higher than a software-based solution since it involves the expense of hiring personnel to create and maintain the product, as well as creating, shipping, installing and maintaining the new equipment and codebase. Because it uses a distinct technology, the overall costs of creation and maintenance of the hardware-based version of TotalView-ITCH are higher than the software-based version. From a messaging perspective, the data content and sequencing will be identical on both the hardware- and software-based versions of the TotalView-ITCH product.

The proposed hardware-based delivery of Nasdaq Depth data is completely optional. Nasdaq is offering this new delivery mechanism for the Nasdaq TotalView-ITCH product, which uses FPGA technology, and is designed to deliver Nasdaq direct data content in a predictable manner throughout the trading day.

2. Statutory Basis

Nasdaq believes that the proposed rule change is consistent with the provisions of Section 6 of the Act,[4] in general, and with Section 6(b)(4) of the Act,[5] in particular, in that it provides an equitable allocation of reasonable fees among users and recipients of Nasdaq data. In adopting Regulation NMS, the Commission granted self-regulatory organizations and broker-dealers increased authority and flexibility to offer new and unique market data to the public. It was believed that this authority would expand the amount of data available to consumers, and also spur innovation and competition for the provision of market data.

The Commission concluded that Regulation NMS—by deregulating the market in proprietary data—would itself further the Act's goals of facilitating efficiency and competition:

> [E]fficiency is promoted when broker-dealers who do not need the data beyond the prices, sizes, market center identifications of the NBBO and consolidated last sale information are not required to receive (and pay for) such data. The Commission also believes that efficiency is promoted when broker-dealers may choose to receive (and pay for) additional market data based on their own internal analysis of the need for such data.[6]

By removing ''unnecessary regulatory restrictions'' on the ability of exchanges to sell their own data, Regulation NMS

[4] 15 U.S.C. 78f.

[5] 15 U.S.C. 78f(b)(4).

[6] Securities Exchange Act Release No. 51808 (June 9, 2005), 70 FR 37496 (June 29, 2005).

advanced the goals of the Act and the principles reflected in its legislative history. If the free market should determine whether proprietary data is sold to broker-dealers at all, it follows that the price at which such data is sold should be set by the market as well. Nasdaq Depth data is precisely the sort of market data product that the Commission envisioned when it adopted Regulation NMS.

On July 21, 2010, President Barack Obama signed into law H.R. 4173, the Dodd-Frank Wall Street Reform and Consumer Protection Act of 2010 (''Dodd-Frank Act''), which amended Section 19 of the Act. Among other things, Section 916 of the Dodd-Frank Act amended paragraph (A) of Section 19(b)(3) of the Act by inserting the phrase ''on any person, whether or not the person is a member of the self-regulatory organization'' after ''due, fee or other charge imposed by the self-regulatory organization.'' As a result, all SRO rule proposals establishing or changing dues, fees, or other charges are immediately effective upon filing regardless of whether such dues, fees, or other charges are imposed on members of the SRO, non-members, or both. Section 916 further amended paragraph (C) of Section 19(b)(3) of the Exchange Act to read, in pertinent part, ''At any time within the 60-day period beginning on the date of filing of such a proposed rule change in accordance with the provisions of paragraph (1) [of Section 19(b)], the Commission summarily may temporarily suspend the change in the rules of the self-regulatory organization made thereby, if it appears to the Commission that such action is necessary or appropriate in the public interest, for the protection of investors, or otherwise in furtherance of the purposes of this title. If the Commission takes such action, the Commission shall institute proceedings under paragraph (2)(B) [of Section 19(b)] to determine whether the proposed rule should be approved or disapproved.''

Nasdaq believes that these amendments to Section 19 of the Act reflect Congress' intent to allow the Commission to rely upon the forces of competition to ensure that fees for market data are reasonable and equitably allocated. Although Section 19(b) had formerly authorized immediate effectiveness for a ''due, fee or other charge imposed by the self-regulatory organization,'' the Commission adopted a policy and subsequently a rule stipulating that fees for data and other products available to persons that are not members of the self-regulatory organization must be approved by the Commission after first being published for comment. At the time, the Commission supported the adoption of the policy and the rule by pointing out that unlike members, whose representation in self-regulatory organization governance was mandated by the Act, non-members should be given the opportunity to comment on fees before being required to pay them, and that the Commission should specifically approve all such fees. Nasdaq believes that the amendment to Section 19 reflects Congress' conclusion that the evolution of self-regulatory organization governance and competitive market structure have rendered the Commission's prior policy on non-member fees obsolete. Specifically, many exchanges have evolved from member-owned not-for-profit corporations into for-profit investor-owned corporations (or subsidiaries of investor-owned corporations). Accordingly, exchanges no longer have narrow incentives to manage their affairs for the exclusive benefit of their members, but rather have incentives to maximize the appeal of their products to all customers, whether members or non-members, so as to broaden distribution and grow revenues. Moreover, we believe that the change also reflects an endorsement of the Commission's determinations that reliance on competitive markets is an appropriate means to ensure equitable and reasonable prices. Simply put, the change reflects a presumption that all fee changes should be permitted to take effect immediately, since the level of all fees are constrained by competitive forces.

The decision of the United States Court of Appeals for the District of Columbia Circuit in *NetCoaliton* v. *SEC,* No. 09–1042 (D.C. Cir. 2010), although reviewing a Commission decision made prior to the effective date of the Dodd-Frank Act, upheld the Commission's reliance upon competitive markets to set reasonable and equitably allocated fees for market data. ''In fact, the legislative history indicates that the Congress intended that the market system 'evolve through the interplay of competitive forces as unnecessary regulatory restrictions are removed' and that the SEC wield its regulatory power 'in those situations where competition may not be sufficient,' such as in the creation of a 'consolidated transactional reporting system.' *NetCoaltion,* at 15 (quoting H.R. Rep. No. 94–229, at 92 (1975), *as reprinted in* 1975 U.S.C.C.A.N. 321, 323). The court's conclusions about Congressional intent are therefore reinforced by the Dodd-Frank Act amendments, which create a presumption that exchange fees, including market data fees, may take effect immediately, without prior Commission approval, and that the Commission should take action to suspend a fee change and institute a proceeding to determine whether the fee change should be approved or disapproved only where the Commission has concerns that the change may not be consistent with the Act.

For the reasons stated above, Nasdaq believes that the proposed fees are fair and equitable, and not unreasonably discriminatory. As described above, the proposed fees are based on pricing conventions and distinctions that exist in Nasdaq's current fee schedule, and the fee schedules of other exchanges. These distinctions (*e.g.,* internal versus external distribution and hardware-based versus software-based system for delivering Nasdaq Depth data) are based on principles of fairness and equity that have helped for many years to maintain fair, equitable, and not unreasonably discriminatory fees, and that apply with equal or greater force to the current proposal. The Distributor and Administration fees for the optional hardware-based delivery of Nasdaq Depth data are based on careful analysis of empirical data and the application of time-tested pricing principles already accepted by the Commission for many years.

As described in greater detail below, if Nasdaq has calculated improperly and the market deems the proposed fees to be unfair, inequitable, or unreasonably discriminatory, firms can diminish or discontinue the use of their data because the proposed fee is entirely optional to all parties. Firms are not required to purchase Nasdaq Depth data or to utilize any specific pricing alternative if they do choose to purchase Nasdaq Depth data. Nasdaq is not required to make depth data available or to offer specific pricing alternatives for potential purchases. Nasdaq can discontinue offering a pricing alternative (as it has in the past) and firms can discontinue their use at any time and for any reason (as they often do), including due to their assessment of the reasonableness of fees charged. Nasdaq continues to create new pricing policies aimed at increasing fairness and equitable allocation of fees among users, and Nasdaq believes this is another useful step in that direction.

B. Self-Regulatory Organization's Statement on Burden on Competition

Nasdaq does not believe that the proposed rule change will result in any burden on competition that is not

necessary or appropriate in furtherance of the purposes of the Act, as amended. Notwithstanding its determination that the Commission may rely upon competition to establish fair and equitably allocated fees for market data, the *NetCoaltion* court found that the Commission had not, in that case, compiled a record that adequately supported its conclusion that the market for the data at issue in the case was competitive. For the reasons discussed above, Nasdaq believes that the Dodd-Frank Act amendments to Section 19 materially alter the scope of the Commission's review of future market data filings, by creating a presumption that all fees may take effect immediately, without prior analysis by the Commission of the competitive environment. Even in the absence of this important statutory change, however, Nasdaq believes that a record may readily be established to demonstrate the competitive nature of the market in question.

There is intense competition between trading platforms that provide transaction execution and routing services and proprietary data products. Transaction execution and proprietary data products are complementary in that market data is both an input and a byproduct of the execution service. In fact, market data and trade execution are a paradigmatic example of joint products with joint costs. The decision whether and on which platform to post an order will depend on the attributes of the platform where the order can be posted, including the execution fees, data quality and price and distribution of its data products. Without the prospect of a taking order seeing and reacting to a posted order on a particular platform, the posting of the order would accomplish little. Without trade executions, exchange data products cannot exist. Data products are valuable to many end users only insofar as they provide information that end users expect will assist them or their customers in making trading decisions.

The costs of producing market data include not only the costs of the data distribution infrastructure, but also the costs of designing, maintaining, and operating the exchange's transaction execution platform and the cost of regulating the exchange to ensure its fair operation and to maintain investor confidence. The total return that a trading platform earns reflects the revenues it receives from both products and the joint costs it incurs. Moreover, an exchange's customers view the costs of transaction executions and of data as a unified cost of doing business with the exchange. A broker-dealer will direct orders to a particular exchange only if the expected revenues from executing trades on the exchange exceed net transaction execution costs and the cost of data that the broker-dealer chooses to buy to support its trading decisions (or those of its customers). The choice of data products is, in turn, a product of the value of the products in making profitable trading decisions. If the cost of the product exceeds its expected value, the broker-dealer will choose not to buy it. Moreover, as a broker-dealer chooses to direct fewer orders to a particular exchange, the value of the product to that broker-dealer decreases, for two reasons. First, the product will contain less information, because executions of the broker-dealer's orders will not be reflected in it. Second, and perhaps more important, the product will be less valuable to that broker-dealer because it does not provide information about the venue to which it is directing its orders. Data from the competing venue to which the broker-dealer is directing orders will become correspondingly more valuable.

Thus, a super-competitive increase in the fees charged for either transactions or data has the potential to impair revenues from both products. ''No one disputes that competition for order flow is 'fierce'.'' *NetCoalition* at 24. However, the existence of fierce competition for order flow implies a high degree of price sensitivity on the part of broker-dealers with order flow, since they may readily reduce costs by directing orders toward the lowest-cost trading venues. A broker-dealer that shifted its order flow from one platform to another in response to order execution price differentials would both reduce the value of that platform's market data and reduce its own need to consume data from the disfavored platform. Similarly, if a platform increases its market data fees, the change will affect the overall cost of doing business with the platform, and affected broker-dealers will assess whether they can lower their trading costs by directing orders elsewhere and thereby lessening the need for the more expensive data.

Analyzing the cost of market data distribution in isolation from the cost of all of the inputs supporting the creation of market data will inevitably underestimate the cost of the data. Thus, because it is impossible to create data without a fast, technologically robust, and well-regulated execution system, system costs and regulatory costs affect the price of market data. It would be equally misleading, however, to attribute all of the exchange's costs to the market data portion of an exchange's joint product. Rather, all of the exchange's costs are incurred for the unified purposes of attracting order flow, executing and/or routing orders, and generating and selling data about market activity. The total return that an exchange earns reflects the revenues it receives from the joint products and the total costs of the joint products.

Competition among trading platforms can be expected to constrain the aggregate return each platform earns from the sale of its joint products, but different platforms may choose from a range of possible, and equally reasonable, pricing strategies as the means of recovering total costs. For example, some platform may choose to pay rebates to attract orders, charge relatively low prices for market information (or provide information free of charge) and charge relatively high prices for accessing posted liquidity. Other platforms may choose a strategy of paying lower rebates (or no rebates) to attract orders, setting relatively high prices for market information, and setting relatively low prices for accessing posted liquidity. In this environment, there is no economic basis for regulating maximum prices for one of the joint products in an industry in which suppliers face competitive constraints with regard to the joint offering. This would be akin to strictly regulating the price that an automobile manufacturer can charge for car sound systems despite the existence of a highly competitive market for cars and the availability of after-market alternatives to the manufacturer-supplied system.

The market for market data products is competitive and inherently contestable because there is fierce competition for the inputs necessary to the creation of proprietary data and strict pricing discipline for the proprietary products themselves. Numerous exchanges compete with each other for listings, trades, and market data itself, providing virtually limitless opportunities for entrepreneurs who wish to produce and distribute their own market data. This proprietary data is produced by each individual exchange, as well as other entities, in a vigorously competitive market.

Broker-dealers currently have numerous alternative venues for their order flow, including ten self-regulatory organization (''SRO'') markets, as well as internalizing broker-dealers (''BDs'') and various forms of alternative trading systems (''ATSs''), including dark pools and electronic communication networks (''ECNs''). Each SRO market competes to produce transaction reports via trade executions, and two FINRA-regulated Trade Reporting Facilities (''TRFs'') compete to attract internalized

transaction reports. Competitive markets for order flow, executions, and transaction reports provide pricing discipline for the inputs of proprietary data products.

The large number of SROs, TRFs, BDs, and ATSs that currently produce proprietary data or are currently capable of producing it provides further pricing discipline for proprietary data products. Each SRO, TRF, ATS, and BD is currently permitted to produce proprietary data products, and many currently do or have announced plans to do so, including Nasdaq, NYSE, NYSE Amex, NYSEArca, and BATS.

Any ATS or BD can combine with any other ATS, BD, or multiple ATSs or BDs to produce joint proprietary data products. Additionally, order routers and market data vendors can facilitate single or multiple broker-dealers' production of proprietary data products. The potential sources of proprietary products are virtually limitless.

The fact that proprietary data from ATSs, BDs, and vendors can by-pass SROs is significant in two respects. First, non-SROs can compete directly with SROs for the production and sale of proprietary data products, as BATS and Arca did before registering as exchanges by publishing proprietary book data on the Internet. Second, because a single order or transaction report can appear in an SRO proprietary product, a non-SRO proprietary product, or both, the data available in proprietary products is exponentially greater than the actual number of orders and transaction reports that exist in the marketplace.

Market data vendors provide another form of price discipline for proprietary data products because they control the primary means of access to end users. Vendors impose price restraints based upon their business models. For example, vendors such as Bloomberg and Thomson Reuters that assess a surcharge on data they sell may refuse to offer proprietary products that end users will not purchase in sufficient numbers. Internet portals, such as Google, impose a discipline by providing only data that will enable them to attract ''eyeballs'' that contribute to their advertising revenue. Retail broker-dealers, such as Schwab and Fidelity, offer their customers proprietary data only if it promotes trading and generates sufficient commission revenue. Although the business models may differ, these vendors' pricing discipline is the same: They can simply refuse to purchase any proprietary data product that fails to provide sufficient value. Nasdaq and other producers of proprietary data products must understand and respond to these varying business models and pricing disciplines in order to market proprietary data products successfully.

In addition to the competition and price discipline described above, the market for proprietary data products is also highly contestable because market entry is rapid, inexpensive, and profitable. The history of electronic trading is replete with examples of entrants that swiftly grew into some of the largest electronic trading platforms and proprietary data producers: Archipelago, Bloomberg Tradebook, Island, RediBook, Attain, TracECN, BATS Trading and Direct Edge. A proliferation of dark pools and other ATSs operate profitably with fragmentary shares of consolidated market volume.

Regulation NMS, by deregulating the market for proprietary data, has increased the contestability of that market. While broker-dealers have previously published their proprietary data individually, Regulation NMS encourages market data vendors and broker-dealers to produce proprietary products cooperatively in a manner never before possible. Multiple market data vendors already have the capability to aggregate data and disseminate it on a profitable scale, including Bloomberg, and Thomson Reuters.

The court in *NetCoalition* concluded that the Commission had failed to demonstrate that the market for market data was competitive based on the reasoning of the Commission's *NetCoalition* order because, in the court's view, the Commission had not adequately demonstrated that the depth-of-book data at issue in the case is used to attract order flow. Nasdaq believes, however, that evidence not before the court clearly demonstrates that availability of data attracts order flow. For example, as of July 2010, 92 of the top 100 broker-dealers by shares executed on Nasdaq consumed Level 2/NQDS and 80 of the top 100 broker-dealers consumed TotalView. During that month, the Level 2/NQDS-users were responsible for 94.44% of the orders entered into Nasdaq and TotalView users were responsible for 92.98%.

Competition among platforms has driven Nasdaq continually to improve its platform data offerings and to cater to customers' data needs. For example, Nasdaq has developed and maintained multiple delivery mechanisms (IP, multi-cast, and compression) that enable customers to receive data in the form and manner they prefer and at the lowest cost to them. Nasdaq offers front end applications such as its ''Bookviewer'' to help customers utilize data. Nasdaq has created new products like TotalView Aggregate to complement TotalView ITCH and Level 2/NQDS, because offering data in multiple formatting allows Nasdaq to better fit customer needs. Nasdaq offers data via multiple extranet providers, thereby helping to reduce network and total cost for its data products. Nasdaq has developed an online administrative system to provide customers transparency into their data feed requests and streamline data usage reporting. Nasdaq has also expanded its Enterprise License options that reduce the administrative burden and costs to firms that purchase market data.

Despite these enhancements and a dramatic increase in message traffic, Nasdaq's fees for market data have remained flat. In fact, as a percent of total customer costs, Nasdaq data fees have fallen relative to other data usage costs—including bandwidth, programming, and infrastructure—that have risen. The same holds true for execution services; despite numerous enhancements to Nasdaq's trading platform, absolute and relative trading costs have declined. Platform competition has intensified as new entrants have emerged, constraining prices for both executions and for data.

The vigor of competition for depth information is significant and the Exchange believes that this proposal clearly evidences such competition. Nasdaq is offering a new pricing model in order to keep pace with changes in the industry and evolving customer needs. It is entirely optional and is geared towards attracting new customers, as well as retaining existing customers.

The Exchange has witnessed competitors creating new products and innovative pricing in this space over the course of the past year. Nasdaq continues to see firms challenge its pricing on the basis of the Exchange's explicit fees being higher than the zero-priced fees from other competitors such as BATS. In all cases, firms make decisions on how much and what types of data to consume on the basis of the total cost of interacting with Nasdaq or other exchanges. Of course, the explicit data fees are but one factor in a total platform analysis. Some competitors have lower transactions fees and higher data fees, and others are vice versa. The market for this depth information is highly competitive and continually evolves as products develop and change.

C. Self-Regulatory Organization's Statement on Comments on the Proposed Rule Change Received From Members, Participants, or Others

No written comments were either solicited or received.

III. Date of Effectiveness of the Proposed Rule Change and Timing for Commission Action

Because the foregoing proposed rule change does not: (i) Significantly affect the protection of investors or the public interest; (ii) impose any significant burden on competition; and (iii) become operative for 30 days from the date on which it was filed, or such shorter time as the Commission may designate, it has become effective pursuant to Section 19(b)(3)(A) [7] of the Act and Rule 19b–4(f)(6)(iii) thereunder.[8]

At any time within 60 days of the filing of the proposed rule change, the Commission summarily may temporarily suspend such rule change if it appears to the Commission that such action is: (i) Necessary or appropriate in the public interest; (ii) for the protection of investors; or (iii) otherwise in furtherance of the purposes of the Act. If the Commission takes such action, the Commission shall institute proceedings to determine whether the proposed rule should be approved or disapproved.

IV. Solicitation of Comments

Interested persons are invited to submit written data, views, and arguments concerning the foregoing, including whether the proposed rule change is consistent with the Act. Comments may be submitted by any of the following methods:

Electronic Comments

- Use the Commission's Internet comment form (*http://www.sec.gov/rules/sro.shtml*); or
- Send an email to *rule-comments@sec.gov.* Please include File Number SR–NASDAQ–2012–063 on the subject line.

Paper Comments

- Send paper comments in triplicate to Elizabeth M. Murphy, Secretary, Securities and Exchange Commission, 100 F Street NE., Washington, DC 20549–1090.

All submissions should refer to File Number SR–NASDAQ–2012–063. This file number should be included on the subject line if email is used. To help the Commission process and review your comments more efficiently, please use only one method. The Commission will post all comments on the Commission's Internet Web site (*http://www.sec.gov/rules/sro.shtml*). Copies of the submission, all subsequent amendments, all written statements with respect to the proposed rule change that are filed with the Commission, and all written communications relating to the proposed rule change between the Commission and any person, other than those that may be withheld from the public in accordance with the provisions of 5 U.S.C. 552, will be available for Web site viewing and printing in the Commission's Public Reference Room, 100 F Street NE., Washington, DC 20549, on official business days between the hours of 10 a.m. and 3 p.m. Copies of such filing also will be available for inspection and copying at the principal offices of the Exchange. All comments received will be posted without change; the Commission does not edit personal identifying information from submissions. You should submit only information that you wish to make available publicly. All submissions should refer to File Number SR–NASDAQ–2012–063, and should be submitted on or before July 26, 2012.

For the Commission, by the Division of Trading and Markets, pursuant to delegated authority.[9]

Kevin M. O'Neill,

Deputy Secretary.

[FR Doc. 2012–16376 Filed 7–3–12; 8:45 am]

BILLING CODE 8011–01–P

[7] 15 U.S.C. 78s(b)(3)(A).

[8] 17 CFR 240.19b–4(f)(6)(iii). In addition, Rule 19b–4(f)(6) requires a self-regulatory organization to give the Commission written notice of its intent to file the proposed rule change at least five business days prior to the date of filing of the proposed rule change, or such shorter time as designated by the Commission. The Exchange has satisfied this requirement.

[9] 17 CFR 200.30–3(a)(12).

SECURITIES AND EXCHANGE COMMISSION

[Release No. 34–67296; File No. SR–C2–2012–019]

Self-Regulatory Organizations; C2 Options Exchange, Incorporated; Notice of Filing and Immediate Effectiveness of a Proposed Rule Change To Amend Rule 8.2 Regarding Market-Maker Registration Cost

June 28, 2012.

Pursuant to Section 19(b)(1) of the Securities Exchange Act of 1934 (the ''Act'') [1] and Rule 19b–4 thereunder,[2] notice is hereby given that, on June 15, 2012, C2 Options Exchange, Incorporated (the ''Exchange'' or ''C2'') filed with the Securities and Exchange Commission (the ''Commission'') the proposed rule change as described in Items I and II below, which Items have been prepared by the Exchange. The Commission is publishing this notice to solicit comments on the proposed rule change from interested persons.

I. Self-Regulatory Organization's Statement of the Terms of Substance of the Proposed Rule Change

C2 proposes to amend its Rule 8.2 regarding Market-Maker registration cost. The text of the proposed rule change is available on the Exchange's Web site (*http://www.c2exchange.com/Legal/*), at the Exchange's Office of the Secretary, and at the Commission' Public Reference Room.

II. Self-Regulatory Organization's Statement of the Purpose of, and Statutory Basis for, the Proposed Rule Change

In its filing with the Commission, the Exchange included statements concerning the purpose of and basis for the proposed rule change and discussed any comments it received on the proposed rule change. The text of those statements may be examined at the places specified in Item IV below. The Exchange has prepared summaries, set forth in sections A, B, and C below, of the most significant parts of such statements.

A. Self-Regulatory Organization's Statement of the Purpose of, and Statutory Basis for, the Proposed Rule Change

1. Purpose

The Exchange proposes to amend its Rule 8.2(d) regarding registration costs. An option class registration of a Market-Maker confers the right to quote in that product. Each Trading Permit held by a Market-Maker has a registration credit of 1.0. A Market-Maker may select for each Trading Permit the Market-Maker holds any combination of option classes, whose aggregate registration cost does not exceed 1.0. When the Exchange initially adopted language regarding registration costs, the Exchange designated every option traded on C2, except SPX, VIX, OEX, DJX, and XSP (the ''Excluded Products''), to have a registration cost of .001, and stated that, if C2 determines to commence trading of any of the Excluded Products, it will file a proposed rule change to adopt

[1] 15 U.S.C.78s(b)(1).

[2] 17 CFR 240.19b–4.

registration costs for those products.[3] The Exchange now intends to commence trading of XSP, and set a registration cost for Market-Makers to quote in XSP of .001 (the same registration cost as all other options traded on C2 (except SPXPM)[4]). As such, the Exchange proposes to amend Rule 8.2(d) to delete the language that excludes SPX, VIX, OEX, DJX and XSP from having a registration cost of .001. Going forward, the registration cost for XSP will be .001 (like every other option traded on C2 except for SPXPM). Currently, the Exchange has no plans to list any of the other Excluded Products, but if that were to change, the registration cost for those products would also be set at .001. If the Exchange were to permit trading of any of the Excluded Products and did not desire for the registration cost for one of those products to be .001, the Exchange would file a proposed rule change to adopt a different registration cost for such product (as would also be necessary under the current rules).

2. Statutory Basis

The Exchange believes the proposed rule change is consistent with the Act and the rules and regulations thereunder applicable to the Exchange and, in particular, the requirements of Section 6(b) of the Act.[5] Specifically, the Exchange believes the proposed rule change is consistent with the Section 6(b)(5)[6] requirements that the rules of an exchange be designed to promote just and equitable principles of trade, to prevent fraudulent and manipulative acts, to remove impediments to and to perfect the mechanism for a free and open market and a national market system, and, in general, to protect investors and the public interest. Establishing a registration cost of .001 for XSP as well as the other Excluded Products is reasonable because it is equal to the registration cost of all other products traded on C2 (except SPXPM).

B. Self-Regulatory Organization's Statement on Burden on Competition

C2 does not believe that the proposed rule change will impose any burden on competition that is not necessary or appropriate in furtherance of the purposes of the Act.

C. Self-Regulatory Organization's Statement on Comments on the Proposed Rule Change Received From Members, Participants, or Others

The Exchange neither solicited nor received comments on the proposed rule change.

III. Date of Effectiveness of the Proposed Rule Change and Timing for Commission Action

Because the foregoing proposed rule change does not: (i) Significantly affect the protection of investors or the public interest; (ii) impose any significant burden on competition; and (iii) become operative for 30 days after the date of the filing, or such shorter time as the Commission may designate, it has become effective pursuant to Section 19(b)(3)(A) of the Act[7] and Rule 19b–4(f)(6) thereunder.[8]

At any time within 60 days of the filing of the proposed rule change, the Commission summarily may temporarily suspend such rule change if it appears to the Commission that such action is necessary or appropriate in the public interest, for the protection of investors, or otherwise in furtherance of the purposes of the Act.

IV. Solicitation of Comments

Interested persons are invited to submit written data, views, and arguments concerning the foregoing, including whether the proposed rule change is consistent with the Act. Comments may be submitted by any of the following methods:

Electronic Comments

- Use the Commission's Internet comment form (*http://www.sec.gov/rules/sro.shtml*); or
- Send an email to *rule-comments@sec.gov.* Please include File Number SR–C2–2012–019 on the subject line.

Paper Comments

- Send paper comments in triplicate to Elizabeth M. Murphy, Secretary, Securities and Exchange Commission, 100 F Street NE., Washington, DC 20549–1090.

All submissions should refer to File Number SR–C2–2012–019. This file number should be included on the subject line if email is used. To help the Commission process and review your comments more efficiently, please use only one method. The Commission will post all comments on the Commission's Internet Web site (*http://www.sec.gov/rules/sro.shtml*). Copies of the submission, all subsequent amendments, all written statements with respect to the proposed rule change that are filed with the Commission, and all written communications relating to the proposed rule change between the Commission and any person, other than those that may be withheld from the public in accordance with the provisions of 5 U.S.C. 552, will be available for Web site viewing and printing in the Commission's Public Reference Room, 100 F Street NE., Washington, DC 20549, on official business days between the hours of 10 a.m. and 3 p.m. Copies of such filing also will be available for inspection and copying at the principal office of the Exchange. All comments received will be posted without change; the Commission does not edit personal identifying information from submissions. You should submit only information that you wish to make available publicly. All submissions should refer to File Number SR–C2–2012–019 and should be submitted on or before June 26, 2012.

For the Commission, by the Division of Trading and Markets, pursuant to delegated authority.[9]

Kevin M. O'Neill,

Deputy Secretary.

[FR Doc. 2012–16375 Filed 7–3–12; 8:45 am]

BILLING CODE 8011–01–P

[3] *See* Securities Exchange Act Release No. 63021 (September 30, 2010), 75 Fr 62159 (October 7, 2010) (SR–C2–2010–004).

[4] *See* C2 Rule 8.2(d) *and* Securities Exchange Act Release No. 65452 (September 30, 2011), 76 FR 62123 (October 6, 2011) (SR–C2–2011–023).

[5] 15 U.S.C. 78f(b).

[6] 15 U.S.C. 78f(b)(5).

[7] 15 U.S.C. 78s(b)(3)(A).

[8] 17 CFR 240.19b–4(f)(6). In addition, Rule 19b–4(f)(6) requires a self-regulatory organization to give the Commission written notice of its intent to file the proposed rule change at least five business days prior to the date of filing of the proposed rule change, or such shorter time as designated by the Commission. The Exchange has satisfied this requirement.

[9] 17 CFR 200.30–3(a)(12).

SECURITIES AND EXCHANGE COMMISSION

[Release No. 34–67295; File No. SR–NASDAQ–2012–061]

Self-Regulatory Organizations; The NASDAQ Stock Market LLC.; Order Approving a Proposed Rule Change for the NASDAQ Options Market To Accept Inbound Orders From NASDAQ OMX BX's New Options Market

June 28, 2012.

I. Introduction

On May 15, 2012, The NASDAQ Stock Market LLC (''Exchange'' or ''NASDAQ'') filed with the Securities and Exchange Commission (''Commission''), pursuant to Section 19(b)(1) of the Securities Exchange Act of 1934 (''Act'')[1] and Rule 19b–4

[1] 15 U.S.C. 78s(b)(1).

thereunder,[2] a proposed rule change for the NASDAQ Options Market (''NOM'') [3] to accept inbound options orders routed by NASDAQ Options Services LLC (''NOS'') from NASDAQ OMX BX (''BX'') on a one year pilot basis in connection with the establishment of a new options market by BX. The proposed rule change was published for comment in the **Federal Register** on May 24, 2012.[4] The Commission received no comment letters regarding the proposed rule change. This order approves the proposed rule change.

II. Background

NASDAQ Rule 2160(a) prohibits the Exchange or any entity with which it is affiliated from, directly or indirectly, acquiring or maintaining an ownership interest in, or engaging in a business venture with, a NASDAQ member or an affiliate of a NASDAQ member in the absence of an effective filing under Section 19(b) of the Act.[5] NOS is a registered broker-dealer that is a member of the Exchange, and currently provides to members of the Exchange optional routing services to other markets.[6] NOS is owned by NASDAQ OMX Group, Inc. (''NASDAQ OMX''), which also owns three registered securities exchanges—the Exchange, BX, and NASDAQ OMX PHLX LLC (''PHLX'').[7] Thus, NOS is an affiliate of these exchanges.[8] Absent an effective filing, NASDAQ Rule 2160(a) would prohibit NOS from being a member of the Exchange. The Commission initially approved NOS's affiliation with NASDAQ and its affiliated exchanges in connection with the establishment of NOM and NASDAQ OMX's acquisition of BX and PHLX,[9] and NOS currently performs certain limited activities for each.[10] With the current proposed rule change, the Exchange seeks approval to permit NOS to perform a new function.

On May 1, 2012, BX filed a proposed rule change to establish a new BX options market (''BX Options''), which will be an electronic trading system that trades options.[11] As part of its proposal, BX proposed that NOS provide BX with outbound options routing services to other markets, including its affiliate NASDAQ. On May 15, 2012, the Exchange filed the instant proposal to allow the Exchange to accept such options orders routed inbound by NOS from BX, on a one year pilot basis, subject to certain limitations and conditions.[12]

III. Discussion and Commission Findings

After careful review, the Commission finds that the proposed rule change is consistent with the requirements of the Act and the rules and regulations thereunder applicable to a national securities exchange.[13] Specifically, the Commission finds that the proposed rule change is consistent with Section 6(b)(1) of the Act,[14] which requires, among other things, that a national securities exchange be so organized and have the capacity to carry out the purposes of the Act, and to comply and enforce compliance by its members and persons associated with its members, with the provisions of the Act, the rules and regulation thereunder, and the rules of the Exchange. Further, the Commission finds that the proposed rule change is consistent with Section 6(b)(5) of the Act,[15] which requires, among other things, that the rules of a national securities exchange be designed to prevent fraudulent and manipulative acts and practices; to promote just and equitable principles of trade; to foster cooperation and coordination with persons engaged in regulating, clearing, settling, and processing information with respect to, and facilitating transactions in securities; to remove impediments to and perfect the mechanism of a free and open market and a national market system; and, in general, to protect investors and the public interest. Section 6(b)(5) also requires that the rules of an exchange not be designed to permit unfair discrimination among customers, issuers, brokers, or dealers.

NOS will operate as a facility of BX that provides outbound options routing from BX Options to other market centers, subject to certain conditions.[16] The operation of NOS as a facility of BX providing outbound routing services from BX Options will be subject to BX oversight, as well as Commission oversight. BX will be responsible for ensuring that NOS's outbound options routing service is operated consistent with Section 6 of the Act and BX rules. In addition, BX must file with the Commission rule changes and fees relating to BX's outbound options routing services.

Recognizing that the Commission has previously expressed concern regarding the potential for conflicts of interest in instances where a member firm is affiliated with an exchange of which it is a member, the Exchange previously proposed, and the Commission approved, limitations and conditions on NOS's affiliation with the Exchange.[17] Also recognizing that the Commission has previously expressed concern regarding the potential for conflicts of interest in instances where a member firm is affiliated with an exchange to which it is routing orders, the Exchange proposed the following limitations and conditions to NOS's affiliation with the Exchange to permit the Exchange to accept inbound options orders that NOS routes in its capacity as a facility of BX:[18]

- First, the Exchange and the Financial Industry Regulatory Authority (''FINRA'') will maintain a Regulatory Contract, as well as an agreement pursuant to Rule 17d–2 under the Act

[2] 17 CFR 240.19b–4.

[3] NOM is the Exchange's options trading facility.

[4] *See* Securities Exchange Act Release No. 67027 (May 18, 2012), 77 FR 31057 (''Notice'').

[5] 15 U.S.C. 78s(b). NASDAQ Rule 2160 also prohibits a NASDAQ member from being or becoming an affiliate of NASDAQ, or an affiliate of an entity affiliated with NASDAQ, in the absence of an effective filing under Section 19(b). *See* NASDAQ Rule 2160(b).

[6] *See* Notice, *supra* note 4, at 31057 n.4 and accompanying text.

[7] *See* Securities Exchange Act Release No. 58324 (August 7, 2008), 73 FR 46936 (August 12, 2008) (SR–BSE–2008–02; SR–BSE–2008–23; SR–BSE–2008–25; SR–BSECC–2008–01) (order approving NASDAQ OMX's acquisition of BX) (''BX Acquisition Order''); Securities Exchange Act Release No. 58179 (July 17, 2008), 73 FR 42874 (July 23, 2008) (SR–PHLX–2008–31) (order approving NASDAQ OMX's acquisition of PHLX) (''PHLX Acquisition Order'').

[8] *See id. See also* Notice, *supra* note 4, at 31058.

[9] *See* Securities Exchange Act Release No. 57478 (March 12, 2008), 73 FR 14521, 14532–14533 (March 18, 2008) (SR–NASDAQ–2007–004 and SR–NASDAQ–2007–080) (''NOM Approval Order''); BX Acquisition Order, *supra* note 7, at 46944; and PHLX Acquisition Order, *supra* note 7, at 42877.

[10] *See, e.g.,* NASDAQ Options Rule Chapter VI, Section 11(e) (governing order routing on NOM); and Securities Exchange Act Release No. 59948 (May 20, 2009), 74 FR 25784 (May 29, 2009) (SR–NASDAQ–2009–047) (relating to the routing of orders by NOS inbound to NOM from PHLX) (''PHLX Inbound Release'').

[11] *See* Securities Exchange Act Release No. 66983 (May 14, 2012), 77 FR 29730 (May 18, 2012) (SR–BX–2012–030) (notice of propose rule change to adopt rules for the new BX options market) (''BX Options Proposal'').

On June 26, 2012, the Commission approved the BX Options Proposal. *See* Securities Exchange Act Release No. 67256 (June 26, 2012) (''BX Options Approval'').

[12] *See* Notice, *supra* note 4.

[13] In approving this proposed rule change, the Commission has considered the proposed rule's impact on efficiency, competition and capital formation. 15 U.S.C. 78c(f).

[14] 15 U.S.C. 78f(b)(1).

[15] 15 U.S.C. 78f(b)(5).

[16] *See* BX Options Approval, *supra* note 7, at Section II.D.

[17] *See* NOM Approval Order, *supra* note 9, at 14521. *See also* Notice, *supra* note 4, at 31058 n.9 and accompanying text. In addition, the Exchange has authority to accept inbound orders that NOS routes in its capacity as a facility of PHLX, subject to certain limitations and conditions. *See* PHLX Inbound Release, *supra* note 10, at 25784. *See also* Notice, *supra* note 4, at 31058 n.10 and accompanying text.

[18] *See* Notice, *supra* note 4, at 31058.

(''17d–2 Agreement'').[19] Pursuant to the Regulatory Contract and the 17d–2 Agreement, FINRA will be allocated regulatory responsibilities to review NOS's compliance with certain Exchange rules.[20] Pursuant to the Regulatory Contract, however, the Exchange retains ultimate responsibility for enforcing its rules with respect to NOS.

- Second, FINRA will monitor NOS for compliance with the Exchange's trading rules, and will collect and maintain certain related information.[21]
- Third, FINRA will provide a report to the Exchange's chief regulatory officer (''CRO''), on a quarterly basis, that: (i) Quantifies all alerts (of which the Exchange or FINRA is aware) that identify NOS as a participant that has potentially violated Commission or Exchange rules, and (ii) lists all investigations that identify NOS as a participant that has potentially violated Commission or Exchange rules.
- Fourth, the Exchange is amending NASDAQ Rule 2160(c) to require NASDAQ OMX, as the holding company owning both the Exchange and NOS, to establish and maintain procedures and internal controls reasonably designed to ensure that NOS does not develop or implement changes to its system, based on non-public information obtained regarding planned changes to the Exchange's systems as a result of its affiliation with the Exchange, until such information is available generally to similarly situated Exchange members, in connection with the provision of inbound options order routing to the Exchange.[22]
- Fifth, the Exchange proposes that the routing of options orders from NOS to the Exchange, in NOS's capacity as a facility of BX, be authorized for a pilot period of one year.

In the past, the Commission has expressed concern that the affiliation of an exchange with one of its members raises potential conflicts of interest, and the potential for unfair competitive advantage.[23] Although the Commission continues to be concerned about potential unfair competition and conflicts of interest between an exchange's self-regulatory obligations and its commercial interest when the exchange is affiliated with one of its members, for the reasons discussed below, the Commission believes that it is consistent with the Act to permit NOS, in its capacity as a facility of BX, to route options orders inbound to the Exchange on a pilot basis, subject to the limitations and conditions described above.[24]

The Commission believes that these limitations and conditions enumerated above will mitigate its concerns about potential conflicts of interest and unfair competitive advantage. In particular, the Commission believes that a non-affiliated SRO's oversight of NOS,[25] combined with a non-affiliated SRO's monitoring of NOS's compliance with the Exchange's rules and quarterly reporting to the Exchange, will help to protect the independence of the Exchange's regulatory responsibilities with respect to NOS. The Commission also believes that the Exchange's proposed amendments to NASDAQ Rule 2160(c) are designed to ensure that NOS cannot use any information advantage it may have because of its affiliation with the Exchange. Furthermore, the Commission believes that the Exchange's proposal to allow NOS to route options orders inbound to the Exchange from BX, on a pilot basis, will provide the Exchange and the Commission an opportunity to assess the impact of any conflicts of interest of allowing an affiliated member of the Exchange to route orders inbound to the Exchange and whether such affiliation provides an unfair competitive advantage.

IV. Conclusion

It is therefore ordered, pursuant to Section 19(b)(2) of the Act,[26] that the proposed rule change (SR–NASDAQ–2012–061) be, and hereby is, approved.

For the Commission, by the Division of Trading and Markets, pursuant to delegated authority.[27]

Kevin M. O'Neill,

Deputy Secretary.

[FR Doc. 2012–16374 Filed 7–3–12; 8:45 am]

BILLING CODE 8011–01–P

[19] 17 CFR 240.17d–2.

[20] NOS is also subject to independent oversight by FINRA, its designated examining authority, for compliance with financial responsibility requirements.

[21] Pursuant to the Regulatory Contract, both FINRA and the Exchange will collect and maintain all alerts, complaints, investigations and enforcement actions in which NOS (in its capacity as a facility of BX routing orders to the Exchange) is identified as a participant that has potentially violated applicable Commission or Exchange rules. The Exchange and FINRA will retain these records in an easily accessible manner in order to facilitate any potential review conducted by the Commission's Office of Compliance Inspections and Examinations. *See* Notice, *supra* note 4, at 31058 n.14.

[22] The Commission notes that prior to this proposed rule change, NASDAQ Rule 2160(c) only applied with respect to the Exchange's equity order routing facility, NASDAQ Execution Services LLC. As a result of this proposed rule change, NASDAQ Rule 2160(c) will be applicable to NOS.

[23] *See, e.g.,* Securities Exchange Act Release Nos. 54170 (July 18, 2006), 71 FR 42149 (July 25, 2006) (SR–NASDAQ–2006–006) (order approving NASDAQ's proposal to adopt NASDAQ Rule 2140, restricting affiliations between NASDAQ and its members); 53382 (February 27, 2006), 71 FR 11251 (March 6, 2006) (SR–NYSE–2005–77) (order approving the combination of the New York Stock Exchange, Inc. and Archipelago Holdings, Inc.); 58673 (September 29, 2008), 73 FR 57707 (October 3, 2008) (SR–Amex–2008–62 and SR–NYSE–2008–60) (order approving the combination of NYSE Euronext and the American Stock Exchange LLC); 59135 (December 22, 2008), 73 FR 79954 (December 30, 2008) (SR–ISE–2009–85) (order approving the purchase by ISE Holdings of an ownership interest in Direct Edge Holdings LLC); 59281 (January 22, 2009), 74 FR 5014 (January 28, 2009) (SR–NYSE–2008–120) (order approving a joint venture between NYSE and BIDS Holdings L.P.); 58375 (August 18, 2008), 73 FR 49498 (August 21, 2008) (File No. 10–182) (order granting the exchange registration of BATS Exchange, Inc.); 61698 (March 12, 2010), 75 FR 13151 (March 18, 2010) (File Nos. 10–194 and 10–196) (order granting the exchange registration of EDGX Exchange, Inc. and EDGA Exchange, Inc.); and 62716 (August 13, 2010), 75 FR 51295 (August 19, 2010) (File No. 10–198) (order granting the exchange registration of BATS–Y Exchange, Inc.).

[24] The Commission notes that these limitations and conditions are consistent with those previously approved by the Commission for other exchanges. *See, e.g.,* BX Options Approval, *supra* note 11, at II.D.2.

[25] This oversight will be accomplished through the 17d–2 Agreement between FINRA and the Exchange and the Regulatory Contract. *See* Notice, *supra* note 4, at 31058 n.12 and accompanying text.

[26] 15 U.S.C. 78s(b)(2).

[27] 17 CFR 200.30–3(a)(12).

SECURITIES AND EXCHANGE COMMISSION

[Release No. 34–67289; File No. SR–ICC–2012–04]

Self-Regulatory Organizations; ICE Clear Credit LLC; Order Approving Proposed Rule Change To Add Rules Related to the Clearing of Emerging Markets Sovereign Index CDS

June 28, 2012.

I. Introduction

On April 3, 2012, ICE Clear Credit LLC (''ICC'') filed with the Securities and Exchange Commission (''Commission'') the proposed rule change (SR–ICC–2012–04) pursuant to Section 19(b)(1) of the Securities Exchange Act of 1934 (''Act'')[1] and Rule 19b–4 thereunder.[2] The proposed rule change was published for comment in the **Federal Register** on April 16, 2012.[3] On May 29, 2012, the Commission extended the time within which to take action of the proposed rule change to July 13, 2012.[4] The Commission received no comment letters regarding the proposal. For the reasons discussed

[1] 15 U.S.C. 78s(b)(1).

[2] 17 CFR 240.19b–4.

[3] Securities Exchange Act Release No. 66777 (April 10, 2012), 77 FR 22623 (April 16, 2012).

[4] Securities Exchange Act Release No. 67070 (May 29, 2012), 77 FR 33013 (June 4, 2012).

below, the Commission is granting approval of the proposed rule change.

II. Description

This rule change will amend Chapter 26 of ICC's rules to add Section 26C to provide for the clearance of the CDX Emerging Markets CDS contracts (''CDX.EM Contracts''), which reference an emerging market sovereign index. ICC will list the five year tenor of Series 14, 15, 16 and 17 of the CDX.EM Contracts.

CDX.EM Contracts have similar terms to the CDX North American Index CDS contracts (''CDX.NA Contracts'') currently cleared by ICC and governed by Section 26A of the ICC rules. Accordingly, the proposed rules found in Section 26C largely mirror the ICC rules for CDX.NA Contracts in Section 26A, with certain modifications that reflect the underlying reference entities (sovereign reference entities instead of corporate reference entities) and differences in terms and market conventions between CDX.EM Contracts and CDX.NA Contracts. The CDX.EM Contracts reference the CDX.EM index, the current series of which consists of 15 emerging market sovereign entities: Argentina, Venezuela, Brazil, Malaysia, Colombia, Hungary, Indonesia, Panama, Peru, South Africa, the Philippines, Turkey, Russia, Ukraine, and Mexico. CDX.EM Contracts, consistent with market convention and widely used standard terms documentation, can be triggered by credit events for failure to pay, restructuring, and repudiation/moratorium (by contrast to the credit events of failure to pay and bankruptcy applicable to the CDX.NA Contracts). CDX.EM Contracts will only be denominated in U.S. dollars.

ICC Rule 26C–102 (Definitions) sets forth the definition ICC uses for its CDX.EM Contract rules. An ''Eligible CDX.EM Untranched Index'' is defined as ''each particular series and version of a CDX.EM index or sub-index, as published by the CDX.EM Untranched Publisher, included from time to time in the List of Eligible CDX.EM Untranched Indexes,'' which is a list maintained, updated, and published from time to time by the ICC board of directors or its designee, containing certain specified information with respect to each index. ''CDX.EM Untranched Terms Supplement'' refers to the market standard form of documentation used for credit default swaps on the CDX.EM index, which is incorporated by reference into the contract specifications in Section 26C. The remaining definitions are substantially the same as the definitions found in Section 26A of the ICC rules, other than certain conforming changes.

Rules 26C–309 (Acceptance of CDX.EM Untranched Contract), 26C–315 (Terms of the Cleared CDX.EM Untranched Contract), and 26C–316 (Updating Index Version of Fungible Contracts After a Credit Event or a Succession Event; Updating Relevant Untranched Standard Terms Supplement) reflect or incorporate the basic contract specifications for CDX.EM Contracts and are substantially the same as under Section 26A of the ICC rulebook for CDX.NA Contracts. In addition to various non-substantive conforming changes, proposed Rule 26C–317 (Terms of CDX.EM Untranched Contracts) differs from the corresponding Rule 26A–317 to reflect the fact that restructuring and repudiation/moratorium are credit events for the CDX.EM Contract.

In addition, a conforming change is being made to the definition of ''Restructuring CDS Contract'' in Section 26E (CDS Restructuring Rules) to address components of CDX.EM Contracts that become subject to a restructuring credit event. The treatment of such restructuring credit events for CDX.EM Contracts will thus be as set forth in existing Section 26E of the ICC rules.

III. Discussion

Section 19(b)(2)(B) of the Act directs the Commission to approve a proposed rule change of a self-regulatory organization if it finds that such proposed rule change is consistent with the requirements of the Act and the rules and regulations thereunder applicable to such organization.[5] After careful review, the Commission finds that the proposed rule change is consistent with the requirements of the Act and the rules and regulations thereunder applicable to a registered clearing agency. Given the particular characteristics of the products proposed to be cleared, the Commission carefully considered ICC's ability to clear the CDX.EM Contracts in a manner that assures the safeguarding of securities and funds which are in the custody and control of ICC or for which ICC is responsible. After considering the representations made by ICC regarding its belief that it would clear CDX.EM Contracts in a manner that assures the safeguarding of securities and funds, the Commission finds that the proposed rule change is consistent with the requirements of the Act and the rules and regulations thereunder.

IV. Conclusion

On the basis of the foregoing, the Commission finds that the proposal is consistent with the requirements of the Act and in particular with the requirements of Section 17A of the Act[6] and the rules and regulations thereunder.

It is therefore ordered, pursuant to Section 19(b)(2) of the Act,[7] that the proposed rule change (File No. SR–ICC–2012–04) be, and hereby is, approved.[8]

For the Commission, by the Division of Trading and Markets, pursuant to delegated authority.[9]

Kevin M. O'Neill,

Deputy Secretary.

[FR Doc. 2012–16371 Filed 7–3–12; 8:45 am]

BILLING CODE 8011–01–P

[5] 15 U.S.C. 78s(b)(2)(B). For example, Section 17A(b)(3)(F) of the Act requires, among other things, that the rules of a clearing agency be designed to assure the safeguarding of securities and funds in the custody or control of the clearing agency or for which the clearing agency is responsible. 15 U.S.C. 78q-1(b)(3)(F). Though the CDX.EM Contracts are not themselves securities, the safety and soundness of the product directly impacts ICC's ability to safeguard securities and funds in its custody or control or for which it is responsible.

[6] 15 U.S.C. 78q–1.

[7] 15 U.S.C. 78s(b)(2).

[8] In approving the proposed rule change, the Commission considered the proposal's impact on efficiency, competition and capital formation. 15 U.S.C. 78c(f).

[9] 17 CFR 200.30–3(a)(12).

SECURITIES AND EXCHANGE COMMISSION

[Release No. 34–67321; File No. SR–NYSEMKT–2012–16]

Self-Regulatory Organizations; NYSE MKT LLC; Notice of Filing and Immediate Effectiveness of Proposed Rule Change Amending the NYSE Amex Options Fee Schedule To Increase the Monthly Fee per Amex Trading Permit for Order Flow Providers and Clearing Members and Make a Conforming Change to the Current Text in the Fee Schedule

June 29, 2012.

Pursuant to Section 19(b)(1) of the Securities Exchange Act of 1934 (''Act''),[1] and Rule 19b–4 thereunder,[2] notice is hereby given that on June 27, 2012, NYSE MKT LLC (the ''Exchange'' or ''NYSE MKT'') filed with the Securities and Exchange Commission (''Commission'') the proposed rule change as described in Items I, II and III below, which Items have been prepared by the self-regulatory organization. The Commission is publishing this notice to

[1] 15 U.S.C. 78s(b)(1).

[2] 17 CFR 240.19b–4.

solicit comments on the proposed rule change from interested persons.

I. Self-Regulatory Organization's Statement of the Terms of Substance of the Proposed Rule Change

The Exchange proposes to amend the NYSE Amex Options Fee Schedule (the ''Fee Schedule'') to increase the monthly fee per Amex Trading Permit (''ATP'') for Order Flow Providers and Clearing Members and to make a conforming change to the current text in the Fee Schedule. The proposed change will be operative on July 1, 2012. The text of the proposed rule change is available on the Exchange's Web site at *www.nyse.com,* at the principal office of the Exchange, and at the Commission's Public Reference Room.

II. Self-Regulatory Organization's Statement of the Purpose of, and Statutory Basis for, the Proposed Rule Change

In its filing with the Commission, the self-regulatory organization included statements concerning the purpose of, and basis for, the proposed rule change and discussed any comments it received on the proposed rule change. The text of those statements may be examined at the places specified in Item IV below. The Exchange has prepared summaries, set forth in sections A, B, and C below, of the most significant parts of such statements.

A. Self-Regulatory Organization's Statement of the Purpose of, and Statutory Basis for, the Proposed Rule Change

1. Purpose

The Exchange proposes to amend the Fee Schedule to increase the monthly fee per ATP for Order Flow Providers and Clearing Members and to make a conforming change to the current text in the Fee Schedule. Specifically, the Exchange proposes to increase the fee per ATP for Order Flow Providers and Clearing Members from $500 per month to $1,000 per month. The Exchange does not propose to increase the monthly fee per ATP for Floor Brokers. The Exchange believes that the proposed rule change is warranted because volume on the Exchange has increased and the ATP fees for these participants have not changed since March 2009.[3] Since March 2009, the Exchange's market share has increased from approximately 5% to 15%. The Exchange notes that the proposed fee will fall within the range of fees charged by at least one other exchange.[4]

The Exchange also proposes to make conforming changes to the text of the Fee Schedule. Presently, the Fee Schedule refers to ''Order Routing'' and ''Clearing Firms'' in the context of the ATP fees charged on a monthly basis for a participant acting in either capacity. The Exchange proposes to change Clearing Firm to Clearing Member and Order Routing to Order Flow Provider because Clearing Firm and Order Routing are not defined terms in the rules of the Exchange.[5] The Exchange is making this change in order to reduce any potential confusion regarding which fee applies.

2. Statutory Basis

The Exchange believes that the proposed rule change is consistent with the provisions of Section 6(b)[6] of the Securities Exchange Act of 1934 (the ''Act''), in general, and Section 6(b)(4)[7] of the Act, in particular, in that it is designed to provide for the equitable allocation of reasonable dues, fees, and other charges among its members and other persons using its facilities. The Exchange believes that the proposed increase in ATP fees for participants acting as Order Flow Providers or Clearing Members is reasonable and equitable given the large increase in volume since the fees were established in March 2009. In addition, the fee increase from $500 to $1,000 per month is reasonable in light of the Exchange's increase in market share during the same time period, from approximately 5% in March 2009 to approximately 15% presently. The proposed rule change is equitable in that other participants have previously experienced fee increases during the same time period. For example, the ATP fee for NYSE Amex Options Market Makers was increased from $1,000 per month to $5,000 per month.[8] In addition, the proposed fee increase is reasonable because it is comparable to fees offered on at least one another exchange.[9]

The Exchange notes that it is leaving the monthly ATP fee for Floor Brokers at $500 per month. The Exchange believes this is both reasonable and equitable given the following. First, ATP Holders conducting a floor brokerage business are required to purchase an ATP for each Floor Broker that is engaged in business on the floor of the Exchange. In practice, such firms typically have more than one ATP to ensure adequate coverage on the trading floor (i.e., a single Floor Broker cannot be physically present in several trading crowds at the same time). As a result, ATP Holders conducting a floor brokerage business typically pay more in ATP fees than either Order Flow Providers or Clearing Members by virtue of the requirement that they have an ATP for each Floor Broker on the floor in their employ. By contrast, an Order Flow Provider sending agency orders to the Exchange for execution, either electronically or via phone for a Floor Broker to execute, need only purchase a single ATP each month to conduct their business. Similarly, a Clearing Member, sending orders to the Exchange electronically or utilizing a Floor Broker to represent their orders also is only required to purchase a single ATP to conduct their business. Further, while the Exchange has seen increases in volume and market share, the amount of open outcry volume has remained steady over time and as a result has actually decreased as a percentage of overall Exchange volume. Consequently, Floor Brokers and other on floor participants may have not benefited from the overall increase in Exchange volumes and market share as have other participants.

The Exchange believes the proposed change is not unfairly discriminatory as it will apply to all participants who act as either Order Flow Providers or Clearing Members equally. Also, the Exchange believes that increasing the fees applicable to Order Flow Providers and Clearing Members while leaving the ATP fee applicable to Floor Brokers is not unfairly discriminatory given the nature of the volume increases coupled with the fact that most ATP Holders conducting a Floor Broker business are already paying more than $500 per month as they are required to purchase an ATP for each Floor Broker in their employ—whereas that is not the case for Order Flow Providers and Clearing Members.

The Exchange also believes that the proposed conforming changes to terms

[3] *See* Securities Exchange Act Release No. 59478 (Feb. 27, 2009), 74 FR 9857 (Mar. 6, 2009) (SR–NYSEALTR–2009–19).

[4] *See* NASDAQ Phlx Fee Schedule as of June 1, 2012, section VI Membership fees, where the Permit and Registration fees for a PHLX Member transacting business on PHLX is $2,000 per month, available at *http://nasdaqomxphlx.cchwallstreet.com/NASDAQOMXPHLXTools/PlatformViewer.asp?selectednode=chp_1_4_1&manual=%2Fnasdaqomxphlx%2Fphlx%2Fphlx-rulesbrd%2F.*

[5] *See* Rule 900.2NY(11) and Rule 900.2NY(57), which define Clearing Member and Order Flow Provider, respectively.

[6] 15 U.S.C. 78f(b).

[7] 15 U.S.C. 78f(b)(4).

[8] *See* Securities Exchange Act Release No. 61670 (March 5, 2010), 75 FR 12325 (March 15, 2010) (SR–NYSEAmex–2010–19).

[9] *See supra* note 4.

in the Fee Schedule will add clarity and reduce any potential confusion among market participants.

B. Self-Regulatory Organization's Statement on Burden on Competition

The Exchange does not believe that the proposed rule change will impose any burden on competition that is not necessary or appropriate in furtherance of the purposes of the Act.

C. Self-Regulatory Organization's Statement on Comments on the Proposed Rule Change Received From Members, Participants, or Others

No written comments were solicited or received with respect to the proposed rule change.

III. Date of Effectiveness of the Proposed Rule Change and Timing for Commission Action

The foregoing rule change is effective upon filing pursuant to Section 19(b)(3)(A) [10] of the Act and subparagraph (f)(2) of Rule 19b–4 [11] thereunder, because it establishes a due, fee, or other charge imposed by the NYSE MKT.

At any time within 60 days of the filing of such proposed rule change, the Commission summarily may temporarily suspend such rule change if it appears to the Commission that such action is necessary or appropriate in the public interest, for the protection of investors, or otherwise in furtherance of the purposes of the Act.

IV. Solicitation of Comments

Interested persons are invited to submit written data, views, and arguments concerning the foregoing, including whether the proposed rule change is consistent with the Act. Comments may be submitted by any of the following methods:

Electronic Comments

- Use the Commission's Internet comment form (*http://www.sec.gov/rules/sro.shtml*); or
- Send an email to *rule-comments@sec.gov.* Please include File Number SR–NYSEMKT–2012–16 on the subject line.

Paper Comments

- Send paper comments in triplicate to Elizabeth M. Murphy, Secretary, Securities and Exchange Commission, 100 F Street NE., Washington, DC 20549–1090.

All submissions should refer to File Number SR–NYSEMKT–2012–16. This file number should be included on the subject line if email is used. To help the Commission process and review your comments more efficiently, please use only one method. The Commission will post all comments on the Commission's Internet Web site (*http://www.sec.gov/rules/sro.shtml*). Copies of the submission, all subsequent amendments, all written statements with respect to the proposed rule change that are filed with the Commission, and all written communications relating to the proposed rule change between the Commission and any person, other than those that may be withheld from the public in accordance with the provisions of 5 U.S.C. 552, will be available for Web site viewing and printing in the Commission's Public Reference Room, 100 F Street NE., Washington, DC 20549, on official business days between the hours of 10 a.m. and 3 p.m. Copies of such filing also will be available for inspection and copying at the principal office of the Exchange. All comments received will be posted without change; the Commission does not edit personal identifying information from submissions. You should submit only information that you wish to make available publicly. All submissions should refer to File Number SR–NYSEMKT–2012–16 and should be submitted on or before July 26, 2012.

For the Commission, by the Division of Trading and Markets, pursuant to delegated authority.[12]

Kevin M. O'Neill,

Deputy Secretary.

[FR Doc. 2012–16525 Filed 7–3–12; 8:45 am]

BILLING CODE 8011–01–P

[10] 15 U.S.C. 78s(b)(3)(A).

[11] 17 CFR 240.19b–4(f)(2).

[12] 17 CFR 200.30–3(a)(12).

SECURITIES AND EXCHANGE COMMISSION

[Release No. 34–67320; File No. SR–NYSEArca–2012–44]

Self-Regulatory Organizations; NYSE Arca, Inc.; Order Granting Approval of Proposed Rule Change Relating to Listing and Trading of iShares Strategic Beta U.S. Large Cap Fund and iShares Strategic Beta U.S. Small Cap Fund Under NYSE Arca Equities Rule 8.600

June 29, 2012.

I. Introduction

On May 14, 2012, NYSE Arca, Inc. (''Exchange'' or ''NYSE Arca'') filed with the Securities and Exchange Commission (''Commission''), pursuant to Section 19(b)(1) of the Securities Exchange Act of 1934 (''Act'' or ''Exchange Act'') [1] and Rule 19b–4 thereunder,[2] a proposed rule change to list and trade shares (''Shares'') of the iShares Strategic Beta U.S. Large Cap Fund and iShares Strategic Beta U.S. Small Cap Fund (each a ''Fund'' and, collectively, ''Funds'') under NYSE Arca Equities Rule 8.600. The proposed rule change was published in the **Federal Register** on May 30, 2012.[3] The Commission received no comments on the proposal. This order grants approval of the proposed rule change.

II. Description of the Proposal

The Exchange proposes to list and trade the Shares of the Funds pursuant to NYSE Arca Equities Rule 8.600, which governs the listing and trading of Managed Fund Shares on the Exchange. The Shares will be offered by iShares U.S. ETF Trust (''Trust''), a statutory trust organized under the laws of the State of Delaware and registered with the Commission as an open-end management investment company.[4] The Funds will be managed by BlackRock Fund Advisors (''BFA'' or ''Adviser''), an indirect wholly-owned subsidiary of BlackRock, Inc. BlackRock Investments, LLC will be the principal underwriter and distributor of the Funds' Shares. State Street Bank and Trust Company will serve as administrator, custodian, and transfer agent for the Funds. The Exchange states that the Adviser is affiliated with multiple broker-dealers and has implemented a fire wall with respect to such broker-dealers regarding access to information concerning the composition and/or changes to the Funds' portfolios.[5]

[1] 15 U.S.C. 78s(b)(1).

[2] 17 CFR 240.19b–4.

[3] *See* Securities Exchange Act Release No. 67045 (May 23, 2012), 77 FR 31899 (''Notice'').

[4] The Trust is registered under the Investment Company Act of 1940 (''1940 Act''). On December 21, 2011, the Trust filed with the Commission Form N–1A under the Securities Act of 1933 and under the 1940 Act relating to the (i) iShares Strategic Beta U.S. Large Cap Fund (File Nos. 333–178677 and 811–22649) (''Large Cap Registration Statement''), and (ii) iShares Strategic Beta U.S. Small Cap Fund (File Nos. 333–178675 and 811–22649) (''Small Cap Registration Statement'' and, together with the Large Cap Registration Statement, ''Registration Statements''). In addition, the Commission has issued an order granting exemptive relief to the Trust under the 1940 Act. *See* Investment Company Act Release No. 29571 (January 24, 2011) (File No. 812–13601) (''Exemptive Order'').

[5] *See* Commentary .06 to NYSE Arca Equities Rule 8.600. The Exchange represents that, in the event (a) the Adviser becomes newly affiliated with a broker-dealer, or (b) any new adviser or sub-adviser becomes affiliated with a broker-dealer, such adviser and/or sub-adviser will implement a fire wall with respect to such broker-dealer regarding access to information concerning the

Continued

Description of the iShares Strategic Beta U.S. Large Cap Fund

The iShares Strategic Beta U.S. Large Cap Fund will seek long-term capital appreciation. The Fund will seek to achieve its investment objective by investing, under normal circumstances,[6] at least 80% of its net assets in U.S. exchange-listed and traded equity securities of large-capitalization issuers. The Fund will seek to maintain strategic exposure to U.S. large-capitalization stocks with targeted investment characteristics. BFA will utilize a proprietary investment process to assemble an investment portfolio from a defined group of stocks that seeks to emphasize companies within the group that exhibit certain quantitative investment characteristics, such as higher quality earnings, low relative valuation, and smaller relative market capitalization, and de-emphasize companies that lack such characteristics. The investment process is intended to provide an increased exposure to securities of companies with higher quality earnings, lower relative valuations, and smaller relative market capitalizations than would a fund that seeks to replicate the performance of a broad U.S. large-capitalization stock index. Companies in the universe of U.S. large capitalization securities represent various sectors of the U.S. large capitalization market.

The Fund's proprietary investment process will begin with the selection of securities representing a defined investable universe of stocks of U.S. large-capitalization issuers. The universe is then subjected to rules-based screens designed to exclude securities with very low trading volume or very low prices. The stocks will then be scored based on their exposure to quantitative metrics such as leverage, return on equity, price-to-book ratio, and capitalization. BFA will assemble a portfolio emphasizing those stocks with high relative exposure to the desired investment characteristics, while seeking to remain diversified by industry.

Description of the iShares Strategic Beta U.S. Small Cap Fund

The iShares Strategic Beta U.S. Small Cap Fund seeks long-term capital appreciation. The Fund will seek to achieve its investment objective by investing, under normal circumstances, at least 80% of its net assets in U.S. exchange-listed and traded equity securities of small-capitalization issuers. The Fund will seek to maintain strategic exposure to U.S. small-capitalization stocks with targeted investment characteristics. BFA will utilize a proprietary investment process to assemble an investment portfolio from a defined group of stocks that seeks to emphasize companies within the group that exhibit certain quantitative investment characteristics, such as higher quality earnings, low relative valuation, and smaller relative market capitalization, and de-emphasize companies that lack such characteristics. The investment process is intended to provide an increased exposure to securities of companies with higher quality earnings, lower relative valuations, and smaller relative market capitalizations than would a fund that seeks to replicate the performance of a broad U.S. small-capitalization stock index. Companies in the universe of U.S. small capitalization securities represent various sectors of the U.S. small capitalization market.

The Fund's proprietary investment process will begin with securities representing a defined investable universe of stocks of U.S. small-capitalization issuers. The universe will then be subjected to rules-based screens designed to exclude securities with very low trading volume or very low prices. The stocks are then scored based on their exposure to quantitative metrics such as leverage, return on equity, price-to-book ratio, and capitalization. BFA will assemble a portfolio emphasizing those stocks with high relative exposure to the desired investment characteristics, while seeking to remain diversified by industry.

With respect to each of the Funds, no less than 80% of the equity securities held by the respective Fund will be listed and traded on a U.S. national securities exchange.

Other Investments of the Funds

While each Fund, under normal circumstances, will invest at least 80% of its net assets in their respective investments, each Fund may directly invest in certain other investments, as described below. The Funds may temporarily depart from their normal investment process,[7] provided that the alternative, in the opinion of BFA, is consistent with a Fund's investment objective and is in the best interest of a Fund. However, BFA will not seek to actively time market movements.

Each Fund may hold up to an aggregate amount of 15% of its net assets in illiquid securities (calculated at the time of investment), including Rule 144A securities. Each Fund will monitor its portfolio liquidity on an ongoing basis to determine whether, in light of current circumstances, an adequate level of liquidity is being maintained, and will consider taking appropriate steps in order to maintain adequate liquidity if, through a change in values, net assets, or other circumstances, more than 15% of a Fund's net assets are held in illiquid securities. Illiquid securities include securities subject to contractual or other restrictions on resale and other instruments that lack readily available markets as determined in accordance with Commission staff guidance.

The Funds may invest in repurchase and reverse repurchase agreements. A repurchase agreement is an instrument under which the purchaser (*i.e.,* a Fund) acquires the security and the seller agrees, at the time of the sale, to repurchase the security at a mutually agreed upon time and price, thereby determining the yield during the purchaser's holding period. Reverse repurchase agreements involve the sale of securities with an agreement to repurchase the securities at an agreed-upon price, date, and interest payment, and have the characteristics of borrowing.

The Funds may invest in other short-term instruments, including money market instruments, on an ongoing basis to provide liquidity or for other reasons. Money market instruments are generally short-term investments that may include but are not limited to: (i) Shares of money market funds (including those advised by BFA or otherwise affiliated with BFA); (ii) obligations issued or guaranteed by the U.S. government, its agencies, or instrumentalities (including government-sponsored enterprises); (iii) negotiable certificates of deposit, bankers' acceptances, fixed-time deposits, and other obligations of U.S. and non-U.S. banks (including non-U.S.

composition and/or changes to the portfolio, and will be subject to procedures designed to prevent the use and dissemination of material, non-public information regarding such portfolio.

[6] The term ''under normal circumstances'' includes, but is not limited to, the absence of extreme volatility or trading halts in the equity markets or the financial markets generally; operational issues causing dissemination of inaccurate market information; or force majeure type events such as systems failure, natural or man-made disaster, act of God, armed conflict, act of terrorism, riot or labor disruption, or any similar intervening circumstance.

[7] Circumstances under which the Funds may temporarily depart from their normal investment process include, but are not limited to, extreme volatility or trading halts in the equity markets or the financial markets generally; operational issues causing dissemination of inaccurate market information; or force majeure type events such as systems failure, natural or man-made disaster, act of God, armed conflict, act of terrorism, riot or labor disruption, or any similar intervening circumstance.

branches) and similar institutions; (iv) commercial paper rated, at the date of purchase, ''Prime–1'' by Moody's® Investors Service, Inc., ''F–1'' by Fitch Inc., or ''A–1'' by Standard & Poor's®, or if unrated, of comparable quality as determined by BFA; (v) non-convertible corporate debt securities (*e.g.,* bonds and debentures) with remaining maturities at the date of purchase of not more than 397 days and that satisfy the rating requirements set forth in Rule 2a–7 under the 1940 Act; and (vi) short-term U.S. dollar-denominated obligations of non-U.S. banks (including U.S. branches) that, in the opinion of BFA, are of comparable quality to obligations of U.S. banks which may be purchased by the Funds. Any of these instruments may be purchased on a current or forward-settled basis. Time deposits are non-negotiable deposits maintained in banking institutions for specified periods of time at stated interest rates.

A Fund may invest a small portion of its net assets in tracking stocks, which primarily will be U.S. exchange-listed. A tracking stock is a separate class of common stock whose value is linked to a specific business unit or operating division within a larger company and is designed to ''track'' the performance of such business unit or division. The tracking stock may pay dividends to shareholders independent of the parent company. The parent company, rather than the business unit or division, generally is the issuer of tracking stock. However, holders of the tracking stock may not have the same rights as holders of the company's common stock.

Each Fund will be classified as a ''diversified'' investment company under the 1940 Act. In addition, the Funds intend to qualify for and to elect treatment as a separate regulated investment company (''RIC'') under Subchapter M of the Internal Revenue Code. The Funds will not purchase the securities of issuers conducting their principal business activity in the same industry if, immediately after the purchase and as a result thereof, the value of a Fund's investments in that industry would equal or exceed 25% of the current value of a Fund's total assets, provided that this restriction does not limit a Fund's: (i) Investments in securities of other investment companies, (ii) investments in securities issued or guaranteed by the U.S. government, its agencies or instrumentalities, or (iii) investments in repurchase agreements collateralized by U.S. government securities.

In accordance with the Exemptive Order, the Funds will not invest in options, futures, or swaps. The Funds may invest in currency forwards for hedging and trade settlement purposes.[8] Each Fund's investments will be consistent with its respective investment objective and will not be used to enhance leverage. The Funds will not invest in non-U.S.-registered equity securities.

The Exchange represents that the Shares will conform to the initial and continued listing criteria under NYSE Arca Equities Rule 8.600. The Exchange further represents that, for initial and/or continued listing, the Funds will be in compliance with Rule 10A–3 under the Exchange Act,[9] as provided by NYSE Arca Equities Rule 5.3. A minimum of 100,000 Shares for each Fund will be outstanding at the commencement of trading on the Exchange. The Exchange will obtain a representation from the issuer of the Shares that the net asset value (''NAV'') per Share will be calculated daily and that the NAV and the Disclosed Portfolio, as defined in NYSE Arca Equities Rule 8.600(c)(2), will be made available to all market participants at the same time.

Additional information regarding the Trust, the Funds, and the Shares, including investment strategies, risks, creation and redemption procedures, fees, portfolio holdings disclosure policies, distributions, and taxes, among other things, is included in the Notice and Registration Statements.[10]

III. Discussion and Commission's Findings

The Commission has carefully reviewed the proposed rule change and finds that it is consistent with the requirements of Section 6 of the Act [11] and the rules and regulations thereunder applicable to a national securities exchange.[12] In particular, the Commission finds that the proposal is consistent with Section 6(b)(5) of the Act,[13] which requires, among other things, that the Exchange's rules be designed to promote just and equitable principles of trade, to remove impediments to and perfect the mechanism of a free and open market and a national market system, and, in general, to protect investors and the public interest. The Commission notes that the Funds and the Shares must comply with the requirements of NYSE Arca Equities Rule 8.600 to be listed and traded on the Exchange.

The Commission finds that the proposal to list and trade the Shares on the Exchange is consistent with Section 11A(a)(1)(C)(iii) of the Act,[14] which sets forth Congress' finding that it is in the public interest and appropriate for the protection of investors and the maintenance of fair and orderly markets to assure the availability to brokers, dealers, and investors of information with respect to quotations for, and transactions in, securities. Quotation and last-sale information for the Shares will be available via the Consolidated Tape Association (''CTA'') high-speed line. In addition, the Indicative Optimized Portfolio Value (''IOPV''), which is the Portfolio Indicative Value, as defined in NYSE Arca Equities Rule 8.600(c)(3), will be widely disseminated by one or more major market data vendors at least every 15 seconds during the Core Trading Session.[15] On each business day, before commencement of trading in Shares during the Core Trading Session on the Exchange, the Funds will disclose on their Web site the Disclosed Portfolio that will form the basis for the Funds' calculation of the NAV at the end of the business day.[16] The NAV of the Funds will be determined once each business day, generally as of the regularly scheduled close of business of the New York Stock Exchange (''NYSE'') (normally 4 p.m., Eastern time) on each day that the NYSE is open for trading, based on prices at the time of closing provided that (a) any Fund assets or liabilities denominated in currencies other than the U.S. dollar are translated into U.S. dollars at the prevailing market rates on the date of valuation as quoted by one or more data service providers, and (b) U.S. fixed-income assets may be valued as of the announced closing time for trading in fixed-income instruments in a particular market or exchange. A basket composition file, which includes the security names and share quantities required to be delivered in exchange for a Fund's Shares, together with estimates

[8] A forward currency contract is an obligation to purchase or sell a specific currency at a future date, which may be any fixed number of days from the date of the contract agreed upon by the parties, at a price set at the time of the contract.

[9] 17 CFR 240.10A–3.

[10] *See* Notice and Registration Statements, *supra* notes 3 and 4, respectively.

[11] 15 U.S.C. 78f.

[12] In approving this proposed rule change, the Commission has considered the proposed rule's impact on efficiency, competition, and capital formation. *See* 15 U.S.C. 78c(f).

[13] 17 U.S.C. 78f(b)(5).

[14] 15 U.S.C. 78k–1(a)(1)(C)(iii).

[15] According to the Exchange, several major market data vendors display and/or make widely available IOPVs published on the CTA or other data feeds.

[16] On a daily basis, the Adviser will disclose for each portfolio security or other financial instrument of the Funds the following information: Ticker symbol (if applicable); name of security and financial instrument; number of shares or dollar value of financial instruments held in the portfolio; and percentage weighting of the security and financial instrument in the portfolio.

and actual cash components, will be publicly disseminated daily prior to the opening of the NYSE via the National Securities Clearing Corporation. Information regarding market price and trading volume of the Shares will be continually available on a real-time basis throughout the day on brokers' computer screens and other electronic services, and information regarding the previous day's closing price and trading volume information for the Shares will be published daily in the financial section of newspapers. The intra-day, closing, and settlement prices or other values of the portfolio securities, currency forwards, and other Fund investments are also generally readily available from the national securities exchanges trading such securities, automated quotation systems, published or other public sources, or on-line information services, such as Bloomberg or Reuters. The Funds' Web site will also include a form of the prospectus for each Fund, information relating to NAV (updated daily), and other quantitative and trading information.

The Commission further believes that the proposal to list and trade the Shares is reasonably designed to promote fair disclosure of information that may be necessary to price the Shares appropriately and to prevent trading when a reasonable degree of transparency cannot be assured. The Commission notes that the Exchange will obtain a representation from the issuer of the Shares that the NAV per Share will be calculated daily and that the NAV and the Disclosed Portfolio will be made available to all market participants at the same time.[17] In addition, the Exchange will halt trading in the Shares under the specific circumstances set forth in NYSE Arca Equities Rule 8.600(d)(2)(D) and may halt trading in the Shares if trading is not occurring in the securities and/or the financial instruments comprising the Disclosed Portfolio of the Funds, or if other unusual conditions or circumstances detrimental to the maintenance of a fair and orderly market are present.[18] Further, the Commission notes that the Reporting Authority that provides the Disclosed Portfolio must implement and maintain, or be subject to, procedures designed to prevent the use and dissemination of material non-public information regarding the actual components of the portfolio.[19] The Exchange states that it has a general policy prohibiting the distribution of material, non-public information by its employees. Moreover, the Exchange states that the Adviser is affiliated with multiple broker-dealers and represents that the Adviser has implemented a fire wall with respect to such broker-dealers regarding access to information concerning the composition and/or changes to the Funds' portfolios.[20] The Commission also notes that the Exchange can obtain information via the Intermarket Surveillance Group (''ISG'') from other exchanges that are ISG members, including all U.S. national securities exchanges, or with which the Exchange has in place a comprehensive surveillance sharing agreement.

The Exchange represents that the Shares are deemed to be equity securities, thus rendering trading in the Shares subject to the Exchange's existing rules governing the trading of equity securities. In support of this proposal, the Exchange has made representations, including:

(1) The Shares will conform to the initial and continued listing criteria under NYSE Arca Equities Rule 8.600.

(2) The Exchange has appropriate rules to facilitate transactions in the Shares during all trading sessions.

(3) The Exchange's surveillance procedures applicable to derivative products, which include Managed Fund Shares, are adequate to properly monitor Exchange trading of the Shares in all trading sessions and to deter and detect violations of Exchange rules and applicable federal securities laws.

(4) Prior to the commencement of trading, the Exchange will inform its Equity Trading Permit (''ETP'') Holders in an Information Bulletin of the special characteristics and risks associated with trading the Shares. Specifically, the Information Bulletin will discuss the following: (a) The procedures for purchases and redemptions of Shares in Creation Unit aggregations (and that Shares are not individually redeemable); (b) NYSE Arca Equities Rule 9.2(a), which imposes a duty of due diligence on its ETP Holders to learn the essential facts relating to every customer prior to trading the Shares; (c) the risks involved in trading the Shares during the Opening and Late Trading Sessions when an updated IOPV will not be calculated or publicly disseminated; (d) how information regarding the IOPV is disseminated; (e) the requirement that ETP Holders deliver a prospectus to investors purchasing newly issued Shares prior to or concurrently with the confirmation of a transaction; and (f) trading and other information.

(5) For initial and/or continued listing, the Funds will be in compliance with Rule 10A–3 under the Act,[21] as provided by NYSE Arca Equities Rule 5.3.

(6) With respect to each of the Funds, no less than 80% of the equity securities held by the respective Fund will be listed and traded on a U.S. national securities exchange.

(7) Each Fund may hold up to an aggregate amount of 15% of its net assets in illiquid securities, including Rule 144A securities.

(8) Each Fund will not: (a) invest in non-U.S.-registered equity securities; and (b) pursuant to the terms of the Exemptive Order, invest in options, futures, or swap agreements. In addition, each Fund's investments will be consistent with its respective investment objective and will not be used to enhance leverage.

(9) A minimum of 100,000 Shares of each Fund will be outstanding at the commencement of trading on the Exchange.

This approval order is based on all of the Exchange's representations and description of the Funds, including those set forth above and in the Notice.

For the foregoing reasons, the Commission finds that the proposed rule change is consistent with Section 6(b)(5) of the Act[22] and the rules and

[17] *See* NYSE Arca Equities Rule 8.600(d)(1)(B).

[18] *See* NYSE Arca Equities Rule 8.600(d)(2)(C). With respect to trading halts, the Exchange may consider other relevant factors in exercising its discretion to halt or suspend trading in the Shares of the Funds. Trading in Shares of the Funds will be halted if the circuit breaker parameters in NYSE Arca Equities Rule 7.12 have been reached. Trading also may be halted because of market conditions or for reasons that, in the view of the Exchange, make trading in the Shares inadvisable.

[19] *See* NYSE Arca Equities Rule 8.600(d)(2)(B)(ii).

[20] *See supra* note 5 and accompanying text. The Commission notes that an investment adviser to an open-end fund is required to be registered under the Investment Advisers Act of 1940 (''Advisers Act''). As a result, the Adviser and its related personnel are subject to the provisions of Rule 204A–1 under the Advisers Act relating to codes of ethics. This Rule requires investment advisers to adopt a code of ethics that reflects the fiduciary nature of the relationship to clients as well as compliance with other applicable securities laws. Accordingly, procedures designed to prevent the communication and misuse of non-public information by an investment adviser must be consistent with Rule 204A–1 under the Advisers Act. In addition, Rule 206(4)–7 under the Advisers Act makes it unlawful for an investment adviser to provide investment advice to clients unless such investment adviser has (i) Adopted and implemented written policies and procedures reasonably designed to prevent violation, by the investment adviser and its supervised persons, of the Advisers Act and the Commission rules adopted thereunder; (ii) implemented, at a minimum, an annual review regarding the adequacy of the policies and procedures established pursuant to subparagraph (i) above and the effectiveness of their implementation; and (iii) designated an individual (who is a supervised person) responsible for administering the policies and procedures adopted under subparagraph (i) above.

[21] *See* 17 CFR 240.10A–3.

[22] 15 U.S.C. 78f(b)(5).

regulations thereunder applicable to a national securities exchange.

IV. Conclusion

It is therefore ordered, pursuant to Section 19(b)(2) of the Act,[23] that the proposed rule change (SR–NYSEArca–2012–44) be, and it hereby is, approved.

For the Commission, by the Division of Trading and Markets, pursuant to delegated authority.[24]

Kevin M. O'Neill,

Deputy Secretary.

[FR Doc. 2012–16524 Filed 7–3–12; 8:45 am]

BILLING CODE 8011–01–P

SECURITIES AND EXCHANGE COMMISSION

[Release No. 34–67319; File No. SR–NSX–2012–09]

Self-Regulatory Organizations; National Stock Exchange, Inc.; Notice of Filing and Immediate Effectiveness of Proposed Rule Change To Modify the NSX Fee and Rebate Schedule

June 29, 2012.

Pursuant to Section 19(b)(1) of the Securities Exchange Act of 1934 (the ''Act'')[1] and Rule 19b–4 thereunder,[2] notice is hereby given that on June 28, 2012, National Stock Exchange, Inc. filed with the Securities and Exchange Commission (''Commission'') the proposed rule change, as described in Items I and II below, which Items have been prepared by the National Stock Exchange, Inc. The Commission is publishing this notice to solicit comment on the proposed rule change from interested persons.

I. Self-Regulatory Organization's Statement of the Terms of Substance of the Proposed Rule Change

National Stock Exchange, Inc. (''NSX®'' or ''Exchange'') is proposing to amend its Fee and Rebate Schedule (the ''Fee Schedule'') issued pursuant to Exchange Rule 16.1(c) to increase the rebates for certain orders executed in the Exchange's Order Delivery Mode.

The text of the proposed rule change is available on the Exchange's Web site at *http://www.nsx.com,* at the principal office of the Exchange, and at the Commission's Public Reference Room.

II. Self-Regulatory Organization's Statement of the Purpose of, and Statutory Basis for, the Proposed Rule Change

A. Self-Regulatory Organization's Statement of the Purpose of, and Statutory Basis for, the Proposed Rule Change

1. Purpose

With this rule change, the Exchange is proposing to amend the Fee Schedule with respect to the rebates applicable to liquidity adding order executions in securities priced at least one dollar in the Exchange's Order Delivery Mode of order interaction (''Order Delivery''). The proposed changes are further addressed below.

Rebates for Executions of Displayed Orders of Securities Priced at Least One Dollar in Order Delivery

As reflected in Section II of the Fee Schedule, for all liquidity adding displayed orders of securities priced at least one dollar in Order Delivery, the Exchange currently offers four tiers of progressively greater rebates in the amounts of $0.0008 per share (tier 1), $0.0024 per share (tier 2), $0.0027 per share plus 25% of market data revenues attributable to such orders (tier 3), or $0.0027 per share plus 50% of market data revenues attributable to such orders (tier 4). The applicable rebate tier depends on an ETP Holder's ADV. Endnote 3 provides that ''ADV'' means, with respect to an ETP Holder, the number of shares such ETP Holder has executed on average per trading day (excluding partial trading days) in AutoEx or Order Delivery, as applicable, across all tapes in securities priced at least one dollar on NSX for the calendar month (or partial month, as applicable) in which the executions occurred. Endnote 3 further clarifies that ''ADV'' as used with respect to the Exchange's Automatic Execution mode of order interaction (''AutoEx'') shall mean only those executed shares of the ETP Holder that are submitted in AutoEx mode, and that ADV as used with respect to Order Delivery shall mean only those executed shares of the ETP Holder that are submitted in Order Delivery mode.

Specifically, the current Fee Schedule provides that a $0.0008 per share rebate (with no market data revenue sharing) applies to an ETP Holder's Order Delivery, dollar or higher displayed order executions that add liquidity where the ETP Holder's ADV is less than 15,000,000 shares; a $0.0024 per share rebate (with no market data revenue sharing) applies to an ETP Holder's Order Delivery, dollar or higher displayed order executions that add liquidity where the ETP Holder's ADV is at least 15,000,000 shares but less than 25,000,000 shares; a $0.0027 per share rebate (plus 25% market data revenue sharing) applies to an ETP Holder's Order Delivery, dollar or higher displayed order executions that add liquidity where the ETP Holder's ADV is at least 25,000,000 shares but less than 30,000,000 shares; and a $0.0027 per share rebate (plus 50% market data revenue sharing) applies to an ETP Holder's Order Delivery, dollar or higher displayed order executions that add liquidity where the ETP Holder's ADV is at least 30,000,000 shares. Currently, an ETP Holder's ''ADV'' with respect to the rebate in Order Delivery for securities priced at least one dollar is calculated to include only the ETP Holder's volumes in Order Delivery, and excludes sub-dollar securities.

The proposed rule change provides that each of the above-referenced four rebate dollar amounts in Order Delivery may be increased by $0.0003 per share (to the amounts of $0.0011 per share in tier 1, $0.0027 per share in tier 2, or $0.0030 per share in each of tiers 3 and 4) if an ETP Holder achieves, in the same measurement period, a combined ADV in both AutoEx and Order Delivery of at least 11.5 million shares, of which at least one million five hundred thousand are Order Delivery ADV. Endnote 5, which is proposed to apply to each of the four rebate tiers in Order Delivery, provides that an ETP Holder shall receive an additional $0.0003 per share rebate (with respect to executions of Displayed Orders in Order Delivery that are priced at least $1) in the event such ETP Holder achieves an Order Delivery ADV of at least 1,500,000 and an AutoEx ADV (in the same period) of at least 10,000,000. No changes are proposed to the market data sharing program component that is applicable to the third and fourth tier.

A conforming edit adding the clause ''except as otherwise noted'' is proposed to be made to the definition of ADV in Endnote 3 to allow for explicit exceptions (as is contained in proposed Endnote 5) to the general definition of ADV as set forth in Endnote 3. In addition, certain non-substantive formatting edits (rearranging the header ''All Tapes'') are proposed to the headers in Section I for the purpose of streamlining the text of the Fee Schedule.

Rationale

The proposed increase to the dollar amounts of the rebates applicable to displayed liquidity providing Order

---

[23] 15 U.S.C. 78s(b)(2).

[24] 17 CFR 200.30–3(a)(12).

[1] 15 U.S.C. 78s(b)(1).

[2] 17 CFR 240.19b–4.

Delivery executions in securities priced at least one dollar is a reasonable method to incentivize ETP Holders that use Order Delivery to submit increased volumes in both Order Delivery and AutoEx, and ultimately to increase the revenues of the Exchange for the purpose of continuing to adequately fund its regulatory and general business functions. The Exchange believes that the proposed rebate changes will not impair its ability to carry out its regulatory responsibilities. The modifications are reasonable and equitably allocated among those ETP Holders that opt to submit orders in Order Delivery and AutoEx, and are not unfairly discriminatory because qualified ETP Holders are free to elect whether or not to send such orders to the Exchange. Based upon the information above, the Exchange believes that the adjustments to the Fee Schedule are consistent with the protection of investors and the public interest.

Operative Date and Notice

The Exchange currently intends to make the proposed modifications, which are effective on filing of this proposed rule, operative as of commencement of trading on July 2, 2012. Pursuant to Exchange Rule 16.1(c), the Exchange will ''provide ETP Holders with notice of all relevant dues, fees, assessments and charges of the Exchange'' through the issuance of a Regulatory Circular of the changes to the Fee Schedule and will post a copy of the rule filing on the Exchange's Web site (*www.nsx.com*).

2. Statutory Basis

The Exchange believes that the rule changes as described herein are consistent with the provisions of Section 6(b) of the Act, in general, and Section 6(b)(4) of the Act,[3] in particular in that each change is designed to provide for the equitable allocation of reasonable dues, fees and other charges among its members and other persons using the facilities of the Exchange.

The changes to the rebates payable for executions in securities priced at least one dollar in Order Delivery are reasonable because they are designed to incentivize the submission of such orders as well as displayed orders of at least one dollar in AutoEx, and to generally increase order volume on the Exchange. The changes are equitably allocated and not unfairly discriminatory because all qualified ETP Holders are eligible to submit (or not submit) displayed liquidity providing orders of securities priced at least one dollar in Order Delivery and AutoEx on the Exchange. The rebate adjustments are reasonable methods to incentivize the submission of such orders. All similarly situated members are subject to the same fee structure, and access to the Exchange is offered on terms that are not unfairly discriminatory.

B. Self-Regulatory Organization's Statement on Burden on Competition

The Exchange does not believe that the proposed rule change will impose any inappropriate burden on competition.

C. Self-Regulatory Organization's Statement on Comments on the Proposed Rule Change Received From Members, Participants, or Others

The Exchange has neither solicited nor received written comments on the proposed rule change.

III. Date of Effectiveness of the Proposed Rule Change and Timing for Commission Action

The foregoing rule change has become effective pursuant to Section 19(b)(3)(A)(ii) of the Act[4] and subparagraph (f)(2) of Rule 19b–4 thereunder.[5] At any time within 60 days of the filing of the proposed rule change, the Commission summarily may temporarily suspend such rule change if it appears to the Commission that such action is necessary or appropriate in the public interest, for the protection of investors, or otherwise in furtherance of the purposes of the Act.

IV. Solicitation of Comments

Interested persons are invited to submit written data, views, and arguments concerning the foregoing, including whether the proposed rule change is consistent with the Act. Comments may be submitted by any of the following methods:

Electronic Comments

- Use the Commission's Internet comment form (*http://www.sec.gov/rules/sro.shtml*); or
- Send an email to *rule-comments@sec.gov.* Please include File Number SR–NSX–2012–09 on the subject line.

Paper Comments

- Send paper comments in triplicate to Elizabeth M. Murphy, Secretary, Securities and Exchange Commission, 100 F Street NE., Washington, DC 20549–1090.

All submissions should refer to File Number SR–NSX–2012–09. This file number should be included on the subject line if email is used. To help the Commission process and review your comments more efficiently, please use only one method. The Commission will post all comments on the Commission's Internet Web site (*http://www.sec.gov/rules/sro.shtml*). Copies of the submission, all subsequent amendments, all written statements with respect to the proposed rule change that are filed with the Commission, and all written communications relating to the proposed rule change between the Commission and any person, other than those that may be withheld from the public in accordance with the provisions of 5 U.S.C. 552, will be available for Web site viewing and printing in the Commission's Public Reference Room, 100 F Street NE., Washington, DC 20549, on official business days between the hours of 10 a.m. and 3 p.m. Copies of such filing also will be available for inspection and copying at the principal office of the Exchange. All comments received will be posted without change; the Commission does not edit personal identifying information from submissions. You should submit only information that you wish to make available publicly. All submissions should refer to File Number SR–NSX–2012–09 and should be submitted on or before July 26, 2012.

For the Commission, by the Division of Trading and Markets, pursuant to delegated authority.[6]

Kevin M. O'Neill,

Deputy Secretary.

[FR Doc. 2012–16523 Filed 7–3–12; 8:45 am]

BILLING CODE 8011–01–P

[3] 15 U.S.C. 78f(b)(4).

[4] 15 U.S.C. 78s(b)(3)(A)(ii).

[5] 17 CFR 240.19b–4(f)(2).

[6] 17 CFR 200.30–3(a)(12).

SECURITIES AND EXCHANGE COMMISSION

[Release No. 34–67290; File No. SR–EDGX–2012–25]

Self-Regulatory Organizations; EDGX Exchange, Inc.; Notice of Filing of Proposed Rule Changes To Amend EDGX Rules To Add the Route Peg Order

June 28, 2012.

Pursuant to Section 19(b)(1) of the Securities Exchange Act of 1934 (the ''Act''),[1] and Rule 19b–4 thereunder,[2] notice is hereby given that on June 26, 2012, the EDGX Exchange, Inc. (the

[1] 15 U.S.C. 78s(b)(1).

[2] 17 CFR 240.19b–4.

''Exchange'' or ''EDGX'') filed with the Securities and Exchange Commission (the ''Commission'') the proposed rule change as described in Items II and III below, which items have been prepared by the self-regulatory organization. The Commission is publishing this notice to solicit comments on the proposed rule changes from interested persons.

I. Self-Regulatory Organization's Statement of the Terms of Substance of the Proposed Rule Changes

The Exchange proposes to amend Rule 11.5 to provide an additional order type, the Route Peg Order. In addition, the Exchange proposes to amend Rule 11.8 to describe the priority of the Route Peg Order relative to other orders on the EDGX Book.

The text of the proposed rule changes are attached as Exhibit 5 [3] and are available on the Exchange's Web site at *www.directedge.com,* at the Exchange's principal office, at the Public Reference Room of the Commission, and on the Commission's Web site at *www.sec.gov*.

II. Self-Regulatory Organization's Statement of the Purpose of, and Statutory Basis for, the Proposed Rule Changes

In its filing with the Commission, the Exchange included statements concerning the purpose of, and basis for, the proposed rule changes and discussed any comments it received on the proposed rule changes. The text of these statements may be examined at the places specified in Item IV below. The self-regulatory organization has prepared summaries, set forth in Sections A, B and C below, of the most significant aspects of such statements.

A. Self-Regulatory Organization's Statement of the Purpose of, and Statutory Basis for, the Proposed Rule Changes

Purpose

The Exchange proposes to amend Rule 11.5(c) to add a new subparagraph (17) that describes a Route Peg Order. A Route Peg Order would be a non-displayed limit order eligible for execution at the national best bid (the ''NBB'') for Route Peg Orders to buy, and at the national best offer (the ''NBO'', and together with the NBB, the ''NBBO'') for Route Peg Orders to sell, against routable orders [4] that are equal to or less than the size of the Route Peg Order. Thus, the Route Peg Order would only be eligible for execution at a price that matches the NBB for buy orders, and the NBO for sell orders. The Route Peg Order would be a passive, resting order designed exclusively to provide liquidity; therefore, it would not be permitted to take liquidity.

An incoming order that has been designated as eligible for routing would be able to interact with Route Peg Orders. Such an order would first be matched against orders other than Route Peg Orders in price/time priority in accordance with Rule 11.8(a)(2)(A)–(D). If any portion of the incoming order remained unexecuted, only then would such order be eligible to execute against Route Peg Orders.[5] Thus, the Route Peg Order is intended only to provide liquidity in the event that a marketable order would otherwise route to another destination.

As mentioned *supra,* Route Peg Orders would only trade with orders that are equal to or smaller in quantity than the original order quantity of the Route Peg Order. If a Route Peg Order were partially executed, it would be able to execute against orders that were larger than the remaining balance of the order, but those orders would still need to be equal to or smaller than the original order quantity of the Route Peg Order.[6]

The following example illustrates how this would work: Assume Member A places a Route Peg Order to buy 500 shares, and an incoming order to sell executes against the Route Peg Order at the NBB for 300 shares. That would leave Member A with a remaining balance of 200 shares to buy. Another incoming order to sell 400 shares would be eligible to execute against Member A's balance, for 200 shares, because the size of its order would be less than the original size of Member A's order. If, however, the incoming order were to sell 600 shares, it would not execute against the Route Peg Order because the size of the order would be greater than the original size of Member A's order. In that event, such order would be routed externally. It should be noted, however, that if there were another Route Peg Order on the Book, behind Member A's order in time priority, for, say, 1,000 shares, the order to sell 600 shares would execute against that second Route Peg Order.

The Exchange elected to design the System in this manner, as opposed to alternatives such as measuring incoming orders against the aggregate size of all Route Peg Orders then on the Book, in order to avoid the possibility of a single block-sized order potentially clearing all the liquidity on the Book attributable to Route Peg Orders.

Route Peg Orders would be able to be entered, cancelled and cancelled/replaced prior to and during Regular Trading Hours.[7] Route Peg Orders would be eligible for execution in a given security during Regular Trading Hours, except that, even after the commencement of Regular Trading Hours, Route Peg Orders would not be eligible for execution (1) in the opening cross, and (2) until such time that regular session orders in that security could be posted to the EDGX Book.[8] A Route Peg Order would not execute at a price that is inferior to a Protected Quotation,[9] and would not be permitted to execute if the NBBO were locked or crossed. Any and all remaining, unexecuted Route Peg Orders would be cancelled at the conclusion of Regular Trading Hours.

The Route Peg Order would provide Members with an additional means to post stable trading interest at the NBB and NBO. The purpose of the Route Peg Order is to encourage Members to further enhance the depth of liquidity at the NBBO on the Exchange. The Exchange believes that if the Route Peg Order became widely used, Members seeking to access liquidity at the NBBO would be more motivated to direct their orders to EDGX because they would have a heightened expectation of the availability of liquidity at the NBBO. In addition, a User [10] whose order

[3] The Commission notes that the Exhibit 5 is attached to the filing, but is not attached to this Notice.

[4] Orders that are not designated for routing are not executable against Route Peg Orders because Users entering non-routable orders typically expect to post liquidity on EDGX or seek to execute immediately against the EDGX displayed quote or attempt to ferret out hidden liquidity at or within the NBBO, *e.g.,* through an Immediate-or-Cancel Order type. By contrast, the Route Peg Order would be designed for Users to interact with other Users that seek to access liquidity at the NBBO, and that employ routable orders to access such liquidity at a range of trading venues.

[5] The Exchange proposes to codify this principle in proposed new paragraph (a)(2)(E) of Rule 11.8.

[6] If a Route Peg Order were partially executed, the remaining portion of the order would continue to be eligible for execution, but it would be assigned a new time priority and new timestamp after each partial execution, until either the remaining size of the order is exhausted or it is cancelled. Assigning a new timestamp after each partial execution would allow for a kind of rotating priority of execution for Users who place Route Peg Orders. The Exchange is proposing to codify this principle in Rule 11.8(a)(5) and proposed new subparagraph (a)(7) of Rule 11.8.

[7] As defined in Rule 1.5(y).

[8] To illustrate, for stocks listed on the New York Stock Exchange LLC (the ''NYSE''), regular session orders can be posted to the EDGX Book upon the dissemination by the responsible Securities Information Processor (''SIP'') of an opening print in that stock on the NYSE. Conversely, for stocks listed on, say, the NASDAQ Stock Market LLC, regular session orders can be posted to the EDGX Book upon the dissemination of the NBBO by the responsible SIP in that stock.

[9] As defined in Rule 1.5(v).

[10] As defined in Rule 1.5(ee).

executed against a Route Peg Order would be able to obtain an execution at the NBB or NBO while minimizing the risk that incremental latency associated with routing the order to an away destination may result in an inferior execution.

Basis

The Exchange believes that the proposed rule changes are consistent with Section 6(b) of the Act [11] and further the objectives of Section 6(b)(5) of the Act,[12] in that they are designed to prevent fraudulent and manipulative acts and practices, to promote just and equitable principles of trade, to foster cooperation and coordination with persons engaged in facilitating transactions in securities, and to remove impediments to and perfect the mechanisms of a free and open market and a national market system, and, in general, to protect investors and the public interest. Moreover, the Exchange believes that the proposed rule changes are not designed to permit unfair discrimination between customers, issuers, brokers, or dealers.

The benefits to investors of enhanced depth of liquidity at the NBBO in today's market structure cannot be understated. The Route Peg Order is designed to incentivize Users to place greater liquidity at the NBBO, thereby promoting more favorable and efficient executions for the benefit of public customers. It would do so by (1) Offering liquidity providers a means to use the Exchange to post larger limit orders that are only executable at the NBBO and that do not disclose their trading interest to other market participants in advance of execution; (2) offering market participants seeking to access liquidity a greater expectation of market depth at the NBBO than may currently be the case; and (3) offering more predictable executions at the NBBO for Users by reducing the risk that incremental latency associated with routing an order to an away destination may result in an inferior execution. Thus, by providing an additional means by which market participants can be encouraged to post liquidity at the NBBO on the Exchange, which would add depth and support to the NBBO on the Exchange and mitigate the negative effects of market fragmentation, the proposed rule changes would promote just and equitable principles of trade and remove impediments to and perfect the mechanism of a free and open market and national market system. Moreover, the proposed rule changes would protect investors and the public interest by increasing the probability of an execution on the Exchange at the NBBO in the event that the order would otherwise be shipped to an external destination and potentially miss an execution at the NBBO while in transit.

The Exchange believes, however, that the benefits to be derived from Route Peg Orders would only be realized if Route Peg Orders only interact with orders eligible for routing. Routable orders are typically characteristic of public customers, both retail and institutional (colloquially referred to as well as ''natural'' investors), who are concerned with executing at the best price. On the other hand, non-routable orders typically expect to post liquidity on the Book or seek to execute immediately, such as via an Immediate-or-Cancel Order, against the Exchange's best displayed bid or offer or to ferret out hidden liquidity at or inside the NBBO (colloquially referred to as well as ''pinging''). Professional traders, in particular, are more apt to submit, and often immediately cancel, ''pinging'' orders, as reflected in generally higher message-to-trade ratios. The Exchange believes this type of order behavior, while it may have its own business purposes, would not be suitable to interact with Route Peg Orders simply because Users would be reticent to post liquidity via Route Peg Orders given the uncertain, and therefore difficult to manage, exposure to executions against orders attributable to professional traders. Indeed, we believe potential liquidity providers would be more apt to provide liquidity in alternative trading systems and other non-exchange market centers where the customization and segmentation experience may be less transparent and objective.

While non-routable orders would not be permitted to execute against Route Peg Orders, the Exchange does not believe that the proposed rule changes would be designed to permit unfair discrimination between customers, brokers, or dealers. First, the Exchange believes this limited exception is constructed narrowly enough, based on rational and legitimate grounds, so that the compelling policy objectives, which are wholly consistent with the Act, can be realized. Second, the Exchange is not proposing to limit the type of User that can place routable orders, or that can place Route Peg Orders. So any disadvantage resulting from the limitation to executing against routable orders would not target particular segments of market participants, *per se,* but rather a particular type of market behavior. Therefore, the Exchange believes that not only would the proposed rule changes not be designed to permit unfair discrimination between customers, brokers, or dealers, the differentiation between routable and non-routable orders is an important element for the Route Peg Order to be able to achieve the objectives of protecting investors and the public interest and promoting just and equitable principles of trade.

Finally, because the Route Peg Order would be functionally similar to the Supplemental Order that is currently offered by the NASDAQ Stock Market LLC (''NASDAQ''),[13] the Route Peg Order would promote competition by enhancing EDGX's ability to compete with NASDAQ as well as other non-exchange market centers.

B. Self-Regulatory Organization's Statement on Burden on Competition

The proposed rule change does not impose any burden on competition that is not necessary or appropriate in furtherance of the purposes of the Act.

C. Self-Regulatory Organization's Statement on Comments on the Proposed Rule Changes Received From Members, Participants, or Others

The Exchange has not solicited, and does not intend to solicit, comments on this proposed rule change. The Exchange has not received any unsolicited written comments from members or other interested parties.

III. Date of Effectiveness of the Proposed Rule Changes and Timing for Commission Action

Within 45 days of the date of publication of this notice or within such longer period (i) as the Commission may designate up to 45 days of such date if it finds such longer period to be appropriate and publishes its reasons for so finding or (ii) as to which the self-regulatory organization consents, the Commission will:

(a) By order approve or disapprove such proposed rule changes; or

(b) Institute proceedings to determine whether the proposed rule changes should be disapproved.

IV. Solicitation of Comments

Interested persons are invited to submit written data, views, and arguments concerning the foregoing, including whether the proposed rule change is consistent with the Act. Comments may be submitted by any of the following methods:

[11] 15 U.S.C. 78f(b).

[12] 15 U.S.C. 78f(b)(5).

[13] *See* NASDAQ Rules 4751(f)(14), 4751(g) and 4757(a)(1)(D).

Electronic Comments

- Use the Commission's Internet comment form (*http://www.sec.gov/rules/sro.shtml*); or
- Send an email to *rule-comments@sec.gov*. Please include File No. SR–EDGX–2012–25 on the subject line.

Paper Comments

- Send paper comments in triplicate to Elizabeth M. Murphy, Secretary, Securities and Exchange Commission, 100 F Street NE., Washington, DC 20549–1090.

All submissions should refer to File No. SR–EDGX–2012–25. This file number should be included on the subject line if email is used. To help the Commission process and review your comments more efficiently, please use only one method. The Commission will post all comments on the Commission's Internet Web site (*http://www.sec.gov/rules/sro.shtml*). Copies of the submission, all subsequent amendments, all written statements with respect to the proposed rule change that are filed with the Commission, and all written communications relating to the proposed rule change between the Commission and any person, other than those that may be withheld from the public in accordance with the provisions of 5 U.S.C. 552, will be available for Web site viewing and printing in the Commission's Public Reference Room, 100 F Street NE., Washington, DC 20549, on official business days between the hours of 10 a.m. and 3 p.m. Copies of such filing also will be available for inspection and copying at the principal office of the Exchange. All comments received will be posted without change; the Commission does not edit personal identifying information from submissions. You should submit only information that you wish to make available publicly. All submissions should refer to File No. SR–EDGX–2012–25 and should be submitted on or before July 26, 2012.

For the Commission, by the Division of Trading and Markets, pursuant to delegated authority.[14]

Kevin M. O'Neill,

Deputy Secretary.

[FR Doc. 2012–16402 Filed 7–3–12; 8:45 am]

BILLING CODE 8011–01–P

[14] 17 CFR 200.30–3(a)(12).

SECURITIES AND EXCHANGE COMMISSION

[Release No. 34–67294; File No. SR–PHLX–2012–68]

Self-Regulatory Organizations; NASDAQ OMX PHLX LLC; Order Approving a Proposed Rule Change, as Modified by Amendment No. 1, To Accept Inbound Orders From NASDAQ OMX BX's New Options Market

June 28, 2012.

I. Introduction

On May 15, 2012, NASDAQ OMX PHLX LLC (''Exchange'' or ''PHLX'') filed with the Securities and Exchange Commission (''Commission''), pursuant to Section 19(b)(1) of the Securities Exchange Act of 1934 (''Act'')[1] and Rule 19b–4 thereunder,[2] a proposed rule change to accept inbound options orders routed by NASDAQ Options Services LLC (''NOS'') from NASDAQ OMX BX (''BX'') on a one year pilot basis in connection with the establishment of a new options market by BX. The proposed rule change was published for comment in the **Federal Register** on May 24, 2012.[3] The Commission received no comment letters regarding the proposed rule change. This order approves the proposed rule change.

II. Background

PHLX Rule 985(b) prohibits the Exchange or any entity with which it is affiliated from, directly or indirectly, acquiring or maintaining an ownership interest in, or engaging in a business venture with, an Exchange member or an affiliate of an Exchange member in the absence of an effective filing under Section 19(b) of the Act.[4] NOS is a registered broker-dealer that is a member of the Exchange, and currently provides to members of the Exchange optional routing services to other markets.[5] NOS is owned by NASDAQ OMX Group, Inc. (''NASDAQ OMX''), which also owns three registered securities exchanges—the Exchange, BX, and the NASDAQ Stock Market LLC (''NASDAQ'').[6] Thus, NOS is an affiliate of these exchanges.[7] Absent an effective filing, PHLX Rule 985(b) would prohibit NOS from being a member of the Exchange. The Commission initially approved NOS's affiliation with PHLX and its affiliated exchanges in connection with NASDAQ OMX's acquisition of PHLX and BX,[8] and NOS currently performs certain limited activities for each.[9] With the current proposed rule change, the Exchange seeks approval to permit NOS to perform a new function.

On May 1, 2012, BX filed a proposed rule change to establish a new BX options market (''BX Options''), which will be an electronic trading system that trades options.[10] As part of its proposal, BX proposed that NOS provide BX with outbound options routing services to other markets, including its affiliate PHLX. On May 15, 2012, the Exchange filed the instant proposal to allow the Exchange to accept such options orders routed inbound by NOS from BX on a one year pilot basis subject to certain limitations and conditions.[11]

III. Discussion and Commission Findings

After careful review, the Commission finds that the proposed rule change is consistent with the requirements of the Act and the rules and regulations thereunder applicable to a national securities exchange.[12] Specifically, the

[1] 15 U.S.C. 78s(b)(1).

[2] 17 CFR 240.19b–4.

[3] *See* Securities Exchange Act Release No. 67026 (May 18, 2012), 77 FR 31053 (''Notice''). The Commission notes that on May 17, 2012, the Exchange submitted Amendment No. 1 to the proposed rule change, to make technical amendments to Item 3.a of the Form 19b–4 and Item II of Exhibit 1.

[4] 15 U.S.C. 78s(b). PHLX Rule 985 also prohibits a PHLX member from being or becoming an affiliate of PHLX, or an affiliate of an entity affiliated with PHLX, in the absence of an effective filing under Section 19(b). *See* PHLX Rule 958(b)(1)(B).

[5] *See* PHLX Rule 1080(m)(iii). *See also* Notice, *supra* note 3, at 31054 n.5 and accompanying text.

[6] *See* Securities Exchange Act Release No. 58324 (August 7, 2008), 73 FR 46936 (August 12, 2008) (SR–BSE–2008–02; SR–BSE–2008–23; SR–BSE–2008–25; SR–BSECC–2008–01) (order approving NASDAQ OMX's acquisition of BX) (''BX Acquisition Order''); Securities Exchange Act Release No. 58179 (July 17, 2008), 73 FR 42874 (July 23, 2008) (SR–PHLX–2008–31) (order approving NASDAQ OMX's acquisition of PHLX) (''PHLX Acquisition Order'').

[7] *See id. See also* Notice, *supra* note 3, at 31054.

[8] *See* PHLX Acquisition Order, *supra* note 6, at 42877; and BX Acquisition Order, *supra* note 6, at 46944. *See also* Securities Exchange Act Release No. 57478 (March 12, 2008), 73 FR 14521, 14532–14533 (March 18, 2008) (SR–NASDAQ–2007–004 and SR–NASDAQ–2007–080) (initially approving NASDAQ's affiliation with NOS in connection with the establishment of the NASDAQ Options Market (''NOM'') (''NOM Approval Order'').

[9] *See, e.g.,* PHLX Rule 1080(m) (governing order routing by PHLX); and Securities Exchange Act Release No. 65399 (September 26, 2011), 76 FR 60955 (September 30, 2011) (SR–PHLX–2011–111) (approving routing of orders by NOS inbound to PHLX from NOM) (''PHLX Routing Order'').

[10] *See* Securities Exchange Act Release No. 66983 (May 14, 2012), 77 FR 29730 (May 18, 2012) (SR–BX–2012–030) (notice of propose rule change to adopt rules for the new BX options market) (''BX Options Proposal'') On June 26, 2012, the Commission approved the BX Options Proposal. *See* Securities Exchange Act Release No. 67256 (June 26, 2012) (''BX Options Approval'').

[11] *See* Notice, *supra* note 3.

[12] In approving this proposed rule change, the Commission has considered the proposed rule's

Continued

Commission finds that the proposed rule change is consistent with Section 6(b)(1) of the Act,[13] which requires, among other things, that a national securities exchange be so organized and have the capacity to carry out the purposes of the Act, and to comply and enforce compliance by its members and persons associated with its members, with the provisions of the Act, the rules and regulation thereunder, and the rules of the Exchange. Further, the Commission finds that the proposed rule change is consistent with Section 6(b)(5) of the Act,[14] which requires, among other things, that the rules of a national securities exchange be designed to prevent fraudulent and manipulative acts and practices; to promote just and equitable principles of trade; to foster cooperation and coordination with persons engaged in regulating, clearing, settling, and processing information with respect to, and facilitating transactions in securities; to remove impediments to and perfect the mechanism of a free and open market and a national market system; and, in general, to protect investors and the public interest. Section 6(b)(5) also requires that the rules of an exchange not be designed to permit unfair discrimination among customers, issuers, brokers, or dealers.

NOS will operate as a facility of BX that provides outbound options routing from BX Options to other market centers, subject to certain conditions.[15] The operation of NOS as a facility of BX providing outbound routing services from BX Options will be subject to BX oversight, as well as Commission oversight. BX will be responsible for ensuring that NOS's outbound options routing service is operated consistent with Section 6 of the Act and BX rules. In addition, BX must file with the Commission rule changes and fees relating to BX's outbound options routing services.

Recognizing that the Commission has previously expressed concern regarding the potential for conflicts of interest in instances where a member firm is affiliated with an exchange of which it is a member, the Exchange previously proposed, and the Commission approved, limitations and conditions on NOS's affiliation with the Exchange.[16] Also recognizing that the Commission has previously expressed concern regarding the potential for conflicts of interest in instances where a member firm is affiliated with an exchange to which it is routing orders, the Exchange proposed the following limitations and conditions to NOS's affiliation with the Exchange to permit the Exchange to accept inbound options orders that NOS routes in its capacity as a facility of BX: [17]

- First, the Exchange and the Financial Industry Regulatory Authority (''FINRA'') will maintain a Regulatory Contract, as well as an agreement pursuant to Rule 17d–2 under the Act (''17d–2 Agreement'').[18] Pursuant to the Regulatory Contract and the 17d–2 Agreement, FINRA will be allocated regulatory responsibilities to review NOS's compliance with certain PHLX rules.[19] Pursuant to the Regulatory Contract, however, the Exchange retains ultimate responsibility for enforcing its rules with respect to NOS.
- Second, FINRA will monitor NOS for compliance with PHLX's trading rules, and will collect and maintain certain related information.[20]
- Third, FINRA will provide a report to the Exchange's chief regulatory officer (''CRO''), on a quarterly basis, that: (i) Quantifies all alerts (of which the Exchange or FINRA is aware) that identify NOS as a participant that has potentially violated Commission or Exchange rules, and (ii) lists all investigations that identify NOS as a participant that has potentially violated Commission or PHLX rules.
- Fourth, the Exchange has in place PHLX Rule 985, which requires NASDAQ OMX, as the holding company owning both the Exchange and NOS, to establish and maintain procedures and internal controls reasonably designed to ensure that NOS does not develop or implement changes to its system, based on non-public information obtained regarding planned changes to the Exchange's systems as a result of its affiliation with the Exchange, until such information is available generally to similarly situated Exchange members, in connection with the provision of inbound options order routing to the Exchange.
- Fifth, the Exchange proposes that the routing of options orders from NOS to the Exchange, in NOS's capacity as a facility of BX be authorized for a pilot period of one year.

In the past, the Commission has expressed concern that the affiliation of an exchange with one of its members raises potential conflicts of interest, and the potential for unfair competitive advantage.[21] Although the Commission continues to be concerned about potential unfair competition and conflicts of interest between an exchange's self-regulatory obligations and its commercial interest when the exchange is affiliated with one of its members, for the reasons discussed below, the Commission believes that it is consistent with the Act to permit NOS, in its capacity as a facility of BX, to route options orders inbound to the Exchange on a pilot basis, subject to the limitations and conditions described above.[22]

The Commission believes that these limitations and conditions enumerated above will mitigate its concerns about potential conflicts of interest and unfair competitive advantage. In particular, the Commission believes that a non-

impact on efficiency, competition and capital formation. 15 U.S.C. 78c(f).

[13] 15 U.S.C. 78f(b)(1).

[14] 15 U.S.C. 78f(b)(5).

[15] *See* BX Options Approval, *supra* note 10, at Section II.D.

[16] *See* PHLX Acquisition Order, *supra* note 6, at 42887. *See also* Notice, *supra* note 3, at 31054 n.10 and accompanying text. In addition, the Exchange has authority to accept inbound orders that NOS routes in its capacity as a facility of NASDAQ, subject to certain limitations and conditions. *See* PHLX Routing Order, *supra* note 9, at 60956.

[17] *See* Notice, *supra* note 3, at 31054.

[18] 17 CFR 240.17d–2.

[19] NOS is also subject to independent oversight by FINRA, its designated examining authority, for compliance with financial responsibility requirements.

[20] Pursuant to the Regulatory Contract, both FINRA and the Exchange will collect and maintain all alerts, complaints, investigations and enforcement actions in which NOS (in its capacity as a facility of BX routing orders to the Exchange) is identified as a participant that has potentially violated applicable Commission or Exchange rules. The Exchange and FINRA will retain these records in an easily accessible manner in order to facilitate any potential review conducted by the Commission's Office of Compliance Inspections and Examinations. *See* Notice, *supra* note 3, at 31054 n.14.

[21] *See, e.g.,* Securities Exchange Act Release Nos. 54170 (July 18, 2006), 71 FR 42149 (July 25, 2006) (SR–NASDAQ–2006–006) (order approving NASDAQ's proposal to adopt NASDAQ Rule 2140, restricting affiliations between NASDAQ and its members); 53382 (February 27, 2006), 71 FR 11251 (March 6, 2006) (SR–NYSE–2005–77) (order approving the combination of the New York Stock Exchange, Inc. and Archipelago Holdings, Inc.); 58673 (September 29, 2008), 73 FR 57707 (October 3, 2008) (SR–Amex-2008–62 and SR–NYSE–2008–60) (order approving the combination of NYSE Euronext and the American Stock Exchange LLC); 59135 (December 22, 2008), 73 FR 79954 (December 30, 2008) (SR–ISE–2009–85) (order approving the purchase by ISE Holdings of an ownership interest in Direct Edge Holdings LLC); 59281 (January 22, 2009), 74 FR 5014 (January 28, 2009) (SR–NYSE–2008–120) (order approving a joint venture between NYSE and BIDS Holdings L.P.); 58375 (August 18, 2008), 73 FR 49498 (August 21, 2008) (File No. 10–182) (order granting the exchange registration of BATS Exchange, Inc.); 61698 (March 12, 2010), 75 FR 13151 (March 18, 2010) (File Nos. 10–194 and 10–196) (order granting the exchange registration of EDGX Exchange, Inc. and EDGA Exchange, Inc.); and 62716 (August 13, 2010), 75 FR 51295 (August 19, 2010) (File No. 10–198) (order granting the exchange registration of BATS–Y Exchange, Inc.).

[22] The Commission notes that these limitations and conditions are consistent with those previously approved by the Commission for other exchanges. *See, e.g.,* BX Options Approval, *supra,* note 10, at Section II.D.2.

affiliated SRO's oversight of NOS,[23] combined with a non-affiliated SRO's monitoring of NOS's compliance with the Exchange's rules and quarterly reporting to the Exchange, will help to protect the independence of the Exchange's regulatory responsibilities with respect to NOS. The Commission also believes that the Exchange's proposed amendments to PHLX Rule 985(b) are designed to ensure that NOS cannot use any information advantage it may have because of its affiliation with the Exchange. Furthermore, the Commission believes that the Exchange's proposal to allow NOS to route options orders inbound to the Exchange from BX, on a pilot basis, will provide the Exchange and the Commission an opportunity to assess the impact of any conflicts of interest of allowing an affiliated member of the Exchange to route orders inbound to the Exchange and whether such affiliation provides an unfair competitive advantage.

IV. Conclusion

It is therefore ordered, pursuant to Section 19(b)(2) of the Act,[24] that the proposed rule change, as modified by Amendment No. 1 (SR–PHLX–2012–68), be, and hereby is, approved.

For the Commission, by the Division of Trading and Markets, pursuant to delegated authority.[25]

Kevin M. O'Neill,

Deputy Secretary.

[FR Doc. 2012–16373 Filed 7–3–12; 8:45 am]

BILLING CODE 8011–01–P

[23] This oversight will be accomplished through the 17d–2 Agreement between FINRA and the Exchange and the Regulatory Contract. *See* Notice, *supra* note 3, at 31054 n.12 and accompanying text.

[24] 15 U.S.C. 78s(b)(2).

[25] 17 CFR 200.30–3(a)(12).

SECURITIES AND EXCHANGE COMMISSION

[Release No. 34–67292; File No. SR–NASDAQ–2012–073]

Self-Regulatory Organizations; The NASDAQ Stock Market LLC; Notice of Filing and Immediate Effectiveness of Proposed Rule Change To Modify Its Excess Order Fee

June 28, 2012.

Pursuant to Section 19(b)(1) of the Securities Exchange Act of 1934 (''Act''),[1] and Rule 19b–4 thereunder,[2] notice is hereby given that on June 25, 2012, The NASDAQ Stock Market LLC (''NASDAQ'' or the ''Exchange'') filed with the Securities and Exchange Commission (''Commission'') a proposed rule change as described in Items I, II and III below, which Items have been prepared by the Exchange. The Commission is publishing this notice to solicit comments on the proposed rule change from interested persons.

I. Self-Regulatory Organization's Statement of the Terms of the Substance of the Proposed Rule Change

NASDAQ proposes to institute an excess order fee. [sic] NASDAQ will implement the proposed change on July 2, 2012. The text of the proposed rule change is available at *http://nasdaq.cchwallstreet.com,* at NASDAQ's principal office, and at the Commission's Public Reference Room.

II. Self-Regulatory Organization's Statement of the Purpose of, and Statutory Basis for, the Proposed Rule Change

In its filing with the Commission, the self-regulatory organization included statements concerning the purpose of, and basis for, the proposed rule change and discussed any comments it received on the proposed rule change. The text of those statements may be examined at the places specified in Item III below. The Exchange has prepared summaries, set forth in sections A, B, and C below, of the most significant parts of such statements.

A. Self-Regulatory Organization's Statement of the Purpose of, and Statutory Basis for, the Proposed Rule Change

1. Purpose

NASDAQ recently submitted a proposed rule change to introduce an Excess Order Fee,[3] aimed at reducing inefficient order entry practices of certain market participants that place excessive burdens on the systems of NASDAQ and its members and that may negatively impact the usefulness and life cycle cost of market data. The fee is scheduled to be implemented on July 2, 2012. In general, the determination of whether to impose the fee on a particular market participant identifier (''MPID'') is made by calculating the ratio between (i) entered orders, weighted by the distance of the order from the national best bid or offer (''NBBO''), and (ii) orders that execute in whole or in part. The fee is imposed on MPIDs that have an ''Order Entry Ratio'' of more than 100.

Through this proposed rule change, the Exchange is modifying the parameters of the fee slightly to provide that all calculations under the rule establishing the fee will be based on orders received by NASDAQ during regular market hours (generally, 9:30 a.m. to 4:00 p.m.)[4] and will exclude orders received at other times, even if they execute during regular market hours. NASDAQ is making the change because the concerns about inefficient order entry practices that have prompted the fee are generally not present with regard to trading activity outside of regular market hours, when volumes are light. NASDAQ is also concerned that lower execution rates outside of regular market hours may skew calculations under the rule, such that an MPID that is considered acceptably efficient during regular market hours would be required to pay a fee under the rule due to its activity outside of regular market hours.

2. Statutory Basis

NASDAQ believes that the proposed rule change is consistent with the provisions of Section 6 of the Act,[5] in general, and with Sections 6(b)(4) and 6(b)(5) of the Act,[6] in particular, in that it provides for the equitable allocation of reasonable dues, fees and other charges among members and issuers and other persons using any facility or system which NASDAQ operates or controls, and is not designed to permit unfair discrimination between customers, issuers, brokers, or dealers.

As originally proposed and as modified by this proposed rule change, NASDAQ believes that the Order Entry Fee is reasonable because it is designed to achieve improvements in the quality of displayed liquidity and market data that will benefit all market participants. In addition, although the level of the fee may theoretically be very high, the fee is reasonable because market participants may readily avoid the fee by making improvements in their order entry practices that reduce the number of orders they enter, bring the prices of their orders closer to the NBBO, and/or increase the percentage of their orders that execute. The proposed change to the fee is reasonable because it will reduce the likelihood of the fee being imposed on an MPID that is considered acceptably efficient during regular market hours, when the impact of

[1] 15 U.S.C. 78s(b)(1).

[2] 17 CFR 240.19b–4.

[3] Securities Exchange Act Release No. 66951 (May 9, 2012), 77 FR 28647 (May 15, 2012) (SR–NASDAQ–2012–055).

[4] Regular market hours may be different in some circumstances, such as on the day after Thanksgiving, when regular market hours on all exchanges traditionally end at 1:00 p.m.

[5] 15 U.S.C. 78f.

[6] 15 U.S.C. 78f(b)(4) and (5).

inefficient trading on NASDAQ and other market participants is highest.

For similar reasons, the fee is consistent with an equitable allocation of fees, because although the fee may apply to only a small number of market participants, the fee would be applied to them in order to encourage better order entry practices that will benefit all market participants. Ideally, the fee will be applied to no one, because market participants will adjust their behavior in order to avoid the fee. The proposed change will increase the likelihood that the fee will not be imposed in unwarranted circumstances. Finally, NASDAQ believes that the fee is not unfairly discriminatory. Although the fee may apply to only a small number of market participants, it will be imposed because of the negative externalities that such market participants impose on others through inefficient order entry practices. The proposed modification to the fee is not unfairly discriminatory because although it will lessen the potential impact of the fee on MPIDs that are active outside of regular market hours, this change is rationally related to the fee's purpose of promoting efficient trading practices in conditions where inefficiency may negatively impact NASDAQ and other market participants.

B. Self-Regulatory Organization's Statement on Burden on Competition

NASDAQ does not believe that the proposed rule change will result in any burden on competition that is not necessary or appropriate in furtherance of the purposes of the Act, as amended. Specifically, NASDAQ believes that the fee will constrain market participants from pursuing certain inefficient and potentially abusive trading strategies. To the extent that this change may be construed as a burden on competition, NASDAQ believes that it is appropriate in order to further the purposes of Section 6(b)(5) of the Act.[7] The proposed change will lessen any burden on competition by removing from consideration orders entered outside of regular market hours, when concerns about the impact of inefficient trading on NASDAQ and other market participants are diminished.

C. Self-Regulatory Organization's Statement on Comments on the Proposed Rule Change Received From Members, Participants, or Others

Written comments were neither solicited nor received.

[7] 15 U.S.C. 78f(b)(5).

III. Date of Effectiveness of the Proposed Rule Change and Timing for Commission Action

The foregoing rule change has become effective pursuant to Section 19(b)(3)(A)(ii) of the Act.[8] At any time within 60 days of the filing of the proposed rule change, the Commission summarily may temporarily suspend such rule change if it appears to the Commission that such action is necessary or appropriate in the public interest, for the protection of investors, or otherwise in furtherance of the purposes of the Act. If the Commission takes such action, the Commission shall institute proceedings to determine whether the proposed rule should be approved or disapproved.

IV. Solicitation of Comments

Interested persons are invited to submit written data, views, and arguments concerning the foregoing, including whether the proposed rule change is consistent with the Act. Comments may be submitted by any of the following methods:

Electronic Comments

- Use the Commission's Internet comment form (*http://www.sec.gov/rules/sro.shtml*); or
- Send an email to *rule-comments@sec.gov.* Please include File Number SR–NASDAQ–2012–073 on the subject line.

Paper Comments

- Send paper comments in triplicate to Elizabeth M. Murphy, Secretary, Securities and Exchange Commission, 100 F Street NE., Washington, DC 20549–1090.

All submissions should refer to File Number SR–NASDAQ–2012–073. This file number should be included on the subject line if email is used.

To help the Commission process and review your comments more efficiently, please use only one method. The Commission will post all comments on the Commission's Internet Web site (*http://www.sec.gov/rules/sro.shtml*). Copies of the submission, all subsequent amendments, all written statements with respect to the proposed rule change that are filed with the Commission, and all written communications relating to the proposed rule change between the Commission and any person, other than those that may be withheld from the public in accordance with the provisions of 5 U.S.C. 552, will be available for Web site viewing and printing in the Commission's Public Reference Room on official business days between the hours of 10 a.m. and 3 p.m. Copies of the filing also will be available for inspection and copying at the principal offices of the Exchange. All comments received will be posted without change; the Commission does not edit personal identifying information from submissions. You should submit only information that you wish to make available publicly. All submissions should refer to File Number SR–NASDAQ–2012–073, and should be submitted on or before July 26, 2012.

[8] 15 U.S.C. 78s(b)(3)(a)(ii). [sic]

For the Commission, by the Division of Trading and Markets, pursuant to delegated authority.[9]

Kevin M. O'Neill,

Deputy Secretary.

[FR Doc. 2012–16372 Filed 7–3–12; 8:45 am]

BILLING CODE 8011–01–P

[9] 17 CFR 200.30–3(a)(12).

SECURITIES AND EXCHANGE COMMISSION

[Release No. 34–67301; File No. SR–NASDAQ–2012–077]

Self-Regulatory Organizations; The NASDAQ Stock Market LLC; Notice of Filing and Immediate Effectiveness of a Proposed Rule Change Correcting Various NASDAQ Options Market Rules

June 28, 2012.

Pursuant to Section 19(b)(1) of the Securities Exchange Act of 1934 (''Act''),[1] and Rule 19b–4 [2] thereunder, notice is hereby given that on June 26, 2012, The NASDAQ Stock Market LLC (''NASDAQ'') filed with the Securities and Exchange Commission (''SEC'' or ''Commission'') the proposed rule change as described in Items I, II and III, below, which Items have been prepared by NASDAQ. The Commission is publishing this notice to solicit comments on the proposed rule change from interested persons.

I. Self-Regulatory Organization's Statement of the Terms of Substance of the Proposed Rule Change

NASDAQ is filing with the Commission a proposal for the NASDAQ Options Market (''NOM'') to amend the following provisions: Chapter I, Section 3 to add additional exchanges to the list of those rules incorporated by reference; Chapter V, Section 3 to provide that market maker interest is cancelled during a halt;

[1] 15 U.S.C. 78s(b)(1).

[2] 17 CFR 240.19b–4.

Chapter VI, Section 1(d) to delete Attributable and Non-Attributable orders; Chapter VI, Section 1(e)(3) to provide that Minimum Quantity Orders are treated as having a time-in-force designation of Immediate or Cancel (''IOC''); Chapter VI, Section 1(e)(8), to provide that Intermarket Sweep Orders (''ISOs'') may have any time-in-force designation except WAIT; Chapter VI, Section 2(a) to provide that option contracts on certain fund shares or broad-based indexes may close as of 4:15 p.m.; Chapter VI, Section 6(a)(1) to make clear that Market Orders are accepted; Chapter VI, Section 11, to provide that routing is limited to System Securities; and Chapter VII, Section 12, Commentary .03 to update the reference to non-displayed trading interest. NASDAQ also proposes minor typographical changes to several rules, as explained further below.

The text of the proposed rule change is available from NASDAQ's Web site at *http://nasdaq.cchwallstreet.com/Filings/,* at NASDAQ's principal office, and at the Commission's Public Reference Room.

II. Self-Regulatory Organization's Statement of the Purpose of, and Statutory Basis for, the Proposed Rule Change

In its filing with the Commission, NASDAQ included statements concerning the purpose of and basis for the proposed rule change and discussed any comments it received on the proposed rule change. The text of these statements may be examined at the places specified in Item IV below. NASDAQ has prepared summaries, set forth in sections A, B, and C below, of the most significant aspects of such statements.

A. Self-Regulatory Organization's Statement of the Purpose of, and the Statutory Basis for, the Proposed Rule Change

1. Purpose

NASDAQ proposes to correct and clarify various provisions in NOM rules. Specifically, NASDAQ proposes to amend Chapter I, Section 3, to add to the list of those rules incorporated by reference. Currently, the rule refers to the Financial Industry Regulatory Authority (''FINRA''), but not to the Chicago Board Options Exchange nor to the New York Stock Exchange, which are now proposed to be added. NASDAQ believes that the proposed change is not controversial, because it merely codifies two additional exchanges into the provision that covers rules that are incorporated by reference.

NASDAQ proposes to amend Chapter V, Section 3, to provide that market maker interest is cancelled during a halt. Currently, this provision states that during a halt, the Exchange will maintain existing orders on the book, accept orders, and process cancels. However, Market Maker interest entered pursuant to the obligations contained in Chapter VII, Section 5 is cancelled. Therefore, NASDAQ proposes to add this language to the rule to more accurately reflect what occurs during a halt. Furthermore, it is not reasonable for a Market Maker to determine an option's price without taking into account the event that caused the halt in that option, and it is not beneficial to the market to maintain the quotes of Market Makers when an option halts. Therefore, NASDAQ believes that the proposed change is not controversial.

NASDAQ proposes to amend Chapter VI, Section 6(a)(1) to delete reference to a limit price to be clear that market orders are accepted. NASDAQ believes that this proposal is not controversial, because another rule already provides that market orders are accepted.[3] Specifically, it will now provide that all System orders shall indicate whether they are a call or put and buy or sell and a price, if any.

NASDAQ also proposes to amend Chapter VI, Section 1(e)(3), to provide that Minimum Quantity Orders are treated as having a time-in-force designation of Immediate or Cancel (''IOC''). The current language of Chapter VI, Section 1(e)(3) states that Minimum Quantity Orders may only be entered with a time-in-force designation of IOC; however, in actuality, Minimum Quantity Orders with any time-in-force designation may be entered and will be treated as IOC. Accordingly, the provision should say that Minimum Quantity Orders are treated as having a time-in-force designation of IOC, regardless of the time-in-force designation on the order. This has been the case since NOM launched in 2008 and NASDAQ recently realized that the language should be corrected. NASDAQ does not believe that this is a controversial change to NOM's rules, because it accurately described the operation of the System, and, NASDAQ notes that the System has been accepting more orders, which is useful to order entry firms. In addition, treating a Minimum Quantity Order as IOC regardless of the time-in-force designation on the order is akin to how NOM handles All-or-None orders today, which are very similar.[4]

NASDAQ proposes to amend Chapter VI, Section 1(d) to delete Attributable and Non-Attributable Orders. Attributable orders are orders that are designated for display (price and size) next to the Participant's MPID.[5] Non-Attributable Orders are orders that are entered by a Participant that is designated for display (price and size) on an anonymous basis in the order display service of the System. NOM no longer offers Attributable Orders, such that, as of September 29, 2011, all orders on NOM are non-attributable. NASDAQ does not believe that this is controversial, because Attributable Orders were rarely used on NOM.[6]

In addition, NASDAQ proposes to amend Chapter VI, Section 1(e)(8), to provide that ISOs may have any time-in-force designation except WAIT. The current language implies that all ISOs have a time-in-force designation of IOC, but that is not the case. ISOs can have a time-in-force of Day, GTC or IOC; ISOs that are marked as Day or GTC lose the ISO designation once posted on the book, meaning the order is no longer considered an ISO when posted on the book. If an entering firm cancels/replaces that resting Day ISO order, the replacement order cannot be marked as ISO. NASDAQ does not believe that this is controversial, because it is useful to order entry firms to be able to submit ISOs other than IOC and another exchange also permits this.[7]

NASDAQ also proposes to amend Chapter VI, Section 2(a) to provide that option contracts on *certain* fund shares or broad-based indexes will close as of 4:15 p.m., not all fund shares. Many options on fund shares stop trading at 4 p.m. both on NOM as well as other options exchanges.[8] Thus, the rule is more accurate, as proposed to be amended. NASDAQ does not believe that this is controversial, because NASDAQ provides product-specific notice of the trading hours on its Web site.

Further, NASDAQ proposes to amend Chapter VI, Section 11, to provide that routing is limited to System Securities. System Securities are all options that are currently trading on NOM pursuant

[3] *See* Chapter VI, Section 1(e)(5).

[4] *See* Securities Exchange Act Release No. 64983 (July 28, 2011), 76 FR 46869 (August 3, 2011) (SR–NASDAQ–2011–098).

[5] *See* NASDAQ Rule 4611(d), which, among other things, defines an MPID.

[6] Since NOM stopped offering them, no one has requested Attributable Orders. At least one other exchange, Phlx, does not have attributable orders.

[7] *See* CBOE Rule 6.53(p).

[8] *http://www.nasdaqtrader.com/dynamic/SymDir/options.txt* for a list of products traded on NOM with the indicator ''N'' for a 4 p.m. closing.

to Chapter IV. All other options are Non-System Securities.[9] At one time, NOM offered routing of Non-System Securities but has not offered such routing since November 30, 2011. NASDAQ notes that this routing feature was rarely used and was discontinued.[10] Currently, NOM only routes securities that are listed on NOM. Accordingly, the language relating to routing of Non-System Securities is being deleted. Specifically, NASDAQ proposes to delete Section 11(b), which pertains solely to the routing of Non-System Securities. In addition, the portion of Section 11(e) describing NASDAQ Options Services LLC's (''NOS'') role in routing Non-System Securities is being deleted. NASDAQ does not believe that this is controversial, because most exchanges do not offer this feature, the feature was rarely used and, in general, exchanges are not required to route orders in securities they do not offer for trading.

NASDAQ also proposes to amend Chapter VII, Section 12, Commentary .03 to delete the reference to non-displayed trading interest. NOM no longer has any order types with non-displayed interest; previously, NOM offered Discretionary Orders and Reserve Orders on NOM, but both have been eliminated.[11] NASDAQ notes that although NOM still offers Price Improving Orders, such orders do not have non-displayed interest.[12] Chapter VII, Section 12, Commentary .03 will now provide that respecting Price Improving Orders, the exposure requirement of subsection (i) is satisfied if the displayable portion of the order is displayed at its displayable price for one second.[13] NASDAQ does not believe that this is controversial, because it merely corrects rule language to be more specific to the only relevant order type that remains.

NASDAQ also proposes minor typographical changes to the following rules: Chapter III, Section 13(c) (Mandatory Systems Testing); Chapter III, Section 14(a) (Limit on Outstanding Uncovered Short Positions); Chapter III, Section 15(g) (Significant Business Transactions of Options Clearing Participants); Chapter IV, Section 6(g) (Series of Options Contracts Open for Trading); Chapter XII, Section 3(b) (Locked and Crossed Markets); and Chapter XIV, Section 3(b)(12) (Designation of a Broad-Based Index).

2. Statutory Basis

The Exchange believes that its proposal is consistent with Section 6(b) of the Act[14] in general, and furthers the objectives of Section 6(b)(5) of the Act[15] in particular, in that it is designed to promote just and equitable principles of trade by making various deletions and corrections that each contributes to the maintenance of fair and orderly markets. Adding reference to which exchange rules are incorporated by reference helps Participants better understand what rules apply, which should promote just and equitable principles of trade. Cancelling Market Maker interest during a trading halt helps Market Makers reasonably manage their risk, consistent with just and equitable principles of trade. Leaving a Market Maker's quote in the market during a halt could lead to dislocated prices when the security resumes trading after the halt, which would be confusing to investors. NASDAQ believes it is better to remove Market Maker quotes so that Market Makers can re-enter a fresh set of two-sided quotes that reflect the information that was disseminated during the halt. These fresh quotes should provide investors and the market as a whole with better and more accurate prices. Treating Minimum Quantity Orders as having a time-in-force designation of IOC also promotes just and equitable principles of trade by helping order entry firms manage their risk. Furthermore, allowing Minimum Quantity Orders to rest on the book potentially introduces complexity and confusion without adding value, because investors who might see Minimum Quantity Orders through a data feed may not understand why they are not able to trade with those orders. If an incoming order is smaller than the minimum quantity designated on the resting Minimum Quantity Order, it will not execute. Accordingly, NASDAQ believes that it is simpler for investors to interact with the market if Minimum Quantity Orders are treated as IOC.

In addition, making clearer that Market Orders are accepted should promote just and equitable principles of trade, by removing an inconsistency between two rules so firms know that such orders are permitted. Furthermore, accepting Market Orders in addition to Limit Orders provides investors with additional tools for market participation. Additional order choices helps Participants achieve their investment objectives when interacting with the market. At least one other exchange recognizes this and allows both limit and market orders.[16]

Deleting the terms Attributable Order and Non-Attributable Order also promotes just and equitable principles of trade by making clear that all orders are non-attributable. NASDAQ experienced no demand for the ability to provide attribution to orders. Neither consumers of NASDAQ data, nor the providers of orders requested attribution functionality. As such, NASDAQ removed this ability to simplify its systems and the related rules.

Permitting ISOs to have a time-in-force designation other than IOC assists order entry firms in managing ISOs, because some firms may seek to have such orders post on the book if they do not immediately execute, which promotes just and equitable principles of trade. Allowing a Participant to post an ISO, after having properly submitted the required ISOs to other exchanges with equal or better prices, should provide the market and investors with superior prices. It also helps the Participant who submitted the ISO to more accurately reflect the value they assign to the security designated on the order.

Specifying that option contracts on certain fund shares or broad-based indexes may close at 4:15 p.m. is intended to correct the rule to be clear that some such products close at 4 p.m., which should promote just and equitable principles of trade. Generally, the more information that is available to the market, the better it is for investors. In particular, the more accurate the information is, the better market participants can manage their objectives. Correcting this language will make it clear to investors that some products close at 4 p.m. and some close at 4:15 p.m. The ability to get the closing times for specific funds from the NOM Web site will provide participants with the precise information they need.

[9] *See* Chapter VI, Section 1(b).

[10] At least one other exchange only routes securities that trade on that exchange. *See e.g.,* Phlx Rule 1080(m).

[11] *See* Securities Exchange Act Release No. 65873 (December 2, 2011), 76 FR 76786 (December 8, 2011) (SR–NASDAQ–2011–164).

[12] ''Price Improving Orders'' are orders to buy or sell an option at a specified price at an increment smaller than the minimum price variation in the security. Price Improving Orders may be entered in increments as small as one cent. Price Improving Orders that are available for display shall be displayed at the minimum price variation in that security and shall be rounded up for sell orders and rounded down for buy orders. *See* Chapter VI, Section 1(e)(6).

[13] The order exposure requirement is that, with respect to orders routed to NOM, Options Participants may not execute as principal orders they represent as agent unless (i) agency orders are first exposed on NOM for at least one (1) second or (ii) the Options Participant has been bidding or offering on NOM for at least one (1) second prior to receiving an agency order that is executable against such bid or offer. *See* Chapter VII, Section 12.

[14] 15 U.S.C. 78f(b).

[15] 15 U.S.C. 78f(b)(5).

[16] *See e.g.,* Phlx Rule 1080(b).

Limiting routing to System Securities is common, such that eliminating the routing of Non-System Securities should not have a significant effect on Participants and correcting the rule makes this clear, which should promote just and equitable principles of trade. As stated above, it is common practice for options exchanges to only route orders for securities that are listed on the exchange. In fact, it is NASDAQ's understanding that NOM was the only exchange that offered routing for securities not listed on NOM. NOM experimented with the feature to explore whether there was an underserved customer segment and discovered that the feature often led to confusion and operational headaches for Participants and thus was rarely used.

Deleting the reference to non-displayed trading interest is merely a correction to address that previously available order types are no longer covered by this provisions, which provides better clarity, and thereby promotes just and equitable principles of trade. As discussed above, this reference was in place to reflect how NOM viewed the exposure rule in relation to Reserve Order, which were eliminated. NASDAQ inadvertently left this language in the rulebook which created confusion for members. Clarity with respect to the exposure rule provides Participants with a better understanding of how to comply with this rule.

Accordingly, NASDAQ believes that all of the changes proposed herein should promote just and equitable principles of trade, consistent with Section 6(b)(5).

B. Self-Regulatory Organization's Statement on Burden on Competition

The Exchange does not believe that the proposed rule change will impose any burden on competition not necessary or appropriate in furtherance of the purposes of the Act.

C. Self-Regulatory Organization's Statement on Comments on the Proposed Rule Change Received From Members, Participants, or Others

Written comments were neither solicited nor received.

III. Date of Effectiveness of the Proposed Rule Change and Timing for Commission Action

The Exchange believes that the foregoing proposed rule change may take effect upon filing with the Commission pursuant to Section 19(b)(3)(A) [17] of the Act and Rule 19b–4(f)(6)(iii) thereunder [18] because the foregoing proposed rule change does not: (i) Significantly affect the protection of investors or the public interest; (ii) impose any significant burden on competition; and (iii) become operative for 30 days from the date on which it was filed, or such shorter time as the Commission may designate.

At any time within 60 days of the filing of the proposed rule change, the Commission summarily may temporarily suspend such rule change if it appears to the Commission that such action is: (i) Necessary or appropriate in the public interest; (ii) for the protection of investors; or (iii) otherwise in furtherance of the purposes of the Act. If the Commission takes such action, the Commission shall institute proceedings to determine whether the proposed rule should be approved or disapproved.

IV. Solicitation of Comments

Interested persons are invited to submit written data, views, and arguments concerning the foregoing, including whether the proposed rule change is consistent with the Act. Comments may be submitted by any of the following methods:

Electronic Comments

- Use the Commission's Internet comment form (*http://www.sec.gov/rules/sro.shtml);* or
- Send an email to *rule-comments@sec.gov.* Please include File Number SR–NASDAQ–2012–077 on the subject line.

Paper Comments

- Send paper comments in triplicate to Elizabeth M. Murphy, Secretary, Securities and Exchange Commission, 100 F Street NE., Washington, DC 20549–1090.

All submissions should refer to File Number SR–NASDAQ–2012–077. This file number should be included on the subject line if email is used. To help the Commission process and review your comments more efficiently, please use only one method. The Commission will post all comments on the Commission's Internet Web site (*http://www.sec.gov/rules/sro.shtml*). Copies of the submission, all subsequent amendments, all written statements with respect to the proposed rule change that are filed with the Commission, and all written communications relating to the proposed rule change between the Commission and any person, other than those that may be withheld from the public in accordance with the provisions of 5 U.S.C. 552, will be available for Web site viewing and printing in the Commission's Public Reference Room, 100 F Street NE., Washington, DC 20549, on official business days between the hours of 10 a.m. and 3 p.m. Copies of the filing also will be available for inspection and copying at the principal office of the Exchange. All comments received will be posted without change; the Commission does not edit personal identifying information from submissions. You should submit only information that you wish to make available publicly. All submissions should refer to File Number SR–NASDAQ–2012–077 and should be submitted on or before July 26, 2012.

For the Commission, by the Division of Trading and Markets, pursuant to delegated authority.[19]

Kevin M. O'Neill,

Deputy Secretary.

[FR Doc. 2012–16377 Filed 7–3–12; 8:45 am]

BILLING CODE 8011–01–P

[17] 15 U.S.C. 78s(b)(3)(A).

[18] 17 CFR 240.19b–4(f)(6)(iii). In addition, Rule 19b–4(f)(6) requires a self-regulatory organization to give the Commission written notice of its intent to file the proposed rule change at least five business days prior to the date of filing of the proposed rule change, or such shorter time as designated by the Commission. The Exchange has satisfied this requirement.

[19] 17 CFR 200.30–3(a)(12).

SECURITIES AND EXCHANGE COMMISSION

[Release No. 34–67303; File No. SR–C2–2012–021]

Self-Regulatory Organizations; C2 Options Exchange, Incorporated; Notice of Filing and Immediate Effectiveness of a Proposed Rule Change Relating to the Exchange's Automated Improvement Mechanism

June 28, 2012.

Pursuant to Section 19(b)(1) of the Securities Exchange Act of 1934 (the ''Act''),[1] and Rule 19b–4 thereunder,[2] notice is hereby given that on June 26, 2012, C2 Options Exchange, Incorporated (the ''Exchange'' or ''C2'') filed with the Securities and Exchange Commission (the ''Commission'') the proposed rule change as described in Items I and II below, which Items have been prepared by the Exchange. The Exchange filed the proposal as a ''non-controversial'' proposed rule change pursuant to Section 19(b)(3)(A)(iii) of the Act [3] and Rule 19b–4(f)(6)

[1] 15 U.S.C. 78s(b)(1).

[2] 17 CFR 240.19b–4.

[3] 15 U.S.C. 78s(b)(3)(A)(iii).

thereunder,[4] which renders the proposed rule change effective upon filing with the Commission. The Commission is publishing this notice to solicit comments on the proposed rule change from interested persons.

I. Self-Regulatory Organization's Statement of the Terms of Substance of the Proposed Rule Change

The Exchange proposes to amend its rules related to its Automated Improvement Mechanism (''AIM''). The text of the proposed rule change is available on the Exchange's Web site (*http://www.c2exchange.com/Legal/*), at the Exchange's Office of the Secretary, and at the Commission's Public Reference Room.

II. Self-Regulatory Organization's Statement of the Purpose of, and Statutory Basis for, the Proposed Rule Change

In its filing with the Commission, the Exchange included statements concerning the purpose of and basis for the proposed rule change and discussed any comments it received on the proposed rule change. The text of these statements may be examined at the places specified in Item IV below. The Exchange has prepared summaries, set forth in sections A, B, and C below, of the most significant aspects of such statements.

A. Self-Regulatory Organization's Statement of the Purpose of, and the Statutory Basis for, the Proposed Rule Change

1. Purpose

In December 2009, the Commission approved adoption of C2's rules, including the AIM auction process.[5] AIM exposes certain orders electronically to an auction process to provide these orders with the opportunity to receive an execution at an improved price. The AIM auction is available only for orders that an Exchange Trading Permit Holder represents as agent (''Agency Order'') and for which a second order of the same size as the Agency Order (and on the opposite side of the market) is also submitted (effectively stopping the Agency Order at a given price).[6]

The Commission approved on a pilot basis the component of AIM that there is no minimum size requirement for orders to be eligible for the auction. In connection with the pilot program, the Exchange has submitted to the Commission reports providing AIM auction and order execution data, and the Exchange will continue to submit to the Commission these reports. Two one-year extensions to the pilot program have previously become effective.[7] The proposed rule change merely extends the duration of the pilot program until July 18, 2013. Extending the pilot for an additional year will allow the Commission more time to consider the impact of the pilot program on AIM order executions.

2. Statutory Basis

The Exchange believes the proposed rule change is consistent with the Act and the rules and regulations thereunder applicable to the Exchange and, in particular, the requirements of Section 6(b) of the Act.[8] Specifically, the Exchange believes the proposed rule change is consistent with the Section 6(b)(5)[9] requirements that the rules of an exchange be designed to promote just and equitable principles of trade, to prevent fraudulent and manipulative acts, to remove impediments to and to perfect the mechanism for a free and open market and a national market system, and, in general, to protect investors and the public interest.

In particular, the proposed rule change protects investors and the public interest by allowing for an extension of the AIM pilot program, and thus allowing additional time for the Commission to evaluate the AIM pilot program. The AIM pilot program will continue to allow smaller orders to receive the opportunity for price improvement pursuant to the AIM auction.

B. Self-Regulatory Organization's Statement on Burden on Competition

C2 does not believe that the proposed rule change will impose any burden on competition that is not necessary or appropriate in furtherance of the purposes of the Act.

C. Self-Regulatory Organization's Statement on Comments on the Proposed Rule Change Received From Members, Participants, or Others

The Exchange neither solicited nor received comments on the proposed rule change.

III. Date of Effectiveness of the Proposed Rule Change and Timing for Commission Action

The Exchange has filed the proposed rule change pursuant to Section 19(b)(3)(A)(iii) of the Act[10] and Rule 19b–4(f)(6) thereunder.[11] Because the proposed rule change does not: (i) Significantly affect the protection of investors or the public interest; (ii) impose any significant burden on competition; and (iii) by its terms, become operative prior to 30 days from the date on which it was filed, or such shorter time as the Commission may designate, if consistent with the protection of investors and the public interest, the proposed rule change has become effective upon filing with the Commission pursuant to Section 19(b)(3)(A) of the Act[12] and Rule 19b–4(f)(6)(iii) thereunder.[13]

The Exchange has requested that the Commission waive the 30-day operative delay period. The Commission believes that waiver of the 30-day operative delay period is consistent with the protection of investors and the public interest because such waiver will allow the AIM pilot program to continue without interruption. Accordingly, the Commission designates the proposed rule change operative upon filing with the Commission.[14]

At any time within 60 days of the filing of such proposed rule change, the Commission summarily may temporarily suspend such rule change if it appears to the Commission that such action is necessary or appropriate in the public interest, for the protection of investors, or otherwise in furtherance of the purposes of the Act. If the Commission takes such action, the Commission shall institute proceedings to determine whether the proposed rule should be approved or disapproved.

IV. Solicitation of Comments

Interested persons are invited to submit written data, views, and arguments concerning the foregoing, including whether the proposed rule

[4] 17 CFR 240.19b–4(f)(6).

[5] *See* Securities Exchange Act Release No. 61152 (December 10, 2009), 74 FR 66699 (December 16, 2009).

[6] The Exchange first activated AIM on October 17, 2011 for P.M.-settled options on the S&P 500 Index (SPXpm).

[7] *See* Securities Exchange Act Release Nos. 63238 (November 3, 2010), 75 FR 68844 (November 9, 2010) (SR–C2–2010–008); and 64929 (July 20, 2011), 76 FR 44635 (July 26, 2011) (SR–C2–2011–015).

[8] 15 U.S.C. 78f(b).

[9] 15 U.S.C. 78f(b)(5).

[10] 15 U.S.C. 78s(b)(3)(A)(iii).

[11] 17 CFR 240.19b–4(f)(6).

[12] 15 U.S.C. 78s(b)(3)(A).

[13] 17 CFR 240.19b–4(f)(6)(iii). In addition, Rule 19b–4(f)(6)(iii) requires the Exchange to give the Commission written notice of the Exchange's intent to file the proposed rule change, along with a brief description and text of the proposed rule change, at least five business days prior to the date of filing of the proposed rule change, or such shorter time as designated by the Commission. The Exchange has met this requirement.

[14] For purposes only of waiving the operative delay for this proposal, the Commission has considered the proposed rule's impact on efficiency, competition, and capital formation. *See* 15 U.S.C. 78c(f)

change is consistent with the Act. Comments may be submitted by any of the following methods:

Electronic Comments

- Use the Commission's Internet comment form (*http://www.sec.gov/rules/sro.shtml*); or
- Send an email to *rule-comments@sec.gov.* Please include File Number SR–C2–2012–021 on the subject line.

Paper Comments

- Send paper comments in triplicate to Elizabeth M. Murphy, Secretary, Securities and Exchange Commission, 100 F Street NE., Washington, DC 20549–1090.

All submissions should refer to File Number SR–C2–2012–021. This file number should be included on the subject line if email is used. To help the Commission process and review your comments more efficiently, please use only one method. The Commission will post all comments on the Commission's Internet Web site (*http://www.sec.gov/rules/sro.shtml*). Copies of the submission, all subsequent amendments, all written statements with respect to the proposed rule change that are filed with the Commission, and all written communications relating to the proposed rule change between the Commission and any person, other than those that may be withheld from the public in accordance with the provisions of 5 U.S.C. 552, will be available for Web site viewing and printing in the Commission's Public Reference Room, 100 F Street NE., Washington, DC 20549, on official business days between the hours of 10 a.m. and 3 p.m. Copies of such filing also will be available for inspection and copying at the principal office of the Exchange. All comments received will be posted without change; the Commission does not edit personal identifying information from submissions. You should submit only information that you wish to make available publicly. All submissions should refer to File Number SR–C2–2012–021 and should be submitted by July 26, 2012.

For the Commission, by the Division of Trading and Markets, pursuant to delegated authority.[15]

Kevin M. O'Neill,

Deputy Secretary.

[FR Doc. 2012–16470 Filed 7–3–12; 8:45 am]

BILLING CODE 8011–01–P

[15] 17 CFR 200.30–3(a)(12).

SECURITIES AND EXCHANGE COMMISSION

[Release No. 34–67302; File No. SR–CBOE–2012–061]

Self-Regulatory Organizations; Chicago Board Options Exchange, Incorporated; Notice of Filing and Immediate Effectiveness of a Proposed Rule Change Relating to the Exchange's Automated Improvement Mechanism

June 28, 2012.

Pursuant to Section 19(b)(1) of the Securities Exchange Act of 1934 (the ''Act''),[1] and Rule 19b–4 thereunder,[2] notice is hereby given that on June 26, 2012, the Chicago Board Options Exchange, Incorporated (''Exchange'' or ''CBOE'') filed with the Securities and Exchange Commission (''Commission'') the proposed rule change as described in Items I and II below, which Items have been prepared by the Exchange. The Exchange filed the proposal as a ''non-controversial'' proposed rule change pursuant to Section 19(b)(3)(A)(iii) of the Act[3] and Rule 19b–4(f)(6) thereunder,[4] which renders the proposed rule change effective upon filing with the Commission. The Commission is publishing this notice to solicit comments on the proposed rule change from interested persons.

I. Self-Regulatory Organization's Statement of the Terms of Substance of the Proposed Rule Change

The Exchange proposes to amend its rules related to its Automated Improvement Mechanism (''AIM''). The text of the proposed rule change is available on the Exchange's Web site (*http://www.cboe.com/AboutCBOE/CBOELegalRegulatoryHome.aspx*), at the Exchange's Office of the Secretary, and at the Commission's Public Reference Room.

II. Self-Regulatory Organization's Statement of the Purpose of, and Statutory Basis for, the Proposed Rule Change

In its filing with the Commission, the Exchange included statements concerning the purpose of and basis for the proposed rule change and discussed any comments it received on the proposed rule change. The text of these statements may be examined at the places specified in Item IV below. The Exchange has prepared summaries, set forth in sections A, B, and C below, of the most significant aspects of such statements.

A. Self-Regulatory Organization's Statement of the Purpose of, and the Statutory Basis for, the Proposed Rule Change

1. Purpose

In February 2006, CBOE obtained approval from the Commission to adopt the AIM auction process.[5] In March 2012, CBOE obtained approval from the Commission to adopt a substantially similar AIM auction process for Flexible Exchange Options (''FLEX Options'').[6] AIM exposes certain orders electronically to an auction process to provide these orders with the opportunity to receive an execution at an improved price. The AIM auction is available only for orders that an Exchange Trading Permit Holder represents as agent (''Agency Order'') and for which a second order of the same size as the Agency Order (and on the opposite side of the market) is also submitted (effectively stopping the Agency Order at a given price).

With respect to non-FLEX Options, the Commission approved two components of AIM on a pilot basis: (1) That there is no minimum size requirement for orders to be eligible for the auction; and (2) that the auction will conclude prematurely anytime there is a quote lock on the Exchange pursuant to Rule 6.45A(d).[7] With respect to FLEX Options, the Commission approved on a pilot basis the component of AIM that there is no minimum size requirement for orders to be eligible for the auction.[8] In connection with the pilot programs, the Exchange has submitted to the Commission reports providing detailed AIM auction and order execution data, and the Exchange will continue to submit to the Commission these reports. Six one-year extensions to the non-

[1] 15 U.S.C. 78s(b)(1).

[2] 17 CFR 240.19b–4.

[3] 15 U.S.C. 78s(b)(3)(A)(iii).

[4] 17 CFR 240.19b–4(f)(6).

[5] *See* Securities Exchange Act Release No. 53222 (February 3, 2006), 71 FR 7089 (February 10, 2006) (SR–CBOE–2005–060).

[6] *See* Securities Exchange Act Release No. 66702 (March 30, 2012), 77 FR 20675 (April 5, 2012) (SR–CBOE–2011–123). FLEX Options provide investors with the ability to customize basic option features including size, expiration date, exercise style, and certain exercise prices. The rules governing the trading of FLEX Options on the FLEX Request for Quote (RFQ) System platform are contained in Chapter XXIVA. The rules governing the trading of FLEX Options on the FLEX Hybrid Trading System platform are contained in Chapter XXIVB.

[7] A quote lock occurs when a CBOE Market-Maker's quote interacts with the quote of another CBOE Market-Maker (i.e. when internal quotes lock).

[8] The pilot for the FLEX AIM auction process was modeled after the existing pilot for non-FLEX Options, and included an expiration date of July 18, 2012 so that the FLEX pilot would coincide with the existing non-FLEX pilot.

FLEX pilot programs have previously become effective.[9] The proposed rule change merely extends the duration of the non-FLEX and FLEX pilot programs until July 18, 2013. Extending the pilots for an additional year will allow the Commission more time to consider the impact of the pilot programs on AIM order executions.

2. Statutory Basis

The Exchange believes the proposed rule change is consistent with the Act and the rules and regulations thereunder applicable to the Exchange and, in particular, the requirements of Section 6(b) of the Act.[10] Specifically, the Exchange believes the proposed rule change is consistent with the Section 6(b)(5) [11] requirements that the rules of an exchange be designed to promote just and equitable principles of trade, to prevent fraudulent and manipulative acts, to remove impediments to and to perfect the mechanism for a free and open market and a national market system, and, in general, to protect investors and the public interest.

In particular, the proposed rule change protects investors and the public interest by allowing for an extension of the AIM pilot programs, and thus allowing additional time for the Commission to evaluate the AIM pilot programs. The AIM pilot programs will continue to allow (1) smaller orders to receive the opportunity for price improvement pursuant to the AIM auction (for non-FLEX and FLEX Options), and (2) Agency Orders in AIM auctions that are concluded early because of quote lock on the Exchange to receive the benefit of the lock price (for non-FLEX Options).

B. Self-Regulatory Organization's Statement on Burden on Competition

CBOE does not believe that the proposed rule change will impose any burden on competition that is not necessary or appropriate in furtherance of the purposes of the Act.

C. Self-Regulatory Organization's Statement on Comments on the Proposed Rule Change Received From Members, Participants, or Others

The Exchange neither solicited nor received comments on the proposed rule change.

III. Date of Effectiveness of the Proposed Rule Change and Timing for Commission Action

The Exchange has filed the proposed rule change pursuant to Section 19(b)(3)(A)(iii) of the Act [12] and Rule 19b–4(f)(6) thereunder.[13] Because the proposed rule change does not: (i) Significantly affect the protection of investors or the public interest; (ii) impose any significant burden on competition; and (iii) by its terms, become operative prior to 30 days from the date on which it was filed, or such shorter time as the Commission may designate, if consistent with the protection of investors and the public interest, the proposed rule change has become effective upon filing with the Commission pursuant to Section 19(b)(3)(A) of the Act [14] and Rule 19b–4(f)(6)(iii) thereunder.[15]

The Exchange has requested that the Commission waive the 30-day operative delay period. The Commission believes that waiver of the 30-day operative delay period is consistent with the protection of investors and the public interest because such waiver will allow the AIM pilot programs to continue without interruption. Accordingly, the Commission designates the proposed rule change operative upon filing with the Commission.[16]

At any time within 60 days of the filing of such proposed rule change, the Commission summarily may temporarily suspend such rule change if it appears to the Commission that such action is necessary or appropriate in the public interest, for the protection of investors, or otherwise in furtherance of the purposes of the Act. If the Commission takes such action, the Commission shall institute proceedings to determine whether the proposed rule should be approved or disapproved.

IV. Solicitation of Comments

Interested persons are invited to submit written data, views, and arguments concerning the foregoing, including whether the proposed rule change is consistent with the Act. Comments may be submitted by any of the following methods:

Electronic Comments

- Use the Commission's Internet comment form (*http://www.sec.gov/rules/sro.shtml*); or
- Send an email to *rule-comments@sec.gov*. Please include File Number SR–CBOE–2012–061 on the subject line.

Paper Comments

- Send paper comments in triplicate to Elizabeth M. Murphy, Secretary, Securities and Exchange Commission, 100 F Street NE., Washington, DC 20549–1090.

All submissions should refer to File Number SR–CBOE–2012–061. This file number should be included on the subject line if email is used. To help the Commission process and review your comments more efficiently, please use only one method. The Commission will post all comments on the Commission's Internet Web site (*http://www.sec.gov/rules/sro.shtml*). Copies of the submission, all subsequent amendments, all written statements with respect to the proposed rule change that are filed with the Commission, and all written communications relating to the proposed rule change between the Commission and any person, other than those that may be withheld from the public in accordance with the provisions of 5 U.S.C. 552, will be available for Web site viewing and printing in the Commission's Public Reference Room, 100 F Street NE., Washington, DC 20549, on official business days between the hours of 10 a.m. and 3 p.m. Copies of such filing also will be available for inspection and copying at the principal office of the Exchange. All comments received will be posted without change; the Commission does not edit personal identifying information from submissions. You should submit only information that you wish to make available publicly. All submissions should refer to File Number SR–CBOE–2012–061 and should be submitted by July 26, 2012.

[9] *See* Securities Exchange Act Release Nos. 54147 (July 14, 2006), 71 FR 41487 (July 21, 2006) (SR–CBOE–2006–064); 56094 (July 18, 2007), 72 FR 40910 (July 25, 2007) (SR–CBOE–2007–080); 58196 (July 18, 2008), 73 FR 43803 (July 28, 2008) (SR–CBOE–2008–076) (in this filing, the Exchange agreed to provide to the Commission additional information relating to the AIM auctions each month in order to aid the Commission in its evaluation of the pilot program, which the Exchange will continue to do); 60338 (July 17, 2009), 74 FR 36803 (July 24, 2009) (SR–CBOE–2009–051); 62522 (July 16, 2010), 75 FR 43596 (July 26, 2010) (SR–CBOE–2010–067); and 64930 (July 20, 2011), 76 FR 44636 (July 26, 2011) (SR–CBOE–2011–066).

[10] 15 U.S.C. 78f(b).

[11] 15 U.S.C. 78f(b)(5).

[12] 15 U.S.C. 78s(b)(3)(A)(iii).

[13] 17 CFR 240.19b–4(f)(6).

[14] 15 U.S.C. 78s(b)(3)(A).

[15] 17 CFR 240.19b–4(f)(6)(iii). In addition, Rule 19b–4(f)(6)(iii) requires the Exchange to give the Commission written notice of the Exchange's intent to file the proposed rule change, along with a brief description and text of the proposed rule change, at least five business days prior to the date of filing of the proposed rule change, or such shorter time as designated by the Commission. The Exchange has met this requirement.

[16] For purposes only of waiving the operative delay for this proposal, the Commission has considered the proposed rule's impact on efficiency, competition, and capital formation. *See* 15 U.S.C. 78c(f).

For the Commission, by the Division of Trading and Markets, pursuant to delegated authority.[17]

Kevin M. O'Neill,

Deputy Secretary.

[FR Doc. 2012–16469 Filed 7–3–12; 8:45 am]

BILLING CODE 8011–01–P

SECURITIES AND EXCHANGE COMMISSION

[Release No. 34–67304; File No. SR–BATS–2012–023]

Self-Regulatory Organizations; BATS Exchange, Inc.; Notice of Filing of Proposed Rule Change To Amend BATS Rules 14.2 and 14.3 To Adopt Additional Listing Requirements for Reverse Merger Companies and To Align BATS Rules With the Rules of Other Self-Regulatory Organizations

June 28, 2012.

Pursuant to Section 19(b)(1) of the Securities Exchange Act of 1934 (the ''Act'' or the ''Exchange Act''),[1] and Rule 19b–4 thereunder,[2] notice is hereby given that on June 15, 2012, BATS Exchange, Inc. (the ''Exchange'' or ''BATS'') filed with the Securities and Exchange Commission (''Commission'') the proposed rule change as described in Items I and II below, which Items have been prepared by the Exchange. The Commission is publishing this notice to solicit comments on the proposed rule change from interested persons.

I. Self-Regulatory Organization's Statement of the Terms of Substance of the Proposed Rule Change

The Exchange is proposing to amend BATS Rules 14.2 and 14.3 to adopt additional listing requirements for a company that has become an Act reporting company by combining either directly or indirectly with a public shell, whether through a Reverse Merger, exchange offer, or otherwise (a ''Reverse Merger''). The text of the proposed rule addition is available at the Exchange's Web site at *http://www.batstrading.com,* at the principal office of the Exchange, and at the Commission's Public Reference Room.

II. Self-Regulatory Organization's Statement of the Purpose of, and Statutory Basis for, the Proposed Rule Change

In its filing with the Commission, the Exchange included statements concerning the purpose of and basis for the proposed rule change and discussed any comments it received on the proposed rule change. The text of those statements may be examined at the places specified in Item IV below. The Exchange has prepared summaries, set forth in Sections A, B, and C below, of the most significant aspects of such statements.

A. Self-Regulatory Organization's Statement of the Purpose of, and Statutory Basis for, the Proposed Rule Change

1. Purpose

The Exchange is proposing to adopt more stringent listing requirements for operating companies that become Exchange Act reporting companies through a Reverse Merger (''Reverse Merger Companies''). In a Reverse Merger, an existing public shell company merges with a private operating company in a transaction in which the shell company is the surviving legal entity. While the public shell company survives the merger, the shareholders of the private operating company typically hold a large majority of the shares of the public company after the merger and the management and board of the private company will assume those roles in the post-merger public company. The assets and business operations of the post-merger are primarily, if not solely, those of the former private operating company. The Exchange understands that private operating companies generally enter into Reverse Merger transactions to enable the company and its shareholders to sell shares in the public equity markets. By becoming a public reporting company via a Reverse Merger, a private operating company can access the public markets quickly and avoid the generally more expensive and lengthy process of going public by way of an initial public offering. While the public shell company is required to report the Reverse Merger in a Form 8–K filing with the Commission, generally there are no registration requirements under the Securities Act of 1933 (the ''Securities Act'')[3] at that point in time, as there would be for an IPO.

Significant regulatory concerns, including accounting fraud allegations, have arisen with respect to a number of Reverse Merger Companies in recent times. The Commission has taken direct action against Reverse Merger Companies. During 2011, the Commission suspended trading in the securities of numerous Reverse Merger Companies.[4] The Commission also recently brought an enforcement proceeding against an audit firm relating to its work for Reverse Merger Companies.[5] In addition, the Commission issued a bulletin on the risks of investing in Reverse Merger Companies, noting potential market and regulatory risks related to investing in Reverse Merger Companies.[6]

BATS Rule 14.2 provides the exchange with ''broad discretionary authority over the initial and continued listing of securities on the Exchange in order to maintain the quality of and public confidence in its market, to prevent fraudulent and manipulative acts and practices, to promote just and equitable principles of trade, and to protect investors and the public interest.'' BATS Rule 14.2 also provides that the Exchange may use such discretion to ''deny initial listing, apply additional or more stringent criteria for the initial or continued listing of particular securities, or suspend or delist particular securities based on any event, condition, or circumstance that exists or occurs that makes initial or continued listing of the securities on the Exchange inadvisable or unwarranted in the opinion of the Exchange, even though the securities meet all enumerated criteria for initial or continued listing on the Exchange.'' The Exchange may use this discretionary authority to increase the stringency of its stated listing criteria, but not to decrease their stringency.

In light of the well-documented concerns related to some Reverse Merger Companies described above, the Exchange believes that it is appropriate to codify in its rules specific requirements with respect to the initial listing qualification of Reverse Merger Companies. As proposed, a Reverse Merger Company would not be eligible for listing unless the combined entity had, immediately preceding the filing of the initial listing application:

(1) Traded for at least one year in the U.S. over-the-counter market, on another national securities exchange, or on a regulated foreign exchange following the consummation of the Reverse Merger and (i) in the case of a domestic issuer, filed with the Commission a form 8–K including all of the information required by Item 2.01(f) of Form 8–K, including all required audited financial statements; or (ii) in the case of a foreign private issuer, filed

[17] 17 CFR 200.30–3(a)(12).

[1] 15 U.S.C. 78s(b)(1).

[2] 17 CFR 240.19b–4.

[3] 15 U.S.C. 77a.

[4] *See* Letter from Mary L. Schapiro to Hon. Patrick T. McHenry, dated April 27, 2011 (''Schapiro Letter''), at pages 3–4.

[5] *See* Schapiro Letter at page 4.

[6] *See* ''Investor Bulletin: Reverse Mergers'' 2011–123.

the information described in (i) above on Form 20–F;

(2) Maintained on both an absolute and an average basis for a sustained period a minimum stock price of at least $4, but in no event for less than 30 of the most recent 60 trading days prior to each of the filing of the initial listing application and the date of the Reverse Merger Company's listing on the Exchange, except that a Reverse Merger Company that has satisfied the one-year trading requirement described in (1) above and has filed at least four annual reports with the Commission which each contain all required audited financial statements for a full fiscal year commencing after filing the information described in paragraph (1) above will not be subject to this price requirement; and

(3) Timely filed with the Commission all required reports since the consummation of the Reverse Merger, including the filing of at least one annual report containing audited financial statements for a full fiscal year commencing on a date after the date of filing with the Commission of the filing described in (1) above.

In addition, a Reverse Merger Company would be required to maintain on both an absolute and an average basis a minimum stock price of at least $4 through listing.

The Exchange believes that requiring a ''seasoning'' period prior to listing for Reverse Merger Companies should provide great assurance that the company's operations and financial reporting are reliable, and will also provide time for its independent auditor to detect any potential irregularities, as well as for the company to identify and implement enhancements to address any internal control weaknesses. The seasoning period will also provide time for regulatory and market scrutiny of the company and for any concerns that would preclude listing eligibility to be identified.

In addition, the Exchange believes that the proposed rule change will increase transparency to issuers and market participants with respect to the factors considered by the Exchange in assessing Reverse Merger Companies for listing and should generally reduce the risk of regulatory concerns with respect to these companies being discovered after listing. However, the Exchange notes that, while it believes that the proposed requirements would be a meaningful additional safeguard, it is not possible to guarantee that a Reverse Merger Company (or any other listed company) is not engaged in undetected accounting fraud or subject to other concealed and undisclosed legal or regulatory problems.

For purposes of the proposed amendment to BATS Rules 14.2(c) and 14.3(b)(9) (which will both be applicable to Reverse Merger Companies which qualify to list under BATS Rules) and as defined above, a Reverse Merger would mean any transaction whereby an operating company became an Exchange Act reporting company by combining either directly or indirectly with a shell company that was an Exchange Act reporting company, whether through a Reverse Merger, exchange offer, or otherwise. However, a Reverse Merger would not include the acquisition of an operating company by a listed company that qualified for initial listing under BATS Rule 14.2(b) (the Exchange's standard for companies whose business plan is to complete one or more acquisitions). In determining whether a company was a shell company, the Exchange would consider, among other factors: Whether the company was considered a ''shell company'' as defined in Rule 12b–2 under the Exchange Act; what percentage of the company's assets were active versus passive; whether the company generates revenues, and if so, whether the revenues were passively or actively generated; whether the company's expenses were reasonably related to the revenues being generated; how many employees worked in the company's revenue-generating business operations; how long the company had been without material business operations; and whether the company had publicly announced a plan to begin operating activities or generate revenues, including through a near-term acquisition or transaction.

In order to qualify for initial listing, a Reverse Merger Company would be required to comply with one of the initial listing standards set forth in BATS Rule 14.4 or 14.5 and the stock price and market value requirements of BATS Rule 14.8 or 14.9, as appropriate. Proposed Rules 14.2(c)(3) and 14.3(b)(9) would supplement and not replace any applicable requirements of Chapter XIV of BATS Rules. However, in addition to the otherwise applicable requirements of BATS Rules, a Reverse Merger Company would be eligible to submit an application for an initial listing only if it meets the additional criteria specified above.

The Exchange would have the discretion to impose more stringent requirements than those set forth above if the Exchange believed that it was warranted in the case of a particular Reverse Merger Company, based on, among other things, an inactive trading market in the Reverse Merger Company's securities, the existence of a low number of publicly held shares that were not subject to transfer restrictions, if the Reverse Merger Company had not had a Securities Act registration statement or other filing subjected to a comprehensive review by the Commission, or if the Reverse Merger Company had disclosed that it had material weaknesses in its internal controls which had been identified by management and/or the Reverse Merger Company's independent auditor and had not yet implemented an appropriate corrective action plan.

The Exchange reiterates that any Reverse Merger Company would have to comply with all listing standards set forth in BATS Rules, including corporate governance standards. The Exchange also notes that it will monitor the compliance with applicable BATS Rules by any Reverse Merger Company and will investigate any issues that indicate that a Reverse Merger Company is non-compliant with BATS Rules.

A Reverse Merger Company would not be subject to the requirements of proposed BATS Rules 14.2(c)(3) and 14.3(b)(9) if, in connection with its listing, it completes a firm commitment underwritten public offering where the gross proceeds to the Reverse Merger Company will be at least $40 million.[7] In that case, the Reverse Merger Company would only need to meet the initial listing standards. The Exchange believes that it is appropriate to exempt Reverse Merger Companies from the proposed rule where they are listing in conjunction with a sizable offering, as those companies would be subject to the same Commission review and due diligence by underwriters as a company listing in conjunction with its IPO or any other company listing in conjunction with an initial firm commitment underwritten public offering, so it would be inequitable to subject them to more stringent requirements.

The Exchange notes that the proposal is based on and consistent with recent Commission approvals of analogous rules for the New York Stock Exchange LLC (''NYSE''), NYSE Amex LLC (''AMEX'') and the NASDAQ Stock Market LLC (''Nasdaq'').[8]

[7] The prospectus and registration statement covering the offering would thus need to relate to the combined financial statements and operations of the Reverse Merger Company.

[8] *See* Securities Exchange Act Release Nos. 65709 (November 8, 2011), 76 FR 70795 (November 15, 2011) (File No. SR–NYSE–2011–38); 65710 (November 8, 2011), 76 FR 70790 (November 15, 2011) (File No. SR–NYSEAmex–2011–55); 65708 (November 8, 2011), 76 FR 70799 (November 15, 2011) (File No. SR–NASDAQ–2011–073).

2. Statutory Basis

The Exchange believes that its proposal is consistent with the requirements of the Act and the rules and regulations thereunder that are applicable to a national securities exchange, and, in particular, with the requirements of Section 6(b) of the Act.[9] Specifically, the proposed change is consistent with Section 6(b)(5) of the Act,[10] because it is designed to promote just and equitable principles of trade, to foster cooperation and coordination with persons engaged in regulating, clearing, settling, processing information with respect to, and facilitating transactions in securities, to remove impediments to and perfect the mechanism of a free and open market and a national market system, and, in general, to protect investors and the public interest. The Exchange believes that the proposed rule change is consistent with Section 6(b)(5) of the Act in that, as discussed above under the heading ''Purpose'', its purpose is to apply more stringent initial listing requirements to a category of companies that have raised regulatory concerns, thereby furthering the goal of protection of investors and the public interest. As set forth above, the proposal is based on and consistent with recent Commission approvals of analogous rules for NYSE, AMEX and Nasdaq.[11]

B. Self-Regulatory Organization's Statement on Burden on Competition

The Exchange does not believe that the proposed rule change will result in any burden on competition.

C. Self-Regulatory Organization's Statement on Comments on the Proposed Rule Change Received From Members, Participants, or Others

The Exchange has neither solicited nor received written comments on the proposed rule change.

III. Date of Effectiveness of the Proposed Rule Change and Timing for Commission Action

Within 45 days of the date of publication of this notice in the **Federal Register** or within such longer period (i) as the Commission may designate up to 90 days of such date if it finds such longer period to be appropriate and publishes its reasons for so finding or (ii) as to which the self-regulatory organization consents, the Commission will:

(A) By order approve or disapprove such proposed rule change, or

(B) Institute proceedings to determine whether the proposed rule change should be disapproved.

IV. Solicitation of Comments

Interested persons are invited to submit written data, views, and arguments concerning the foregoing, including whether the proposed rule change is consistent with the Act. Comments may be submitted by any of the following methods:

Electronic Comments

- Use the Commission's Internet comment form (*http://www.sec.gov/rules/sro.shtml*); or
- Send an email to *rule-comments@sec.gov.* Please include File Number SR–BATS–2012–023 on the subject line.

Paper Comments

- Send paper comments in triplicate to Elizabeth M. Murphy, Secretary, Securities and Exchange Commission, 100 F Street NE., Washington, DC 20549–1090.

All submissions should refer to File Number SR–BATS–2012–023. This file number should be included on the subject line if email is used. To help the Commission process and review your comments more efficiently, please use only one method. The Commission will post all comments on the Commission's Internet Web site (*http://www.sec.gov/rules/sro.shtml*). Copies of the submission, all subsequent amendments, all written statements with respect to the proposed rule change that are filed with the Commission, and all written communications relating to the proposed rule change between the Commission and any person, other than those that may be withheld from the public in accordance with the provisions of 5 U.S.C. 552, will be available for Web site viewing and printing in the Commission's Public Reference Room, 100 F Street NE., Washington, DC 20549, on official business days between the hours of 10 a.m. and 3 p.m. The text of the proposed rule change is available on the Commission's Web site at *http://www.sec.gov.* Copies of such filing also will be available for inspection and copying at the principal office of the Exchange. All comments received will be posted without change; the Commission does not edit personal identifying information from submissions. You should submit only information that you wish to make available publicly. All submissions should refer to File Number SR–BATS–2012–023, and should be submitted on or before July 26, 2012.

For the Commission, by the Division of Trading and Markets, pursuant to delegated authority.[12]

Kevin M. O'Neill,

Deputy Secretary.

[FR Doc. 2012–16440 Filed 7–3–12; 8:45 am]

BILLING CODE 8011–01–P

[9] 15 U.S.C. 78f(b).

[10] 15 U.S.C. 78f(b)(5).

[11] *See supra* note 8.

[12] 17 CFR 200.30–3(a)(12).

SECURITIES AND EXCHANGE COMMISSION

[Release No. 34–67300; File No. SR–EDGA–2012–24]

Self-Regulatory Organizations; EDGA Exchange, Inc.; Notice of Filing and Immediate Effectiveness of Proposed Rule Change Relating to Amendments to the EDGA Exchange, Inc. Fee Schedule

June 28, 2012.

Pursuant to Section 19(b)(1) of the Securities Exchange Act of 1934 (the ''Act''),[1] and Rule 19b–4 thereunder,[2] notice is hereby given that on June 19, 2012 the EDGA Exchange, Inc. (the ''Exchange'' or the ''EDGA'') filed with the Securities and Exchange Commission (''Commission'') the proposed rule change as described in Items I, II and III below, which items have been prepared by the self-regulatory organization. The Commission is publishing this notice to solicit comments on the proposed rule change from interested persons.

I. Self-Regulatory Organization's Statement of the Terms of Substance of the Proposed Rule Change

The Exchange proposes to amend its fees and rebates applicable to Members[3] of the Exchange pursuant to EDGA Rule 15.1(a) and (c). All of the changes described herein are applicable to EDGA Members. The text of the proposed rule change is available on the Exchange's Internet Web site at *http://www.directedge.com,* at the Exchange's principal office, and at the Public Reference Room of the Commission.

II. Self-Regulatory Organization's Statement of the Purpose of, and Statutory Basis for, the Proposed Rule Change

In its filing with the Commission, the self-regulatory organization included statements concerning the purpose of,

[1] 15 U.S.C. 78s(b)(1).

[2] 17 CFR 240.19b–4.

[3] A Member is any registered broker or dealer, or any person associated with a registered broker or dealer, that has been admitted to membership in the Exchange.

and basis for, the proposed rule change and discussed any comments it received on the proposed rule change. The text of these statements may be examined at the places specified in Item IV below. The self-regulatory organization has prepared summaries, set forth in sections A, B and C below, of the most significant aspects of such statements.

A. Self-Regulatory Organization's Statement of the Purpose of, and the Statutory Basis for, the Proposed Rule Change

Purpose

The Exchange proposes to add Flag DM to its fee schedule. Such flag will be yielded when Members add or remove liquidity in the discretionary (hidden) range using the Mid-Point Discretionary Order type (''MDO'').[4] The Exchange proposes to assess a charge of $0.0005 per share. In addition, the Exchange proposes appending Footnote 18 to Flag DM that states that trading activity in Flag DM does not count towards volume tiers.

The Exchange proposes to implement this amendment to its fee schedule on June 19, 2012.

Basis

The Exchange believes that the proposed rule changes are consistent with the objectives of Section 6 of the Act,[5] in general, and furthers the objectives of Section 6(b)(4),[6] in particular, as it is designed to provide for the equitable allocation of reasonable dues, fees and other charges among its Members and other persons using its facilities.

The Exchange believes that Flag DM is designed to provide for the equitable allocation of reasonable dues, fees and other charges among its Members and other customers using the Exchange's facilities. As stated in SR–EDGA–2012–22, MDOs represent a combination of two existing order types:

The MDO has two discrete components—a displayed portion that is pegged to the NBB or NBO, and a non-displayed portion which gives discretion to execute to the mid-point of the NBBO, subject to certain limits. The displayed, pegged portion of the MDO is conceptually similar to the Exchange's Pegged Order.[7] The non-displayed portion of the MDO is conceptually similar to the Exchange's Mid-Point Peg Order[8] (insofar as it would be eligible to execute in ½ cent increments at the mid-point of the NBBO). And the MDO as a whole is conceptually similar to the Exchange's Discretionary Order[9] (insofar as it would have displayed and undisplayed components, in both cases set to objectively determined parameters).

As such, the proposed rate for Flag DM is reflective of this concept. When the MDO adds liquidity like a displayed Pegged Order, the Exchange will continue to offer a rebate of $0.0003 per share and the order will continue to receive Flags B, V, Y, 3, or 4. Where the MDO adds or removes liquidity, including upon entry, within the Member's specified discretionary (hidden) range, then it behaves like a Non-Displayed or Discretionary Order, which is proposed to now be assessed a rate of $0.0005 per share. Today, without the addition of Flag DM, such Non-Displayed or Discretionary Orders would yield Flags HA or HR and be assessed a rate of $0.0010 per share or $0.0030 per share if the conditions in the volume tier are not satisfied by the Member.[10] Therefore, the Exchange believes that assessing a proposed charge of $0.0005 per share for Flag DM is equitable because it represents a blended or hybrid rate between the rates the Exchange currently assesses for Pegged Orders (rebate of $0.0003) and the rates for Non-Displayed Orders that add or remove liquidity (fee of $0.0010). In addition, the Exchange believes the proposed reduced rate from $0.0010 to $0.0005 for the Non-Displayed or discretionary aspect of the order is also equitable because it reflects the value the Exchange attributes to the MDO's contribution to price discovery, displayed depth of liquidity at the national best bid/offer, and the added benefit that the Member makes the order transparent as compared to a traditional Non-Displayed Order, which is hidden on the order book.

The Exchange proposes to exclude the volume generated from Flag DM from counting towards the volume tiers because a Member can potentially receive Flag DM if the Member either adds or removes liquidity using the MDO; therefore, the Exchange believes it would be less confusing to exclude these executions from volume tiers (which are typically achieved by counting just the executions that add liquidity) and the footnote on the fee schedule would contribute towards more clarity and transparency for Members.

In addition, the Exchange believes that the proposed rate is non-discriminatory because the charge will apply uniformly to all Members.

The Exchange also notes that it operates in a highly-competitive market in which market participants can readily direct order flow to competing venues if they deem fee levels at a particular venue to be excessive. The proposed rule change reflects a competitive pricing structure designed to incent market participants to direct their order flow to the Exchange. The Exchange believes that the proposed rates are equitable and non-discriminatory in that they apply uniformly to all Members. The Exchange believes the fees and credits remain competitive with those charged by other venues and therefore continue to be reasonable and equitably allocated to Members.

B. Self-Regulatory Organization's Statement on Burden on Competition

The proposed rule change does not impose any burden on competition that is not necessary or appropriate in furtherance of the purposes of the Act.

C. Self-Regulatory Organization's Statement on Comments on the Proposed Rule Change Received From Members, Participants, or Others

The Exchange has not solicited, and does not intend to solicit, comments on this proposed rule change. The Exchange has not received any unsolicited written comments from members or other interested parties.

III. Date of Effectiveness of the Proposed Rule Change and Timing for Commission Action

The foregoing rule change has become effective pursuant to Section 19(b)(3) of the Act[11] and Rule 19b–4(f)(2)[12] thereunder. At any time within 60 days of the filing of such proposed rule change, the Commission summarily may temporarily suspend such rule change if it appears to the Commission that such action is necessary or appropriate in the public interest, for the protection of

[4] *See* SR–EDGA–2012–22 (June 8, 2012) (As stated in the filing, MDOs to buy would be displayed at and pegged to the national best bid (the ''NBB''), with discretion to execute at prices up to and including the mid-point of the National Best Bid and Offer (the ''NBBO''). MDOs to sell would be displayed at and pegged to the national best offer (the ''NBO''), with discretion to execute at prices down to and including the mid-point of the NBBO. The displayed prices of MDOs would move in tandem with changes in the NBB (for buy orders) or the NBO (for sell orders). Moreover, MDOs would not independently establish or maintain an NBB or NBO; rather, the displayed prices of MDOs would be derived from the then current NBB or NBO).

[5] 15 U.S.C. 78f.

[6] 15 U.S.C. 78f(b)(4).

[7] As defined in Exchange Rule 11.5(c)(6).

[8] As defined in Exchange Rule 11.5(c)(7).

[9] As defined in Exchange Rule 11.5(c)(13).

[10] The Exchange notes that the rate of $0.0010 per share for Flags HA and HR are contingent upon a Member adding or removing greater than 1,000,000 shares hidden on a daily basis, measured monthly. Members that do not meet this minimum will be charged $0.0030 per share.

[11] 15 U.S.C. 78s(b)(3)(A).

[12] 17 CFR 19b–4(f)(2).

investors, or otherwise in furtherance of the purposes of the Act.

IV. Solicitation of Comments

Interested persons are invited to submit written data, views, and arguments concerning the foregoing, including whether the proposed rule change is consistent with the Act. Comments may be submitted by any of the following methods:

Electronic Comments

- Use the Commission's Internet comment form (*http://www.sec.gov/rules/sro.shtml*); or
- Send an email to *rule-comments@sec.gov.* Please include File Number SR–EDGA–2012–24 on the subject line.

Paper Comments

- Send paper comments in triplicate to Elizabeth M. Murphy, Secretary, Securities and Exchange Commission, 100 F Street NE., Washington, DC 20549–1090.

All submissions should refer to File Number SR–EDGA–2012–24. This file number should be included on the subject line if email is used. To help the Commission process and review your comments more efficiently, please use only one method. The Commission will post all comments on the Commission's Internet Web site (*http://www.sec.gov/rules/sro.shtml*). Copies of the submission, all subsequent amendments, all written statements with respect to the proposed rule change that are filed with the Commission, and all written communications relating to the proposed rule change between the Commission and any person, other than those that may be withheld from the public in accordance with the provisions of 5 U.S.C. 552, will be available for Web site viewing and printing in the Commission's Public Reference Room, 100 F Street NE., Washington, DC 20549, on official business days between the hours of 10 a.m. and 3 p.m. Copies of the filing also will be available for inspection and copying at the principal office of the Exchange. All comments received will be posted without change; the Commission does not edit personal identifying information from submissions. You should submit only information that you wish to make available publicly. All submissions should refer to File Number SR–EDGA–2012–24 and should be submitted on or before July 26, 2012.

For the Commission, by the Division of Trading and Markets, pursuant to delegated authority.[13]

Kevin M. O'Neill,

Deputy Secretary.

[FR Doc. 2012–16439 Filed 7–3–12; 8:45 am]

BILLING CODE 8011–01–P

SECURITIES AND EXCHANGE COMMISSION

[Release No. 34–67291; File No. SR–EDGA–2012–28]

Self-Regulatory Organizations; EDGA Exchange, Inc.; Notice of Filing of Proposed Rule Changes To Amend EDGA Rules To Add the Route Peg Order

June 28, 2012.

Pursuant to Section 19(b)(1) of the Securities Exchange Act of 1934 (the ''Act''),[1] and Rule 19b–4 thereunder,[2] notice is hereby given that on June 26, 2012, the EDGA Exchange, Inc. (the ''Exchange'' or ''EDGA'') filed with the Securities and Exchange Commission (the ''Commission'') the proposed rule change as described in Items II and III below, which items have been prepared by the self-regulatory organization. The Commission is publishing this notice to solicit comments on the proposed rule changes from interested persons.

I. Self-Regulatory Organization's Statement of the Terms of Substance of the Proposed Rule Changes

The Exchange proposes to amend Rule 11.5 to provide an additional order type, the Route Peg Order. In addition, the Exchange proposes to amend Rule 11.8 to describe the priority of the Route Peg Order relative to other orders on the EDGA Book.

The text of the proposed rule changes are attached as Exhibit 5 [3] and are available on the Exchange's Web site at *www.directedge.com,* at the Exchange's principal office, at the Public Reference Room of the Commission, and on the Commission's Web site at *www.sec.gov.*

II. Self-Regulatory Organization's Statement of the Purpose of, and Statutory Basis for, the Proposed Rule Changes

In its filing with the Commission, the Exchange included statements concerning the purpose of, and basis for, the proposed rule changes and discussed any comments it received on the proposed rule changes. The text of these statements may be examined at the places specified in Item IV below. The self-regulatory organization has prepared summaries, set forth in Sections A, B and C below, of the most significant aspects of such statements.

A. Self-Regulatory Organization's Statement of the Purpose of, and Statutory Basis for, the Proposed Rule Changes

Purpose

The Exchange proposes to amend Rule 11.5(c) to add a new subparagraph (14) that describes a Route Peg Order. A Route Peg Order would be a non-displayed limit order eligible for execution at the national best bid (the ''NBB'') for Route Peg Orders to buy, and at the national best offer (the ''NBO'', and together with the NBB, the ''NBBO'') for Route Peg Orders to sell, against routable orders [4] that are equal to or less than the size of the Route Peg Order. Thus, the Route Peg Order would only be eligible for execution at a price that matches the NBB for buy orders, and the NBO for sell orders. The Route Peg Order would be a passive, resting order designed exclusively to provide liquidity; therefore, it would not be permitted to take liquidity.

An incoming order that has been designated as eligible for routing would be able to interact with Route Peg Orders. Such an order would first be matched against orders other than Route Peg Orders in price/time priority in accordance with Rule 11.8(a)(2)(A)–(C). If any portion of the incoming order remained unexecuted, only then would such order be eligible to execute against Route Peg Orders.[5] Thus, the Route Peg Order is intended only to provide liquidity in the event that a marketable order would otherwise route to another destination.

As mentioned *supra,* Route Peg Orders would only trade with orders that are equal to or smaller in quantity than the original order quantity of the Route Peg Order. If a Route Peg Order were partially executed, it would be able to execute against orders that were

---

[13] 17 CFR 200.30–3(a)(12).

[1] 15 U.S.C. 78s(b)(1).

[2] 17 CFR 240.19b–4.

[3] The Commission notes that the Exhibit 5 is attached to the filing, but is not attached to this Notice.

[4] Orders that are not designated for routing are not executable against Route Peg Orders because Users entering non-routable orders typically expect to post liquidity on EDGA or seek to execute immediately against the EDGA displayed quote or attempt to ferret out hidden liquidity at or within the NBBO, *e.g.,* through an Immediate-or-Cancel Order type. By contrast, the Route Peg Order would be designed for Users to interact with other Users that seek to access liquidity at the NBBO, and that employ routable orders to access such liquidity at a range of trading venues.

[5] The Exchange is proposing to [sic] The Exchange proposes to codify this principle in proposed new paragraph (a)(2)(D) of Rule 11.8.

larger than the remaining balance of the order, but those orders would still need to be equal to or smaller than the original order quantity of the Route Peg Order.[6] The following example illustrates how this would work: Assume Member A places a Route Peg Order to buy 500 shares, and an incoming order to sell executes against the Route Peg Order at the NBB for 300 shares. That would leave Member A with a remaining balance of 200 shares to buy. Another incoming order to sell 400 shares would be eligible to execute against Member A's balance, for 200 shares, because the size of its order would be less than the original size of Member A's order. If, however, the incoming order were to sell 600 shares, it would not execute against the Route Peg Order because the size of the order would be greater than the original size of Member A's order. In that event, such order would be routed externally. It should be noted, however, that if there were another Route Peg Order on the Book, behind Member A's order in time priority, for, say, 1000 shares, the order to sell 600 shares would execute against that second Route Peg Order.

The Exchange elected to design the System in this manner, as opposed to alternatives such as measuring incoming orders against the aggregate size of all Route Peg Orders then on the Book, in order to avoid the possibility of a single block-sized order potentially clearing all the liquidity on the Book attributable to Route Peg Orders.

Route Peg Orders would be able to be entered, cancelled and cancelled/replaced prior to and during Regular Trading Hours.[7] Route Peg Orders would be eligible for execution in a given security during Regular Trading Hours, except that, even after the commencement of Regular Trading Hours, Route Peg Orders would not be eligible for execution (1) in the opening cross, and (2) until such time that regular session orders in that security could be posted to the EDGA Book.[8] A Route Peg Order would not execute at a price that is inferior to a Protected Quotation,[9] and would not be permitted to execute if the NBBO were locked or crossed. Any and all remaining, unexecuted Route Peg Orders would be cancelled at the conclusion of Regular Trading Hours.

The Route Peg Order would provide Members with an additional means to post stable trading interest at the NBB and NBO. The purpose of the Route Peg Order is to encourage Members to further enhance the depth of liquidity at the NBBO on the Exchange. The Exchange believes that if the Route Peg Order became widely used, Members seeking to access liquidity at the NBBO would be more motivated to direct their orders to EDGA because they would have a heightened expectation of the availability of liquidity at the NBBO. In addition, a User[10] whose order executed against a Route Peg Order would be able to obtain an execution at the NBB or NBO while minimizing the risk that incremental latency associated with routing the order to an away destination may result in an inferior execution.

Basis

The Exchange believes that the proposed rule changes are consistent with Section 6(b) of the Act[11] and further the objectives of Section 6(b)(5) of the Act,[12] in that they are designed to prevent fraudulent and manipulative acts and practices, to promote just and equitable principles of trade, to foster cooperation and coordination with persons engaged in facilitating transactions in securities, and to remove impediments to and perfect the mechanisms of a free and open market and a national market system, and, in general, to protect investors and the public interest. Moreover, the Exchange believes that the proposed rule changes are not designed to permit unfair discrimination between customers, issuers, brokers, or dealers.

The benefits to investors of enhanced depth of liquidity at the NBBO in today's market structure cannot be understated. The Route Peg Order is designed to incentivize Users to place greater liquidity at the NBBO, thereby promoting more favorable and efficient executions for the benefit of public customers. It would do so by (1) offering liquidity providers a means to use the Exchange to post larger limit orders that are only executable at the NBBO and that do not disclose their trading interest to other market participants in advance of execution; (2) offering market participants seeking to access liquidity a greater expectation of market depth at the NBBO than may currently be the case; and (3) offering more predictable executions at the NBBO for Users by reducing the risk that incremental latency associated with routing an order to an away destination may result in an inferior execution. Thus, by providing an additional means by which market participants can be encouraged to post liquidity at the NBBO on the Exchange, which would add depth and support to the NBBO on the Exchange and mitigate the negative effects of market fragmentation, the proposed rule changes would promote just and equitable principles of trade and remove impediments to and perfect the mechanism of a free and open market and national market system. Moreover, the proposed rule changes would protect investors and the public interest by increasing the probability of an execution on the Exchange at the NBBO in the event that the order would otherwise be shipped to an external destination and potentially miss an execution at the NBBO while in transit.

The Exchange believes, however, that the benefits to be derived from Route Peg Orders would only be realized if Route Peg Orders only interact with orders eligible for routing. Routable orders are typically characteristic of public customers, both retail and institutional (colloquially referred to as well as ''natural'' investors), who are concerned with executing at the best price. On the other hand, non-routable orders typically expect to post liquidity on the Book or seek to execute immediately, such as via an Immediate-or-Cancel Order, against the Exchange's best displayed bid or offer or to ferret out hidden liquidity at or inside the NBBO (colloquially referred to as well as ''pinging''). Professional traders, in particular, are more apt to submit, and often immediately cancel, ''pinging'' orders, as reflected in generally higher message-to-trade ratios. The Exchange believes this type of order behavior, while it may have its own business purposes, would not be suitable to interact with Route Peg Orders simply because Users would be reticent to post liquidity via Route Peg Orders given the uncertain, and therefore difficult to manage, exposure to executions against orders attributable to professional traders. Indeed, we believe potential

[6] If a Route Peg Order were partially executed, the remaining portion of the order would continue to be eligible for execution, but it would be assigned a new time priority and new timestamp after each partial execution, until either the remaining size of the order is exhausted or it is cancelled. Assigning a new timestamp after each partial execution would allow for a kind of rotating priority of execution for Users who place Route Peg Orders. The Exchange is proposing to codify this principle in Rule 11.8(a)(5) and proposed new subparagraph (a)(7) of Rule 11.8.

[7] As defined in Rule 1.5(y).

[8] To illustrate, for stocks listed on the New York Stock Exchange LLC (the ''NYSE''), regular session orders can be posted to the EDGA Book upon the dissemination by the responsible Securities Information Processor (''SIP'') of an opening print in that stock on the NYSE. Conversely, for stocks listed on, say, the NASDAQ Stock Market LLC, regular session orders can be posted to the EDGA Book upon the dissemination of the NBBO by the responsible SIP in that stock.

[9] As defined in Rule 1.5(v).

[10] As defined in Rule 1.5(ee).

[11] 15 U.S.C. 78f(b).

[12] 15 U.S.C. 78f(b)(5).

liquidity providers would be more apt to provide liquidity in alternative trading systems and other non-exchange market centers where the customization and segmentation experience may be less transparent and objective.

While non-routable orders would not be permitted to execute against Route Peg Orders, the Exchange does not believe that the proposed rule changes would be designed to permit *unfair* discrimination between customers, brokers, or dealers. First, the Exchange believes this limited exception is constructed narrowly enough, based on rational and legitimate grounds, so that the compelling policy objectives, which are wholly consistent with the Act, can be realized. Second, the Exchange is not proposing to limit the type of User that can place routable orders, or that can place Route Peg Orders. So any disadvantage resulting from the limitation to executing against routable orders would not target particular segments of market participants, *per se,* but rather a particular type of market behavior. Therefore, the Exchange believes that not only would the proposed rule changes not be designed to permit unfair discrimination between customers, brokers, or dealers, the differentiation between routable and non-routable orders is an important element for the Route Peg Order to be able to achieve the objectives of protecting investors and the public interest and promoting just and equitable principles of trade.

Finally, because the Route Peg Order would be functionally similar to the Supplemental Order that is currently offered by the NASDAQ Stock Market LLC (''NASDAQ''),[13] the Route Peg Order would promote competition by enhancing EDGA's ability to compete with NASDAQ as well as other non-exchange market centers.

B. Self-Regulatory Organization's Statement on Burden on Competition

The proposed rule change does not impose any burden on competition that is not necessary or appropriate in furtherance of the purposes of the Act.

C. Self-Regulatory Organization's Statement on Comments on the Proposed Rule Changes Received From Members, Participants, or Others

The Exchange has not solicited, and does not intend to solicit, comments on this proposed rule change. The Exchange has not received any unsolicited written comments from members or other interested parties.

[13] *See* NASDAQ Rules 4751(f)(14), 4751(g) and 4757(a)(1)(D).

III. Date of Effectiveness of the Proposed Rule Changes and Timing for Commission Action

Within 45 days of the date of publication of this notice or within such longer period (i) as the Commission may designate up to 45 days of such date if it finds such longer period to be appropriate and publishes its reasons for so finding or (ii) as to which the self-regulatory organization consents, the Commission will:

(a) By order approve or disapprove such proposed rule changes; or

(b) Institute proceedings to determine whether the proposed rule changes should be disapproved.

IV. Solicitation of Comments

Interested persons are invited to submit written data, views, and arguments concerning the foregoing, including whether the proposed rule change is consistent with the Act. Comments may be submitted by any of the following methods:

Electronic Comments

- Use the Commission's Internet comment form (*http://www.sec.gov/rules/sro.shtml*); or
- Send an email to *rule-comments@sec.gov.* Please include File No. SR–EDGA–2012–28 on the subject line.

Paper Comments

- Send paper comments in triplicate to Elizabeth M. Murphy, Secretary, Securities and Exchange Commission, 100 F Street NE., Washington, DC 20549–1090.

All submissions should refer to File No. SR–EDGA–2012–28. This file number should be included on the subject line if email is used. To help the Commission process and review your comments more efficiently, please use only one method. The Commission will post all comments on the Commission's Internet Web site (*http://www.sec.gov/rules/sro.shtml*). Copies of the submission, all subsequent amendments, all written statements with respect to the proposed rule change that are filed with the Commission, and all written communications relating to the proposed rule change between the Commission and any person, other than those that may be withheld from the public in accordance with the provisions of 5 U.S.C. 552, will be available for Web site viewing and printing in the Commission's Public Reference Room, 100 F Street NE., Washington, DC 20549, on official business days between the hours of 10 a.m. and 3 p.m. Copies of such filing also will be available for inspection and copying at the principal office of the Exchange. All comments received will be posted without change; the Commission does not edit personal identifying information from submissions. You should submit only information that you wish to make available publicly. All submissions should refer to File No. SR–EDGA–2012–28 and should be submitted on or before July 26, 2012.

For the Commission, by the Division of Trading and Markets, pursuant to delegated authority.[14]

Kevin M. O'Neill,

Deputy Secretary.

[FR Doc. 2012–16403 Filed 7–3–12; 8:45 am]

BILLING CODE 8011–01–P

[14] 17 CFR 200.30–3(a)(12).

SECURITIES AND EXCHANGE COMMISSION

[Release No. 34–67299; File No. SR–EDGA–2012–25]

Self-Regulatory Organizations; EDGA Exchange, Inc.; Notice of Filing and Immediate Effectiveness of Proposed Rule Change Relating to New Simultaneous Routing Functionality

June 28, 2012.

Pursuant to Section 19(b)(1) of the Securities Exchange Act of 1934 (the ''Act''),[1] and Rule 19b–4 thereunder,[2] notice is hereby given that on June 19, 2012, EDGA Exchange, Inc. (the ''Exchange'' or ''EDGA'') filed with the Securities and Exchange Commission (''Commission'') the proposed rule change as described in Items I and II below, which items have been prepared by the Exchange. The Commission is publishing this notice to solicit comments on the proposed rule change from interested persons.

I. Self-Regulatory Organization's Statement of the Terms of Substance of the Proposed Rule Change

EDGA proposes to modify existing routing options contained in EDGA Rule 11.9(b)(3) to provide Users[3] with new simultaneous routing functionality as a means by which Members' orders may be routed to certain destinations on the System routing table. The text of the proposed rule change is attached as Exhibit 5 and is available on the Exchange's Web site at *www.directedge.com,* at the Exchange's

[1] 15 U.S.C. 78s(b)(1).

[2] 17 CFR 240.19b–4.

[3] As defined in Rule 1.5(ee).

principal office, and at the Public Reference Room of the Commission.

II. Self-Regulatory Organization's Statement of the Purpose of, and Statutory Basis for, the Proposed Rule Change

In its filing with the Commission, the Exchange included statements concerning the purpose of, and basis for, the proposed rule change and discussed any comments it received on the proposed rule change. The text of these statements may be examined at the places specified in Item IV below. The self-regulatory organization has prepared summaries, set forth in Sections A, B and C below, of the most significant aspects of such statements.

A. Self-Regulatory Organization's Statement of the Purpose of, and the Statutory Basis for, the Proposed Rule Change

1. Purpose

The Exchange's current list of routing options is codified in Rule 11.9(b)(3). In this filing, the Exchange proposes to amend paragraph (3) of Rule 11.9(b) to indicate that the Exchange reserves the right to route orders both sequentially and simultaneously. This amendment allows for simultaneous routing to certain destinations on the System routing table. With respect to Rules 11.9(b)(3)(a), (b), (h), (m), and (t), specifically, the Exchange currently sends orders to certain destinations on the System routing table only in a sequential manner. For example, if an order cannot be filled after checking for available shares on the Exchange's book, the Exchange will route such order to certain destinations on the System routing table one at a time until all such destinations are exhausted, the order is cancelled, or the order is filled. As a result of the proposed change in functionality, which would allow such orders to be sent either sequentially or simultaneously, language in paragraph (3) of Rule 11.9(b) will be amended to account for the fact that the Exchange reserves the right to ''route orders simultaneously or sequentially''. Other routing strategies in Rule 11.9(b) are already written broadly enough to allow for both sequential or simultaneous routing of orders, which the Exchange operates in a discretionary manner depending on the type of venues with which the order flow is routed to.[4] Therefore, this amendment simply deletes the word ''sequentially'' from Rules 11.9(b)(3)(a), (b), (h), (m), and (t) so that the Exchange has the discretion to do simultaneous or sequential routing as to these strategies.

Simultaneous routing is an improvement on the current sequential manner in which orders are filled because it allows an order to be broken up into child orders to be sent to multiple destinations at one time instead of to one venue after another. Doing so has the potential to improve an order's fill rate, as well as reduce latency. The Exchange believes that the proposed introduction of this functionality will provide Users with increased access to multiple sources of liquidity and greater flexibility in routing orders, without having to develop their own complicated routing strategies. The Exchange also believes the proposed modification will provide additional specificity to the Exchange's rulebook regarding routing strategies and will further enhance transparency with respect to Exchange routing offerings.

The Exchange will notify its Members in an information circular of (a) the exact implementation date of this rule change, which will be no later than July 31, 2012; and (b) the manner in which certain routing options may function (*i.e.,* sequentially or simultaneously), in an effort to afford Members with transparency regarding the same.

2. Basis

The Exchange believes that the proposed rule change is consistent with Section 6(b)(5) of the Act,[5] which requires the rules of an exchange to promote just and equitable principles of trade, to remove impediments to and perfect the mechanism of a free and open market and a national market system and, in general, to protect investors and the public interest. More specifically, the Exchange believes that the proposed rule change will improve an order's fill rate as well as reduce latency. The proposed rule change will thus contribute to perfecting the mechanism of a free and open market and a national market system, and is also consistent with the protection of investors and the public interest. The proposed rule change and resulting information circulars that the Exchange will issue will afford Members transparency into how various routing options may function (whether simultaneous or sequential).

B. Self-Regulatory Organization's Statement on Burden on Competition

The Exchange does not believe that the proposed rule change will impose any burden on competition that is not necessary or appropriate in furtherance of the purposes of the Act.

C. Self-Regulatory Organization's Statement on Comments on the Proposed Rule Change Received From Members, Participants, or Others

The Exchange has neither solicited nor received written comments on the proposed rule change.

III. Date of Effectiveness of the Proposed Rule Change and Timing for Commission Action

Because the proposed rule change does not (i) Significantly affect the protection of investors or the public interest; (ii) impose any significant burden on competition; and (iii) become operative for 30 days from the date on which it was filed, or such shorter time as the Commission may designate if consistent with the protection of investors and the public interest, the proposed rule change has become effective pursuant to Section 19(b)(3)(A) of the Act[6] and Rule 19b–4(f)(6) thereunder.[7]

A proposed rule change filed pursuant to Rule 19b–4(f)(6) under the Act[8] normally does not become operative for 30 days after the date of its filing. However, Rule 19b–4(f)(6)[9] permits the Commission to designate a shorter time if such action is consistent with the protection of investors and the public interest. The Exchange has asked the Commission to waive the 30-day operative delay so that the proposal may become operative immediately upon filing, noting that similar functionality is already offered by other market centers.[10] The Commission believes that waiving the 30-day operative delay is consistent with the protection of investors and the public interest.

[4] Regarding simultaneous routing, the Exchange may, for example, use a pro-rata mechanism to allocate the number of shares from the parent order (i.e., a child order) among multiple dark pools where each applicable venue will be assigned a relative weight based on a variety of factors including, but not limited to, latency, liquidity and transaction costs.

[5] 15 U.S.C. 78f(b)(5).

[6] 15 U.S.C. 78s(b)(3)(A).

[7] 17 CFR 240.19b–4(f)(6). As required under Rule 19b–4(f)(6)(iii), the Exchange provided the Commission with written notice of its intent to file the proposed rule change along with a brief description and the text of the proposed rule change, at least five business days prior to the date of filing of the proposed rule change, or such shorter time as designated by the Commission.

[8] 17 CFR 240.19b–4(f)(6).

[9] 17 CFR 240.19b–4(f)(6).

[10] *See* BATS Rule 11.13(a)(3)(B)–(D) (routing strategies listed in these rules may be routed simultaneously).

Therefore, the Commission designates the proposal operative upon filing.[11]

At any time within 60 days of the filing of the proposed rule change, the Commission summarily may temporarily suspend such rule change if it appears to the Commission that such action is necessary or appropriate in the public interest, for the protection of investors, or otherwise in furtherance of the purposes of the Act.

IV. Solicitation of Comments

Interested persons are invited to submit written data, views, and arguments concerning the foregoing, including whether the proposed rule change is consistent with the Act. Comments may be submitted by any of the following methods:

Electronic Comments

- Use the Commission's Internet comment form (*http://www.sec.gov/rules/sro.shtml*); or
- Send an email to *rule-comments@sec.gov.* Please include File Number SR–EDGA–2012–25 on the subject line.

Paper Comments

- Send paper comments in triplicate to Elizabeth M. Murphy, Secretary, Securities and Exchange Commission, 100 F Street NE., Washington, DC 20549–1090.

All submissions should refer to File Number SR–EDGA–2012–25. This file number should be included on the subject line if email is used. To help the Commission process and review your comments more efficiently, please use only one method. The Commission will post all comments on the Commission's Internet Web site (*http://www.sec.gov/rules/sro.shtml*). Copies of the submission, all subsequent amendments, all written statements with respect to the proposed rule change that are filed with the Commission, and all written communications relating to the proposed rule change between the Commission and any person, other than those that may be withheld from the public in accordance with the provisions of 5 U.S.C. 552, will be available for Web site viewing and printing in the Commission's Public Reference Room, 100 F Street NE., Washington, DC 20549, on official business days between the hours of 10 a.m. and 3 p.m. Copies of the filing also will be available for inspection and copying at the principal office of the Exchange. All comments received will be posted without change; the Commission does not edit personal identifying information from submissions. You should submit only information that you wish to make available publicly. All submissions should refer to File Number SR–EDGA–2012–25 and should be submitted on or before July 26, 2012.

For the Commission, by the Division of Trading and Markets, pursuant to delegated authority.[12]

Kevin M. O'Neill,

Deputy Secretary.

[FR Doc. 2012–16436 Filed 7–3–12; 8:45 am]

BILLING CODE 8011–01–P

[11] For purposes only of waiving the 30-day operative delay, the Commission has considered the proposed rule's impact on efficiency, competition, and capital formation. *See* 15 U.S.C. 78c(f).

[12] 17 CFR 200.30–3(a)(12).

SECURITIES AND EXCHANGE COMMISSION

[Release No. 34–67308; File No. SR–BOX–2012–005]

Self-Regulatory Organizations; BOX Options Exchange LLC; Notice of Filing and Immediate Effectiveness of Proposed Rule Change To Amend the Fee Schedule for Trading on BOX

June 28, 2012.

Pursuant to Section 19(b)(1) of the Securities Exchange Act of 1934 (''Act'' or ''Exchange Act'')[1] and Rule 19b–4 thereunder,[2] notice is hereby given that on June 25, 2012, BOX Options Exchange LLC (the ''Exchange'') filed with the Securities and Exchange Commission (''Commission'') the proposed rule change as described in Items I, II and III below, which Items have been prepared by the Exchange. The Exchange filed the proposed rule change pursuant to Section 19(b)(3)(A)(ii) of the Act,[3] and Rule 19b–4(f)(2) thereunder,[4] which renders the proposal effective upon filing with the Commission. The Commission is publishing this notice to solicit comments on the proposed rule change from interested persons.

[1] 15 U.S.C. 78s(b)(1).

[2] 17 CFR 240.19b–4.

[3] 15 U.S.C. 78s(b)(3)(A)(ii).

[4] 17 CFR 240.19b–4(f)(2).

I. Self-Regulatory Organization's Statement of the Terms of Substance of the Proposed Rule Change

BOX Options Exchange LLC (the ''Exchange'') proposes to amend its Fee Schedule for trading on its options facility, BOX Market LLC (''BOX''). While changes to the fee schedule pursuant to this proposal will be effective upon filing, the changes will become operative on July 1, 2012. The text of the proposed rule change is available from the principal office of the Exchange, at the Commission's Public Reference Room and also on the Exchange's Internet Web site at *http://boxexchange.com.*

II. Self-Regulatory Organization's Statement of the Purpose of, and Statutory Basis for, the Proposed Rule Change

In its filing with the Commission, the Exchange included statements concerning the purpose of and basis for the proposed rule change and discussed any comments it received on the proposed rule change. The text of these statements may be examined at the places specified in Item IV below. The Exchange has prepared summaries, set forth in Sections A, B, and C below, of the most significant aspects of such statements.

A. Self-Regulatory Organization's Statement of the Purpose of, and Statutory Basis for, the Proposed Rule Change

1. Purpose

The Exchange proposes to amend its Fee Schedule. While changes to the fee schedule pursuant to this proposal will be effective upon filing, the changes will become operative on July 1, 2012.

The Exchange proposes to amend Market Maker Exchange Fees for Auction Transaction responses in Section I of its fee schedule to implement a tiered schedule to provide potentially discounted fees based upon a Market Maker's monthly average daily volume (''ADV''). Market Makers will be assessed a per contract execution fee based on ADV considering all of their executed transactions on BOX as calculated at the end of each month. All executions for the month will be charged the same per contract fee according to the Market Maker's ADV, according to the table below:

Market maker monthly ADV	Per contract fee
150,001 contracts and greater	$0.13
100,001 contracts to 150,000 contracts	0.16
50,001 contracts to 100,000 contracts	0.18
10,001 contracts to 50,000 contracts	0.25
5,001 contracts to 10,000 contracts	0.30
1 contract to 5,000 contracts	0.35

This proposal will potentially lower Market Maker fees for all transactions on BOX. In particular, this may potentially lower Market Maker fees for Improvement Orders in the Price Improvement Period (''PIP'') and Responses in the Solicitation or Facilitation Auction mechanisms on BOX, allowing Market Makers to more effectively compete for customer order flow in these mechanisms. Currently, Market Makers may achieve a discounted Exchange Fee rate in these Auction Transactions as their ADV in Auction Transactions (those transactions executed through the PIP, Solicitation Auction mechanism, and Facilitation Auction mechanism) increases past certain break points (e.g., 20,000 contracts, 50,000 contracts, etc.). The proposed change would provide Market Makers a potentially discounted Exchange Fee rate for all of their BOX trades as their monthly ADV for all transactions on BOX reaches certain break points.

The Exchange believes that providing this potential discount for Market Makers in connection with their ADV considering all of their transactions on BOX rather than only their Auction Transactions will allow additional Market Makers to benefit from the potential discounts in the tiered Exchange Fee schedule, and will provide an incentive for Market Makers to potentially provide greater liquidity on BOX. The Exchange also believes this may provide an incentive for Market Makers to provide more competition in BOX Auction Transactions.

The Exchange also proposes to amend the Market Maker Tiered Fee Schedule to modify the break point tiers and increase the per contract fees for Market Makers with monthly ADV of 50,000 contracts or less. Currently, Market Makers with monthly ADV of up to 10,000 contracts pay an Exchange Fee of $0.25, and those with ADV of 10,001 to 50,000 contracts pay $0.20. As set forth in the table above, the Exchange proposes to increase the per contract Exchange Fee for Market Makers with monthly ADV of 10,001 to 50,000 contracts to $0.25, increase the per contract Exchange Fee to $0.30 for Market Makers with monthly ADV of 5,001 to 10,000 contracts, and increase the per contract Exchange Fee to $0.35 for Market Makers with monthly ADV of 5,000 contracts or less.

The Exchange proposes to amend the Tiered Fee Schedule for Participants that initiate Auction Transactions (''Initiating Participants''). Currently, Initiating Participants pay a per contract fee, regardless of account type, that is reduced as the Participant's monthly ADV in Auction Transactions increases past certain break points. Currently, Initiating Participants pay $0.25 per contract for monthly ADV up to 20,000 contracts. The Exchange proposes to amend the tiers and increase the fees for those Participants with monthly ADV in Auction Transactions of 10,000 or less. The Exchange proposes to maintain the $0.25 fee for Initiating Participants with monthly ADV of 10,001 to 20,000 contracts. Additionally, the Exchange proposes to increase the fee to $0.30 for monthly ADV of 5,001 to 10,000 contracts, and to $0.35 for monthly ADV of 5,000 contracts or less.

The proposed tiered fee schedule for Initiating Participants is set forth below:

Initiating participant monthly ADV in auction transactions	Per contract fee (all account types)
150,001 contracts and greater	$0.10
100,001 contracts to 150,000 contracts	0.12
50,001 contracts to 100,000 contracts	0.15
20,001 contracts to 50,000 contracts	0.17
10,001 contracts to 20,000 contracts	0.25
5,001 contracts to 10,000 contracts	0.30
1 contract to 5,000 contracts	0.35

Finally, the Exchange proposes to increase the fee in Section I of the Fee Schedule for Broker-Dealer Improvement Orders in the PIP and Responses in the Solicitation and Facilitation Auction Mechanisms from $0.25 to $0.35.

2. Statutory Basis

The Exchange believes that the proposal is consistent with the requirements of Section 6(b) of the Act,[5] in general, and Section 6(b)(4) of the Act,[6] in particular, in that it provides for the equitable allocation of reasonable dues, fees, and other charges among BOX Options Participants and other persons using its facilities. The impact of the proposal upon the net fees paid by any particular market participant will depend on multiple variables, including whether the Participant is most active on the BOX Book or within Auction Transactions on BOX.

With regard to Market Maker exchange fees, the Exchange believes it is reasonable, equitable, and not unfairly discriminatory for BOX Market Makers to have the opportunity to benefit from potentially discounted fees based on all of their transactions on BOX. The Exchange believes that the proposed tiered and potentially discounted fees for Market Makers that on a daily basis, trade an average daily volume (as calculated at the end of the month) of more than 5,000 contracts on BOX represents a fair and equitable allocation of reasonable dues, fees, and other charges as it is aimed at incentivizing these participants to provide a greater volume of liquidity. The Exchange believes that giving incentives for this activity will result in increased liquidity on BOX, and within its auction mechanisms, to the benefit of

[5] 15 U.S.C. 78f(b).

[6] 15 U.S.C. 78f(b)(4).

all market participants. The increased liquidity also benefits all investors by deepening the BOX liquidity pool, supporting the quality of price discovery, promoting market transparency and improving investor protection. The Exchange believes that the volume based discounts such as the reducing tiered execution fee proposed for Market Makers are reasonable and equitable because they are open to all Market Makers on an equal basis and provide discounts that are reasonably related to the value of an exchange's market quality associated with higher levels of market activity, such as higher levels of liquidity provision and introduction of higher volumes of orders into the price and volume discovery processes. Finally, Market Makers have obligations that other Participants do not. In particular, they must maintain active two-sided markets in the classes in which they are appointed, and must meet certain minimum quoting requirements. As such, the Exchange believes it is reasonable and appropriate that Market Makers be charged fees on BOX that may be comparably lower than other market participants in certain circumstances, when they provide greater volumes of liquidity to the market.[7]

The Exchange believes the Market Maker fees proposed, including an increase in the fees at the bottom of the tiered schedule for Market Makers with ADV less than 10,000 contracts, are reasonable, equitable, and not unfairly discriminatory. BOX operates within a highly competitive market in which market participants can readily direct order flow to any other competing venue if they deem fees at a particular venue to be excessive. Additionally, Market Makers may choose on which markets they undertake their associated obligations and fees are a factor in their decision. The proposed Market Maker fees are intended to attract additional liquidity to BOX by offering market participants incentives to submit their quotes and orders. The Exchange believes that we are providing Market Makers a greater opportunity to receive discounted fees for their BOX transactions. To help offset the potentially discounted fees for Market Makers providing greater liquidity, the Exchange believes it is reasonable and equitable to increase the fees for Market Makers with ADV less than 10,000 contracts as these Market Makers are not providing the same level of liquidity to the market.

The Exchange believes it is equitable and non-discriminatory to provide Initiating Participants the proposed fees in a tiered structure to provide potential discount related to participation in BOX Auction Transactions. The proposed fees related to trading activity in BOX Auction Transactions are available to all BOX Options Participants that initiate Auction Transactions, and they may choose to trade on BOX to take advantage of the discounted fees for doing so, or not. The Exchange also believes the proposed fees for BOX Participants initiating Auction Transactions to be reasonable.[8] Further, the Exchange believes Participants benefit from the opportunity to aggregate their trading in the BOX Facilitation and Solicitation Auction mechanisms with their PIP transactions to attain a discounted fee tier. The tiered fee structure proposed for trading in the BOX auction mechanisms aims to attract order flow to BOX, providing greater potential liquidity within the overall BOX market, and its auction mechanisms, to the benefit of all BOX market participants.

The Exchange believes that providing a volume discount to Options Participants that initiate auctions on customer orders is appropriate to provide an incentive to BOX Participants to submit their customer orders to BOX, particularly into the PIP for potential price improvement. Such a discount is necessary to limit the exposure that Initiating Participants will have to liquidity removal fees, because as Initiating Participants they will be adding liquidity and will be charged a fee should their principal order execute against the customer order in any BOX Auction Transaction. Further, the Exchange believes it is reasonable and equitable to increase the fees paid by Participants that have monthly Auction Transaction ADV of 10,000 contracts or less because the fees will be comparable to that of Market Makers trading on BOX.

Further, the Exchange believes the proposed $0.35 fee per executed contract for Broker-Dealer Improvement Orders in the PIP and Responses in the Solicitation and Facilitation Auction Mechanisms to be equitable, reasonable, and not unfairly discriminatory. The Exchange believes the proposed fee is reasonable because the Exchange does not charge broker-dealers fees other than transaction fees (e.g., ongoing systems access fees, ongoing fees for access to BOX market data, or fees related to order cancellation) as other exchanges. Additionally, the proposed increase in trading fees charged to broker-dealer proprietary accounts is designed to be comparable to the costs that such accounts would be charged at competing venues.[9] Further, the Exchange believes that these participants that add liquidity on BOX will not be impaired by this proposed increase to fees on broker-dealer proprietary accounts. Broker-Dealer proprietary trading draws on BOX system resources and results in ongoing operational costs to BOX. As such, BOX aims to recover its costs by assessing these accounts a market competitive trading fee for BOX transactions, including Auction Transactions. The Exchange believes this proposed fee is reasonable considering, in part, that such accounts are assessed a higher fee ($0.40) for Non-Auction Transactions on BOX. Sending orders to and trading on BOX are entirely voluntary. Under these circumstances, BOX transaction fees must be competitive to attract order flow, execute orders, and grow its market. As such, BOX believes its trading fees proposed for these Broker-Dealer orders are fair and reasonable. The Exchange believes other parts of the proposed BOX fee structure (e.g., tiered Initiating Participant fees and Liquidity Fees and Credits) will provide incentives for broker-dealers to send order flow to the BOX PIP and other auction mechanisms, even with this increased trading fee.

The Exchange believes it is equitable and not unfairly discriminatory to offer BOX Market Makers in Auction Transactions an opportunity to be charged potentially lower fees than broker-dealers. Market Makers have obligations that other Participants do not. In particular, they must maintain active two-sided markets in the classes in which they are appointed, and must meet certain minimum quoting requirements. As such, the Exchange believes it is appropriate that Market Makers be charged potentially lower transaction fees on BOX and within BOX Auction Transactions. As such, the

[7] Note that if a Market Maker has ADV over 5,000 contracts the fee that Market Maker is charged for Improvement Orders in the PIP and Responses in other Auction Transactions may be lower than a particular Broker-Dealer is charged for an Improvement Order in the PIP or Response in another Auction Transaction. Note also that if a Market Maker has ADV over 150,000 contracts, the fee that Market Maker is charged for Improvement Orders in the PIP and Responses in other Auction Transactions may be lower than a particular customer is charged for such orders. As mentioned above, the Exchange believes this is equitable and not unfairly discriminatory given a Market Maker's value in providing liquidity to the market and other related obligations in acting as a Market Maker.

[8] The Exchange notes the proposed fees are comparable to fees currently in place at other exchanges. *See* International Securities Exchange, LLC (''ISE'') Schedule of Fees.

[9] The proposed fee is lower than that for similar orders on the ISE Schedule of Fees.

Exchange believes the proposed fees for broker-dealers, as compared to Market Makers, is appropriate and not unfairly discriminatory because it promotes enhanced BOX market quality.

The Exchange believes that the proposed Exchange Fees will keep BOX competitive with other exchanges and apply in such a manner so as to be equitable among BOX Participants. The Exchange believes the proposed fees are fair and reasonable and must be competitive with fees in place on other exchanges. Further, the Exchange believes that this competitive marketplace impacts the fees proposed for BOX. Greater liquidity and additional volume executed on BOX aids the price and volume discovery process.

B. Self-Regulatory Organization's Statement on Burden on Competition

The Exchange does not believe that the proposed rule change will impose any burden on competition not necessary or appropriate in furtherance of the purposes of the Act. The Exchange believes the proposed fee changes are reasonably designed to potentially enhance competition in BOX Auction Transactions, particularly in the PIP.

The proposed fee changes modify the tiered fees charged to Initiating Participants based on their monthly ADV in Auction Transactions. This may result in higher fees for Initiating Participants with monthly Auction Transaction ADV of less than 20,000 contracts. The proposed changes also increases the fee charged to broker-dealers for Improvement Orders in the PIP and Responses in the Solicitation and Facilitation Auction Mechanisms from $0.25 to $0.35. The Exchange believes this increase will not impair broker-dealers from adding liquidity and competing in Auction Transactions, so that they may gain the opportunity to interact with the customer orders seeking to remove liquidity in Auction Transactions.

Further, the proposed changes modify the tiered fees for Market Makers based on their ADV considering all of their BOX transactions. This may potentially increase or decrease any particular Market Maker's fees on BOX, including those fees for Auction Transactions, based on their monthly ADV. The Exchange believes it is likely that more Market Makers may benefit from lower fees as a result of this proposed change, lowering their cost to compete in BOX Auction Transactions.

Considering all of the above, the Exchange believes the proposed fee changes are reasonably designed to potentially enhance competition in BOX Auction Transactions, particularly in the PIP, and the Exchange does not believe that the proposed rule change will impose any burden on competition not necessary or appropriate in furtherance of the purposes of the Act.

C. Self-Regulatory Organization's Statement on Comments on the Proposed Rule Change Received From Members, Participants, or Others

No written comments were either solicited or received.

III. Date of Effectiveness of the Proposed Rule Change and Timing for Commission Action

The foregoing rule change has become effective pursuant to Section 19(b)(3)(A)(ii) of the Exchange Act [10] and Rule 19b–4(f)(2) thereunder,[11] because it establishes or changes a due, fee, or other charge applicable only to a member.

At any time within 60 days of the filing of the proposed rule change, the Commission summarily may temporarily suspend such rule change if it appears to the Commission that such action is necessary or appropriate in the public interest, for the protection of investors, or otherwise in furtherance of the purposes of the Exchange Act.

IV. Solicitation of Comments

Interested persons are invited to submit written data, views, and arguments concerning the foregoing, including whether the proposed rule change is consistent with the Act. Comments may be submitted by any of the following methods:

Electronic Comments

- Use the Commission's Internet comment form (*http://www.sec.gov/rules/sro.shtml);* or
- Send an email to *rule-comments@sec.gov.* Please include File Number SR–BOX–2012–005 on the subject line.

Paper Comments

- Send paper comments in triplicate to Elizabeth M. Murphy, Secretary, Securities and Exchange Commission, 100 F Street NE., Washington, DC 20549–1090.

All submissions should refer to File Number SR–BOX–2012–005. This file number should be included on the subject line if email is used. To help the Commission process and review your comments more efficiently, please use only one method. The Commission will post all comments on the Commission's Internet Web site (*http://www.sec.gov/rules/sro.shtml*). Copies of the submission, all subsequent amendments, all written statements with respect to the proposed rule change that are filed with the Commission, and all written communications relating to the proposed rule change between the Commission and any person, other than those that may be withheld from the public in accordance with the provisions of 5 U.S.C. 552, will be available for Web site viewing and printing in the Commission's Public Reference Room, 100 F Street NE., Washington, DC 20549, on official business days between the hours of 10 a.m. and 3 p.m. Copies of the filing also will be available for inspection and copying at the principal office of the Exchange. All comments received will be posted without change; the Commission does not edit personal identifying information from submissions. You should submit only information that you wish to make available publicly. All submissions should refer to File Number SR–BOX–2012–005 and should be submitted on or before July 26, 2012.

For the Commission, by the Division of Trading and Markets, pursuant to delegated authority.[12]

Kevin M. O'Neill,

Deputy Secretary.

[FR Doc. 2012–16449 Filed 7–3–12; 8:45 am]

BILLING CODE 8011–01–P

[10] 15 U.S.C. 78s(b)(3)(A)(ii).

[11] 17 CFR 240.19b–4(f)(2).

[12] 17 CFR 200.30–3(a)(12).

SECURITIES AND EXCHANGE COMMISSION

[File No. 500–1]

In the Matter of Apogee Technology, Inc.; Order of Suspension of Trading

July 2, 2012.

It appears to the Securities and Exchange Commission that there is a lack of current and accurate information concerning the securities of Apogee Technology, Inc. (''Apogee'') because it has not filed any periodic reports since the period ended June 30, 2011.

The Commission is of the opinion that the public interest and the protection of investors require a suspension of trading in the securities of the above-listed company, and any equity securities of any entity purporting to succeed to this issuer.

Therefore, *it is ordered,* pursuant to Section 12(k) of the Securities Exchange Act of 1934, that trading in the

securities of the above-listed company, and any equity securities of any entity purporting to succeed to this issuer, is suspended for the period from 9:30 a.m. EDT on July 2, 2012, through 11:59 p.m. EDT on July 16, 2012.

By the Commission.

Elizabeth M. Murphy,

Secretary.

[FR Doc. 2012–16538 Filed 7–2–12; 11:15 am]

BILLING CODE 8011–01–P

SMALL BUSINESS ADMINISTRATION

[Disaster Declaration #13101 and #13102]

Michigan Disaster #MI–00032

AGENCY: U.S. Small Business Administration.

ACTION: Notice.

SUMMARY: This is a notice of an Administrative declaration of a disaster for the State of Michigan dated 06/28/2012.

Incident: Severe Storms and Flooding.

Incident Period: 05/03/2012 through 05/05/2012.

Effective Date: 06/28/2012.

Physical Loan Application Deadline Date: 08/27/2012.

Economic Injury (EIDL) Loan Application Deadline Date: 03/28/2013.

ADDRESSES: Submit completed loan applications to: U.S. Small Business Administration, Processing and Disbursement Center, 14925 Kingsport Road, Fort Worth, TX 76155.

FOR FURTHER INFORMATION CONTACT: A. Escobar, Office of Disaster Assistance, U.S. Small Business Administration, 409 3rd Street SW., Suite 6050, Washington, DC 20416.

SUPPLEMENTARY INFORMATION: Notice is hereby given that as a result of the Administrator's disaster declaration, applications for disaster loans may be filed at the address listed above or other locally announced locations.

The following areas have been determined to be adversely affected by the disaster:

Primary Counties: Genesee.

Contiguous Counties:

Michigan: Lapeer, Livingston, Oakland, Saginaw, Shiawassee, Tuscola.

The Interest Rates are:

	Percent
For Physical Damage:	
Homeowners with Credit Available Elsewhere	3.875
Homeowners without Credit Available Elsewhere	1.938
Businesses with Credit Available Elsewhere	6.000
Businesses without Credit Available Elsewhere	4.000
Non-profit Organizations with Credit Available Elsewhere	3.125
Non-profit Organizations without Credit Available Elsewhere	3.000

	Percent
For Economic Injury:	
Businesses & Small Agricultural Cooperatives without Credit Available Elsewhere	4.000
Non-Profit Organizations without Credit Available Elsewhere	3.000

The number assigned to this disaster for physical damage is 131016 and for economic injury is 131020. The State which received an EIDL Declaration No. is Michigan.

(Catalog of Federal Domestic Assistance Numbers 59002 and 59008)

Dated: June 28, 2012.

Karen G. Mills,

Administrator.

[FR Doc. 2012–16392 Filed 7–3–12; 8:45 am]

BILLING CODE 8025–01–P

DEPARTMENT OF TRANSPORTATION

Office of the Secretary

Notice of Applications for Certificates of Public Convenience and Necessity and Foreign Air Carrier Permits Filed Under Subpart B (Formerly Subpart Q) During the Week Ending June 23, 2012

The following Applications for Certificates of Public Convenience and Necessity and Foreign Air Carrier Permits were filed under Subpart B (formerly Subpart Q) of the Department of Transportation's Procedural Regulations (See 14 CFR 301.201 *et seq.*). The due date for Answers, Conforming Applications, or Motions to Modify Scope are set forth below for each application. Following the Answer period DOT may process the application by expedited procedures. Such procedures may consist of the adoption of a show-cause order, a tentative order, or in appropriate cases a final order without further proceedings.

Docket Number: DOT–OST–2007–0066.

Date Filed: June 18, 2012.

Due Date for Answers, Conforming Applications, or Motion to Modify Scope: July 9, 2012.

Description: Application of Hainan Airlines Co., Ltd. (''Hainan Airlines'') requesting the Department amend its foreign air carrier permit to enable it to engage in scheduled air transportation of persons, property, and mail between Beijing, People's Republic of China (PEK), on the one hand, and Chicago, Illinois (ORD), on the other hand. Hainan Airlines also requests exemption authority to the extent necessary so that it may exercise the rights requested in this application prior to the issuance of an amended foreign air carrier permit.

Renee V. Wright,

Program Manager, Docket Operations, Federal Register Liaison.

[FR Doc. 2012–16400 Filed 7–3–12; 8:45 am]

BILLING CODE 4910–9X–P

DEPARTMENT OF TRANSPORTATION

Federal Aviation Administration

Notice of Intent To Rule on Request To Release Airport Property at Portland—Hillsboro Airport, Hillsboro, OR

AGENCY: Federal Aviation Administration (FAA), DOT.

ACTION: Notice of Proposal to Release Airport Property.

SUMMARY: The FAA proposes to rule and invites public comment on the release of land at Portland—Hillsboro Airport under the provisions of Section 125 of the Wendell H. Ford Aviation Investment Reform Act for the 21st Century (AIR 21), now 49 U.S.C. 47107(h)(2).

The FAA is considering a proposal to change a portion of the airport from aeronautical use to nonaeronautical use and to authorize the sale and/or conversion of the airport property. The proposal consists of two parcels of land containing a total of approximately 3.21 acres located in the southeast portion of the airport southeast of Cornell Rd. The FAA may approve the request, in whole or in part, no later than August 6, 2012.

DATES: Comments must be received on or before August 6, 2012.

ADDRESSES: Comments on this application may be mailed or delivered to the FAA at the following address: Dave Roberts, Federal Aviation Administration, Northwest Mountain Region, Airports Division, Seattle Airports District Office, 1601 Lind Avenue SW., Suite 250, Renton, Washington 98057–3356.

In addition, one copy of any comments submitted to the FAA must be mailed or delivered to Port of Portland at the following address: Steve Nagy, Hillsboro Airport Manager, Port of Portland, 7200 NE. Airport Way, Portland, OR 97218.

FOR FURTHER INFORMATION CONTACT: Dave Roberts, Federal Aviation Administration, Northwest Mountain Region, Seattle Airports District Office, 1601 Lind Avenue SW., Suite 250, Renton, Washington 98057–3356.

The request to release property may be reviewed, by appointment, in person at this same location.

SUPPLEMENTARY INFORMATION: The FAA invites public comment on the request to release property at the Portland—Hillsboro Airport under the provisions of the AIR 21 (49 U.S.C. 47107(h)(2)).

The following is a brief overview of the request:

The Port of Portland is proposing the release of approximately 3.21 acres of airport property acquired under federal grants: FAAP 9–35–063–D903, FAAP 9–35–063–E802, and ADAP 5–41–0025–04.

The land will be transferred to the City of Hillsboro for right-of-way use in constructing an extension of NE Veterans Drive and associated storm sewers. The Port of Portland proposes swapping the land with the City of Hillsboro and the County of Washington for approximately 4.1 acres of vacant right-of-way located on the airport in the runway 13 safety area and protection zone near NE Evergreen Road.

The property is described as follows:

(1) A tract of land located in the north one-half of Section 33 of Township 1 North, Range 2 West, Willamette Meridian, City of Hillsboro, Washington County, Oregon, and also being a portion of that property described in warranty deeds to the Port of Portland, recorded in Book 623, Page 367 and Book 824, Page 830 and Document Number 84044001 all recorded in the deed records of Washington County. Containing 136,106 square feet more or less.

(2) A tract of land located in the northeast one-quarter of Section 33 of Township 1 North, Range 2 West, Willamette Meridian, City of Hillsboro, Washington County, Oregon and also being a portion of that property described in warranty deed to the Port of Portland, as recorded in Book 623, Page 367 in the deed records of Washington County. Containing 4,000 square feet more or less.

Any person may inspect, by appointment, the request in person at the FAA office listed above under **FOR FURTHER INFORMATION CONTACT**.

In addition, any person may, upon appointment and request, inspect the application, notice and other documents germane to the application in person at the Portland—Hillsboro Airport or the Port of Portland offices at the Portland International Airport.

Issued in Renton, Washington, on June 19, 2012.

Carol Suomi,

Manager, Seattle Airports District Office.

[FR Doc. 2012–16437 Filed 7–3–12; 8:45 am]

BILLING CODE 4910–13–P

DEPARTMENT OF TRANSPORTATION

Federal Aviation Administration

Notice of Release From Federal Grant Assurance Obligations at Fresno Yosemite International Airport, Fresno, CA

AGENCY: Federal Aviation Administration, DOT.

ACTION: Notice of Request to Release Airport Land.

SUMMARY: The Federal Aviation Administration (FAA) proposes to rule and invites public comment on the application for a release of approximately 13.35 acres of airport property at the Fresno Yosemite International Airport (FAT), Fresno, California from all conditions contained in the Grant Assurances since the parcels of land is not needed for airport purposes. The land is located approximately 5,000 feet from the end of runway 11L in the northwest corner of the airport property. The property will be sold for its fair market value to the Fresno Metropolitan Flood Control District and the proceeds deposited in the airport account. The Fresno Metropolitan Flood Control District will continue use of the property as storm water detention basin. The detention basin usage will keep the property vacant and compatible with the airport to ensure it does not interfere with the airport or its operation, as well as continuing to serve the interest of civil aviation.

DATES: Comments must be received on or before August 6, 2012.

FOR FURTHER INFORMATION CONTACT: Comments on the request may be mailed or delivered to the FAA at the following address: Robert Lee, Airports Compliance Specialist, Federal Aviation Administration, San Francisco Airports District Office, Federal Register Comment, 1000 Marina Boulevard, Suite 220, Brisbane, CA 94005. In addition, one copy of the comment submitted to the FAA must be mailed or delivered to Mr. Russell C. Widmar, Director of Aviation, 4995 E. Clinton Way, Fresno, CA 93727.

SUPPLEMENTARY INFORMATION: In accordance with the Wendell H. Ford Aviation Investment and Reform Act for the 21st Century (AIR 21), Public Law 106–181 (Apr. 5, 2000; 114 Stat. 61), this notice must be published in the **Federal Register** 30 days before the Secretary may waive any condition imposed on a federally obligated airport by surplus property conveyance deeds or grant agreements.

The following is a brief overview of the request:

The City of Fresno, California requested a release from grant assurance obligations for approximately 13.35 acres of airport land to allow for its sale. The property was originally acquired as separate parcels with federal funding and airport generated funds. Approximately 2.23 acres were acquired under Airport Development Aid Program (ADAP) grant No. 6–06–0087–02; 1.41 acres were acquired under Airport Development Aid Program (ADAP) grant No. 6–06–0087–06; 3.05 acres were acquired under Airport Improvement Program (AIP) grant No. 3–06–0087–16 for noise abatement; 4.02 acres acquired under AIP grant No. 3–06–0087–19 for noise abatement; and 2.64 acres of the land was acquired from the State of California with airport generated funds for a total of 13.35 acres of airport land to be released.

Due to its location and condition, the property cannot be used for airport purposes. The property previously contained homes that have been removed and the land cleared. The land is presently kept vacant and is unimproved and does not have any current or future income generating potential. The planned land use is for a storm water detention basin and will be kept vacant. The release will allow 13.35 acres to be sold to the Fresno Metropolitan Flood Control District. The sale price will be based on an upward adjusted appraised fair market value. The sale proceeds will be deposited in the airport account. The Fresno Yosemite International Airport will be properly compensated, thereby serving the interests of civil aviation.

Issued in Brisbane, California, on June 20, 2012.

Michael A. Meyers,

Acting Assistant Manager, San Francisco Airports District Office, Western-Pacific Region.

[FR Doc. 2012–16432 Filed 7–3–12; 8:45 am]

BILLING CODE 4910–13–P

DEPARTMENT OF TRANSPORTATION

Federal Highway Administration

Notice of Final Federal Agency Actions on the Interstate 395 High Occupancy (HOV) Vehicle Ramp at Seminary Road Project in Virginia

AGENCY: Federal Highway Administration (FHWA), DOT.

ACTION: Notice of Limitation on Claims for Judicial Review of Actions by FHWA.

SUMMARY: This notice announces actions taken by the FHWA that are final within the meaning of 23 U.S.C. 139(l)(1). The actions relate to the Interstate 395 High Occupancy Vehicle (HOV) Ramp at Seminary Road project in the City of Alexandria, Virginia. Those actions grant licenses, permits, and approvals for the project.

DATES: By this notice, the FHWA is advising the public of final agency actions subject to 23 U.S.C. 139(*l*)(1). A claim seeking judicial review of the Federal agency actions on the project will be barred unless the claim is filed on or before January 2, 2013. Notwithstanding any other provision of law, a claim arising under Federal law seeking judicial review of a permit, license, or approval issued by a Federal agency for a highway or public transportation capital project shall be barred unless it is filed within 180 days after publication of a notice in the **Federal Register** announcing that the permit, license, or approval is final pursuant to the law under which the agency action is taken, unless a shorter time is specified in the Federal law pursuant to which judicial review is allowed.

FOR FURTHER INFORMATION CONTACT: Mr. John Simkins, Planning and Environment Team Leader, Federal Highway Administration, 400 North 8th Street, Richmond, Virginia 23219; telephone: (804) 775–3342; email: *John.Simkins@dot.gov.* The FHWA Virginia Division Office's normal business hours are 7 a.m. to 5 p.m. (Eastern Time). For the Virginia Department of Transportation: Mr. Robert Iosco, Environmental Program Manager, 4975 Alliance Drive, Fairfax, Virginia 22030; telephone: (703) 259–2764; email: *Robert.Iosco@VDOT.Virginia.gov.* The Virginia Department of Transportation's normal business hours are 8 a.m. to 5 p.m. (Eastern Time).

SUPPLEMENTARY INFORMATION: Notice is hereby given that FHWA has taken final agency actions subject to 23 U.S.C. 139(l)(1) by issuing licenses, permits, and approvals for the following project in the State of Virginia: Interstate 395 High Occupancy Vehicle (HOV) Ramp at Seminary Road. The project would involve construction of a ramp between the Interstate 395 HOV lanes and Seminary Road. The actions taken by FHWA, and the laws under which such actions were taken, are described in the Environmental Assessment, the May 10, 2012 letter revising the Environmental Assessment and requesting a Finding of No Significant Impact (FONSI), the FONSI that was issued on June 12, 2012, and in other documents in the FHWA project records. The Environmental Assessment, the letter revising the Environmental Assessment and requesting a FONSI, and the FONSI can be viewed on the project's Internet site at *http://www.vamegaprojects.com/about-megaprojects/mark-center-taskforce/.* These documents and other project records are also available by contacting FHWA or the Virginia Department of Transportation at the phone numbers and addresses provided above.

This notice applies to all Federal agency decisions as of the issuance date of this notice and all laws under which such actions were taken, including but not limited to:

1. *General:* National Environmental Policy Act (NEPA) [42 U.S.C. 4321–4351]; Federal-Aid Highway Act (FAHA) [23 U.S.C. 109 and 23 U.S.C. 128].

2. *Air:* Clean Air Act [42 U.S.C. 7401–7671(q)].

3. *Land:* Section 4(f) of the Department of Transportation Act of 1966 [49 U.S.C. 303].

4. *Wildlife:* Endangered Species Act [16 U.S.C. 1531–1544 and Section 1536].

5. *Historic and Cultural Resources:* Section 106 of the National Historic Preservation Act of 1966, as amended [16 U.S.C. 470(f) *et seq.*].

6. *Social and Economic:* Farmland Protection Policy Act [7 U.S.C. 4201–4209].

(Catalog of Federal Domestic Assistance Program Number 20.205, Highway Planning and Construction. The regulations implementing Executive Order 12372 regarding intergovernmental consultation on Federal programs and activities apply to this program.)

Authority: 23 U.S.C 139(*l*)(1).

Issued on: June 28, 2012.

John Simkins,

Planning and Environment Team Leader.

[FR Doc. 2012–16474 Filed 7–3–12; 8:45 am]

BILLING CODE 4910–RY–P

DEPARTMENT OF TRANSPORTATION

Federal Railroad Administration

[Docket Number FRA–2012–0050]

Petition for Waiver of Compliance

In accordance with Part 211 of Title 49 Code of Federal Regulations (CFR), notice is hereby given that the Federal Railroad Administration (FRA) has received a request for a waiver of compliance from certain requirements of its safety standards. The individual petition is described below, including the party seeking relief, the regulatory provisions involved, the nature of the relief being requested, and the petitioner's arguments in favor of relief.

The Lake Railway LLC (LRY) petitioned FRA for a waiver from the requirements of 49 CFR 231.30 regarding their locomotive, LRY #2809, a 1985 EMD Model GP49.

As stated by the petitioner, this locomotive has been in service with the current step arrangement for decades, as it was modified for specific use by its original owner, Alaska Railroad. The current configuration of the front ladder does not present a safety hazard to LRY crews that are regularly assigned to use this locomotive. In summary, the configuration of the front ladder arrangement is equivalent to that for a locomotive built prior to April 1, 1977.

Interested parties are invited to participate in these proceedings by submitting written views, data, or comments. FRA does not anticipate scheduling a public hearing in connection with these proceedings since the facts do not appear to warrant a hearing. If any interested party desires an opportunity for oral comment, they should notify FRA, in writing, before the end of the comment period and specify the basis for their request.

All communications concerning these proceedings should identify the appropriate docket number (e.g., Waiver Petition Docket Number FRA–2012–0050) and may be submitted by any of the following methods:

- *Web site: http://www.regulations.gov.* Follow the online instructions for submitting comments.
- *Fax:* 202–493–2251.
- *Mail:* Docket Operations Facility, U.S. Department of Transportation, 1200 New Jersey Avenue SE., W12–140, Washington, DC 20590.
- *Hand Delivery:* 1200 New Jersey Avenue SE., Room W12–140, Washington, DC 20590, between 9 a.m. and 5 p.m., Monday through Friday, except Federal holidays.

Communications received within 45 days of the date of this notice will be

considered by FRA before final action is taken. Comments received after that date will be considered as far as practicable. All written communications concerning these proceedings are available for examination during regular business hours (9 a.m.–5 p.m.) at the above facility. All documents in the public docket are also available for inspection and copying on the Internet at the docket facility's Web site at *http://www.regulations.gov.*

Anyone is able to search the electronic form of any written communications and comments received into any of our dockets by the name of the individual submitting the document (or signing the document, if submitted on behalf of an association, business, labor union, etc.). You may review DOT's complete Privacy Act Statement in the **Federal Register** published on April 11, 2000 (Volume 65, Number 70; Page 19477) or at *http://www.dot.gov/privacy.html.*

Issued in Washington, DC, on June 26, 2012.

Ron Hynes,

Acting Deputy Associate Administrator for Regulatory and Legislative Operations.

[FR Doc. 2012–16345 Filed 7–3–12; 8:45 am]

BILLING CODE 4910–06–P

DEPARTMENT OF TRANSPORTATION

Maritime Administration

[Docket No. MARAD 2012 0074]

Requested Administrative Waiver of the Coastwise Trade Laws: Vessel RANGER; Invitation for Public Comments

AGENCY: Maritime Administration, Department of Transportation.

ACTION: Notice.

SUMMARY: As authorized by 46 U.S.C. 12121, the Secretary of Transportation, as represented by the Maritime Administration (MARAD), is authorized to grant waivers of the U.S.-build requirement of the coastwise laws under certain circumstances. A request for such a waiver has been received by MARAD. The vessel, and a brief description of the proposed service, is listed below.

DATES: Submit comments on or before August 6, 2012.

ADDRESSES: Comments should refer to docket number MARAD–2012–0074. Written comments may be submitted by hand or by mail to the Docket Clerk, U.S. Department of Transportation, Docket Operations, M–30, West Building Ground Floor, Room W12–140, 1200 New Jersey Avenue SE., Washington, DC 20590. You may also send comments electronically via the Internet at *http://www.regulations.gov.* All comments will become part of this docket and will be available for inspection and copying at the above address between 10 a.m. and 5 p.m., E.T., Monday through Friday, except Federal holidays. An electronic version of this document and all documents entered into this docket is available on the World Wide Web at *http://www.regulations.gov.*

FOR FURTHER INFORMATION CONTACT: Linda Williams, U.S. Department of Transportation, Maritime Administration, 1200 New Jersey Avenue SE., Room W23–453, Washington, DC 20590. Telephone 202–366–0903, Email *Linda.Williams@dot.gov.*

SUPPLEMENTARY INFORMATION: As described by the applicant the intended service of the vessel RANGER is:

Intended Commercial Use of Vessel: ''Marine life education and photography tours charter concession.''

Geographic Region: ''California.''

The complete application is given in DOT docket MARAD–2012–0074 at *http://www.regulations.gov.* Interested parties may comment on the effect this action may have on U.S. vessel builders or businesses in the U.S. that use U.S.-flag vessels. If MARAD determines, in accordance with 46 U.S.C. 12121 and MARAD's regulations at 46 CFR part 388, that the issuance of the waiver will have an unduly adverse effect on a U.S.-vessel builder or a business that uses U.S.-flag vessels in that business, a waiver will not be granted. Comments should refer to the docket number of this notice and the vessel name in order for MARAD to properly consider the comments. Comments should also state the commenter's interest in the waiver application, and address the waiver criteria given in § 388.4 of MARAD's regulations at 46 CFR part 388.

Privacy Act

Anyone is able to search the electronic form of all comments received into any of our dockets by the name of the individual submitting the comment (or signing the comment, if submitted on behalf of an association, business, labor union, etc.). You may review DOT's complete Privacy Act Statement in the **Federal Register** published on April 11, 2000 (Volume 65, Number 70; Pages 19477–78).

By order of the Maritime Administrator.

Dated: June 26, 2012.

Julie P. Agarwal,

Secretary, Maritime Administration.

[FR Doc. 2012–16422 Filed 7–3–12; 8:45 am]

BILLING CODE 4910–81–P

DEPARTMENT OF TRANSPORTATION

Maritime Administration

[Docket No. MARAD 2012 0075]

Requested Administrative Waiver of the Coastwise Trade Laws: Vessel CHA–CHING; Invitation for Public Comments

AGENCY: Maritime Administration, Department of Transportation.

ACTION: Notice.

SUMMARY: As authorized by 46 U.S.C. 12121, the Secretary of Transportation, as represented by the Maritime Administration (MARAD), is authorized to grant waivers of the U.S.-build requirement of the coastwise laws under certain circumstances. A request for such a waiver has been received by MARAD. The vessel, and a brief description of the proposed service, is listed below.

DATES: Submit comments on or before August 6, 2012.

ADDRESSES: Comments should refer to docket number MARAD–2012–0075. Written comments may be submitted by hand or by mail to the Docket Clerk, U.S. Department of Transportation, Docket Operations, M–30, West Building Ground Floor, Room W12–140, 1200 New Jersey Avenue SE., Washington, DC 20590. You may also send comments electronically via the Internet at *http://www.regulations.gov.* All comments will become part of this docket and will be available for inspection and copying at the above address between 10 a.m. and 5 p.m., E.T., Monday through Friday, except federal holidays. An electronic version of this document and all documents entered into this docket is available on the World Wide Web at *http://www.regulations.gov.*

FOR FURTHER INFORMATION CONTACT: Linda Williams, U.S. Department of Transportation, Maritime Administration, 1200 New Jersey Avenue SE., Room W23–453, Washington, DC 20590. Telephone 202–366–0903, Email *Linda.Williams@dot.gov.*

SUPPLEMENTARY INFORMATION: As described by the applicant the intended service of the vessel CHA–CHING is:

Intended Commercial Use of Vessel: ''Sailing instruction, adventure charters, and recreational fishing.''

Geographic Region: ''Texas, Louisiana, Mississippi, Alabama, Florida, South Carolina, North Carolina, Georgia, Virginia, Maryland, Delaware, New Jersey, New York, Rhode Island, Maine, Ohio, Michigan, Wisconsin, Minnesota, Illinois, and Puerto Rico.'' The complete application is given in DOT docket MARAD–2012–0075 at *http://www.regulations.gov.* Interested parties may comment on the effect this action may have on U.S. vessel builders or businesses in the U.S. that use U.S.-flag vessels. If MARAD determines, in accordance with 46 U.S.C. 12121 and MARAD's regulations at 46 CFR part 388, that the issuance of the waiver will have an unduly adverse effect on a U.S.-vessel builder or a business that uses U.S.-flag vessels in that business, a waiver will not be granted. Comments should refer to the docket number of this notice and the vessel name in order for MARAD to properly consider the comments. Comments should also state the commenter's interest in the waiver application, and address the waiver criteria given in § 388.4 of MARAD's regulations at 46 CFR part 388.

Privacy Act

Anyone is able to search the electronic form of all comments received into any of our dockets by the name of the individual submitting the comment (or signing the comment, if submitted on behalf of an association, business, labor union, etc.). You may review DOT's complete Privacy Act Statement in the **Federal Register** published on April 11, 2000 (Volume 65, Number 70; Pages 19477–78).

By Order of the Maritime Administrator.

Dated: June 26, 2012.

Julie P. Agarwal,

Secretary, Maritime Administration.

[FR Doc. 2012–16423 Filed 7–3–12; 8:45 am]

BILLING CODE 4910–81–P

DEPARTMENT OF TRANSPORTATION

Pipeline and Hazardous Materials Safety Administration

[Docket No. PHMSA–PHMSA–2012–0137]

Pipeline Safety: Information Collection Activities

AGENCY: Pipeline and Hazardous Materials Safety Administration (PHMSA), DOT.

ACTION: Notice and request for comments.

SUMMARY: In accordance with the Paperwork Reduction Act of 1995, PHMSA invites comments on a new information collection (IC) to help determine the effectiveness of PHMSA's 811 Public Service Announcement (PSA) campaign. In calendar year 2012, as part of a campaign to raise awareness of 811 as the national ''Call Before You Dig'' toll-free telephone number, PHMSA produced a 30-second video PSA, a 30-second radio PSA and a 60-second radio PSA. All were produced in both English and Spanish and are available in several formats for downloading and broadcasting. PHMSA seeks to measure the effectiveness of the campaign through an online survey. After the comments to this notice are addressed, PHMSA will request approval for this new information collection from the Office of Management and Budget (OMB).

DATES: Interested persons are invited to submit comments on or before September 4, 2012.

ADDRESSES: Comments may be submitted in the following ways:

E-Gov Web Site: http://www.regulations.gov. This site allows the public to enter comments on any **Federal Register** notice issued by any agency.

Fax: 1–202–493–2251.

Mail: Docket Management Facility; U.S. DOT, 1200 New Jersey Avenue SE., West Building, Room W12–140, Washington, DC 20590–0001.

Hand Delivery: Room W12–140 on the ground level of the U.S. DOT, West Building, 1200 New Jersey Avenue SE., Washington, DC, between 9 a.m. and 5 p.m., Monday through Friday, except Federal holidays.

Instructions: Identify the docket number, PHMSA–2012–0137, at the beginning of your comments. Note that all comments received will be posted without change to *http://www.regulations.gov,* including any personal information provided. You should know that anyone is able to search the electronic form of all comments received into any of our dockets by the name of the individual submitting the comment (or signing the comment, if submitted on behalf of an association, business, labor union, etc.). Therefore, you may want to review DOT's complete Privacy Act Statement in the **Federal Register** published on April 11, 2000, (65 FR 19477) or visit *http://www.regulations.gov* before submitting any such comments.

Docket: For access to the docket or to read background documents or comments, go to *http://www.regulations.gov* at any time or to Room W12–140 on the ground level of the U.S. DOT, West Building, 1200 New Jersey Avenue SE., Washington, DC, between 9 a.m. and 5 p.m., Monday through Friday, except Federal holidays. If you wish to receive confirmation of receipt of your written comments, please include a self-addressed, stamped postcard with the following statement: ''Comments on PHMSA–2012–0137.'' The Docket Clerk will date stamp the postcard prior to returning it to you via the U.S. mail. Please note that due to delays in the delivery of U.S. mail to Federal offices in Washington, DC, we recommend that persons consider an alternative method (internet, fax, or professional delivery service) of submitting comments to the docket and ensuring their timely receipt at DOT.

FOR FURTHER INFORMATION CONTACT: Angela Dow by telephone at 202–366–1246, by fax at 202–366–4566, or by mail at U.S. DOT, PHMSA, 1200 New Jersey Avenue SE., PHP–30, Washington, DC 20590–0001.

SUPPLEMENTARY INFORMATION: Section 1320.8(d), Title 5, Code of Federal Regulations requires PHMSA to provide interested members of the public and affected agencies an opportunity to comment on information collection and recordkeeping requests. This notice identifies a new information collection request that PHMSA will submit to OMB for approval. The information collection will be titled: ''U.S. Department of Transportation Pipeline and Hazardous Materials Safety Administration 811 Awareness Survey.'' This information collection will provide the data necessary to measure the effectiveness of the PHMSA 811 PSA campaign. Excavation damage to pipelines is a leading cause of serious incidents involving fatalities and injuries. A call to 811 is the first step in preventing such incidents and PHMSA seeks to increase awareness of this critical safety message to reduce the number of damages to pipelines. Target audiences for the PSA include the general public and small professional excavators. The survey is designed to measure awareness of the importance of calling 811 before beginning an excavation project and the extent to which the PSA influences that awareness and planned behavior. The results of this survey will help shape future PHMSA 811 outreach and educational efforts. PHMSA is proposing an online form for this information collection. A copy of the survey has been placed in the docket and is available for comment. The following information is provided for

this information collection: (1) Title of the information collection; (2) OMB control number; (3) Type of request; (4) Abstract of the information collection activity; (5) Description of affected public; (6) Estimate of total annual reporting and recordkeeping burden; and (7) Frequency of collection. PHMSA will request a three-year term of approval for this information collection activity.

PHMSA requests comments on the following information collection:

Title: U.S. Department of Transportation Pipeline and Hazardous Materials Safety Administration 811 Awareness Survey.

OMB Control Number: Pending.

Type of Request: New information collection.

Abstract: PHMSA is conducting a survey of awareness of 811 as the national ''Call Before You Dig'' toll-free telephone number, the importance of calling 811 before beginning an excavation project and the extent to which the newly released PHMSA PSA is effective in raising awareness about this topic. This data is necessary to measure the effectiveness of the PSA campaign and plan future educational and outreach efforts.

Affected Public: All.

Estimated number of responses: 1,000.

Estimated annual burden hours: 120.

Frequency of collection: One time collection.

Comments are invited on:

(a) The need for the proposed collection of information for the proper performance of the functions of the agency, including whether the information will have practical utility;

(b) The accuracy of the agency's estimate of the burden of the proposed collection of information, including the validity of the methodology and assumptions used;

(c) Ways to enhance the quality, utility, and clarity of the information to be collected; and

(d) Ways to minimize the burden of the collection of information on those who are to respond, including the use of appropriate automated, electronic, mechanical, or other technological collection techniques.

Issued in Washington, DC, on June 27, 2012.

Jeffrey D. Wiese,

Associate Administrator for Pipeline Safety.

[FR Doc. 2012–16456 Filed 7–3–12; 8:45 am]

BILLING CODE 4910–60–P

DEPARTMENT OF TRANSPORTATION

Pipeline and Hazardous Materials Safety Administration

[Docket No. PHMSA–2012–0059; Notice No. 12–5]

Clarification Policy on Initial Fitness Review for Classification Approvals

AGENCY: Pipeline and Hazardous Materials Safety Administration (PHMSA), DOT.

ACTION: Clarification.

SUMMARY: This notice clarifies and provides further guidance on PHMSA's policy of conducting fitness reviews of applicants for classification approvals, including Fireworks, Explosives, Organic Peroxides and Self-reactive materials.

DATES: The policy clarification discussed in this document is effective July 5, 2012.

FOR FURTHER INFORMATION CONTACT: Mr. Ryan Paquet, Director, Approvals and Permits Division, Office of Hazardous Materials Safety, (202) 366–4512, PHMSA, 1200 New Jersey Avenue SE., Washington, DC 20590.

SUPPLEMENTARY INFORMATION: Effective immediately, Initial Fitness Reviews (IFR) will no longer be performed by PHMSA as part of the processing for classification approvals, including: Fireworks, Explosives, Organic Peroxides and Self Reactive Materials.

The use of the available agency information in the Hazmat Intelligence Portal (HIP) and Federal Motor Carrier Safety Administration's (FMCSA) Safety Fitness Electronic Records (SAFER) databases do not directly and adequately indicate a company's capability to manufacture the approved product in accordance with the application submitted to PHMSA. This change in policy and practice will be reflected in the next update to the Approvals Standard Operating Procedures and in the evaluation forms completed as part of the review process.

Fitness of applicants for classification approvals will continue to be reviewed through application evaluation, inspection, oversight and intelligence received from PHMSA or another Operating Administration (FAA, FMCSA, FRA, or USCG).

Issued in Washington, DC, on June 28, 2012.

William Schoonover,

Deputy Associate Administrator for Field Operations, Pipeline and Hazardous Materials Safety Administration.

[FR Doc. 2012–16363 Filed 7–3–12; 8:45 am]

BILLING CODE 4910–60–P

FEDERAL REGISTER

Vol. 77 Thursday,

No. 129 July 5, 2012

Part II

Department of Transportation

Office of the Secretary

14 CFR Part 382

Nondiscrimination on the Basis of Disability in Air Travel: Draft Technical Assistance Manual; Proposed Rule

DEPARTMENT OF TRANSPORTATION

Office of the Secretary

14 CFR Part 382

[Docket No. DOT–OST–2012—0098]

Nondiscrimination on the Basis of Disability in Air Travel: Draft Technical Assistance Manual

AGENCY: Office of the Secretary, U.S. Department of Transportation (DOT).

ACTION: Request for comments.

SUMMARY: The Department of Transportation is updating its technical assistance manual (TAM) for airlines and passengers with disabilities concerning their rights and responsibilities under the Air Carrier Access Act (ACAA) and its implementing regulation. This draft updated TAM is being published in the **Federal Register** to insure a full opportunity for public comment before the document is published in final form.

DATES: Comments must be received October 3, 2012. The Department will consider late-filed comments only to the extent practicable.

ADDRESSES: You may file comments identified by the docket number DOT–OST–2012–0098 by any of the following methods:

○ *Federal eRulemaking Portal:* Go to *http://www.regulations.gov* and follow the online instructions for submitting written comments.

○ *Mail:* Docket Management Facility, U.S. Department of Transportation, 1200 New Jersey Ave. SE., Room W12–140, Washington, DC 20590–0001.

○ *Hand Delivery or Courier:* West Building Ground Floor, Room W12–140, 1200 New Jersey Ave. SE., between 9 a.m. and 5 p.m. ET, Monday through Friday, except Federal Holidays.

○ *Fax:* (202) 493–2251.

Instructions: You must include the agency name and docket number DOT–OST–2012–0098 at the beginning of your comment. All comments received will be posted without change to *http://www.regulations.gov,* including any personal information provided.

Privacy Act: Anyone is able to search the electronic form of all comments received in any of our dockets by the name of the individual submitting the comment (or signing the comment if submitted on behalf of an association, a business, a labor union, etc.). You may review DOT's complete Privacy Act statement in the **Federal Register** published on April 11, 2000 (65 FR 19477–78), or you may visit *http://DocketsInfo.dot.gov.*

Docket: For access to the docket to read background documents or comments received, go to *http://www.regulations.gov* or to the street address listed above. Follow the online instructions for accessing the docket.

FOR FURTHER INFORMATION CONTACT: Lisa Swafford-Brooks, Chief of the Civil Rights Compliance Branch, Office of the Assistant General Counsel for Aviation Enforcement and Proceedings, Department of Transportation, 1200 New Jersey Avenue SE., Room W96–464, Washington, DC 20590. *Lisa.Swaffordbrooks@dot.gov.* You may also contact Blane A. Workie, Deputy Assistant General Counsel, Office of the Assistant General Counsel for Aviation Enforcement and Proceedings, Department of Transportation, 1200 New Jersey Avenue SE., Room W96–464, Washington, DC 20590. *Blane.Workie@dot.gov.* Arrangements to receive this notice in an alternative format may be made by contacting the above named individuals.

SUPPLEMENTARY INFORMATION:ON APRIL 5, 2000, THE WENDELL H. FORD AVIATION INVESTMENT AND REFORM ACT FOR THE 21ST CENTURY (AIR–21) REQUIRED DOT TO PROVIDE A TECHNICAL ASSISTANCE MANUAL TO AIR CARRIERS AND INDIVIDUALS WITH DISABILITIES CONCERNING THEIR RIGHTS AND RESPONSIBILITIES UNDER THE AIR CARRIER ACCESS ACT AND DOT REGULATIONS. IN RESPONSE TO THE LEGISLATIVE MANDATE, ON APRIL 20, 2005, THE DEPARTMENT PUBLISHED A DRAFT TAM IN THE Federal Register AND REQUESTED PUBLIC COMMENT. SEE 70 FR 20640. AFTER REVIEWING THE COMMENTS RECEIVED AND MAKING CHANGES TO THE TAM WHERE APPROPRIATE, THE DEPARTMENT ISSUED A FINAL TAM ON JULY 19, 2005. SEE 70 FR 41482. Since that time, DOT has made significant changes to Part 382, the rule implementing the Air Carrier Access Act. On May 13, 2008, DOT issued an amendment to 14 CFR part 382, which among other things, extended its applicability to foreign air carriers and added new provisions concerning the onboard use of respiratory assistive devices and accommodations for passengers who are deaf, hard of hearing, and deaf-blind. See 73 FR 27614. The final rule became effective on May 13, 2009. The Department has also issued guidance that interprets or explains further the text of the rule. See e.g., *Use of passenger-supplied electronic respiratory assistive devices on aircraft,* October 28, 2009; *Answers to Frequently Asked Questions Concerning Air Travel of People with Disabilities Under the Amended Air Carrier Access Act Regulation,* May 13, 2009. *http://airconsumer.dot.gov/rules/guidance.htm.* We believe these guidance documents as well as the rule itself would be more readily understandable and useful if reflected in the TAM. As a result, DOT is now updating the 2005 TAM to provide guidance that covers the changes that have been made to Part 382. The Department recognizes that there are a number of ongoing rulemakings regarding Part 382 and that these rulemakings may necessitate future revisions to the TAM.

Purpose

Similar to the 2005 TAM, this updated draft manual does not expand U.S. or foreign air carriers' legal obligations or establish new requirements under the law. The primary purpose of the manual is to help employees and contractors of airlines to assist passengers with disabilities in accordance with the law. Another purpose is to provide air travelers with disabilities information about their rights under the ACAA and the provisions of Part 382.

Organization

The updated TAM, like its predecessor, follows the chronological path of an air traveler with a disability from making a reservation through the completion of the trip. Each section of the TAM is discussed in the context of the particular stage of a trip and is designed to be a separate stand-alone product. For example, the TAM includes separate chapters on assisting air travelers with disabilities planning a trip, assisting air travelers with disabilities at the airport, assisting air travelers with disabilities boarding, deplaning and during the flight, and assisting air travelers with disabilities with their complaints. In addition, the TAM contains a chapter on sensitivity and awareness issues when interacting with people with disabilities as well as a chapter on tips for communicating and interacting with individuals with specific types of disabilities.[1] The TAM also has four appendices providing additional information and, in some cases, resources for specific audiences. We believe organizing the information in this sequential manner will make it easier for employees and contractors of airlines, as well as air travelers with

[1] When the TAM is published in its final form, it will contain an Alphabetical Index and a Part 382 Index as well as specific page numbers for the various subject areas listed in the Table of Contents. However, because the pagination of the TAM is not yet final, the Table of Contents simply lists the topics covered in the TAM and the indices are not included in this publication of the document.

disabilities, to find the information most relevant and useful to them.

Issued this 15th day of June 2012, in Washington, DC.

Samuel Podberesky,

Assistant General Counsel for Aviation Enforcement and Proceedings, U.S. Department of Transportation.

What Airline Employees, Airline Contractors, and Air Travelers With Disabilities Need To Know About Access to Air Travel for Persons With Disabilities

A Guide to Air Carrier Access Act (ACAA) and Its Implementing Regulation, 14 CFR Part 382 (Part 382)

Contents

Chapter 1: Understanding How to Use This Manual
A. Introduction
B. Background
C. Scope of This Manual
D. Keyword Definitions
E. Acronyms
Chapter 2: Learning the Basics About the Law Protecting Air Travelers With Disabilities
A. The Statute and the Regulation
B. Applying Part 382 Requirements
C. Questions on Foreign Carrier Flights
D. Conflicts of Law Waivers
E. Equivalent Alternative Determinations
F. Assisting Passengers With Disabilities
G. Part 382 Highlights
Chapter 3: Assisting Air Travelers With Disabilities Planning a Trip
A. Advance Notice
B. Information About the Aircraft
C. Mobility Aids and Assistive Devices
D. Service Animals
E. Accommodations for Air Travelers With Hearing Impairments
F. Communicable Disease
G. Medical Certificates
H. Your Obligation To Provide Services and Equipment
I. Safety Assistants
Chapter 4: Assisting Air Travelers With Disabilities at the Airport
A. Accessibility of Terminal Facilities and Services
B. Security Screening for Air Travelers With a Disability
C. Air Travelers With a Disability Moving Through the Terminal and Changing Airplanes
D. Accommodations for Air Travelers With Vision or Hearing Impairments
E. Safety Assistants
Chapter 5: Assisting Air Travelers With Disabilities Boarding, Deplaning, and During the Flight
A. Aircraft Accessibility
B. Seating Assignments and Accommodations
C. Boarding and Deplaning Assistance
D. Stowing and Treatment of Assistive Devices
E. Services and Information Provided in the Cabin
F. Safety Briefings
Chapter 6: Assisting Air Travelers With Disabilities With Their Complaints
A. Complaints Resolution Officials (CROs)
B. Handling Passenger Complaints
C. ACCESS: An Approach for Resolving Complaints
D. General Complaint Resolution Tips
E. Categorizing, Recording, and Reporting Written Disability-Related Complaints
Chapter 7: Interacting with Individuals With Disabilities
A. Terminology
B. Physical, Mental, and Psychological Impairments
C. Tips for Interacting With Individuals With Disabilities
Chapter 8: Personnel Training
A. U.S. and Foreign Carriers That Operate Aircraft With 19 or More Passenger Seats
B. U.S. and Foreign Carriers That Operate Aircraft With Fewer Than 19 Passenger Seats
C. Training Records
Alphabetical Index
Part 382 Index
Appendix I Table of Effective Dates
Appendix II Tips for Air Travelers with Disabilities
Appendix III Airline Management-Related Issues
Appendix IV FSAT 04–01A Location and Placement of Service Animals on Aircraft Engaged in Public Air Transportation

Chapter 1: Understanding How To Use This Manual

A. Introduction
B. Background
C. Scope of This Manual
D. Keyword Definitions
E. Acronyms

A. Introduction

Purpose of the Manual

This manual is a guide to the Air Carrier Access Act (ACAA), 49 U.S.C. 41705, and its implementing regulation, Title 14, Code of Federal Regulations (14 CFR) Part 382, Nondiscrimination on the Basis of Disability in Air Travel. It is designed to serve as an authoritative source of information about the services, facilities, and accommodations required by the ACAA and Part 382. Note, however, that this manual does not expand carriers' legal obligations or establish new requirements under the law.

The primary purpose of the manual is to help carriers and indirect carriers and their employees/contractors that provide services or facilities to passengers with disabilities, assist those passengers in accordance with Part 382. Knowing your legal responsibilities will help ensure consistent compliance with Part 382 and protect the civil rights of air travelers with disabilities when you provide services, facilities, and accommodations to them.

The second purpose of this manual is to offer air travelers with disabilities information about their rights under the ACAA and Part 382.

Styles

1. Use of the Word ''You''

Unless otherwise noted, throughout the manual the word ''you'' refers to carriers, indirect carriers, or the employees/contractors of both carriers and indirect carriers. In most cases, the word ''you'' refers to personnel who deal directly with the traveling public. In addition, the obligations and responsibilities under Part 382 as discussed in the manual must be read within the context of each specific employee's duties on the job.

2. Italics and Bold Text

Italics and boldfaced type are used throughout the manual to draw attention to a subtle requirement or for emphasis.

B. Background

U.S. Air Carriers

In 1986, Congress passed the ACAA, which prohibits discrimination by U.S. air carriers against qualified individuals with disabilities.[2] In 1990, the Department of Transportation (DOT) published Part 382, the regulations defining the rights of passengers with disabilities and the obligations of U.S. air carriers under the ACAA (55 FR 8008; March 6, 1990). Since then, these regulations have been amended many times.[3] In addition, the DOT has provided guidance to air carriers to further explain the ACAA and Part 382 in the following ways:

- Preambles to regulatory amendments;
- Industry letters;
- Correspondence with individual carriers or complainants;
- DOT enforcement actions;
- Web site postings,
- Conducting public forums on Part 382, and
- Informal conversations between DOT staff and interested members of the public.

Foreign Air Carriers

On April 5, 2000, the Wendell H. Ford Aviation Investment and Reform Act for the 21st Century (''AIR–21''), Public Law 106–181, amended the ACAA

[2] See Section D of this chapter for keyword definitions including a definition of ''qualified individuals with disabilities.''

[3] The dates and citations for these amendments are the following: April 3, 1990, 55 FR 12341; June 11, 1990, 55 FR 23544; November 1, 1996, 61 FR 56422; January 2, 1997, 62 FR 17; March 4, 1998, 63 FR 10535; March 11, 1998, 63 FR 11954; August 2, 1999, 64 FR 41703; January 5, 2000, 65 FR 352; May 3, 2001, 66 FR 22115; July 3, 2003, 68 FR 4088.

specifically to cover foreign air carriers. On November 4, 2004, the DOT published a notice of proposed rulemaking (NPRM) proposing to extend the provisions of Part 382 to foreign carriers (69 FR 64364). On May 13, 2008, the DOT published a final rule (73 FR 27614) amending Part 382 to cover foreign air carriers. That revised final rule became effective on May 13, 2009.

Other Part 382 Changes

The DOT also published NPRMs addressing medical oxygen and portable respiratory assistive devices (70 FR 53108; September 7, 2005) and accommodations for passengers who are deaf or hard-of-hearing (71 FR 9285; February 23, 2006). As a result of those NPRMs, the final rule revising Part 382 to cover foreign carriers, also included new provisions concerning passengers who use medical oxygen and passengers who are deaf or hard-of-hearing. The final rule also reorganized and updated the entire ACAA rule (Part 382).

Development and Update of Technical Assistance Manual

In 2000, Congress required DOT to create a technical assistance manual to provide guidance to individuals and entities with rights or responsibilities under the ACAA. See 49 U.S.C. 41705(c). Responding to that mandate, the DOT published a manual in the **Federal Register** on July 19, 2005 (70 FR 41482). This manual is the second version of DOT's Technical Assistance Manual and incorporates material from the most recent amendments to Part 382 and the DOT policy guidance discussed above. The DOT published the draft manual in the **Federal Register** to provide an opportunity for public comment before it published the manual in its final form. This manual supersedes the first Technical Assistance Manual dated July 19, 2005, and is available for download, in PDF format, from *http://airconsumer.dot.gov*.

C. Scope of This Manual

Organization

This manual is organized chronologically to reflect the steps in a passenger's trip and the associated requirements of Part 382, as follows:

- Planning a flight,
- At the airport,
- Boarding, deplaning, and making connections,
- Assistance services during a flight, and
- Responding to disability-related complaints.

This manual also contains the following tools to assist you in quickly and easily finding the answer to your questions:

- A Table of Contents at the front of the manual;
- An Alphabetical Index at the back of the manual; and
- A Part 382 Index listing the citations to Part 382 at the back of the manual.

In addition, the following appendixes appear at the end of the manual:

- Appendix I: Table of Effective Dates
- Appendix II: Tips for Air Travelers with Disabilities as they relate to the most commonly-used accommodations, facilities, and services that carriers are required to make available to such passengers;
- Appendix III: Airline Management-Related Issues addressing topics applicable mainly to carrier management, as opposed to frontline customer service personnel;

Applicability

As with Part 382, the topics discussed in this manual apply to both U.S. and foreign carriers unless otherwise specified. (§ 382.7(e))

Web Links

The following web links are provided for you to review and download information related to Part 382 and/or the ACAA:

- A list of frequently asked questions and answers (*http://airconsumer.dot.gov/SA_Disability.htm*)
- A list of recent DOT enforcement orders related to the ACAA (*http://airconsumer.dot.gov/SA_Disability.htm*)
- The full text of Part 382 (*http://airconsumer.dot.gov/SA_Disability.htm*)
- A listing of conflict of law waiver determinations (*http://www.regulations.gov under Docket Number DOT–OST–2008–0272)*
- A listing of equivalent alternative determinations (*http://www.regulations.gov under Docket Number DOT–OST–2008–0273)*
- Guidance concerning service animals (*http://airconsumer.ost.dot.gov/rules/20030509.pdf*)
- Guidance on transporting service animals to the United Kingdom (*http://airconsumer.ost.dot.gov/rules/UK–ServiceAnimalGuidance.pdf*)

Legal Requirements and Customer Service

This manual highlights the difference between actions you must take to comply with Part 382 and actions that you may choose to take to provide superior customer service to passengers with disabilities. Legal requirements are generally designated by the word ''must'' in the manual. Words such as ''should'' or ''may,'' indicate accommodations that Part 382 does not require but that DOT recommends and that you may decide to provide as a matter of good customer service.

Safety

Where applicable, this manual discusses how to properly and lawfully consider aircraft and passenger safety when providing transportation to passengers with disabilities. Part 382 does not require or authorize you to disregard Federal Aviation Administration (FAA), Pipeline and Hazardous Materials Safety Administration (PHMSA), or foreign government safety regulations. Where an FAA, PHMSA, or foreign government safety regulation requires different treatment of passengers with disabilities or other restrictions, Part 382 states you must comply with the FAA, PHMSA, or foreign government safety regulation. For example, if an FAA safety rule provides that only persons who can perform certain functions can sit in an exit row, then you must request that an individual unable to perform those functions (regardless of whether that individual has a disability) sit in another row. If the passenger refuses, you may properly deny transportation to such passengers. (§ 382.7(g))

However, where an optional carrier action that is not required by FAA, PHMSA, or foreign government safety rules would result in different treatment of passengers with disabilities, or in other restrictions, then the ACAA and the provisions of Part 382 prohibit you from implementing the optional carrier action.

Example: Suppose ABC Airways required only passengers with disabilities—not all passengers—to provide correct answers to a quiz about the content of a safety briefing and a passenger with a disability either refused to respond or failed such a quiz. It would *not* be appropriate to deny transportation to a passenger with a disability on such grounds unless the carrier's policies and procedures consistently treated all passengers in a similar manner.

In short, Part 382 is consistent with FAA, PHMSA, and foreign government safety requirements, as it requires you to comply with those regulations and ensure that the safe completion of the flight or the health and safety of other passengers are not jeopardized. Determinations about whether an FAA, PHMSA, or foreign government regulation requires different treatment of a passenger with a disability for safety reasons often depend on the circumstances you encounter. Therefore, it is important that you seek information from passengers with

disabilities and their traveling companions and make a reasonable judgment considering all available information.

The FAA safety regulations can be found in 14 CFR parts 1 through 199, and in FAA guidance materials that provide additional information about these regulations (see *http://www.faa.gov*, click on Federal Aviation Regulations (FAR) under Regulations and Guidelines). The applicable PHMSA regulations can be found in 49 CFR parts 171 through 185 and PHMSA guidance materials that provide additional information about these regulations (see *http://www.phmsa.dot.gov*, click on Regulations under Promoting Safety and Security). For foreign government safety requirements consult the applicable government's civil aviation authority.

Security

This manual addresses security procedures which affect or may affect the types of accommodations and services provided to passengers with disabilities. You must comply with Transportation Security Administration (TSA) regulations and foreign government security regulations having a legally mandatory effect applicable to you. (§ 382.7(g)) [4]

Part 382 is consistent with security requirements mandated by the TSA. For example, TSA has strict rules as to who can go beyond the airport screening checkpoints, but these TSA rules are consistent with Part 382 and do not invalidate your obligation to provide boarding and deplaning assistance requested by passengers with disabilities, including assistance beyond airport screening checkpoints. You have discretion in how that assistance is provided. You can provide (1) A ''pass'' allowing an individual who needs to assist a passenger with a disability to go through the airport screening checkpoint without a ticket; (2) assistance directly to the passenger; or (3) both. For foreign government security requirements, refer to screening procedures established by the law of the country in which the airport is located.

Contractors

This manual recognizes the important role that contractors play in providing services, equipment, and other accommodations to passengers with disabilities. A contractor is an entity that has a business arrangement with a carrier to perform functions that the ACAA and Part 382 would otherwise require the carrier to perform with its own employees. Contractors provide a variety of services on behalf of carriers in furnishing assistance to persons with disabilities. For example, contractors often provide—

- Wheelchair service;
- Assistance to passengers with disabilities in getting on and off aircraft;
- Transportation to passengers with disabilities between departure gates; and
- Ground handling of passengers' wheelchairs and other assistive devices.

Contractors must provide the same services, equipment, and other accommodations as those required of a carrier and its employees under the ACAA and Part 382. As an employee of a contractor, you are required to follow the ACAA and Part 382 when providing services, equipment, and other accommodations to passengers with disabilities. If you do not follow the ACAA and Part 382, the carrier is subject to DOT enforcement action for your failure to comply with those mandates. In essence, although a carrier may contract out various services and accommodations required by Part 382, a carrier may not contract away its responsibilities to ensure compliance with the rule.

ACCESS

- ACCESS [5] is a step-by-step process for resolving issues involving passengers with disabilities. A detailed discussion of ACCESS appears in Chapter 6: Assisting Air Travelers with Disabilities with their Complaints. Whether the issue involves the requirements of the ACAA and Part 382, customer service, or both, the ACCESS checklist will be useful in identifying the needs of passengers with disabilities and determining what accommodations carriers are required to provide. See Chapter 6, Section C, Access, An Approach for Resolving Complaints.

Training

- DOT regards thorough training of carrier personnel who interact with passengers with disabilities as vital for good service to those passengers and compliance with the ACAA and Part 382. A detailed discussion of employee/contractor training requirements can be found in Chapter 8: Personnel Training and Appendix II, Airline Management-Related Issues. In addition, the DOT has developed an interactive model training program (MTP) on the ACAA and Part 382. You can view this module at *http://airconsumer.dot.gov*.

D. Keyword Definitions

Following is a list of keyword definitions to help you fully understand the information in this manual.

Air Carrier Access Act (ACAA): The Air Carrier Access Act of 1986, as amended, is the statute that provides the principal authority for 14 CFR part 382. The ACAA prohibits discrimination by U.S. and foreign carriers against qualified individuals with disabilities.

Air Transportation: Interstate or foreign air transportation, or the transportation of mail by aircraft, as defined in 49 U.S.C. 40102. (§ 382.3).

Assistive Device: Any piece of equipment that assists a passenger with a disability to cope with the effects of his or her disability. Such devices are intended to assist a passenger with a disability to hear, see, communicate, maneuver, or perform other functions of daily life, and may include medical devices and medications. (§ 382.3).

Battery-powered mobility aid: An assistive device that is used by individuals with mobility impairments, such as a wheelchair, a scooter, or a Segway when it is used as a mobility device by a person with a mobility-related disability. (§ 382.3).

Carrier: A U.S. citizen (''U.S. carrier'') or foreign citizen (''foreign carrier'') that undertakes, directly or indirectly, or by a lease or any other arrangement, to engage in air transportation. (§ 382.3).

Commuter carrier: An air taxi operator as defined in 14 CFR Part 298 that carries passengers on at least five round trips per week on at least one route between two or more points according to its published flight schedules that specify the times, days of the week and places between which those flights are performed. (§ 382.3).

Complaints Resolution Official (CRO): An individual designated by a carrier who has the authority to resolve disability-related complaints on behalf of the carrier. The CRO must be thoroughly familiar with—

(1) The requirements of Part 382;

(2) The carrier's policies and procedures addressing Part 382; and

(3) The provision of services, facilities, and accommodations to passengers with disabilities.

A CRO must be available (1) in person at the airport; or (2) via telephone and Text Telephones (TTY), or a similarly effective technology, at all times the carrier is operating. As a foreign carrier, you must make a CRO available as noted above at each airport serving flights you

[4] The Transportation Security Administration has developed a Web site and a hotline for travelers with disabilities and medical conditions. The Web site is *http://www.tsa.gov/travelers/airtravel/disabilityandmedicalneeds/tsa_cares.shtm* and the hotline phone number is 1–855–787–2227.

[5] ACCESS is a memory aid to Ask, Call, Check, Evaluate, Solve, and Satisfy, for use when resolving complaints.

operate that begin and end at a U.S. airport. (§ 382.151).

Conflict of Law Waiver: Upon the request of a carrier, DOT may determine there is a contradiction between a Part 382 requirement and an applicable foreign legal mandate that precludes the carrier from compliance with both legal requirements. If DOT makes such a determination, the carrier would continue to follow the binding foreign legal mandate rather than the conflicting Part 382 provision. (§ 382.9).

Contractor: A contractor is an entity that has a business arrangement with a carrier to perform functions that the carrier would otherwise be required to perform with its own employees under the ACAA and Part 382. For example, carriers often have business arrangements with companies to provide wheelchair service to passengers with disabilities or to handle baggage and assistive devices. (§ 382.11).

Contractor Employee: An individual that works for an organization that has a business arrangement with one or more carriers to provide services, facilities, and other accommodations to passengers with disabilities. (§ 382.11).

CPAP machine: A continuous positive airway pressure machine. (§ 382.3).

Department or DOT: The United States Department of Transportation. (§ 382.3).

Direct Threat: A significant risk to the health or safety of others that cannot be eliminated by a modification of policies, practices, or procedures, or by the provision of auxiliary aids or services. (§ 382.3).

DOT Disability Hotline or Hotline: DOT's toll-free telephone hotline system that provides general information to consumers about the rights of air travelers with disabilities, responds to requests for printed consumer information, and assists air travelers with time-sensitive disability-related issues. The hours for the hotline are 9 a.m. to 5 p.m. eastern time, Monday through Friday except Federal holidays. Air travelers who experience disability-related air travel service concerns or issues may call the hotline at 1–800–778–4838 (voice) or 1–800–455–9880 (TTY) to receive assistance. Air travelers who would like the DOT to investigate complaints about a disability issue must submit their complaints in writing or via email. (*see http://airconsumer.dot.gov/hotline.htm*).

Equivalent alternative: A policy, practice, or other accommodation that provides substantially equivalent accessibility to passengers with disabilities, compared to compliance with a provision of Part 382. (§ 382.3).

Expected maximum flight duration: The carrier's best estimate of the total duration of the flight from departure gate to arrival gate, including taxi time to and from the terminals, based on the scheduled flight time and factors such as (1) Wind and other weather conditions forecast; (2) anticipated traffic delays; (3) one instrument approach and possible missed approach at destination; and (4) any other conditions that may delay arrival of the aircraft at the destination gate. (§ 382.3).

FAA: The Federal Aviation Administration, an operating administration of the DOT. The FAA's mission is to provide the safest, most efficient aerospace system in the world. (*http://www.faa.gov* and § 382.3).

Facility: A carrier's aircraft and any portion of an airport that a carrier owns, leases, or controls (for example, structures, roads, walks, parking lots, ticketing areas, baggage drop-off and retrieval sites, gates, other boarding locations, jet bridge) normally used by passengers or other members of the public. (§ 382.3).

High-Contrast Captioning: Captioning that is at least as easy to read as white letters on a consistent black background. (§ 382.3).

Indirect Carrier: A person not directly involved in the operation of an aircraft who sells air transportation services to the general public other than as an authorized agent of a carrier. (§ 382.3).

Individual with a Disability: Any individual who—

- Has a physical or mental impairment that, on a permanent or temporary basis, substantially limits one or more major life activities;
- Has a record of a physical or mental impairment that, on a permanent or temporary basis, substantially limits one or more major life activities; or
- Is regarded as having a physical or mental impairment that, on a permanent or temporary basis, substantially limits one or more major life activities. (§ 382.3).

On-Demand Air Taxi: An air taxi operator that carries passengers or property and is not a ''commuter carrier'' as defined above. (§ 382.3).

PHMSA: The Pipeline and Hazardous Materials Safety Administration, an operating administration of the Department of Transportation. (*http://www.phmsa.dot.gov* and § 382.3).

POC: A portable oxygen concentrator. (§ 382.3).

Qualified Individual With a Disability: An individual with a disability—

(1) Who, as a passenger—

- Purchases, offers to purchase, or otherwise validly obtains a ticket for air transportation;
- Presents himself or herself at the airport for the purpose of traveling on the flight; and
- Meets reasonable, nondiscriminatory contract of carriage requirements applicable to all passengers.

(2) Who accompanies or meets a traveler, using ground transportation or terminal facilities, or seeks to obtain information about schedules, fares, reservations, or policies and takes those actions necessary to use facilities or services offered by a carrier to the general public, with reasonable accommodations, as needed, provided by the carrier. (§ 382.3).

Scheduled Service: Any flight scheduled in the current edition of the Official Airline Guide, the carrier's published schedule, or the computer reservation system used by the carrier. (§ 382.3).

Service Animal: Any animal that is individually trained or able to provide assistance to a qualified person with a disability or any animal shown by documentation to be necessary to support a passenger with an emotional or mental disability.

Dogs, cats, and monkeys are among the types of animals that have been trained to act as service animals. Service animals may assist people with disabilities by, for example—

- Guiding persons with vision impairments;
- Alerting persons with hearing impairments to specific sounds;
- Alerting persons with epilepsy of imminent seizure onset;
- Pulling a wheelchair;
- Carrying items a passenger cannot readily carry while using his or her wheelchair;
- Assisting persons with mobility impairments to open and close doors, retrieve objects, transfer from one seat to another, and maintain balance; and
- Providing support for persons with emotional or mental disabilities.

(§ 382.117 and Appendix III, Guidance Concerning Service Animals, and Chapter 3, Section D, Service Animals.).

Text Telephones (TTY): TTYs are devices that allow individuals who are unable to use a regular telephone to make or receive telephone calls by enabling them to type their conversations. (Chapter 4, Section D, Accommodations for Air Travelers with Vision or Hearing Impairments).

Transportation Security Administration (TSA): An administration within the Department of Homeland Security that is charged with protecting the Nation's transportation systems to ensure freedom of movement

for people and commerce. (*http://www.tsa.gov* and § 382.3).

United States or U.S.: The United States of America, including its territories and possessions.

E. Acronyms

Following is a list of acronyms used in this manual.

ACAA Air Carrier Access Act
ACCESS Ask, Call, Check, Evaluate, Solve, and Satisfy
ADAAG Americans with Disabilities Act Accessibility Guidelines
AIDS Acquired Immune Deficiency Syndrome
AIR-21 Wendell H. Ford Aviation Investment and Reform Act for the 21st Century
ATP Advanced Turboprop
CBP U.S. Customs and Border Protection
CFR Code of Federal Regulations
CPAP Continuous Positive Airway Pressure
CRO Complaints Resolution Official
DEFRA U.K. Department for Environment Food and Rural Affairs
DOJ Department of Justice
DOT Department of Transportation
DSM–IV Diagnostic and Statistical Manual of Mental Disorders
FAA Federal Aviation Administration
FAQ Frequently Asked Questions
FAR Federal Aviation Regulations
HIV Human Immunodeficiency Virus
IATA International Air Transport Association
MTP Model Training Program
NPRM Notice of Proposed Rulemaking
OST Office of the Secretary of Transportation
PHMSA Pipeline and Hazardous Materials Safety Administration
PNR Passenger Name Record
POC Portable Oxygen Concentrator
RMOP Required Method of Operation
RTCA Radio Technical Commission for Aeronautics
SARS Severe Acute Respiratory Syndrome
SFAR Special Federal Aviation Regulation
SMS Short Message Service
SSR Special Service Request
TSA Transportation Security Administration
TTY Text Telephones

Chapter 2: Learning the Basics About the Law Protecting Air Travelers With Disabilities

A. The Statute and the Regulation
B. Applying Part 382 Requirements
C. Questions on Foreign Carrier Flights
D. Conflicts of Law Waivers
E. Equivalent Alternative Determinations
F. Assisting Passengers With Disabilities
G. Part 382 Highlights

A. The Statute and the Regulation

• What does the Air Carrier Access Act (ACAA) say? The ACAA prohibits U.S. and foreign air carriers from discriminating against a qualified individual with a disability based on such disability in providing air transportation. See Chapter 1, Section C of this manual for a definition of a qualified individual with a disability. (49 U.S.C. 41705).

• What is Title 14, Code of Federal Regulations (14 CFR) Part 382 (Part 382)? Part 382 is a detailed set of rules that define U.S. and foreign air carriers' responsibilities under the ACAA, as amended. Part 382 ensures that individuals with disabilities will be treated without discrimination, and requires U.S. and foreign air carriers (under certain conditions) to make aircraft, other facilities, and services accessible and take steps to accommodate a passenger with a disability. (§ 382.1).

B. Applying Part 382 Requirements

• Who is protected by Part 382? Part 382 protects three groups of individuals with disabilities:

(1) Individuals with a physical or mental impairment that, on a permanent or temporary basis, substantially limits one or more major life activities;

(2) Individuals with a record of such impairment; and

(3) Individuals who are regarded as having such impairments, whether they have the impairment or not.

(§ 382.3 and 49 U.S.C. 41705).

• Who must comply with Part 382? The following organizations and individuals must comply with Part 382:

(1) A U.S. air carrier and its employees (for example, ticket agents, gate agents, flight attendants, pilots, baggage handlers) with respect to all operations and aircraft, regardless of where those operations take place (unless otherwise noted in Part 382).

(2) A foreign air carrier, its employees (such as ticket agents, gate agents, flight attendants, pilots, and baggage handlers), and its aircraft for flights that begin or end at a U.S. airport. Part 382 does not apply to a foreign carrier for flights operating between two foreign points. However, a U.S. air carrier that participates in a codesharing arrangement with a foreign air carrier with respect to flights between two foreign points is responsible for ensuring compliance with Part 382, Subparts A through C, F through H, and K with respect to passengers traveling under its code on such a flight.

(3) An authorized agent of a carrier (such as travel agents).

(4) An organization and its employees that have business arrangements with a carrier to provide disability-related services (for example, wheelchair service, baggage handling).

(5) An indirect air carrier and its employees (such as public charter operators) that provide facilities or services for other carriers that are covered by §§ 382.17 through 157. (§§ 382.3, 382.7(a), (c), and (f), 382.11(b) and 382.15).

• When does Part 382 apply to U.S. carriers and foreign carriers? U.S. carriers and foreign carriers were required to comply with the requirements of current Part 382 on May 13, 2009, except as otherwise noted in individual sections of Part 382. (§ 382.5) See Appendix I for a table of exceptions to the May 13, 2009, effective date.

• What is the difference between an indirect air carrier and an agent? An indirect air carrier indirectly engages in air transportation by selling the services of a direct air carrier. (§ 382.3) An agent is an entity that has lawful authority to act on behalf of the operating carrier, indirect air carrier, or on behalf of the prospective passenger. An agent typically sells the product of a disclosed principal (e.g., a seat on a scheduled airline or on a charter flight), offering it at the price and terms set by the principal.

Example: A tour operator or an air freight forwarder contracts for space on a wholesale level with an airline and the tour operator or air freight forwarder then re-sells space on that flight on a retail basis, setting their own price and terms, bearing the entrepreneurial risk of profit or loss rather than acting as an agent, and controlling the inventory and schedule.

On the other hand, an agent, such as a retail travel agent, sells a product such as a seat on a scheduled airline or a charter flight, at a price and terms set by the airline. The travel agent is acting as an agent of the airline and is not an indirect air carrier. Concessionaires, suppliers, and other participants in the air travel system also are not indirect air carriers.

• Do carriers have to make contractors comply with Part 382 requirements? Yes, as a carrier, you must ensure that your contractors providing services to the public meet Part 382 requirements just as if you were performing those functions yourself. While you may contract out services, you may not contract away responsibilities. You must include an assurance of compliance with Part 382 in your contracts with any contractors who provide services to the public that are subject to Part 382 requirements. For a U.S. carrier, an assurance of compliance must be included in your contracts with U.S. travel agents but not foreign travel agents. The Department of Transportation expects you to monitor the performance of your contractors to ensure that the contractors' performance complies with Part 382. (§ 382.15).

C. Questions on Foreign Carrier Flights

• For a passenger with a disability traveling on a foreign carrier, what is considered a ''flight'' covered under Part 382? Flight means a continuous journey in the same aircraft or with one flight number that begins or ends at a U.S. airport. (§ 382.7(b)).

The following are examples of flight scenarios involving foreign carriers.

Example 1: A passenger books a nonstop flight on a foreign carrier from New York to Frankfurt, or Frankfurt to New York. Each of these is a ''flight'' covered by Part 382.

Example 2: A passenger books a trip on a foreign carrier from New York to Prague. The foreign carrier flies nonstop to Frankfurt. The passenger deplanes in Frankfurt and boards a connecting flight (with a different flight number), on the same foreign carrier or a different carrier, which flies to Prague. The New York–Frankfurt leg of the trip is a ''flight'' covered by Part 382; the Frankfurt–Prague leg is not a covered flight. On the reverse routing, the Prague–Frankfurt leg is not a covered flight for purposes of Part 382, while the Frankfurt–New York leg is a covered flight.

Example 3: A passenger books a trip on a foreign carrier from New York to Prague. The aircraft stops for refueling and a crew change in Frankfurt. If, after deplaning in Frankfurt, the passengers originating in New York reboard the aircraft (or a different aircraft, assuming the flight number remains the same) and continue to Prague, they remain on a covered flight for purposes of Part 382. This is because their transportation takes place on a direct flight between New York and Prague, even though it had an interim stop in Frankfurt. This example also would apply in the opposite direction (Prague to New York via Frankfurt).

Example 4: In Example 3 directly above, the foreign carrier is not subject to coverage under Part 382 with respect to a Frankfurt originating passenger who boards the aircraft and flies to Prague, or a Prague-originating passenger who deplanes in Frankfurt and does not continue to New York.

• Does Part 382 apply to foreign carriers operating between two foreign points under a codeshare arrangement with a U.S. carrier? No, Part 382 does not generally apply to foreign carriers operating between two foreign points and transporting passengers flying under the U.S. carrier's code. However, Part 382 applies to the U.S. carrier with respect to passengers traveling under its code. A U.S. carrier, not the foreign carrier, would be responsible for any violation of the service provisions of Subparts A through C, F through H, and K of Part 382 for a passenger traveling under the U.S. carrier's code. (§ 382.7(c)).

• Does Part 382 apply to foreign carrier charter flights? A charter flight on a foreign carrier originating from a foreign airport to a U.S. airport and returning to a foreign airport would not be covered if the carrier does not board any new passengers in the United States for the return flight. (§ 382.7(d)).

D. Conflicts of Law Waivers

• What may a carrier do if a provision of a foreign nation's law conflicts with Part 382 requirements? Part 382 contains a conflict of laws waiver provision to address conflicts with legally binding foreign legal mandates. For example, as a carrier, you may request a waiver from a Part 382 requirement if a foreign law—(1) Requires you to do something prohibited by Part 382 or (2) prohibits you from doing something required by Part 382. Your U.S. carrier code share partner may file a waiver request on your behalf when a foreign law conflicts with a service-related provision of Part 382. Note that a foreign carrier's or foreign government's policy, authorized practice, recommendation, or preference is not an appropriate basis for a conflict of laws waiver request. In addition, if you have discretion in complying with Part 382 under the foreign law then you must exercise that discretion by complying with Part 382. (§ 382.9).

• What must a conflicts of law waiver request include? A conflicts of law waiver request must include: (1) A copy of the conflicting foreign law (in English); (2) a description of how the law applies and how it precludes you from complying with Part 382; and (3) your proposal for an alternative means of meeting the objective of the requirement or a justification of why it would be impossible to meet the requirement in any way. (§ 382.9(c)).

• Is there a deadline for a carrier to file a conflict of law waiver request? DOT sought to encourage carriers to conduct a due diligence review of foreign legal requirements that may conflict with Part 382. Accordingly, foreign carriers that filed waiver requests by September 10, 2008 (within 120 days of the publication date of the rule (May 13, 2008)), had a commitment from DOT that it would not take any enforcement action related to implementing the foreign law in question pending DOT's response to the waiver request. (§ 382.9(e)).

• Is a carrier subject to enforcement action while a conflict of law waiver request submitted after September 10, 2008, is under DOT review? If the conflicting foreign law did not exist on September 10, 2008, you may continue to implement the policy or practice that is the subject of your request until the DOT responds to your request. The DOT will not take enforcement action with respect to your policy or practice while the waiver request is under its review. However, the DOT may begin an enforcement action if it finds that a carrier's waiver request: (1) is frivolous or dilatory, (2) has not been submitted with respect to a certain policy or practice, or (3) has been previously denied and the carrier continues to follow the denied policy or practice. (§ 382.9(e) through (g)).

• What must DOT determine to grant a conflicts of law waiver request? The DOT may grant the waiver request, or grant the request subject to conditions, if DOT determines: (1) The foreign law applies; (2) the foreign law does preclude compliance with a provision of Part 382; and (3) the carrier has provided an effective alternative means of achieving the Part 382 objective or has demonstrated by clear and convincing evidence that it would be impossible to achieve that objective in any way. (§ 382.9(d)).

E. Equivalent Alternative Determinations

• What is an equivalent alternative determination and when does a carrier have to file one? If, with respect to a specific accommodation, a carrier can demonstrate that what it wants to do will provide substantially equivalent accessibility to passengers with disabilities as compared with literal compliance with a particular provision of Part 382, it can file for an equivalent alternative determination. If the DOT agrees, it will determine that the carrier can comply with the rule using its alternative accommodation. Carriers must comply with Part 382 and cannot use their proposed equivalent alternative until and unless DOT approves it. (§ 382.10).

• How does a carrier apply for an equivalent alternative determination? As a U.S. carrier or foreign carrier, you may apply to the DOT for a determination that you are providing an alternative to passengers with disabilities. Your application must be in English and include: (1) A citation of the specific provision to which you are proposing an equivalent alternative; (2) a detailed description of the alternative policy, practice, or other accommodation you are proposing to use in place of the Part 382 requirement cited above; and (3) an explanation of how it provides substantially equivalent accessibility to passengers with disabilities.

If the DOT grants your application, you may comply with Part 382 through implementing your equivalent alternative. If the DOT denies your application, you must comply with Part 382 as written. (§ 382.10).

F. Assisting Passengers With Disabilities

• What is a physical or mental impairment? Physical impairment includes—(1) Any physiological disorder or condition; (2) cosmetic disfigurement; or (3) anatomical loss affecting one or more of the following body systems:

○ Neurological;
○ Musculoskeletal;
○ Special sense organs;
○ Respiratory, including speech organs;
○ Cardiovascular;
○ Reproductive;
○ Digestive;
○ Genitourinary;
○ Hemic and lymphatic;
○ Skin; and
○ Endocrine.

Examples of physical impairments include—

○ Orthopedic, visual, speech, and hearing impairments;
○ Cerebral palsy;
○ Epilepsy;
○ Muscular dystrophy;
○ Multiple sclerosis;
○ Cancer;
○ Heart disease;
○ Diabetes; and
○ Human Immunodeficiency Virus (HIV).

Mental impairments include any mental or psychological disorder, such as mental retardation, organic brain syndrome, emotional or mental illness, and specific learning disabilities. (§ 382.3).

• What is not considered a physical or mental impairment? Physical characteristics such as the color of one's eyes, hair, or skin; baldness; and left-handedness do not constitute physical impairments. Similarly, neither age nor obesity alone constitutes a physical impairment. Disadvantages due to cultural or economic factors are not covered by Part 382. Moreover, the definition of ''physical or mental impairment'' does not include personality traits such as poor judgment or a quick temper, where these are not symptoms of a mental or psychological disorder.

• What is a substantial limitation on one or more major life activities? To qualify as a ''disability'' under Part 382 a condition or disease must substantially limit a major life activity. Major life activities include, activities such as—

○ Caring for oneself,
○ Performing manual tasks,
○ Walking,
○ Seeing,
○ Hearing,
○ Speaking,
○ Breathing,
○ Learning, and
○ Working. (§ 382.3).

• When does an impairment ''substantially limit'' a major life activity? There is no absolute standard for determining when an impairment is a substantial limitation. Some impairments obviously limit the ability of an individual to engage in a major life activity as noted in the following examples.

Example 1: A person who is deaf is substantially limited in the major life activity of hearing.

Example 2: A person with traumatic brain injury may be substantially limited in the major life activities of: (a) Caring for himself or herself; and (b) working, because of memory deficiency, confusion, contextual difficulties, and the inability to reason appropriately.

Example 3: An individual who is paraplegic may be substantially limited in the major life activity of walking.

• Are temporary mental or physical impairments covered by Part 382? Yes. The definition of individual with a disability addresses any individual who has a temporary physical or mental impairment. (§ 382.3) See the following example:

Example: While on a skiing trip, Jane breaks her leg and is placed in a cast that keeps her from bending her leg and walking without using crutches. Jane will eventually recover the full use of her leg, but in the meantime, she is substantially limited in the major life activity of walking. Because Jane's broken leg will substantially limit a major life activity for a period of time, Jane would be considered to have a disability covered by Part 382 during that period. As a carrier, you would be required to provide her certain services and equipment under Part 382 if requested (for example, boarding and deplaning assistance, connecting wheelchair assistance, seating with additional leg room to the extent required by Part 382, and safe stowage of her crutches in the aircraft cabin in close proximity to her seat).

• Who is a person with a ''record of'' a disability under Part 382? Part 382 protects from discrimination an individual (1) who has a ''record of'' (a history of) a physical or mental impairment that substantially limits one or more major life activities or (2) who has been classified, or misclassified, as having such an impairment. Therefore, an individual who does not have a current actual impairment that substantially limits a major life activity would still be protected under Part 382 based upon a past diagnosis (or a misdiagnosis) of an impairment that substantially limits a major life activity. Individuals with a history of cancer or epilepsy are examples of people with a record of impairment. (§ 382.3) The following example illustrates such a situation:

Example: Adam, a passenger who has had severe epileptic seizures in the past that rendered him unable to work, is denied transportation by carrier personnel because of their concern that he may have a seizure on board the aircraft. This denial of transportation would be unlawful if based solely on the fact that Adam has had past seizures, because epilepsy may be controlled by medication. Carrier personnel can lawfully deny transport to Adam only if they reasonably believe, based on the information available, that his seizure disorder poses a real safety risk to him, or is a direct threat to other passengers.

• When is a person ''regarded as'' having a disability? Part 382 protects an individual who is ''regarded as'' having a physical or mental impairment that substantially limits a major life activity, whether or not that person actually has an impairment. A person can be ''regarded as'' disabled if—

(1) His or her non-limiting or slightly limiting impairments are treated by an air carrier as substantially limiting;

(2) He or she has no impairments but is treated by an air carrier as having a substantially limiting impairment; or

(3) His or her impairments become substantially limiting because of the attitudes of others toward such impairments. (§ 382.3).

See the following two examples.

Example 1: Carrier personnel deny John, an individual with a mild heart condition controlled by medication, transportation because they believe that flying will cause him to have heart problems requiring the pilot to divert the aircraft during the flight. John's condition does not substantially limit any major life activity. John has informed the air carrier personnel that his heart condition is controlled by medication and that for the past five years he has flown on a near weekly basis without incident. Even though John does not actually have an impairment that substantially limits a major life activity, he is protected by the provisions of Part 382 because he is treated as though he does. The air carrier personnel's refusal to provide transportation to John must be reasonable under the facts and circumstances presented. Arguably, excluding John from the flight was unreasonable because he had informed the air carrier employee that he was taking medication and that he had flown frequently in the recent past without incident. The reasonableness of the decision depends on John's credibility and any additional information provided. Regardless of the reasonableness of the decision, the air carrier employee is legally required under § 382.19(d) to provide a written explanation to John within 10 calendar days of the refusal of transportation detailing the specific safety or other reason(s) for excluding John from the flight.

Example 2: Karen, an individual born with a prominent facial disfigurement, has been refused transportation on the grounds that

her presence has upset several passengers who have complained to gate agents about her appearance. Karen's physical disfigurement becomes substantially limiting only because of the attitudes of others and she is protected by the provisions of Part 382. Refusing to provide transportation to Karen would violate § 382.19(b) because you must not refuse to provide transportation to a qualified individual with a disability, such as Karen, solely because her appearance may offend or annoy other passengers. As in example 1 above, and regardless whether the decision to refuse transportation was correct, a carrier must provide Karen with a written explanation of the specific basis for the refusal within 10 calendar days of the incident.

• When am I required to provide disability-related accommodations to an individual? You are required to provide such an accommodation when—

(1) An individual with a disability or someone acting on his or her behalf, such as a travel companion, family member, or friend, requests an accommodation required by Part 382 or

(2) You offer such a required accommodation to a passenger with a disability and he or she accepts such accommodation.

• How do I determine whether a person is an individual with a disability? Provide an opportunity for the passenger to self-identify by asking how you can best assist him or her. (See for example, §§ 382.81, 382.85, 382.87, 382.91, 382.93, 382.111).

• May I ask an individual what his or her disability is? Generally, no. However, clarifying the nature of a disability may be required to determine if a passenger is entitled to a particular seating accommodation under sections 382.81 through 382.87. You may not make inquiries about an individual's disability or the nature or severity of the disability. However, you may ask questions about an individual's ability to perform specific air travel-related functions, such as boarding, deplaning, and walking through the airport. For example—

You may not ask a person	*What is your disability?*
	Are you deaf?
You may ask	*Can you walk from the gate area to your aircraft seat?*
	Are you able to transfer from the aisle chair over a fixed aisle seat armrest?
	Can you walk from this gate to your connecting gate?
	Do you need me to notify you if I make any announcements over the public address speaker?" (write a note if necessary)

Example: Susan asks for a bulkhead seat because the condition of her leg requires additional legroom. You may ask, "Are you unable to bend your leg or is your leg fused or immobilized?" For a passenger with a fused or immobilized leg, the carrier is required to provide a bulkhead seat or other seat that provides more legroom than other seats on the side of an aisle that better accommodates the individual's disability. (§ 382.81(d))

• How do I assist a passenger with a disability? Ask the passenger how you can best assist him or her. A passenger with a disability has the most information about his or her abilities, limitations, level of familiarity with the airport and air carrier, and needs in connection with air travel.

G. Part 382 Highlights

• What are some of the requirements of Part 382 that I should be aware of? Following are some of the principle requirements of Part 382. It is important to note that the list of Part 382 requirements below is not meant to be exhaustive. Rather, it is a list of requirements governing situations that you are likely to encounter regularly. In addition, these requirements may not be applicable in instances where a legally binding conflicts of law waiver exists. You should refer to the specific sections cited below for exceptions to these requirements.

○ You must not discriminate against passengers with a disability. (§ 382.11(a)(1)) .

○ You must not require a passenger with a disability to accept special services (including preboarding) they do not request. (§ 382.11(a)(2)). Instead, you may ask a person if he or she would like a particular service, facility, or other accommodation. However, you may require preboarding as a condition to receive certain seating or cabin stowage accommodations. (§§ 382.83(c), 382.85(b), and 382.123(a)).

○ You must not exclude a passenger with a disability from or deny the individual the benefit of any air transportation or related services that are available to other persons. (§ 382.11(a)(3)). For example, if you choose to provide ground transportation and overnight accommodations to passengers because of a flight cancellation, you must ensure that the ground transportation to the hotel, and the hotel itself, are accessible to a passenger with a disability.

○ You must not take any adverse action against an individual, such as refusing transportation, because an individual asserts, on his or her own behalf, or on behalf of another individual, rights protected under Part 382 or the ACAA. (§ 382.11(a)(4)).

○ You must not limit the number of passengers with disabilities on a particular flight.[6] (§ 382.17).

○ You must not refuse transportation to a passenger solely based on a disability. (§ 382.19).

○ You must provide transportation to a passenger with a disability who has an impairment that affects his or her appearance or results in involuntary behavior except under limited circumstances specified below. You must provide transportation to such passengers with disabilities even if the disability may offend, annoy, or inconvenience crewmembers or other passengers. (§ 382.19(b)). However, if the person's disability results in involuntary behavior that would or might adversely affect the safety of the flight, then the person may be refused transportation. (§ 382.19(c)).

○ You may refuse transportation to a passenger with a disability if transportation of that passenger would—

(1) Endanger the safety of the aircraft or the health or safety of its passengers or

(2) Violate a Federal Aviation Administration (FAA) or Transportation Security Administration (TSA) regulation or applicable requirement of a foreign government. (§ 382.19(c)).

○ You must not require a passenger with a disability to travel with a safety assistant or to present a medical certificate, except in very limited circumstances. (§§ 382.23(a) and 382.29).

○ You must not require a passenger with a disability to sign a release or waiver of liability to receive transportation or services or accommodations for a disability. (§ 382.35(a)).

○ You must not exclude a passenger with a disability from any seat in an exit or other row solely based on his or her disability except to comply with FAA regulations or applicable foreign

[6] The DOT has received Conflict of Laws waiver requests from some foreign carriers asserting that § 382.17 conflicts with the European Aviation Safety Agency's Joint Aviation Regulation–OPS 1.260. Visit *http://www.regulations.gov*, select "Agency Documents," and enter "DOT–OST–2008–0272" to view Conflict of Laws waiver requests.

government safety requirements. (§ 382.87(a)).

FAA regulations establish criteria that must be met for a passenger to occupy a seat in the emergency exit rows. (14 CFR 121.585). There also may be foreign government safety requirements for exit row seating. If a passenger with a disability meets these FAA criteria and applicable foreign government safety requirements, he or she should not necessarily be excluded from sitting in an emergency exit row. As with any other passenger, you must look at the individual passenger with a disability and reasonably assess whether he or she meets the applicable criteria for exit-row seating. (§ 382.87(b)).

○ You must provide prompt boarding, deplaning, and connecting assistance to passengers with disabilities requesting such assistance. As part of this assistance, you must provide, as needed—

(1) Equipment (for example, wheelchairs, electric carts, and aisle chairs);

(2) Personnel (for example, individuals to push wheelchairs and aisle chairs and individuals to assist passengers with disabilities in carrying and stowing their baggage); and

(3) Ramps or mechanical lifts (only required at any U.S. commercial service airport with 10,000 or more annual enplanements where level-entry boarding and deplaning is not available.) (§§ 382.91 and 382.95). See Appendix II for a discussion of the agreements carriers must have with airports for the provision of lifts where level-entry loading bridges are not available. (§ 382.99).

You must allow passengers with disabilities to bring their assistive devices including canes, crutches, walkers; or other assistive devices inside the cabin of the aircraft. Other assistive devices include items such as—

- Prescription medications and any medical devices needed to administer them such as syringes or auto-injectors;
- Vision enhancing devices;
- Continuous positive airway pressure (CPAP) machines, portable oxygen concentrators (POC), respirators, and ventilators, using nonspillable batteries, and
- A folding or collapsible wheelchair (see below).

These assistive devices may be stowed in designated priority stowage areas, in overhead compartments, or under seats consistent with FAA, PHMSA, TSA, or foreign government requirements concerning safety, hazardous materials, and security with respect to stowage of carry-on items. You must not count the number of assistive devices described above toward the carry-on baggage limit. (§ 382.121).

○ On certain aircraft, the carrier must designate a priority stowage space (required dimensions 13″ × 36″ × 42″) for at least one passenger's typical adult-sized folding, collapsible, or break-down manual wheelchair. You must not require removal of the wheels or any other disassembly to fit the manual wheelchair in this priority space. (§ 382.67) This space must be in addition to the overhead compartments and under-seat spaces routinely used for passenger carry-on items. You are not required to stow any kind of electric wheelchair in the aircraft cabin.

This requirement applies if the aircraft—(1) has a designed seating capacity of 100 or more seats and (2) *for a U.S carrier,* was ordered after April 5, 1990, or delivered after April 5, 1992; *for a foreign carrier,* was ordered after May 13, 2009, or delivered after May 13, 2010. (§ 382.67)).

With regard to the priority stowage space, you, as a carrier, must comply with the following:

- A passenger with a disability who takes advantage of the opportunity to preboard may stow his or her wheelchair in this area with priority over other carry-on items brought onto the aircraft by other passengers and crewmembers consistent with FAA, PHMSA, TSA, or foreign government requirements concerning safety, hazardous materials, and security with respect to the stowage of carry-on items. (§ 382.123).
- You must move any item that you or your personnel have placed in the closet or other area designated for priority stowage of carry-on items such as crewmember luggage or a required on-board wheelchair to make room for the passenger's wheelchair even if the items were placed there before the passenger boarded the flight. This includes any items that were placed in the priority stowage area on an earlier originating or connecting flight. (§ 382.123).
- A passenger with a disability who does not preboard may use the priority space to stow his or her wheelchair or other assistive device on a first-come, first-served basis along with other passengers stowing their carry-on items. (§ 382.123).

○ On new aircraft ordered after May 13, 2009, or delivered to carriers after May 13, 2011, carriers are not permitted to use seat-strapping (tying down a wheelchair across a row of seats in an aircraft that does not have the required space for stowing a folding wheelchair in the cabin) as an alternative to designated stowage spaces. Subject to the outcome of the pending rulemaking, you may use seat strapping for manual wheelchairs on existing aircraft that do not have the required space for stowing a folding wheelchair in the aircraft cabin. [7] (§ 382.123).

○ A passenger with a disability who takes advantage of the opportunity to preboard may stow assistive devices other than folding wheelchairs in the priority stowage area over other carry-on items (except folding wheelchairs) brought onto the aircraft by other passengers and crewmembers enplaning at the same airport. Stowing these devices in the priority space must be consistent with FAA, PHMSA, TSA, or foreign government requirements concerning safety, hazardous materials, and security with respect to the stowage of carry-on items. (§ 382.123(a)(2)).

○ You must have a copy of Part 382 available at every airport you serve. For foreign carriers, you must keep a copy of Part 382 and make it available at each airport serving a flight you operate that begins or ends at a U.S. airport. You must make a copy available for review upon request by any member of the public. (§ 382.45(a)). If you have a Web site, it must also provide a notice that consumers may obtain a copy of Part 382 from the DOT—

- By telephone (including the appropriate voice and Text Telephones (TTY) numbers) via a toll-free hotline for air travelers with disabilities or to the Aviation Consumer Protection Division;
- By mail to the Aviation Consumer Protection Division, or
- On the Aviation Consumer Protection Division's Web site (*http://airconsumer.dot.gov*). (§ 382.45(b)).

○ *As a U.S. carrier,* you must provide passengers with vision or hearing impairments who identify themselves as needing assistance prompt access to the same information given to other passengers at the airport. This information includes—

- Flight safety,
- Ticketing,
- Flight check-in,
- Gate assignments,
- Delayed flights,
- Cancellations,
- Schedule changes,
- Boarding information,
- Connections,
- Checking baggage,

[7] On June 3, 2011, the Department published a Notice of Proposed Rulemaking regarding the use of seat-strapping as a method for in-cabin stowage of manual wheelchairs. *See* 76 FR 32107. The Department expects to publish a final rule concerning seat-strapping in 2012.

▪ Volunteer solicitation on oversold flights (offers of compensations for giving up a reservation),
▪ Individuals being paged by airlines,
▪ Aircraft changes, and
▪ Emergencies such as fire or bomb threats.

You must provide this information at each gate, ticketing area, and customer service desk that you own, lease, or control at any U.S. or foreign airport to the extent that this does not interfere with employees' safety and security duties under FAA, TSA, and foreign regulations. (§ 382.53(a)(1)).

As a foreign carrier, you must make the information listed above available at each gate, ticketing area, and customer service desk that you own, lease, or control at any U.S. airport. At foreign airports, you must make the information available only: (1) At gates, ticketing areas, or customer service desks that you own, lease, or control and (2) for flights that begin or end in the United States. (§ 382.53(a)(2)).

As a U.S. or foreign carrier, you and any U.S. airport you use are jointly responsible for providing the required passenger information to passengers with vision or hearing impairments when that airport has control over the gates, ticketing areas, and customer service desks, (§ 382.53(a)(3)).

○ You also must provide passengers with vision or hearing impairments prompt access to the same information given to other passengers on the aircraft. This means information that a reasonable consumer would deem important, such as information on—
▪ Flight safety,
▪ Procedures for takeoff and landing,
▪ Flight delays,
▪ Schedule or aircraft changes,
▪ Diversion to a different airport,
▪ Scheduled departure and arrival time,
▪ Boarding information,
▪ Weather conditions at the destination airport,
▪ Beverage and menu information,
▪ Connecting gate assignments,
▪ Claiming baggage,
▪ Individuals being paged by airlines, and
▪ Emergencies such as fire or bomb threats.

Crewmembers are not required to provide such information if it would interfere with the crewmember's safety duties required under FAA and applicable foreign regulations. (§ 382.119).

○ You must allow a service animal to accompany a passenger with a disability in the aircraft cabin consistent with FAA regulations or applicable foreign government requirements. As a foreign carrier, you are not required to carry service animals other than dogs (except as noted in § 382.7(c) for codeshare flights with U.S. carriers).

You must allow the service animal to sit in close proximity to its user if the service animal does not block the aisle or other emergency evacuation route in violation of FAA regulations or applicable foreign government requirements. Often this will mean that the service animal will sit under the seat in front of the passenger with a disability to avoid obstructing an aisle or other space. Some service animals are held by their users in their arms as an adult would hold a human infant (limited to infants under 2 years of age) of roughly the same size. (§ 382.117).

○ You must designate one or more Complaints Resolution Official (CRO) if you provide service using aircraft with 19 or more passenger seats. The CRO must be available (in person, by telephone, or TTY service) to address disability-related complaints. You must provide a CRO to a passenger even if the passenger does not use the term ''Complaints Resolution Official'' or ''CRO.'' When a passenger with a disability uses words such as ''supervisor,'' ''manager,'' ''boss,'' or ''disability expert'' in connection with resolving a disability-related issue, you must provide a CRO.

As a U.S. carrier, you must make the CRO available at each airport you serve during all times that you operate at that airport.

As a foreign carrier, you must make a CRO available at each airport serving flights you operate that begin or end at a U.S. airport. For carriers that operate flights infrequently, for example, flying from Dulles Airport to a foreign airport at 5 p.m. on Mondays and Thursdays, you do not have to make a CRO available to persons at Dulles Airport on those days you do not operate flights or in the mornings on days when you operate flights. (§ 382.151).

○ You must not charge for services that are required by Part 382. This means, for example, you and your employees and contractors may not ask for a tip when providing wheelchair service to a passenger. You may, however, impose a reasonable charge for services not required by Part 382, that is, optional services. Examples of such optional services include carrier-supplied medical oxygen for use onboard an aircraft or stretcher service. (§ 382.31(a)).

○ You may charge a passenger for the use of more than one seat if the passenger's size or condition, such as use of a stretcher, causes the passenger to occupy more than one seat. (§ 382.31(b)).

○ If you have a Web site that persons use to make reservations or purchase tickets that is inaccessible to a passenger with a disability, you must not charge a fee to the passenger with a disability who is unable to make a reservation or purchase a ticket from your Web site when using another reservation booking method such as by telephone. In addition, if you provide discounts or other benefits to individuals who book a flight online, then that discount or benefit must be given to a passenger with a disability who cannot use the Web site due to his or her disability when he or she buys a ticket using another method. (§ 382.31(c)).

Chapter 3: Assisting Air Travelers With Disabilities Planning a Trip

A. Advance Notice
B. Information About the Aircraft
C. Mobility Aids and Assistive Devices
D. Service Animals
E. Accommodations for Air Travelers With Hearing Impairments
F. Communicable Diseases
G. Medical Certificates
H. Your Obligation To Provide Services and Equipment
I. Safety Assistants

A. Advance Notice

You cannot require a passenger with a disability to provide advance notice of his or her intention to travel except as noted below.

Advance Notice Only for Particular Services and Equipment

You may require up to 48 hours' advance notice (that is, 48 hours before the scheduled departure time of the flight) and 1 hours' advance check-in (that is, 1 hour before the check-in time for the general public) from a passenger with a disability who wishes to receive the following services:

• Transportation of an electric wheelchair on an aircraft with fewer than 60 passenger seats;
• Provision by the carrier of hazardous materials packaging for the battery of a wheelchair or other assistive device;
• Accommodations for 10 or more passengers with disabilities who make reservations and travel as a group;
• Provision of an on-board wheelchair on an aircraft with more than 60 passenger seats that does not have an accessible lavatory for passengers with disabilities who can use an inaccessible lavatory but need an on-board chair to do so;
• Transportation of an emotional support or psychiatric service animal in the cabin;

• Transportation of any service animal on a flight segment scheduled to take 8 hours or more; and

• Accommodation of a passenger with both severe vision and hearing impairments. (§ 382.27(c)(4) through (c)(10)).

Example 1: If you advise passengers to check-in 1 hour before the scheduled departure time of the flight, you may advise a passenger with a disability who seeks one of the accommodations listed above to check-in 2 hours before the scheduled departure time for the flight.

Example 2: While making his reservation, a passenger with a disability gave the reservation agent 48 hours' advance notice that he would need an aisle chair to access the lavatory on his upcoming flight. The flight is on an aircraft with more than 60 passenger seats and it does not have an accessible lavatory. During the telephone call, the reservation agent makes the passenger aware of the fact that the lavatory is inaccessible, but the passenger explains that he can use an inaccessible lavatory if he has access to an aisle chair provided by the carrier. The passenger has complied with the advance notice requirement. Normally this information would have been entered into the passenger's reservation record (also known as the passenger name record (PNR)) by the carrier and the request for an aisle chair would have been handled through that notification process. You are a new gate agent for your carrier and when this passenger approaches you at the gate of the flight and asks about the requested aisle chair, you are not sure how to reply. What should you do?

To begin, as a matter of good customer service, you should tell the passenger that you are not sure but you will find out. You should ask a colleague and, if necessary, contact a Complaints Resolution Official (CRO). When you ask your colleague, you are told that all aircraft with more than 60 passenger seats in your air carrier's fleet are equipped with an in-cabin aisle chair. Once you receive this information, you should assure the passenger that an aisle chair is available so he can use the inaccessible lavatory on the aircraft.

Advance Notice for POC or Carrier-Supplied Inflight Medical Oxygen

With respect to onboard use of supplemental oxygen during a flight, you can require advance notice of a passenger whether you, the carrier, provides the oxygen or the passenger supplies the POC.

International flights. You may require up to 72 hours' advance notice and 1-hour advance check-in (that is, 1 hour before the check-in time for the general public) from a passenger with a disability who wishes to receive carrier-supplied medical oxygen for use onboard the aircraft. You may require 48 hours' advance notice and check-in one hour before the check-in time for the general public to use his/her ventilator, respirator, CPAP machine or POC.

Domestic flights. You may require up to 48 hours' advance notice and 1-hour advance check-in (that is, 1 hour before the check-in time for the general public) from a passenger with a disability who wishes to use his or her own POC or wishes to receive carrier-supplied medical oxygen for use onboard the aircraft. (§ 382.27(b)).

Advance Notice for Other Electronic Respiratory Assistive Devices

With respect to onboard use of a ventilator, respirator, or continuous positive airway pressure (CPAP) machine during a flight, you may require up to 48 hours' advance notice and 1-hour advance check-in (that is, 1 hour before the check-in time for the general public) from a passenger with a disability when the passenger supplies the ventilator, respirator, or CPAP machine. (§ 382.27(b)).

Advance Notice for Optional Services and Equipment

Although carriers are not required to provide the following services or equipment, if you choose to provide them, you may require up to 48 hours' advance notice (that is, up to 48 hours before the scheduled departure time of the flight) and 1 hour's advance check-in (that is, 1 hour before the check-in time for the general public) for—

• Carriage of an incubator;

• Hook-up for a CPAP machine, POC, respirator, or ventilator to the aircraft's electrical power supply; and

• Accommodation for a passenger who must travel on a stretcher. (§ 382.27(c)(1)–(3)).

If a passenger with a disability provides the appropriate advance notice for a service you are required to provide or choose to provide, you must provide that the service or accommodation. (§ 382.27(d)).

Note: Since the issuance of the revised Part 382 on May 13, 2008, some carriers have denied passengers the use of POCs onboard the aircraft because the devices did not have a manufacturer's label indicating that the device complies with the standards of RTCA/DO–160 or other applicable Federal Aviation Administration (FAA) or foreign requirements for portable medical electronic devices, even though the POC has been approved by the FAA for onboard use. As stated in its Notice published on October 29, 2009, the Department of Transportation (DOT) strongly encourages carriers to allow passengers to use any FAA-approved POC if the conditions in Special Federal Aviation Regulation No. 106 (SFAR 106) for use of portable oxygen concentrator systems onboard aircraft are followed even if the device has not been labeled [8]. Under SFAR 106, the FAA reviews the tests of POCs and determines whether the POCs meet safety requirements for medical portable electronic devices and are safe for use in-flight subject to certain conditions. The FAA specifically lists any POC brands and models that it deems acceptable for use onboard aircraft in SFAR 106. (14 CFR part 121, SFAR 106) (A list of FAA-approved POCs can be found on the FAA's Web site at *http://www.faa.gov/about/initiatives/cabin_safety/portable_oxygen/*).

Make a Reasonable Effort To Accommodate, Even Without Advance Notice

If a passenger with a disability does *not* meet the advance notice or check-in requirement described above, you must make a reasonable effort to furnish the requested service or equipment, if making such accommodation would not delay the flight. (§ 382.27(g)).

Example 1: Mr. Thomas uses a battery-powered wheelchair. He travels frequently between Washington, DC, and New York for business. One day, he finds out that he has an important business meeting in New York and must travel to New York that afternoon. He has no time to provide advance notice regarding the transportation of his battery-powered wheelchair and arrives at the gate 45 minutes before his flight is scheduled to depart. The aircraft for the flight has fewer than 60 passenger seats. What should you do?

As a carrier, you may require 48 hours' advance notice and 1-hour advance check-in for transportation of a battery-powered wheelchair on a flight scheduled to be made on an aircraft with fewer than 60 passenger seats. You may require the same advance notice to provide hazardous materials packaging for a battery. However, carrier personnel are required to make reasonable efforts to accommodate a passenger who fails to provide the requisite notice to the extent it would not delay the flight. Therefore, you must make a reasonable effort to accommodate Mr. Thomas.

Mr. Thomas is a frequent traveler on this particular route and he knows that usually it is feasible to load, store, secure, and unload his battery-powered wheelchair and spillable battery in an upright position (§ 382.127(c)) or detach, ''box'', and store the spillable battery (§ 382.127(d)) within about 20 to 25 minutes. If this is possible under the existing circumstances, you must accommodate Mr. Thomas, his battery-powered wheelchair, and the spillable battery even though Mr. Thomas did not provide advance notice, because doing so would not delay the flight.

Example 2: Ms. Webster must travel with medical oxygen and arrives at the airport without providing advance notice of her need for medical oxygen. As a policy, your carrier does not provide medical oxygen on any flights. What should you do?

To begin, you should confirm that your carrier does not provide the optional service

[8] The Use of Passenger-Supplied Electronic Respiratory Assistive Device on Aircraft, October 28, 2009. See *http://airconsumer.dot.gov/rules/notice_10_28_09.pdf.* The notice also covers other electronic respiratory assistive devices.

of medical oxygen for use onboard a flight. If no medical oxygen service is available on your carrier, you should explain this to Ms. Webster and tell her that the carrier cannot accommodate her.

As a matter of customer service, you may direct Ms. Webster to another carrier that provides medical oxygen service in that market. The passenger should be aware, however, that providing medical oxygen involves coordination with the passenger's physician to determine the flow rate and the amount of oxygen needed and arranging for the delivery of the oxygen by the carrier to the point of origin of the passenger's trip. Therefore, normally, it is not possible to accommodate a passenger who needs medical oxygen on a flight unless the advance notice is provided because the accommodation cannot be made without delaying the flight. If the customer cannot be accommodated, you should provide the customer with a written statement stating the specific basis for the refusal to provide transportation within 10 calendar days of the refusal in accordance with section 382.19(d).

If the Aircraft Is Substituted or Changed to Another Carrier, Make an Effort To Accommodate

Even if a passenger with a disability provides advance notice, sometimes weather or mechanical problems require cancellation of the flight or the substitution of another aircraft. Under these circumstances, you must, to the maximum extent feasible, assist in providing the accommodation originally requested by the passenger with a disability even if the new flight is on another carrier. (§ 382.27(f)).

B. Information About the Aircraft

You should be able to provide information about aircraft accessibility to passengers with a disability when they or persons on their behalf request this information. When feasible, you should provide information pertaining to a specific aircraft to be used for a specific flight. In general, you must take into account safety and feasibility when seating passengers with disabilities. (§ 382.41 and Subpart F—Seating Accommodations).

If Requested, You Should Be Able To Provide Information on the Following

- Any limitations concerning the ability of the aircraft to accommodate an individual with a disability. This includes limitations on the availability of level-entry boarding to the aircraft at any airport involved in the flight;
- The location of seats in a row with a movable aisle armrest, if any, by row and seat number and any seats which the carrier may not make available to individuals with a disability (for example, exit rows);
- Any limitation on the availability of storage facilities in the cabin or in the cargo compartment for mobility aids or other assistive devices commonly used by an individual with a disability, including storage in the cabin of a passenger's wheelchair;
- Whether the aircraft has a lavatory accessible to passengers with a disability; and
- The type of services available and unavailable to passengers with a disability. (§ 382.41).

You Are Required To Provide the Following Information

For a passenger with a disability who communicates that he or she uses a wheelchair for boarding, you must provide information on any aircraft-related, service-related, or other accommodation limitation such as a limitation on the availability of level-entry boarding to the aircraft at any airport involved in the flight. The passenger does not have to request this information explicitly. (§ 382.41(c)).

Accuracy of Information

When an agent acting on your behalf provides inaccurate information to a passenger with a disability concerning a disability-related accommodation, you, the carrier, are responsible for any resulting information-related violation of Part 382.

In addition, if you agree to provide a service not specifically required under Part 382 to accommodate a particular passenger's disability, you are obligated to provide that service or risk being in violation of § 382.41. For example, if you inform a passenger that you will not serve peanuts on the passenger's flights to accommodate his or her peanut allergy then you must ensure peanuts are not served on those flights or be in violation of § 382.41.

Passenger-Supplied Electronic Respiratory Assistive Devices

U.S. carriers (except for on-demand air taxi operators).

You must permit passengers with a disability travelling on aircraft originally designed to have a maximum passenger seating capacity of more than 19 seats to use a continuous positive airway pressure (CPAP) machine, respirator, ventilator, or an FAA-approved POC in the aircraft cabin if the device—

(1) Meets FAA or applicable foreign government requirements and displays a manufacturer's label indicating that the device meets those requirements; and

(2) Can be stowed and used in the aircraft cabin under applicable FAA, PHMSA, and Transportation Security Administration (TSA) regulations. (§ 382.133(a)).

When during the reservation process a passenger with a disability asks you about bringing his or her electronic respiratory assistive device onboard the aircraft, you must tell the passenger about the requirements for carrying the device onboard the aircraft specifically—

(1) Labeling (see Note on labeling in Section A),

(2) Maximum weight and dimension limitations,

(3) Bringing an adequate number of fully charged batteries (packaged and protected from short circuit and physical damage),

(4) Any advance notice and check-in requirements (See Section A),

(5) Medical certificate requirements (POCs), and

(6) The maximum expected duration of the flight. (§ 382.133(c)(1) through (c)(6) and (f)(1)).

You may insist that passengers bring an adequate number of fully charged batteries onboard to power the device for not less than 150 percent of the expected maximum flight duration. (§ 382.133(f)(2)). If the passenger does not comply with the conditions for acceptance of a medical portable electronic device outlined in the regulation, you may deny the passenger boarding. (§ 382.133(f)(3)) If you deny the passenger boarding, you must provide the passenger with a written explanation within 10 calendar days of the refusal of transport as required under § 382.19(d).

Foreign Carriers (Except for Foreign Carriers Conducting Operations Equivalent to U.S. On-Demand Air Taxi Operators)

You must permit passengers with a disability traveling on aircraft originally designed to have a maximum passenger seating capacity of more than 19 seats to use a CPAP machine, respirator, ventilator, or a POC of a kind equivalent to an FAA-approved POC for U.S. carriers in the aircraft cabin during flights to, from, or within the United States if the device—

(1) Meets requirements for medical portable electronic devices set by the foreign carrier's government and displays a manufacturer's label indicating that the device meets those requirements or, if there is no applicable foreign government provision, the device meets requirements for medical portable electronic devices set by the FAA for U.S. carriers and displays a manufacturer's label that the device meets FAA requirements and

(2) Can be stowed and used in the aircraft cabin under applicable FAA, PHMSA, and TSA regulations, *and* the

safety or security regulations of the foreign carrier's government. (§ 382.133(b)).

When during the reservation process a passenger with a disability asks you about bringing his or her CPAP machine, respirator, ventilator, or a POC of a kind equivalent to an FAA-approved POC for U.S. carriers onboard the aircraft, you must tell the passenger about the foreign carrier's government requirements or FAA requirements, if applicable, for carrying the device onboard the aircraft specifically—

(1) Labeling (see Note on labeling in Section A),

(2) Maximum weight and dimension limitations,

(3) Bringing an adequate number of fully charged batteries (packaged in accordance with applicable government safety regulations),

(4) Any advance notice and check-in requirements (See Section A),

(5) Medical certificate requirements (POCs), and

(6) The maximum expected duration of the flight. (§ 382.133(d)(1) through (d)(7) and (f)(1)).

You may insist that passengers bring an adequate number of fully charged batteries onboard to power the device for not less than 150 percent of the expected maximum flight duration. (§ 382.133(f)(2)). If the passenger does not comply with the conditions for acceptance of a medical portable electronic device outlined in the regulation, you may deny the passenger boarding. (§ 382.133(f)(3)). If you deny the passenger boarding, you must provide the passenger with a written explanation within 10 calendar days of the refusal of transport as required under § 382.19(d).

Medical Certificate Requirements

While you may require a medical certificate from an individual who wishes to use a POC or carrier supplied oxygen during flight, it normally would not be appropriate for you to ask for such a certificate from someone wishing to use a CPAP machine, respirator, or ventilator aboard a flight. Consistent with § 382.23, a medical certificate should be required of an individual who uses a CPAP machine, respirator, or ventilator only if the individual's medical condition is such that there is reasonable doubt that the individual can complete the flight safely, without requiring extraordinary medical assistance during the flight. See Section G., Medical Certificates.

Batteries

The appropriate number of batteries should be calculated using the manufacturer's estimate of the hours of battery life while the device is in use and as specified in the passenger's medical certificate (for example, flow rate for POCs). The expected maximum flight duration is defined as the carrier's best estimate of the total duration of the flight from departure gate to arrival gate, including taxi time to and from the terminals, based on the scheduled flight time and factors such as wind and other weather conditions forecast; anticipated air traffic delays; one instrument approach and possible missed approach at the destination airport; and any other conditions that may delay arrival of the aircraft at the destination. (§§ 382.3 and 382.133(f)).

You may deny boarding, on the basis of safety, to a passenger with a disability who does not carry the number of fully charged batteries prescribed in the rule or to a passenger with a disability who does not properly package the extra batteries needed to power his/her device. Information for passengers on how to travel safely with batteries is available at *http://safetravel.dot.gov*. However, you may not deny boarding due to an inadequate number of batteries unless you can provide information from a reliable source demonstrating that the number of batteries that the passenger has supplied will not provide adequate power for 150 percent of the expected maximum flight duration based on the battery life indicated in the manufacturer's specification when the device is operating at the flow rate specified in the medical certificate. In instances where you deny boarding to an individual, you must provide the individual a written statement of the reason for the refusal to provide transportation within 10 days of the incident. (§ 382.133(f)(3)).

Note: The requirement to bring an adequate number of batteries to operate the device continuously for up to 150 percent of the expected maximum flight duration does not apply in circumstances where the passenger will be using an FAA-approved POC while boarding or deplaning from the aircraft but will be using a carrier-supplied POC or carrier-supplied oxygen during the flight itself.

Codeshare Flights

As the carrier whose code is used on a flight itinerary, you must either inform the passenger with a disability who inquires about using an electronic respiratory device (CPAP, POC, respirator, or ventilator) onboard the aircraft to—

(1) Contact the carrier operating the flight for information about its requirements for use of electronic respiratory devices onboard the aircraft or

(2) Provide information on the use of electronic respiratory devices on behalf of the codeshare carrier operating the flight. (§ 382.133(e)).

Example: A passenger buys a codeshare ticket from carrier A for a connecting itinerary from New York to Cairo through London, where carrier A operates the New York to London flight segment and carrier B operates the London to Cairo flight segment under carrier A's designator code. Carrier A must upon inquiry from the passenger inform the passenger about—

(1) Carrier A's requirements for the use in the cabin of a CPAP machine, POC, respirator, or ventilator and

(2) Carrier B's requirements for the use in the cabin of a CPAP machine, POC, respirator, or ventilator, or tell the passenger to contact carrier B directly to obtain this information.

C. Mobility Aids and Assistive Devices

If, in assisting a passenger with a disability, a carrier employee or contractor disassembles the passenger's wheelchair, mobility aid, or other assistive device, another carrier employee or contractor must reassemble it and ensure its prompt return to the passenger with a disability in the same condition in which the carrier received it. (§ 382.129(b)). You must permit passengers with a disability to provide written instructions concerning the disassembly and reassembly of their wheelchairs, other mobility aids, and other assistive devices. You must carry out these instructions to the greatest extent feasible consistent with FAA, PHMSA, TSA, or foreign government requirements concerning safety, hazardous materials, and security with respect to the stowage of carry-on items. (§ 382.129(a)). You cannot require passengers with disabilities to sign a waiver of liability for damage to or loss of wheelchairs or other assistive devices. However, you may note preexisting damage to wheelchairs or other assistive devices. (§ 382.35(b)).

D. Service Animals [9]

A service animal is an—

(1) Animal individually trained to perform functions to assist a person with a disability;

(2) Animal that has been shown to have the innate ability to assist a person

[9] Guidance Concerning Service Animals at *http://airconsumer.ost.dot.gov/rules/20030509.pdf*. This document describes how the DOT understands § 382.117 and provides suggestions and recommendations on how carriers can best accommodate service animals and their users.

with a disability, for example, a seizure alert animal; or

(3) Emotional support or psychiatric service animal.

You should be aware that there are many different types of service animals that perform a range of tasks for individuals with a disability. However, as a foreign carrier you are only required to accommodate dogs as service animals except on codesharing flights with U.S. carriers. For more information regarding service animals on such flights, see the Note under the heading *Unusual Service Animals* in this section.

Service Animal Permitted To Accompany Passenger on Flight and at Seat Assignment

You must permit a service animal used by a passenger with a disability to accompany the passenger on his or her flight. (§ 382.117(a)). In addition, you must permit a service animal to accompany a passenger with a disability to the passenger's assigned seat and remain there if the animal does not obstruct the aisle or other areas that must remain unobstructed to facilitate an emergency evacuation. (§ 382.117(b)). The service animal must be allowed to accompany the passenger unless it poses a direct threat to the health or safety of others or presents a significant threat of disruption to the cabin service.

If a service animal does not fit in the space immediately in front of the accompanying passenger with a disability and there is no other seat with sufficient space to safely accommodate the animal and the accompanying passenger, there are several options to consider for accommodating the service animal in the cabin in the same class of service. You should speak with other passengers to find a passenger—

(1) Seated in an adjacent seat who is willing to share foot space with the animal, or

(2) Who is willing to exchange seats with the passenger accompanying the service animal and is seated in a seat adjacent to—

(a) A location where the service animal can be accommodated (for example, in the space behind the last row of seats) or

(b) An empty seat.

You must not deny a passenger with a disability transportation on the basis that the service animal may offend or annoy persons traveling on the aircraft. (§ 382.117(a)(1)). See also Guidance Concerning Service Animals at *http://airconsumer.ost.dot.gov/rules/20030509.pdf*. The FAA issued a Flight Standards Information Bulletin for Air Transportation (FSAT) that deals with the ''Location and Placement of Service Animals on Aircraft Engaged in Public Air Transportation.'' That FSAT can be found in Appendix IV.

If Service Animal Cannot Be Accommodated at Assigned Seat

If a service animal cannot be accommodated at the seat of the passenger with a disability and if there is another seat in the same class of service where the passenger and the animal can be accommodated, you must offer the passenger the opportunity to move to the other seat with the service animal. (§ 382.117(c)).

Verification of Service Animals

Under particular circumstances (see Example 1 below), you may wish to verify whether an animal accompanying a passenger with a disability qualifies as a service animal under Part 382. Other than service animals used as emotional support or psychiatric service animals, you must accept the following as evidence that the animal is a service animal:

- The credible verbal assurances of a qualified individual with a disability using the animal,
- The presence of harnesses,
- Tags, or
- Identification cards or other written documentation. (§ 382.117(d)).

Note: Passengers accompanied by service animals may not have identification or written documentation regarding their service animals. Some service animals wear harnesses, vests, capes, or backpacks. Markings on these items or on the animal's tags may identify it as a service animal, however, the absence of such equipment does not necessarily mean the animal is not a service animal. Similarly, the presence of a harness or vest on a pet for which the passenger cannot provide a credible verbal assurance may not be sufficient evidence that the animal is a legitimate service animal. See also Appendix III of this manual titled DOT Guidance Concerning Service Animals in Air Transportation.

Required Documentation

If a flight is scheduled for 8 hours or more, you may require documentation that the service animal will not need to relieve itself on the flight or can do so in a way that will not create a health or sanitation issue on the flight. (§ 382.117(a)(2)).

Carriers also may require that passengers traveling with emotional support or psychiatric service animals present current documentation (that is, no older than 1 year from the date of the passenger's scheduled initial flight)[10] on the letterhead of a licensed mental health professional, including a medical doctor, specifically treating the passenger's mental or emotional disability stating—

- The passenger has a recognized mental or emotional disability;[11]
- The passenger needs the service animal as an accommodation for air travel and/or activity at the passenger's destination;
- The provider of the letter is a licensed mental health professional, or a licensed medical professional treating the individual for the recognized mental or emotional disability, and the passenger is under the individual's professional care; and
- The date and type of mental health professional's license and the state or other jurisdiction in which the license was issued. (§ 382.117(e)(1) through (e)(4)).

Even if you receive sufficient verification that an animal accompanying a passenger is a service animal, if the service animal's behavior in a public setting is inappropriate or disruptive to other passengers or carrier personnel, you may refuse to permit the animal on the flight and offer the passenger alternative accommodations in accordance with Part 382 and your carrier's policy (for example, carry the animal in the cargo compartment). Note that carriers are required to carry service animals even if the animal may offend or annoy carrier personnel or persons traveling on the aircraft. Pursuant to section 382.117(g), if you refuse to accept an animal as a service animal, you must explain the reason for your decision to the passenger and document it in writing. A copy of the explanation must be provided to the passenger within 10 calendar days of the incident.

Example 1: A passenger arrives at the gate accompanied by a pot-bellied pig. She claims that the pot-bellied pig is her service animal. What should you do?

Generally, you must permit a passenger with a disability to be accompanied by a service animal. However if you have a reasonable basis for questioning whether the animal is a service animal, you may ask for some verification. Usually written verification is not required.

You may begin by asking questions about the service animal, for example, ''What tasks or functions does your animal perform for

[10] Your carrier may, at its discretion, accept from the passenger with a disability documentation from his or her licensed mental health professional that is more than 1 year old. The DOT encourages carriers to consider accepting ''outdated'' documentation in situations where such passenger provides a letter or notice of cancellation or other written communication indicating the termination of health insurance coverage, and his/her inability to afford treatment for his or her mental or emotional disability.

[11] Referenced in the Diagnostic and Statistical Manual of Mental Disorders—Fourth Edition (DSM IV).

you?'' or ''What has its training been?'' If you are not satisfied with the credibility of the answers to these questions or if the service animal is an emotional support or psychiatric service animal, you may request further verification. You should also call a CRO if there is any further doubt as to whether the pot-bellied pig is the passenger's service animal.

Finally, if you determine that the pot-bellied pig is a service animal, you must permit the service animal to accompany the passenger to her seat provided the animal does not obstruct the aisle or present any safety issues and the animal is behaving appropriately in a public setting. However, note that as a foreign carrier, you are not required to carry service animals other than dogs (except as noted in § 382.7(c) for codeshare flights with a U.S carrier.).

Example 2: A passenger with a hearing impairment is planning to board the plane with his service animal. The service animal is a hearing-assistance dog and is small enough to sit on the passenger's lap. While waiting to board the flight, the hearing-assistance dog jumps off the passenger's lap and begins barking and nipping at other passengers in the waiting area. What should you do?

Although you have initially made the determination that the hearing-assistance dog is a service animal and may accompany the passenger with the hearing impairment on the flight, you may reconsider the decision if the dog is behaving in a manner that seems disruptive and infringes on the safety of other passengers. You should carefully observe the hearing-assistance dog's behavior and explain it in detail to a CRO (if the CRO is on the telephone). If, after careful consideration of all the facts presented, the CRO decides not to treat the dog as a service animal, you should explain your carrier's policy regarding traveling with animals that are not being allowed in the passenger cabin as service animals. As discussed later, you also must document your decision in writing and provide the passenger with a copy of your explanation at the airport or within 10 calendar days. (§ 382.117(g)).

Requests for Seat Assignments by a Passenger Accompanied by a Service Animal

For a passenger with a disability traveling with a service animal, you must provide, as the passenger requests, either a bulkhead seat or a seat other than a bulkhead seat. (§ 382.81(c)). Note that on some aircraft the bulkhead seat is also the emergency exit row. If this is the case, the passenger cannot sit in the bulkhead seat with the service animal.

Relief Areas for Service Animals

With respect to terminal facilities you own, lease, or control at a U.S. airport, you must, in cooperation with the airport operator, provide relief areas for service animals that accompany passengers with a disability who are departing, arriving, or connecting at an airport on your flights.

When establishing relief areas you should consider the size and surface material of the area, maintenance, and distance to relief area, which could vary, based on the size and configuration of the airport. In planning the relief area, it is critical to involve airline, airport, service animal training organization, TSA, and U.S. Customs and Border Protection.

In addition, you should advise passengers who request you provide them with assistance to an animal relief area, the location of the animal relief area. Additionally, if requested, it would be your responsibility to accompany a passenger traveling with a service animal to and from the animal relief area.

The DOT requirement to provide animal relief areas was effective on May 13, 2009, for U.S. carriers and May 13, 2010, for foreign carriers. See Chapter 4, Section A, Animal Relief Areas, for additional guidance on establishing and maintaining relief areas for service animals. (§ 382.51(a)(5)).

Unusual Service Animals

As a U.S. carrier, you are not required to carry certain unusual service animals in the aircraft cabin such as ferrets, rodents, spiders, snakes and other reptiles. Other commonly used service animals, such as miniature horses and monkeys, can travel as service animals on U.S. carriers. However, the carrier can decide to exclude a particular animal on a case-by-case basis if it—

- Is too large or heavy to be accommodated in the aircraft cabin;
- Would pose a direct threat to the health and safety of others;
- Would cause a significant disruption in cabin service; or
- Would be prohibited from entering a foreign country at the aircraft's destination.

For U.S. carriers, if none of the factors listed directly above preclude a service animal from traveling in the aircraft cabin, you must permit it to travel onboard the aircraft.

Note: As a foreign carrier, you are normally only required to accommodate dogs as service animals. However, if you are a foreign carrier that participates in a codesharing arrangement with a U.S. carrier on flights between two foreign points, the service provisions of Subparts A through C, F through H, and K with respect to passengers traveling under the U.S. carriers code would be in effect on the codeshare flight. Therefore, in such instances as a foreign carrier you would have to accommodate service animals other than dogs.

Exceptions to Requirement for Foreign Carriers To Accommodate Unusual Service Animals

A U.S. carrier advises the passenger that the foreign carrier does not accept service animals other than dogs and then assists the passenger in making alternate flight arrangements using alternate carriers and/or alternate routings.

Alternatively, the U.S. carrier could market and sell the flight segment between two foreign points as an interline connection [12] as opposed to a code-share flight, and fully disclose to the passenger that the foreign carrier will likely not provide the same service that is to accept service animals other than dogs as is required of a U.S. carrier.

Nonacceptance of a Service Animal

If you decide not to accept an animal as a service animal, you must explain the reason to the passenger and document your decision in writing. A copy of the explanation must be provided to the passenger at the airport or within 10 calendar days of the event. (§ 382.117(g)).

Destinations Outside the United States

You must promptly take all steps necessary to comply with foreign regulations such as animal health regulations, to permit the transportation of a passenger's service animal from the United States to a foreign destination. (§ 382.117(h)). See Appendix IV for DOT Guidance on transportation of service animals into the United Kingdom and into countries other than the United Kingdom. (§ 382.117(i)). This guidance also can be found on the DOT's Aviation Consumer Protection Division Web site at *http://airconsumer.dot.gov*.

E. Accommodations for Air Travelers With Hearing Impairments

If, as a carrier, you provide a telephone reservation and information service to the public, you must make this service available to individuals who use a text telephone (TTY), whether through your own TTY, voice relay, or other available technology to permit individuals with hearing impairments to make reservations and obtain information. You no longer are required to have a TTY; only your reservation service must be available to those who use a TTY. The TTY, voice relay, or other available technology must be available during the same hours as the telephone service for the general public and the same response time for answering calls and the same surcharges

[12] Interline connection means change of aircraft and airlines.

must apply to the TTY, voice relay, or other available technology as the telephone service for the general public (non-TTY users). You must also list your TTY number if you have one when in any medium in which you list the telephone number of your information and reservation service. If you do not have a TTY number, you must state how TTY users can reach your information and reservation service such as via voice relay or other technology. (§ 382.43(a)(1) through (4)).

Foreign Carriers

As a foreign carrier, information and reservation services must be accessible to individuals with hearing impairments for flights covered by this rule by May 13, 2010. (§ 382.43(a)(5)).

Exceptions to TTY Requirements

You do not have to meet the TTY, voice relay, or other available technology requirements in any country in which the telecommunications infrastructure does not readily permit compliance. (§ 382.43(b)).

F. Communicable Diseases

Passengers With a Communicable Disease or Other Medical Condition Are Permitted on a Flight

Except as described below in this section, you must not— (1) Refuse transportation to; (2) require a medical certificate from; (3) delay the passenger's transportation (for example, require the passenger to take a later flight); or (4) impose any condition, restriction, or requirement not imposed on other passengers on a passenger with a communicable disease or infection. (§ 382.21)

If Direct Threat to Health or Safety of Others, Limitations May Be Imposed

Only if a passenger with a communicable disease or infection poses a *direct threat* to the health or safety of others, can you take any of the actions listed below. (§ 382.21(a)). A *direct threat* means a significant risk to the health or safety of others that cannot be eliminated by modifying policies, practices, or procedures, or by providing auxiliary aids or services. (§ 382.3) .

To be a direct threat—

A condition must be (1) readily transmittable by casual contact during a flight; *and* (2) have severe health consequences.

Direct Threat Determination

If you are faced with particular circumstances where you are required to make a determination as to whether a passenger with a communicable disease or infection poses a direct threat to the health or safety of others, you must make an individualized assessment based on a reasonable judgment, relying on current medical knowledge or the best available objective evidence, to determine—

(1) The nature, duration, and severity of the risk;

(2) The probability that the potential harm to the health and safety of others will actually occur; and

(3) Whether reasonably modifying policies, practices, or procedures will mitigate the risk. (§§ 382.19(c)(1)(i–iii) and 382.21(b)(1)(2)).

In making this assessment, you may rely on directives issued by public health authorities such as the U.S. Centers for Disease Control or Public Health Service, comparable agencies in other countries, and the World Health Organization. You must consider the significance of the consequences of a communicable disease and the degree to which it can be readily transmitted by casual contact in an aircraft cabin. (§ 382.21(b)(1)).

You should also confer with appropriate medical personnel and a CRO when making this assessment. The following table presents examples of communicable diseases and the degree to which they can be readily transmitted in an aircraft cabin, whether they involve severe health consequences and whether they pose a ''direct threat'' to other passengers:

Communicable disease	Readily transmissible in the aircraft cabin	Severe health consequences	Direct threat
Common Cold	Yes	No	No.
AIDS	No	Yes	No.
SARS	Yes	Yes	Yes.

(§ 382.21(b)(2)).

If the Passenger Poses a Direct Threat to the Health and Safety of Others

If, in your estimation, a passenger with a communicable disease or infection poses a direct threat to the health or safety of other passengers, you may—

(1) Impose on that passenger a special condition or restriction (for example, wearing a mask);

(2) Require that person to provide a medical certificate stating that the disease at its current stage would not be transmittable during the normal course of a flight or, if applicable, describing measures that would prevent transmission during the flight (§ 382.21(c));

(3) Delay the passenger's transportation (for example, require the passenger to take a later flight); or

(4) Refuse to provide transportation to that person.

You must choose the least restrictive of the four options described above that would accomplish the objective. (§ 382.19(c)(2)).

Medical Certificate Requirements—Direct Threat Determined

See Section G, Medical Certificates, Medical Certificate and a Passenger with a Communicable Disease or Infection.

Postponed Travel

If you deem a passenger as presenting a direct threat and determine he or she cannot travel as scheduled, you must allow the passenger to travel at a time *up to 90 days from the date of the postponed travel* at the same price or, at the passenger's discretion, provide a refund for any unused flights, including return flights. You may not apply cancellation or rebooking fees or penalties to this situation or subject the passenger to any fare increases that may occur in the meantime. In addition, you may not apply cancellation or rebooking fees or penalties to any increase in that passenger's fare because a seat was unavailable in the fare class on his or her original ticket. (§ 382.21(d)). If you restrict a passenger's travel on the basis that the passenger has a communicable disease or other medical condition, you must, on the passenger's request, provide a written explanation within 10 days of the passenger's request. (§ 382.21(e)).

Example: A passenger purchases a one-way economy/coach class ticket for a flight from Los Angeles to Tokyo on March 15 for $750. When the passenger arrives at the airport it is determined he has contracted Severe Acute Respiratory Syndrome (SARS). The carrier determines that because SARS is both able to be readily transmitted by casual contact during a flight and has severe health consequences the passenger presents a direct threat. Accordingly, the carrier forces the passenger to postpone his travel. On April 15, the passenger is completely healthy and

free of SARS and wishes to rebook a ticket from Los Angeles to Tokyo. Even though the current price of an economy/coach class ticket from Los Angeles to Tokyo is $900 on April 15, the carrier may not charge this passenger more than $750 for the economy/coach class ticket. Additionally, if there are no economy/coach class seats available when the passenger wants to travel and the passenger chooses to purchase a business or first class ticket to be on that particular flight, the carrier may not apply cancellation or rebooking fees or penalties to any increase in that passenger's fare because no seats were available for purchase at the economy/coach class fare. However, you may charge the passenger the difference between the price of the $750 economy/coach class ticket and the price of a business class seat or a first class seat.

At all times, as a matter of good customer service, you should treat the passenger with courtesy and respect.

G. Medical Certificates

Medical Certificates for Passengers With a Disability (Other Than Passengers With a Communicable Disease)

A medical certificate is a written statement from the passenger's physician saying that the passenger is capable of completing the flight safely without requiring extraordinary medical assistance during the flight. Except under the circumstances described below, you must not require medical certification of a passenger with a disability as a condition for providing transportation. (§ 382.23(a) and (b)(2)).

You may require a medical certificate only if the passenger with a disability:

- Is traveling on a stretcher or in an incubator (where such service is offered);
- Will be using a passenger-supplied POC in-flight or needs carrier-supplied medical oxygen (where such service is offered);
- Has a medical condition that causes the carrier to have reasonable doubt that the passenger can complete the flight safely without requiring extraordinary medical assistance during the flight. (§ 382.23(b)); or
- Has a communicable disease that poses a direct threat to the health and safety of others on the flight. (§ 382.23(c)).

To be valid, the required medical certificate must be dated within 10 days of the scheduled date of the passenger's initial departing flight. (§ 382.23(b)(3)).

Note: The DOT's intent regarding the medical certificate provision was to allow carriers to impose the 10-day time limit to medical certificates only for passengers with communicable diseases, not to other individuals such as passengers who need supplemental oxygen (for example, to assist those individuals with asthma or emphysema.) The DOT encourages carriers not to require the documentation to be dated within 10 days of the scheduled date of the passenger's flight for passengers who wish to use an FAA-approved POC as supplemental oxygen.

Example: A passenger schedules a flight from New York to London on January 15 with a return flight on April 15 and would like to use a POC onboard the aircraft. The carrier could require the passenger to show a medical certificate dated January 5 or later. For the passenger's return flight on April 15, the passenger would not have to show a second medical certificate dated April 5 or later.

Significant Adverse Change in Medical Condition

You may subject a passenger with a medical certificate to additional medical review if you believe that—

(1) There has been a significant adverse change in the passenger's medical condition since the issuance of the medical certificate or

(2) The certificate significantly understates the passenger's risk to the health or safety of others on the flight.

If this additional medical review shows that the passenger is unlikely to complete the flight without extraordinary medical assistance you may, notwithstanding the medical certificate, deny or restrict the passenger's transportation. (§ 382.23(d)).

Note: If you deny or restrict a passenger's travel, you must provide a written explanation upon the passenger's request within 10 days of the request explaining why you considered the restriction necessary. (§ 382.21(e)).

Medical Certificate and a Passenger With a Communicable Disease or Infection

If you determine that a passenger with a communicable disease or infection poses a direct threat to the health or safety of others on the flight, you may require a medical certificate from the passenger. (§ 382.23(c)(1)) The medical certificate is a written statement from the passenger's physician stating that the disease or infection would not under current conditions be communicable to other persons during the normal course of the flight and must include any conditions or precautions that would have to be observed to prevent the transmission of the disease or infection during the normal course of the flight. The medical certificate must be dated within 10 days of the flight date, not within 10 days of the initial flight. (§ 382.23(c)(2)).

In the event that you determine the need for a medical certificate for a passenger with a communicable disease or infection, you should provide the passenger with the disability the reason for the request. You should base your request on the reasons provided in Part 382 and outlined above.

At all times, you should treat the passenger from whom you are requesting a medical certificate with courtesy and respect.

Example: A passenger arrives at the gate with her 6-year-old daughter. The girl's face and arms are covered with red lesions, resembling chicken pox. What should you do?

Generally, you must not refuse travel to, require a medical certificate from, or impose special conditions on a passenger with a communicable disease or infection. However, if a passenger appears to have a communicable disease or infection that poses a direct threat to the health or safety of other passengers, you may be required to make a determination about the best course of action based on the seriousness of the health risk and the ease of disease transmittal. As previously discussed, for a communicable disease or infection to pose a direct threat, the condition must both be readily transmitted under conditions of flight and have serious health consequences. An example of such a communicable disease is SARs. Medical conditions that do not pose a direct threat to the health or safety of passengers (1) are easily transmitted in aircraft cabins but have limited health consequences such as the common cold or (2) are difficult to transmit in aircraft cabins but have serious health consequences such as acquired immune deficiency syndrome (AIDS).

The first thing you should do is interview the passenger and her mother to obtain basic information about the girl's condition. This exchange should be done discreetly and in a courteous and respectful manner. If you still have a question about the nature of the child's condition that will affect decisions about transportation, you should contact a CRO and explain the situation.

Here, the mother tells you and the CRO that the child has chicken pox but is no longer contagious. The CRO would likely consult with appropriate medical personnel to verify whether the child could be contagious based on the mother's statement and the CRO's observations and confirm that contagious chicken pox would pose a direct threat to passengers.

If there is a reasonable basis for believing that the passenger poses a direct threat to the health or safety of others, you must choose the least restrictive alternative among the following options:

(1) Refusing transportation to the individual;

(2) Delaying the passenger's transportation (for example, requiring the individual to take a later flight);

(3) Requiring a medical certificate; or

(4) Imposing a special condition or limitation on the individual.

If the medical support people indicate there is a chance that the child is no longer contagious but only if a certain number of days have passed since the outbreak of the

lesions, you could request a medical certificate before you permit the child to travel.

Having discussed the situation with the passenger and her mother and consulted the CRO and the medical support personnel, the request for a medical certificate appears to be reasonable under the circumstances and the least restrictive of the four options.

As a reminder, § 382.23(c)(2) specifies that the medical certificate be from the child's physician and state that the child's chicken pox would not be communicable to other passengers during the normal course of a flight. The medical certificate must also include any conditions or precautions that would have to be observed to prevent the transmission of the chicken pox to other passengers during the normal course of a flight and be dated within 10 days of the date of the flight. If the medical certificate is incomplete, you cannot carry out the prescribed measures on the medical certificate. If you cannot carry out the prescribed measures on the medical certificate or if the passenger is attempting to travel before the date specified in the medical certificate or without implementing the conditions outlined to prevent transmission, the child would not be permitted to fly.

Note: If you restrict a passenger's travel, you must provide a written explanation upon the passenger's request within 10 days of the request explaining why you considered the restriction necessary. (§ 382.21(e)).

Significant Adverse Change in Medical Condition

You may subject a passenger with a medical certificate to additional medical review if you believe that—

(1) There has been a significant adverse change in the passenger's medical condition since the issuance of the medical certificate or

(2) The certificate significantly understates the passenger's risk to the health or safety of others on the flight.

If this additional medical review shows that the passenger is unlikely to complete the flight without extraordinary medical assistance or would pose a direct threat to other passengers, you may, notwithstanding the medical certificate, deny or restrict the passenger's transportation. (§ 382.23(d)).

H. Your Obligation To Provide Services and Equipment

Moving Through the Terminal Assistance

Terminal Entrance to Gate and Gate to Terminal Entrance

As a carrier, you must provide, or ensure the provision of, assistance to a passenger with a disability in moving from the terminal entrance through the airport to the gate for a departing flight or from the gate to the terminal entrance if the passenger or someone on behalf of the passenger requests such assistance or you offer and the passenger with a disability accepts the assistance. This obligation extends to a vehicle drop-off or pick-up point adjacent to the terminal entrance and key functional areas of the terminal such as ticket counters and baggage claim. This does not include satellite parking or car rental drop-off areas that are not adjacent to the terminal entrance.

Rest Room Stops

While providing assistance to a disabled passenger in going to, from and between gates, a carrier must, upon request, make a brief stop at the entrance to a rest room, including an accessible rest room when requested, if such a stop is available on the route and the stop can be made without unreasonable delay. (§ 382.91(b), (b)(1), and (b)(2)).

Luggage Assistance

As a carrier, you also must assist passengers who are unable to carry their luggage because of their disability with transporting their luggage for check-in at the ticket counter or gate, or as carry-on aboard the aircraft. This obligation exists only if the passenger requests such assistance and can make credible verbal assurances of his or her inability to carry the item because of his or her disability. If the passenger's verbal assurances are not credible, you may require the passenger to produce documentation as a condition of providing the service. (§ 382.91(d)).

Animal Relief Area Escort

At airports located in the United States, you must in cooperation with the airport operator, provide for escorting a passenger with a service animal to an animal relief area if the passenger requests. (§ 382.91(c)). See Section D above.

Connecting Assistance

The arriving carrier (the one that operates the first of the two flights that are connecting) is responsible for connecting assistance for passengers with a disability moving within the terminal. As an employee/contractor of the arriving carrier, on request, you must provide assistance to a passenger with a disability in making flight connections and providing transportation between gates. The arriving carrier may mutually agree with the carrier operating the departing connecting flight (the second flight of the two flights) that the departing carrier will provide the connecting assistance. However, the carrier operating the arriving flight *is ultimately responsible* for ensuring that connecting assistance is provided to the passenger with a disability. (§ 382.91(a)). This service must be provided regardless of whether the passenger has a single ticket showing a connection or has two separate tickets for the journey.

Boarding and Deplaning Assistance

If assistance with boarding or deplaning, making flight connections, or transportation between gates is requested by or on behalf of a passenger with a disability, or offered by carrier personnel and accepted by the passenger, you must provide it.

More specifically, you must promptly provide, when needed and to the extent required by law, the following:

- Services personnel,
- Ground wheelchairs,
- Accessible motorized carts,
- On-board wheelchairs,
- Boarding wheelchairs, and/or
- Ramps or mechanical lifts.

(§ 382.95(a)).

At U.S. commercial service airports with 10,000 or more annual enplanements, as a carrier, you must provide boarding assistance using lifts or ramps where level-entry boarding and deplaning or accessible passenger lounges are not otherwise available. (§ 382.95(b)). This requirement applies to aircraft with a passenger seating capacity of 19 or more, with limited exceptions (float planes; Fairchild Metro; Jetstream 31 and 32; Beech 1900C and 1900D; Embraer EMB–120; and any other aircraft model the DOT determines unsuitable for boarding assistance by lift, ramp, or other suitable device). (§ 382.97).

On-Board Wheelchair Requirements

Aircraft with more than 60 passenger seats having an accessible lavatory must be equipped with an operable on-board wheelchair. The Aerospatiale/Aeritalia ATR–72 and the British Aerospace Advanced Turboprop (ATP) that have seating configurations between 60 and 70 passenger seats are exempt from this requirement. (§ 382.65(a)).

On-board wheelchairs must be equipped with—

- Footrests,
- Armrests which are movable or removable,
- Adequate occupant restraint systems,
- A backrest height that permits assistance to passengers in transferring,
- Structurally sound handles for maneuvering the occupied chair, and
- Wheel locks or another adequate means to prevent chair movement during transfer or turbulence.

(§ 382.65(c)(1)).

The on-board wheelchair must be designed to be compatible with the maneuvering space, aisle width, and seat height of the aircraft on which it is to be used, and to easily be pushed, pulled, and turned in the cabin environment by carrier personnel. (§ 382.65(c)(2)).

If the aircraft being used for the flight has more than 60 passenger seats but does not have an accessible lavatory, you must provide an on-board wheelchair upon request for a passenger who can use the inaccessible lavatory but cannot reach it from his or her seat without the use of an on-board wheelchair. You may require the passenger to provide up to 48 hours' advance notice and check in 1 hour before the check-in time for the general public when requesting the on-board wheelchair under these circumstances. (§ 382.65(b)) and 382.27(c)(7)).

Compliance Dates for On-Board Wheelchairs

Foreign carriers were required to meet the requirements for an on-board wheelchair by May 13, 2010. U.S. carriers were required to meet these requirements by May 13, 2009.

Assembly and Disassembly of Passenger's Wheelchairs

You must permit a passenger with a disability to provide written instructions and should accept oral advice from the passenger concerning the disassembly and reassembly of the passenger's wheelchair. (§ 382.129(a)).

In addition, consistent with good customer service, you should treat the passenger with a disability with courtesy and respect at all times by keeping the passenger informed about any problems or delays in providing personnel or equipment in connection with an accommodation.

I. Safety Assistants

Except under limited circumstances, you cannot require a passenger with a disability to be accompanied by a safety assistant. (§ 382.29(a)). See Chapter 4, Section E, Safety Assistants, for a discussion of the Part 382 requirements for a safety assistant.

Chapter 4: Assisting Air Travelers With Disabilities at the Airport

A. Accessibility of Terminal Facilities and Services
B. Security Screening for Air Travelers With a Disability
C. Air Travelers With a Disability Moving Through the Terminal and Changing Airplanes
D. Accommodations for Air Travelers With Vision or Hearing Impairments
E. Safety Assistants

A. Accessibility of Terminal Facilities and Services

Airports Located in the United States

Accessibility

All terminal facilities owned, leased, or controlled by carriers at U.S. airports, must be readily accessible to and usable by individuals with disabilities, including individuals who use wheelchairs. (§ 382.51(a)(1)). For example, terminals must provide accessible intra- and inter-terminal transportation systems, such as moving sidewalks, shuttle vehicles, and people movers. (§ 382.51(a)(3)).

As a carrier, you must ensure that there is an accessible route (one meeting the requirements of the Americans with Disabilities Act Accessibility Guidelines (ADAAG)) between the gate and boarding area when an accessible passenger lounge or other level entry boarding and deplaning is not available to and from an aircraft. For example, there must be an accessible path on the tarmac between the gate and the aircraft when level-entry boarding is not available. (§ 382.51(a)(2)).

Animal Relief Areas

In cooperation with the airport operator and in consultation with local service animal training organizations, you must provide animal relief areas for service animals that accompany passengers departing, connecting, or arriving at an airport on your flights. (§ 382.51(a)(5)).

The national and international service animal organizations below have directories of training organizations on their Web sites that you and the airport operator can use to find the nearest service animal training organization. Such groups are often able to put airlines and airports in touch with sources of the necessary technical expertise on establishing relief areas.

- American Dog Trainers Network. Web site address: *http://www.inch.com/~dogs/service.html*.
- Assistance Dogs International. Web site address: *http://www.assistancedogsinternational.org/membersstatecountry.php*.

If the Department's Aviation Enforcement Office received a complaint alleging that an animal relief area was not available or not being properly maintained, the carrier involved would ultimately be responsible for ensuring these areas are available and maintained, with respect to terminal facilities the carrier owns, leases or controls. However, the actual establishment of the animal relief area, as well as its maintenance, could be handled contractually with the airport operator since several carriers could be using the same designated animal relief area.

Relief Area Location. Although not specifically required by Part 382, you and the airport operator may wish to consider the benefits of establishing animal relief areas both inside and outside the secure area (for example, to accommodate passengers with short connection times, to minimize time needed for escort service or passenger convenience). In establishing animal relief areas inside the secure area, you and the airport operator should coordinate closely with the Transportation Security Administration (TSA) and the Customs and Border Protection (CBP) offices serving the airport to ensure that the animal relief area can be used consistent with TSA and CBP procedures.

Establishing a Relief Area. Factors to consider in establishing relief areas include the size and surface material of the area, maintenance, and distance to the relief area, which could vary based on the size and configuration of the airport. The best solution based on these factors could vary from airport to airport and therefore involvement of all the stakeholder groups in the planning is critical (for example, airline, airport, service animal training organization, TSA, and CBP).

Considerations for designating and constructing areas safe for humans and animals include:

(1) Designate relief areas solely for that purpose. This helps keep the area free of hazards and distractions, and helps prevent the spread of waste contamination.

(2) Establish relief areas that are:

(a) Accessible to passengers with all types of disabilities;

(b) Of a size adequate for larger dogs to use;

(c) Minimal travel distance to and from the gate for passengers making connecting flights; and

(d) Equipped with adequate lighting to enhance usability and security.

(3) Keep the area clean (for example, free of broken glass, bottle caps, and trash). When feasible, the area should also be free of loud noises and strong odors.

(4) Use a gravel or sand surface for relief areas. Gravel can be disinfected adequately to reduce the chance of germs being spread between animals or carried outside of the relief area.

(5) Install adequate drainage to allow cleaning by regularly hosing down the relief area.

(6) Provide trash cans for waste disposal that are emptied frequently.

Note: There is a requirement for carriers to consult with service animal training organizations in establishing animal relief areas. Where there is no local service animal training organization, the Department of Transportation (DOT) would consider consultation with a national or international service animal training organization to satisfy the requirement.

You should advise passengers who request you provide them with assistance to an animal relief area of the location of the animal relief area. Additionally, if requested, it would be your responsibility to accompany a passenger traveling with a service animal to and from the animal relief area. The requirement to provide animal relief areas was effective on May 13, 2009, for U.S. carriers and May 13, 2010, for foreign carriers.

High-Contrast Captioning on Televisions and Other Audio-Visual Displays

You must enable captioning at all times on all televisions and other audio-visual displays that are capable of displaying captions and that are located in any portion of the terminal where passengers have access. The captioning must be high contrast if feasible. (§ 382.51(a)(6)).

You must replace any televisions and other audio-visual displays providing passengers with safety briefings, information, or entertainment that do not have high-contrast captioning capability with equipment that has such capability when you replace such equipment in the normal course of operations and/or whenever areas of the terminal in which such equipment is located are undergoing substantial renovation or expansion. (§ 382.51(a)(7)). If you newly acquire televisions and other audio-visual displays for passenger safety briefings (for example, safety briefings on the location of airport terminal emergency exists), information, or entertainment, on or after May 13, 2009, this equipment must have high-contrast captioning capability. (§ 382.51(a)(8)).

Compliance Dates

U.S. Carriers	You must meet the facility accessibility requirements described above at airports located in the United States on or after May 13, 2009, as specified in this section.
Foreign Carriers	You must meet the facility accessibility requirements described above at airports located in the United States by May 13, 2010.

(§ 382.51(c)).

Airports Located in a Foreign Country

The ADAAG requirements do not apply to foreign airports. However, Part 382 contains a performance requirement to ensure that passengers with a disability can readily use the facilities the carrier owns, leases, or controls at the airport. (§ 382.51(b)). As a foreign carrier, this requirement applies only at terminal facilities for flights covered by the rule.

Moving Through the Terminal

You must ensure that a passenger with a disability is able to move readily through the terminal facilities, to get to or from the gate and any other area from which passengers board your carrier's aircraft. This includes moving on the tarmac between the gate and the aircraft when an accessible passenger lounge is not available, and moving to and from an aircraft when level-entry boarding is not available. (§ 382.51(b)(1)). You may meet this obligation through any combination of accessible facilities, auxiliary aids, equipment, the assistance of personnel, or other means consistent with ensuring the safety and dignity of the passenger (for example, lifting a passenger in a boarding chair). (§ 382.51(b)(2)).

Compliance Dates

Foreign and U.S. carriers must have met the facility accessibility requirements described above at foreign airports by May 13, 2010. (§ 382.51(c)).

Restrictions

As a carrier, you must not subject passengers with disabilities to restrictions that do not apply to other passengers unless otherwise permitted for certain services such as the advance notice requirements under § 382.27. You must not—

(1) Restrict the movements of individuals with disabilities within terminals;

(2) Require them to remain in a holding area or other location to receive assistance, such as transportation, services, or accommodations;

(3) Mandate separate treatment for individuals with disabilities except as required or permitted under Part 382 or other applicable Federal requirements; or

(4) Make passengers with disabilities wear badges or other special identification (unless the passenger gives consent). (§ 382.33).

Automated Kiosks

If existing automated kiosks are inaccessible (for example, to wheelchair users because of height or reach issues or to passengers with vision impairments because of issues related to visual displays or touch screens), as a carrier, you must provide equivalent service for persons with disabilities who cannot use the kiosks for ticketing and obtaining boarding passes. For example, you could allow a passenger who cannot use the kiosk to come to the front of the line at the check-in counter, or carrier personnel could meet the passenger at the kiosk and help the passenger use the kiosk. (§ 382.57).

B. Security Screening for Air Travelers With a Disability

Security Screening for Passengers With a Disability Same as for Other Passengers

All passengers including those with disabilities are subject to TSA security screening requirements at U.S. airports. Passengers at foreign airports, including those with disabilities, may be subject to security screening measures required by the law of the country where the airport is located. (§ 382.55(a)).

If, as a carrier, you want to go beyond mandated security screening procedures, you must conduct the security screening of a passenger with a disability in the same manner as any other passenger. You must not subject a passenger with a disability who possesses a mobility aid or other assistive device used for independent travel to a special screening procedure if the passenger and the aid or assistive device clears security without activating the security system. (§ 382.55(b)(2)).

Screening Mobility Aid or Assistive Device

Your security personnel may examine a mobility aid or assistive device if, in their judgment, it may conceal a weapon or other prohibited item even if the mobility aid or assistive device does not activate the security system.

In the event a passenger's mobility aid or assistive device activates the security system, you may conduct the security search of the passenger with a disability in the same manner as you would for other passengers who activate the system. (§ 382.55(b)(2)(ii)).

Passenger With a Disability Requests Private Screening

You must not require a private security screening for a passenger with a disability for any reason different from the reasons other passengers would be subject to a private security screening. (§ 382.55(b)(3)). However, if a passenger with a disability requests a private security screening in a timely manner, you must provide it in time for the passenger to board the flight. (§ 382.55(c)). If you use technology to conduct a security screening of a passenger with a disability without the need for a physical search of the person, you are not required to provide a private screening. (§ 382.55(d)).

Finally, under certain circumstances, safety considerations may require you to exercise discretion in making the above decisions. You must always seek assistance from the appropriate designated personnel, including your carrier's Complaints Resolution Official (CRO), in making such a decision.

C. Air Travelers With a Disability Moving Through the Terminal and Changing Airplanes

Moving Through the Terminal (Terminal Entrance to Gate and Gate to Terminal Entrance)

As a carrier, you must provide, or ensure the provision of, assistance to a passenger with a disability in moving from the terminal entrance through the airport to the gate for a departing flight or from the gate to the terminal entrance if the passenger or someone on behalf of the passenger requests such assistance or you offer and the passenger with a disability accepts the assistance. This obligation extends to a vehicle drop-off or pick up point adjacent to the terminal entrance and key functional areas of the terminal such as ticket counters and baggage claim. This does not include satellite parking or car rental drop-off areas that are not adjacent to the terminal entrance.

While providing assistance to a disabled passenger in going to, from and between gates, a carriers must, upon request, make a brief stop at the entrance to a rest room, including an accessible rest room when requested, if such a stop is available on the route and the stop can be made without unreasonable delay. (§ 382.91(b), (b)(1), and (b)(2)).

As a carrier, you also must assist passengers who are unable to carry their luggage because of their disability with transporting their luggage for check-in at the ticket counter or gate, or as carry-on aboard the aircraft. This obligation exists only if the passenger requests such assistance and can make credible verbal assurances of his or her inability to carry the item because of his or her disability. If the passenger's verbal assurances are not credible, you may require the passenger to produce documentation as a condition of providing the service. (§ 382.91(d)).

At airports located in the United States, you must in cooperation with the airport operator, provide for escorting a passenger with a service animal to an animal relief area if the passenger requests. (§ 382.91(c)).

Connecting Assistance

The arriving carrier (the one that operates the first of the two flights that are connecting) is responsible for connecting assistance for passengers with a disability moving within the terminal. As an employee/contractor of the arriving carrier, on request, you must provide assistance to a passenger with a disability in making flight connections and providing transportation between gates. The arriving carrier may mutually agree with the carrier operating the departing connecting flight (the second flight of the two flights) that the departing carrier will provide the connecting assistance. However, the carrier operating the arriving flight *is ultimately responsible* for ensuring that connecting assistance is provided to the passenger with a disability. (§ 382.91(a)). This service must be provided regardless of whether the passenger has a single ticket showing a connection or has two separate tickets for the journey.

When needed and to the extent required by law, you must provide the services of personnel, and the use of ground wheelchairs, accessible motorized carts, boarding wheelchairs, and/or onboard wheelchairs, and ramps or mechanical lifts. This requirement is discussed in more detail in Chapters 3 and 5. (§ 382.95(a)).

Note: A carrier and its contractors must not leave a passenger with a disability who has requested assistance unattended in a wheelchair or other device in which the passenger is not independently mobile for more than 30 minutes. This requirement applies even if another person such as a family member or personal care attendant accompanies the passenger unless the passenger with a disability clearly waives this obligation. (§ 382.103)).

Example 1: A passenger who developed a progressive onset of weakness in his legs during his flight requests a wheelchair when he deplanes to assist him in making his connecting flight. What should you do?

Because the arriving carrier is responsible for providing transportation to a passenger with a disability to the gate of his connecting flight, you must provide timely assistance so he makes it to his connecting flight. In addition, you should keep in mind that you cannot leave the passenger unattended for more than 30 minutes in a wheelchair or other device if the passenger is not independently mobile. For purposes of section 382.103, a person who is not independently mobile is a person who would not be able to get up from the wheelchair and maneuver to areas of the terminal such as the restroom or a food service provider without mobility assistance. As a matter of good customer service, you should treat the passenger with courtesy and respect throughout this process.

Example 2: As an arriving air carrier, you provide connecting assistance to a passenger with a disability to the departing carrier's gate. Upon arrival at the departing carrier's gate, you and the passenger find there is no staff at any of the gates yet. What should you do?

If the departing carrier has no staff at any of its gates in that terminal at the time the passenger is brought there (for example, if the passenger missed the second flight because the first flight was delayed), you should advise the passenger of this fact and offer to take the passenger to a staffed location such as the departing carrier's ticket counter, or office location. You should not leave the passenger at an unstaffed gate unless he or she has agreed.

If no departing carrier staff can be located, you should advise the passenger of this fact. If the passenger asks to be taken to the terminal entrance or motor vehicle pickup point (for example, to go to a hotel) you must take the passenger to the terminal entrance or pickup point. If the passenger wishes to remain at the airport, your obligation to an ambulatory passenger ends. For a nonambulatory passenger, you are subject to § 382.103, which states that a carrier must not leave a passenger who has requested connecting assistance unattended in a wheelchair or comparable device, in which the passenger is not independently mobile, for more than 30 minutes. In that situation, you must take the passenger to one of your staffed locations, or at a minimum, you must check on the passenger at least every 30 minutes. Your obligation to provide connecting assistance ends 12 hours after you began the connecting assistance for that passenger, or when the airport closes, or when your carrier's operations at that airport end, whichever comes first.

D. Accommodations for Air Travelers With Vision or Hearing Impairments

U.S. Carriers

As a U.S. carrier, you must ensure that passengers with a disability, including those who identify themselves as persons needing visual or hearing assistance, receive *prompt* access to the same information that you provide to other passengers at each gate, ticketing area, and customer service desk that you own, lease, or control at any U.S. or foreign airport. In this context, ''prompt'' means that you must provide this information to passengers

with vision or hearing impairments as close as possible to the time that the information is transmitted to the general public. However, you are not required to provide information if it would interfere with employee safety and security duties under applicable Federal Aviation Administration (FAA) and foreign government regulations. (§ 382.53(a)(1)).

This requirement applies to a wide variety of areas such as—

- Flight safety,
- Ticketing,
- Flight check-in,
- Flight delays or cancellations,
- Schedule changes,
- Boarding information,
- Connections,
- Gate assignments,
- Claiming baggage,
- Volunteer solicitation on oversold flights (for example, offers of compensation for surrendering a reservation),
- Individuals being paged by airlines,
- Aircraft changes that affect the travel of persons with disabilities, and
- Emergencies (for example, fire, bomb threat) in the terminal.

(§ 382.53(b)).

Foreign Carriers

As a foreign carrier, you must make the same information listed in the section above available to passengers with a disability, including those who identify themselves as needing visual or hearing assistance, at each gate, ticketing area, and customer service desk that you own, lease, or control at any U.S. airport.

At foreign airports, you must make this information available only at gates, ticketing areas, or customer service desks that you own, lease, or control and only for flights that begin or end in the United States. (§ 382.53(a)(2)).

Claiming Baggage

As a carrier, you must provide information on claiming baggage to passengers who identify themselves as persons needing visual or hearing assistance no later than you provide this information to other passengers. (§ 382.53(c)). For example, if you provide information on baggage collection to arriving passengers at the baggage claim area, you can comply with this requirement by giving the information to self-identifying passengers onboard the aircraft or at the gate.

TTY (Text Telephone)

U.S. Carriers

As a U.S. carrier, if you provide a telephone reservation and information service to the public, you must make that service available to individuals who use a TTY (by your own TTY, voice relay (real time text streaming to an Internet connected computer), or other available technology) to permit individuals with hearing impairments to obtain this information. See also Chapter 3, Section E, Accommodations for Air Travelers with Hearing Impairments.

You must make access to the telephone reservation and information service available to TTY users during the same hours as the telephone service is available for the general public. The same wait time and surcharges must apply to TTY users as for non-TTY users of the telephone information and reservation service. In addition, you must ensure that the response time for answering calls and the level of service provided to TTY users is substantially equivalent to the response time and level of service provided to non-TTY users. These requirements ensure that passengers with hearing impairments are on a substantially equivalent footing with the rest of the public in their ability to communicate with carriers about information and reservations by telephone. (§ 382.43(a)(1)–(3)).

If you list the telephone number of your information and reservation service for the general public, you must list your TTY number if you have one. If you do not have a TTY number, you must state how TTY users can reach your information and reservation service for example using a voice relay service. The media used to state these information and reservation services may include Web sites, ticket jackets, telephone books, and print advertisements. (§ 382.43(a)(4)).

The TTY or similar technology also must be available if the passenger with a hearing impairment wishes to contact a CRO. (§ 382.151(b)). You should be familiar with the use of the TTY or similar technology and its locations within the terminal.

In addition, you should be aware of the option of using a relay operator to connect one party who is using a TTY and one party who is using a voice-operated telephone. By dialing 711 on any telephone in the United States (TTY or voice operated) you can contact a relay operator who serves as a ''go between'' between a person using a TTY and a person using a voice-operated telephone. (*http://www.fcc.gov/cgb/consumerfacts/711.html*).

Example: A passenger with a hearing impairment complains to you about another employee whom she believes has been rude and humiliated her when she asked for an alternate means of communication because she was unable to hear what was being said to passengers waiting to board the flight. What should you do?

As a matter of good customer service, you should apologize to the passenger for any insensitive behavior on the part of carrier personnel. In general, you should carefully observe and gauge the manner in which this passenger with a hearing impairment communicates. When communicating, try to use the same method, for example, speaking slowly, communicating in writing or with the assistance of an aid or device. Try to find out what happened and what information she missed by communicating in an accessible manner.

You may also consult with a CRO about sign language or other assistive services that might be available for this passenger. If the CRO is made available by telephone and the passenger requests, TTY service must be available for the passenger to communicate directly with the CRO. You should also notify the appropriate crewmembers to ensure that the transmittal of information onboard the aircraft is accessible to this passenger.

Foreign Carriers

As a foreign carrier, you must have met the TTY requirements that apply to U.S. carriers and described above in this section by May 13, 2010. (§ 382.43(a)(5)). However, these requirements apply only with respect to information and reservation services for flights that begin or end at a U.S. airport. TTY services apply only with respect to flights for which reservation telephone call from the United States are accepted.

Exception

The TTY requirements do not apply to carriers in any country in which the telecommunications infrastructure does not readily permit compliance. (§ 382.43(b)).

E. Safety Assistants

You should know that you must not require a passenger with a disability to be accompanied by another person in order to travel unless you determine that a safety assistant is essential for safety. (§ 382.29(a) and (b)). Similarly, even if you have concerns about a passenger's ability to access the lavatory or the passenger's need for extensive special assistance which airline personnel are not obligated to provide (for example, assistance in eating, assistance within the lavatory, or provision of medical services (§ 382.113), you must not require the passenger with a disability to travel with a safety assistant or personal care attendant except in the circumstances described below. (§ 382.29(f)).

Safety Considerations May Necessitate a Safety Assistant

In the interest of safety, you may require that a passenger with a disability travel with a safety assistant if the passenger is—

- Traveling on a stretcher or in an incubator (where such service is offered);
- Because of a mental disability is unable to comprehend or respond appropriately to safety instructions including the safety briefing;
- Severely mobility impaired and would be unable to assist in the passenger's own evacuation from the aircraft; or
- Severely hearing and vision impaired such that the passenger could not adequately communicate with airline employees with regard to the safety briefing and assist in his or her evacuation in the event of an emergency. (§ 382.29(b)(1) through (b)(4)).

Carrier Contends That Attendant Is Required for Safety Reasons and Passenger Disagrees

If after careful consultation with a CRO and any other personnel you are required to consult, you determine that a passenger with a disability must travel with a safety assistant for one of the reasons described in § 382.29(b) (see list above), then you may require that the passenger be accompanied by a safety assistant. If your decision differs from the self-assessment of the passenger with a disability, then you must not charge for the transportation of the safety assistant. (§ 382.29(c))(1)). In addition, if a seat is not available on the flight for the safety assistant whom you have determined to be necessary and, as a result, the passenger with a disability with a confirmed reservation is unable to travel on the flight, the passenger with a disability is eligible for denied boarding compensation. (§ 382.29(d)). For purposes of determining whether a seat is available for a safety assistant, you must consider the assistant to have checked in at the same time as the passenger with a disability. (§ 382.29(e)).

In the event you choose to recruit a safety assistant to accompany the passenger with a disability, even though carriers are not obligated to do so (§ 382.29(c)(1)), you may ask—

(1) An off-duty airline employee traveling on the same flight to function as the safety assistant;

(2) A volunteer from among the other customers traveling on the flight and offer compensation, such as a free ticket, for their assistance; or

(3) The passenger with a disability to provide his or her own safety assistant and you must offer a free ticket to that assistant.

If the safety assistant is accompanying a passenger traveling on a stretcher or in an incubator, the assistant must be capable of attending to the passenger's in-flight medical needs. (§ 382.29(b)(1)). Otherwise, the purpose of the assistant is to assist the passenger with a disability in an emergency evacuation. Other than the situation described above when a safety assistant is accompanying a passenger who is on a stretcher or in an incubator, the assistant is not obligated to provide personal services to the passenger with a disability such as assistance with eating or accessing the lavatory.

Example: A passenger with quadriplegia [13] traveling alone approaches the check-in counter. You have concerns as to whether the passenger's mobility impairment is so severe that he would be unable to assist in his own evacuation from the aircraft. What should you do?

You should begin by communicating with the passenger to determine the extent of his mobility impairment. As a matter of good customer service, you should treat the passenger with courtesy and respect at all times. Under the circumstances, you should contact a CRO to discuss the situation and determine whether a safety assistant must accompany the passenger. You and the CRO could begin by asking the passenger about his mobility impairment and whether he would be able to assist with his own evacuation in the event of an emergency. More specifically, you should determine whether the passenger has the functional ability to make any progress toward an exit during an evacuation. If the passenger tells you that his ability to assist in his evacuation is limited to shouting, ''Help!'' you and the CRO should explain to him that the issue is whether he can physically assist in his own evacuation. If not, he must travel with a safety assistant.

If, after speaking with the passenger, you and the CRO determine that a safety assistant must accompany him because of his severe mobility impairment, you should explain this requirement to the passenger. Next, at the carrier's option you can explain that he can choose someone to serve as his safety assistant or you can assist him by recruiting an off-duty employee or another passenger on the flight to serve as his safety assistant. You must not charge for the transportation of the safety assistant if selected by the passenger who is disabled. You also should explain that the purpose of the safety assistant is to assist in the case of an emergency evacuation.

Passenger With a Disability Voluntarily Chooses To Travel With a Personal Care Attendant or Safety Assistant

If a passenger with a disability chooses to travel with a personal care attendant or safety assistant that you, the carrier, do not require, or you feel that the passenger requires a safety assistant and the passenger agrees, then you may charge for the transportation of that attendant or assistant. (§ 382.29(c)(3)).

Advance Notice Requirements for Individuals With Both Severe Hearing and Vision Impairment

As a carrier, you may require a passenger with both a severe hearing and vision impairment who wishes to travel without a safety assistant to notify you at least 48 hours in advance. However, you still must accommodate the passenger to the extent practicable even if the passenger fails to meet the 48-hour advance notice requirement. (§ 382.29(b)(4)).

You may require an individual with a severe hearing and vision impairment to travel with a safety assistant if you determine that the means of communication that the individual plans to use with you does not (1) satisfy the communication objectives for a safety briefing contained in Part 382 or (2) enable the individual to assist in his or her own evacuation. You also may require the individual with a severe hearing and vision impairment to travel with a safety assistant if the individual proposes to communicate by finger spelling and you cannot within the time following the individual's notification arrange for the availability on the passenger's flight of a flight crewmember who can communicate using this method. (§ 382.29(c)(2)).

Chapter 5: Assisting Air Travelers With Disabilities Boarding, Deplaning, and During the Flight

A. Aircraft Accessibility
B. Seating Assignments and Accommodations
C. Boarding and Deplaning Assistance
D. Stowing and Treatment of Assistive Devices
E. Services and Information Provided in the Cabin
F. Safety Briefings

A. Aircraft Accessibility

Aircraft Accessibility Features

To assist passengers with a disability, it is important for you to understand how aircraft have been made accessible to accommodate those passengers. You should be aware that Part 382 addresses the following features depending on the size of the aircraft:

- Movable aisle armrests,
- Priority stowage space for passenger wheelchairs,
- Accessible lavatories,

[13] Quadriplegia means the inability to move all four limbs or the entire body below the neck.

- On-board wheelchairs, and
- New in-flight audio-visual services.

Each of these features is discussed separately in detail below.

Movable Aisle Armrests

Aircraft with 30 or more passenger seats must be equipped with movable aisle armrests on at least one-half of the aisle seats in rows in which passengers with mobility impairments are permitted to sit under Federal Aviation Administration (FAA) or applicable foreign safety regulations (§ 382.61(a)), and you are not required to provide movable armrests on aisle seats of rows in which a passenger with a mobility impairment is not allowed to use by an FAA safety regulation. (§ 382.61(b)).

You must configure aircraft cabins or establish an administrative system to ensure that passengers with a disability can readily identify and obtain seating in rows with movable aisle armrests. You must provide this information to passengers by specific seat and row number. (§ 382.61(d))

Note: The revised rule removes the infeasibility provision prescribed in old § 382.21(a)(1)(ii). Therefore, carriers can no longer claim it is not feasible to install movable armrests on aisle seats in which the carrier has chosen to install, for example, integrated food trays, controls for in-flight video systems, etc.

(1) Seat Ratio

Movable aisle armrests must be provided proportionately in all classes of service in the aircraft cabin. (§ 382.61(c)).

Example: If 80 percent of the aisle seats in which passengers with mobility impairments may sit are in economy/coach class, and 20 percent are in first class, then 80 percent of the movable aisle armrests must be in economy/coach class, with 20 percent in first class.

However, if the seats without a movable aisle armrest in a given class of service can be accessed by a passenger using a wheelchair by horizontally transferring the passenger from a boarding wheelchair to the aircraft seat without lifting the passenger over the aisle armrest or other obstacle, a carrier may request an equivalent alternative determination.

(2) Replacement Seats

As a carrier, you are not required to retrofit cabin interiors of existing aircraft to include movable aisle armrests. However, when you remove aisle seats on existing aircraft and replace them with newly manufactured seats, one-half of the replacements seats must have movable armrests. (§ 382.61(e)).

Example: As a carrier, if you replace four aisle seats with newly manufactured seats, then two of these seats must have movable armrests. If you are replacing an odd number of seats, a majority of the newly manufactured aisle seats installed must have movable armrests. If you replace five aisle seats with newly manufactured seats, at least three of the newly manufactured aisle seats must have movable armrests. However, you are not required to have more than 50 percent of the aisle armrests in the cabin be moveable. Suppose your aircraft has 40 aisle seats, 20 of which have movable armrests, and you decide to replace 5 aisle seats that do not have movable armrests with newly manufactured seats. These new seats do not have to include movable armrests.

3. Compliance Dates

U.S. Carrier	Movable aisle armrests	You must meet the requirements for movable aisle armrests, except for the seat ratio requirement, for all new aircraft you operate that were initially ordered after April 5, 1990, or delivered after April 5, 1992.
	Replacement aisle seats	You must meet this requirement for all new aircraft you operate that were initially ordered after April 5, 1990, or delivered after April 5, 1992.
	Seat ratio	You must meet these requirements for new aircraft you operate that were initially ordered after May 13, 2009, or are delivered after May 13, 2010. (§ 382.61(f)).
Foreign Carrier	Movable aisle armrests Seat ratio.	You must meet these requirements, except with respect to replacement aisle seats discussed above, for new aircraft you operate that were initially ordered after May 13, 2009, or are delivered after May 13, 2010. (§ 382.61(f)).
	Replacement aisle seats	You must meet the requirement regarding replacement aisle seats for seats ordered after May 13, 2009. (§ 382.61(g)).

Priority Storage Space for Passenger Wheelchairs

(1) Aircraft With 100 or More Passenger Seats

You must have a priority storage space in the cabin to stow at least one typical adult-sized folding, collapsible, or break-down manual wheelchair. This priority storage space must be at least 13 inches by 36 inches by 42 inches (13 x 36 x 42) to allow storage of the wheelchair without removing its wheels or disassembling the wheelchair. (§ 382.67(a)). Priority storage space for a passenger's wheelchair in the cabin is important for two reasons. It is often more convenient for a passenger to have a wheelchair close by when he or she leaves the aircraft and to be able to get as close as possible to the aircraft door for boarding. In addition, passengers with disabilities have the same concerns as other passengers about the loss of or damage to their property when it is checked.

The priority storage space for a passenger's wheelchair must be in addition to the normal under seat and overhead compartment storage available for carry-on items. (§ 382.67(b)). In addition, if you use a closet or other storage area for stowing the passenger's wheelchair, the wheelchair has *priority* over other possible uses including passenger bags and crewmember luggage.

You should be aware that this requirement for priority space to stow a passenger's manual wheelchair is *in addition* to requirements you may have to carry an onboard wheelchair as discussed below. (§ 382.65).

Note: Carriers are not required to carry electric wheelchairs in the cabin.

(2) Compliance Dates

U.S. Carrier	You must meet the priority stowage space requirement for new aircraft you operate ordered after April 5, 1990, or delivered after April 5, 1992.
Foreign Carrier	You must meet the priority stowage space requirement for new aircraft ordered after May 13, 2009, or delivered after May 13, 2010.

Accessible Lavatories

(1) Aircraft With More Than One Aisle

Aircraft with more than one aisle that are equipped with lavatories must have at least one lavatory accessible to passengers with a disability. This accessible lavatory must allow the passenger to enter the lavatory, maneuver within it and use all of its facilities, and leave the lavatory using the aircraft's on-board wheelchair. The accessible lavatory must afford privacy to persons using the on-board wheelchair equivalent to that afforded ambulatory persons. The lavatory must include door locks, accessible call buttons, grab bars, faucets and other controls and dispensers usable by passengers with a disability including wheelchair users and persons with manual impairments. (§ 382.63(a)).

You are not required to retrofit aircraft with accessible lavatories. However, if you replace an inaccessible lavatory on an existing twin-aisle aircraft, you must install an accessible lavatory. (§ 382.63(c)).

(2) Aircraft With One Aisle

You are not required, but may provide, an accessible lavatory on aircraft with only one aisle. (§ 382.63(b)).

You are not required to retrofit aircraft with one aisle with accessible lavatories. (§ 382.63(c)).

(3) Compliance Dates

U.S. Carrier	You must meet all of the accessible lavatory requirements for new aircraft you operate that were initially ordered after April 5, 1990 or delivered after April 5, 1992. (§ 382.63(d) and (e)).
Foreign Carrier	You must meet the requirement for an accessible lavatory for new aircraft you operate that were initially ordered after May 13, 2009 or delivered after May 13, 2010. (§ 382.63(d)). However, beginning May 13, 2009, if you replace an inaccessible lavatory on an existing twin-aisle aircraft you must install an accessible lavatory. (§ 382.63(e)).

On-Board Wheelchairs

(1) Aircraft With More Than 60 Passenger Seats With an Accessible Lavatory

You must provide an on-board wheelchair if the aircraft has an accessible lavatory. You must meet this requirement whether or not an accessible lavatory is required as discussed above. However, the Aerospatiale/Aeritalia ATR–72 and the British Aerospace Advanced Turboprop (ATP) configured with between 60 and 70 passenger seats are exempt from this requirement. (§ 382.65(a)).

(2) Aircraft With More Than 60 Passenger Seats With an Inaccessible Lavatory

Some passengers with limited mobility may be able to use an inaccessible lavatory on their own but may need assistance to the lavatory in an on-board wheelchair. Therefore, in an aircraft with *more than 60 passenger seats* and an inaccessible lavatory, you must provide an on-board wheelchair if a passenger with a disability informs you that he or she is able to use an inaccessible lavatory but cannot reach the lavatory from a seat without the use of an on-board wheelchair. You may require the passenger to provide up to 48 hours' advance notice and check-in 1 hour before the check-in time for the general public to receive this service. (§§ 382.65(b) and 382.27(c)(7)).

In summary, with respect to *all aircraft with more than 60 passenger seats,* regardless of the age of the aircraft, you must provide an on-board wheelchair if—

(1) The aircraft has an accessible lavatory, or

(2) A passenger with a disability gives up to 48 hours' notice that the passenger can use an inaccessible lavatory. (§ 382.65)(b).

You should be aware that if a particular aircraft is required to have an on-board wheelchair and a storage space within the cabin for at least one passenger's manual folding wheelchair, that aircraft must have storage spaces for *both* of these wheelchairs and must accommodate *both* of these wheelchairs.

(3) Compliance Dates

U.S. Carrier	You must have met the on-board wheelchair requirements by May 13, 2009.
Foreign Carrier	You must have met the on-board wheelchair requirements by May 13, 2010.

New In-Flight Audio-Visual Services

(1) High-Contrast Captioning

As a carrier, you must ensure that all *new* videos, DVDs, and other audio-visual displays used on the aircraft for safety and informational purposes are high-contrast captioned. This requirement, however, does not apply to informational audio-visual displays that were not created under your control. (§ 382.69(a)). The Department of Transportation (DOT) considers audio-visual displays as being created under your control even if a contractor or other third party produces the display as long as you have significant editorial control or approval of the video's content. The use of the word ''new'' means that you are not required to replace or retrofit existing audio-visual displays.

''High-contrast captioning'' means captioning that is at least as easy to read as white letters on a consistent black background. (§ 382.3). The captioning must be in the predominant language or languages that you use to communicate with passengers on the flight. If you communicate in more than one language on the flight (for example, French and English on a Canadian carrier), the captioning must be in all of these languages. (§ 382.69(a)).

(2) Compliance Dates

As a U.S. or foreign carrier, you must have met the high-contrast captioning requirement with respect to audio-visual displays used for safety purposes by November 10, 2009. (§ 382.69(b)). The captioning requirement with respect to informational displays was effective January 8, 2010. (§ 382.69(d)).

Maintaining Accessibility and Replacing or Refurbishing the Aircraft Cabin

You must maintain aircraft accessibility features in proper working order. (§ 382.71(a)). In addition, any replacement or refurbishing of the aircraft cabin must not reduce existing accessibility to a level below that required under Part 382 for new aircraft. (§ 382.71(b)) . As discussed above, if you replace an inaccessible lavatory on an existing twin-aisle aircraft, you would have to install an accessible lavatory, unless the aircraft is already equipped with another accessible lavatory. (§ 382.63(c)). If you remove aisle seats on existing aircraft and replace them with newly manufactured seats, one-half of the replacements aisle seats must have movable armrests. (§ 382.61(e)).

B. Seating Assignments and Accommodations

Only Safety Affects Seat Assignments

You must not exclude a passenger with a disability from any seat or require a passenger with a disability to sit in a particular seat based on the passenger's disability, except to comply with FAA or foreign government safety requirements. (§ 382.87(a)). If a passenger's disability results in an involuntary active behavior that would result in you properly refusing to provide the passenger transportation under § 382.19 and the passenger could be transported safely if seated in another location, you must offer the passenger that particular seat location as an alternative to refusing to provide the passenger transportation. (§ 382.87(c)).

Example: A passenger with Tourette's syndrome (a neurological disability that manifests itself by episodes of shaking, muscle tics, and/or spasms and uncontrolled shouting, barking, screaming, cursing, and/or abusive language) approaches the check-in desk, self-identifies himself as a passenger with a disability, and presents brochures explaining the disability to the agent. What should you do?

If safety is not an issue, you cannot restrict this passenger from any particular seat, including an exit row. If this passenger's disability causes him to physically touch other passengers or crewmembers involuntarily, safety considerations could require that he be seated in his own row, if available, as an alternative to you refusing to provide the passenger transportation. However, if the physical and/or verbal manifestations of this passenger's Tourette's syndrome jeopardize the safety of others it might create a safety concern. For example, if the passenger with Tourette's syndrome involuntarily touches or strikes other passengers or crewmembers, or the passenger is yelling ''fire'' or yelling continuously. Continuous yelling could hinder other passengers from hearing important crewmember announcements. Therefore, refusing to provide the passenger with transportation could be appropriate.

Although the passenger's conduct may create an uncomfortable experience for other passengers, if the involuntary behavior is only an annoyance and not a safety concern, you must not restrict the passenger with Tourette's syndrome from any seating assignment.

Required Seating Accommodations for Passengers With Disabilities—Four Specific Situations

If a passenger self-identifies as a passenger with a disability, there are four specific situations where you must provide a particular seating accommodation. You must meet this requirement for passengers who self-identify as having certain qualifying disabilities if the passenger requests the accommodation and the type of seating accommodation requested exists on the particular aircraft. (§ 382.81). The four situations are as follows:

(1) *Moveable armrests.* If the passenger uses an aisle chair to access the aircraft and cannot readily transfer over a fixed aisle armrest, you must provide a seat in a row with a movable armrest. You must train your personnel in the location and proper use of the movable aisle armrests, including appropriate transfer techniques. In addition, you must ensure that aisle seats with movable armrests are clearly identifiable. (§ 382.81(a)).

Note: Some carriers that have requested and been granted equivalent alternative determination approvals for the movable armrest requirement have training requirements stated in the grant of approval that exceed those required under Part 382.

(2) *Adjoining seats.* You must provide an adjoining seat for a person assisting a passenger with a disability if the passenger is—

- Traveling with a personal care attendant who will be performing functions during the flight that airline personnel are not required to perform (for example, assistance with eating); (§ 382.81(b)(1))
- Visually impaired and traveling with a reader/assistant who will be performing functions for the passenger during the flight; (§ 382.81(b)(2))
- Hearing impaired and traveling with an interpreter who will be performing functions for the passenger during the flight; (§ 382.81(b)(3)) and
- Traveling with a safety assistant that you have required under § 382.29. (§ 382.81(b)(4)).

(3) *Service animal.* If the passenger with a disability is traveling with a service animal, you must provide either a bulkhead seat or a seat other than a bulkhead seat, depending on the passenger's request. (§ 382.81(c)).

Note: A passenger traveling with a service animal would not be permitted to sit in the bulkhead seat if that seat is located in an emergency exit row. (14 CFR 121.585).

(4) *Fused or immobilized leg.* If the passenger has a fused or immobilized leg (that is, an inability to bend the leg as opposed to a passenger whose legs are paralyzed but which can bend at the knees), you must provide a bulkhead seat or other seat with more legroom than other seats on the side of the aisle that best accommodates the passenger's disability. (§ 382.81(d)).

Seat Assignment Methods

The type of seat assignment method your carrier uses will determine how you are to provide appropriate seating accommodations. You should be aware of your carrier's method for managing seat assignments and be able to explain it to passengers with disabilities and the general passenger population depending on the circumstances.

Advance Seat Assignments

Carriers providing advance seat assignments may use either the block seating method or the priority seating method to provide the seating accommodations discussed above. (§ 382.83(a)).

Block Seating Method

Carriers may block an adequate number of seats to be used by passengers who meet the requirements of § 382.81. (§ 382.83(a)(1)). If your carrier employs the block method, you must not assign these ''blocked seats'' to passengers other than the types of passengers entitled to the accommodation until 24 hours before the scheduled departure of the flight. (§ 382.83(a)(1)(i)). At any time up until 24 hours before the scheduled departure of the flight, you must assign a blocked seat to any passenger who qualifies for such a seating accommodation. (§ 382.83(a)(1)(ii)).

If a passenger with a disability who is entitled to a seating accommodation listed above does *not* make a request for the accommodation at least 24 hours before the scheduled departure of the flight, you must provide the requested seating accommodation to the extent

practicable, but you are not required to reassign a seat already assigned to another passenger to do so. (§ 382.83(a)(1)(iii)).

Example: A passenger with a service animal calls and speaks to you, a reservation agent, several days before the scheduled departure of her flight and requests a bulkhead seat. What should you do?

The aircraft has four bulkhead seats, two of which are blocked under your carrier's reservation system for passengers traveling with a service animal or passengers with an immobilized leg. Because the passenger has requested the seating accommodation more than 24 hours in advance of the scheduled departure of the flight, you must assign one of the blocked bulkhead seats to this passenger with the service animal.

If, on the other hand, the passenger with the service animal requests the bulkhead seat within 24 hours of the scheduled departure of the flight, you must provide the bulkhead seat to the passenger and the service animal if available, but you are not required to reassign a bulkhead seat already assigned to another passenger.

Note: Part 382 requires carriers to block an adequate number of bulkhead seats for passengers with a fused or immobilized leg or a passenger traveling with a service animal. DOT's Office of Aviation Enforcement and Proceedings has interpreted ''adequate'' to mean, for example, (in the context of bulkhead seating) that if an aircraft has six total bulkhead seats, three on each side separated by the main aisle, an ''adequate'' number of bulkhead seats that must be blocked would be at least two of the six bulkhead seats.

Priority Seating Method

Carriers may designate an adequate number of priority seats for passengers with a disability who meet the requirements of § 382.81. (§ 382.83(a)(2)). Carriers that have chosen to use this seating method must provide notice to any passenger assigned to a priority seat (other than a passenger with a disability listed in § 382.81) that he or she may be reassigned to another seat if necessary to provide a seating accommodation required under Part 382. (§ 382.83(a)(2)(i)). A carrier may provide this potential reassignment notice through—

- Its computer reservation system,
- Verbal information provided by reservations personnel,
- Ticket notices,
- Gate announcements,
- Counter signs,
- Seat cards or notices,
- Frequent-flyer literature, or
- Other appropriate means.

(§ 382.83(a)(2)(ii)).

You must assign a ''priority seat'' to a passenger with a disability entitled to such accommodation at the time the passenger requests the accommodation. A carrier may require that the passenger check in and request the seating accommodation at least 1 hour before the standard check-in time for the flight. (The purpose for this advance check-in is to allow carriers sufficient time to conduct any seat reassignment that this method sometimes requires.) If all of the designated priority seats have been assigned to other passengers who do not have qualifying disabilities, you must reassign the seats of the other passengers to accommodate the passenger with a disability entitled to the seating accommodation. (§ 382.83(a)(2)(iii)).

If a passenger with a disability who is entitled to a seating accommodation does *not* check in at least 1 hour before the standard check in time for the general public, you must provide the requested seating accommodation, to the extent practicable, but you are not required to reassign a seat assigned to another passenger to do so. (§ 382.83(a)(2)(iv)).

Example: A passenger with an immobilized leg requests a bulkhead seat and checks in 2 hours before the standard check-in time for the general public. Your carrier employs the ''priority'' seating method and has designated two of the six bulkhead seats on the aircraft as priority seating. The four non-priority bulkhead seats have been previously assigned to passengers without any disabilities. One of the two priority bulkhead seats has already been assigned to a passenger traveling with a small service animal who requested the seating accommodation and checked in at least 1 hour before the standard check-in time for the general public. The second priority bulkhead seat has been assigned to a passenger who also checked in 2 hours before the flight and who uses an aisle chair to board but prefers the bulkhead seat to a seat in a row with a movable armrest. What should you do?

The passenger who uses the aisle chair to board should have received notice that he has been assigned a ''priority'' seat. Because that passenger does not have a fused or immobilized leg or is not traveling with a service animal, the passenger is not automatically entitled to a ''priority'' bulkhead seat. (However, that passenger would be entitled to a ''priority'' seat in a row with a movable armrest if he or she requested such a seat and checked in at least 1 hour before the standard check-in time for the flight.) The passenger using the aisle chair to board should have been notified that you might have to reassign his seat if a passenger with a service animal or a passenger with an immobilized leg requests a ''priority'' bulkhead seating accommodation and checks in at least 1 hour before the standard check-in time for the flight. Therefore, the passenger using the aisle chair should be reassigned to a seat in a row with a movable armrest and the passenger with the immobilized leg should be assigned to the second ''priority'' bulkhead seat.

Seat Assignment Only on the Day of Flight

If a carrier does not provide seat assignments until the day of the flight, the carrier must use the priority seating method for passengers with a disability who meet one of the four criteria described in § 382.81. (§ 382.83(b)).

No Advance Seat Assignments (Use the Preboarding Method)

If your carrier does not provide advance seat assignments including the ability to pay for a seat in advance,[14] you must allow passengers who identify themselves as passengers with a disability in need of a seating accommodation to preboard before all other passengers, including other passengers entitled to preboard, and select the seats that best meet their needs. (§ 382.83(c)).

Other Possible Seating Methods

If your carrier wishes to use a method of assigning seats to passengers with disabilities other than one of the methods provided for in Subpart F of Part 382, it must receive written approval from DOT. (§ 382.83(d)).

Seating Accommodations for Passengers With a Disability—Other Than One of Those Specifically Discussed Above

Carriers are also required to provide seating accommodations for passengers who self-identify as having a disability other than one involving any of the four criteria discussed above, and who need a particular seat to ''readily access and use'' the carrier's services. (§ 382.85). (This is referred to as the catchall category). Carriers should evaluate a passenger's request for a seating accommodation covered by the catchall category based on a case-by-case analysis of the nature of the passenger's specific disability and the extent to which that disability necessitates the requested seating accommodation for the passenger to readily access the aircraft.

For example, if a passenger self-identified as being deaf or diabetic and requested a bulkhead seat assignment, a carrier would not be required to assign such a passenger to a bulkhead seat because the passenger is able to readily able to use a seat other than in a bulkhead row. On the other hand, a very large non-ambulatory passenger boarding with an aisle wheelchair whose size makes it very difficult for

[14] If a carrier allows passengers to pay for advance seating, the carrier must use either the block or priority seating method.

him to fit down the main aisle would probably be entitled to an available bulkhead seat (provided that the bulkhead row is not an emergency exit row) because he could not otherwise readily access the aircraft.

Advance Seat Assignments

Block Seating Method (For the ''Catchall'' Category)

When a passenger with a disability, which does not meet one of the four specific criteria described in § 382.81 makes a reservation more than 24 hours before the scheduled departure time of a flight and the carrier uses the block seating method, the carrier is *not* required to offer one of the seats blocked for the passengers with disabilities who are specifically entitled to the seating accommodations described above in § 382.81. However, you must assign the passenger with a disability any seat not already assigned to another passenger that accommodates the passenger's needs, even if that seat is not available for assignment to the general passenger population at the time of the request. (§ 382.85(a)(1)(i).

Example: A passenger with arthritis in his spine, making his back extremely stiff, calls a week before his flight and asks you, the reservation agent, for a bulkhead seat. He explains that it is much easier and less painful for him to access a bulkhead seat because he has to be lowered into the seat with assistance from another person, and that this process is much more difficult, if not impossible, in any row other than a bulkhead row. The aircraft has six bulkhead seats, two of which are ''blocked'' under your carrier's reservation system for passengers traveling with service animals or passengers with a fused or immobilized leg. One of the four remaining bulkhead seats is unassigned when he calls. What should you do?

Although your carrier normally reserves such seats for its frequent flier passengers, you must assign the remaining bulkhead seat to the passenger with arthritis in his spine because the seat was unassigned at the time of his request and he has a reasonable argument that he needs the bulkhead seat to readily access the aircraft.

Priority Seating Method (For the ''Catchall'' Category)

If your carrier uses the priority seating method, you must assign a passenger with a disability (which does not meet one of the four specific criteria described in § 382.81) any seat not already assigned to another passenger that accommodates the passenger's needs, even if that seat is not available for assignment to the general passenger population at the time of the request. Your carrier may require the passenger to check in 1 hour before the standard check-in time for the flight. If this passenger with a disability is assigned to a designated priority bulkhead seat, the passenger is subject to being reassigned to another seat if necessary to provide a seating accommodation to a passenger with a disability entitled to and who requests a required seating accommodation described above. (§ 382.85(a)(2)).

Example: The same passenger, with arthritis in his spine, from the previous example, calls your carrier, asking for a bulkhead seat, but your carrier uses the ''priority'' seating method. The aircraft has six bulkhead seats, two of which are ''priority'' seats for passengers traveling with service animals or passengers with immobilized legs. At the time of the call, all four of the other ''non-priority'' bulkhead seats have been assigned to other passengers, but the two priority seats are unassigned. What should you, as a reservation agent, do?

You should assign the passenger with arthritis in his spine one of the two unassigned ''priority'' seats, but you must notify him that he may have his'' priority'' seat reassigned if another passenger who is specifically entitled to a ''priority'' seat requests one. On the day of the flight, a passenger with a service animal and a passenger with a fused leg arrive more than 1 hour before the standard check-in time for the same flight and request bulkhead seats. In this instance, you would inform the passenger with arthritis in his spine that his ''priority'' seat must be assigned to one of those passengers and that he must be moved to another seat. As a matter of good customer service, he may be assigned an aisle seat because it would be easier for him to access, or you could ask a passenger with a bulkhead seat who does not have a disability if he or she would mind trading seats with the passenger.

No Advance Seat Assignments (Use the Preboarding Method)

If your carrier does not provide advance seat assignments including the ability to pay for an advance seating assignment,[15] you must allow passengers who identify themselves as passengers with a disability in need of a seating accommodation to preboard before all other passengers, including other passengers entitled to preboard, and select the seats that best meet their needs. (§ 382.85(b))

Seat Assignments Only on the Day of Flight (For the ''Catchall'' Category)

If your carrier does not assign seats to passengers until the day of the flight, it must use the priority seating method for passengers with a disability. (§ 382.85(c)).

[15] As previously noted, if a carrier allows passengers to pay for advance seating, the carrier must use either the block or priority seating method.

Other Issues Relating to Seat Assignments

As a carrier, you—

- Must comply with all FAA and applicable foreign government safety requirements, including exit row seating requirements in 14 CFR 121.585, when responding to requests from passengers with a disability for seating accommodations. (§ 382.87(b)).
- Must not deny transportation to any passenger on a flight in order to provide a seat accommodation required by Subpart F to a passenger with a disability. (§ 382.87(e)).
- Cannot reassign the seat of a passenger with a disability who has received a seat assignment as required by Subpart F even if another passenger with a disability requests the same seat unless the first passenger agrees to the reassignment. (§ 382.87(d)) The only exception is when you assign a designated ''priority'' seat to a passenger with a disability who is not required to receive a seating accommodation specified in § 382.81. (§ 382.85(a)(2)(ii)).
- Are not required to provide more than one seat per ticket or a seat in a class of service other than the one the passenger has purchased to accommodate a passenger with a disability who requests a seating accommodation. (§ 382.87(f)).

Example: A passenger with an economy/coach class ticket and an immobilized leg (with a full-leg cast) arrives more than 1 hour before the standard check-in time for his flight. He arrives at the check-in counter, explains his disability, and insists that he is entitled to a seat in first class to accommodate his extended leg. Your carrier uses the priority seating method for advance seat assignments. What should you do?

Because the passenger has identified himself as a passenger with a disability and requested a seat assignment to accommodate his disability, you must provide a bulkhead seat or other seat with more legroom than other seats on the side of the aisle that best accommodates him. While first class seats generally have more legroom than economy/coach class seats, you are not required to provide a seat in a class of service other than the one the passenger has purchased to accommodate the passenger. You should explain politely and respectfully that under the law, you must seat him in either a bulkhead seat or an aisle seat in economy/coach class on the side of the aircraft that would best accommodate his leg. At his subsequent request for a bulkhead seat in economy/coach class, you must arrange to move another passenger from the bulkhead seat in economy/coach class and give it to the passenger with the immobilized leg unless the seats have already been assigned to passengers entitled to retain those seats under the rules discussed above. Although you are not required to do so, you may choose to seat him in a first class seat that would accommodate his immobilized leg.

As previously noted, some carriers now offer passengers the option of paying an extra fee for obtaining advance seat assignments for preferred seats that provide, for example, greater legroom than other seats in the same class of service. Such policies are permitted, provided that carriers also reserve (that is, block or prioritize) an adequate number of seats to comply with DOT rules providing seating accommodations for qualified individuals with disabilities at no extra cost to such passengers, as discussed above.

C. Boarding and Deplaning Assistance

Preboarding Passengers With a Disability

As a carrier, you must offer preboarding to passengers with a disability who self-identify at the gate as needing additional time or assistance to board, stow accessibility equipment, or be seated. (§ 382.93) This obligation exists regardless of your preboarding policies for other passengers (for example, families traveling with small children). You are not obligated to make a general announcement about preboarding in the gate area for passengers with disabilities if you do not make preboarding announcements for other passengers. However, as a matter of general nondiscrimination principles, if a passenger self-identifies as needing preboarding and if you make a preboarding announcement in the gate area for other passengers you would have to make such an announcement for passengers with a disability.

General Obligations for Boarding and Deplaning Assistance

If a passenger with a disability requests assistance getting on or off an aircraft, or you or the airport operator offer assistance, and the passenger consents to the type of boarding or deplaning assistance offered, you must *promptly* provide such assistance. (§ 382.95(a)) In the case of deplaning a non-ambulatory passenger, if the passenger has provided advance notice that he or she will need wheelchair deplaning assistance to exit the aircraft and the carrier has documented the passenger's reservation record with a Special Service Request (SSR) notation to that effect, ''promptly'' means that personnel and an appropriate deplaning aisle wheelchair should be available to assist the passenger with a disability in exiting the aircraft as soon as the last ambulatory passengers has deplaned. If the passenger with a disability is able to walk off the aircraft along with the other passengers but needs a wheelchair to travel from the aircraft into the terminal, carrier personnel and a wheelchair should be waiting at the door of the aircraft when the deplaning process begins.

The type of assistance you must offer includes the services of personnel and the use of wheelchairs, accessible motorized carts, ramps, or mechanical lifts as required under Part 382. (§ 382.95(a)). Be mindful that a wheelchair is not required or desired in all cases. A wheelchair may not be an appropriate assistive device in a particular situation. For example, a passenger with a vision impairment may request a sighted guide rather than a wheelchair, and requiring such a passenger to accept wheelchair service that is neither requested nor required to accommodate the passenger's disability would violate DOT's rule. (§ 382.11(a)(2)).

You must train employees to proficiency in the use of the boarding assistance equipment and procedures regarding the safety and dignity of passengers receiving boarding assistance. (§ 382.141(a)(1)(iii) and (b)) See Chapter 8: Personnel Training, for additional information on employee/contractor training requirements.

Boarding and Deplaning Assistance Where Level-Entry Boarding Is Unavailable

As a carrier operating aircraft with 19 or more passenger seats at U.S. commercial service airports with 10,000 or more annual enplanements, you must provide boarding and deplaning assistance to passengers with a disability using lifts or ramps if level-entry loading bridges or accessible passenger lounges are not available. (§ 382.95(b)). U.S. carriers have been required to provide level-entry boarding at such U.S. airports for many years, and foreign carriers have been required to provide it no later than May 13, 2011. See Appendix II for a discussion of the agreements carriers must have with airports for the provision of lifts where level-entry loading bridges are not available. (§ 382.99).

However, boarding assistance using a lift is not required on:

- Aircraft with fewer than 19 passenger seats;
- Float planes;
- The following 19-seat capacity aircraft models that are unsuitable for boarding assistance using a lift: the Fairchild Metro, the Jetstream 31 and 32, the Beech 1900 (C and D Models), and the Embraer EMB–120; or
- Any other aircraft model the DOT determines to be unsuitable for boarding and deplaning assistance by lift, ramp, or other suitable device. (§ 382.97(a) through (c)).

As a carrier at a U.S. airport that you own, lease, or control, you must ensure that there is an accessible route (one meeting the requirements of the Americans with Disabilities Act Accessibility Guidelines (ADAAG)) between the gate and boarding area whenever an accessible passenger lounge to and from an aircraft or other means of level-entry boarding and deplaning is not available. An ''accessible route'' essentially means that a passenger should be able to travel from the gate area to the tarmac level while remaining in a wheelchair, and does not include stairs, steps, or escalators. (§ 382.51(a)(2)).

As a carrier, you may require that a passenger seeking boarding and deplaning assistance using a lift or ramp check in for the flight 1 hour before the standard check-in time for the flight. However, if the passenger checks in after this time you must make a reasonable effort to accommodate the passenger and provide the boarding assistance using a lift or ramp if it would not delay the flight. (§ 382.99(d)).

When Level-Entry Boarding and Deplaning Is Not Required

When level-entry boarding and deplaning assistance is not required, you must still provide assistance to passengers with a disability in boarding and deplaning aircraft. (§ 382.101). For example, boarding and deplaning assistance using lifts is not required at smaller U.S. airports (that is, airports with less than 10,000 annual enplanements) or at any foreign airports; when severe weather or unexpected mechanical breakdowns prevent the use of a lift; or when you are using one of the unsuitable aircraft listed in the previous discussion. (§ 382.101(a), (b), (c), and (e)).

Boarding assistance must be provided by any available means to which the passenger consents. In such situations, you should present the various options available to the passenger. However, as discussed below, you must never physically hand-carry the passenger even if the passenger consents unless this is the only way to evacuate the passenger in the event of an emergency. (§ 382.101). If the passenger does not consent to the available means of boarding assistance, you should contact a Complaints Resolution Official (CRO).

Attending to Passengers in a Wheelchair

You may not leave a passenger unattended in a ground wheelchair, boarding wheelchair or other device in which the passenger is not independently mobile for more than 30 minutes. This requirement applies even

if another person, including a family member or personal care attendant, is accompanying the passenger unless the passenger explicitly consents. A person who is not independently mobile is a person who would not be able to get up from the wheelchair and maneuver to areas of the terminal such as the restroom or a food service provider without mobility assistance. (§ 382.103).

Except in an Emergency Evacuation, No Hand-Carrying of Passengers

Under no circumstance, except for emergency evacuations, should you hand-carry a passenger with a disability to provide boarding or deplaning assistance. Hand-carrying is defined as directly picking up the passenger's body in the arms of one or more carrier personnel to move the passenger from the tarmac level to the aircraft door for boarding or, vice versa, for deplaning. (§ 382.101).

Note: Transferring a passenger from a wheelchair to a boarding chair or a boarding chair to an aircraft seat is not considered hand-carrying a passenger, and is often required for passengers who are unable to conduct such transfers without assistance.

Example: A woman asks for assistance in boarding a flight with 30 passenger seats. General boarding for passengers is by a set of stairs on the tarmac. When she arrives at the gate and asks for boarding assistance, she is provided a boarding wheelchair, but you inform her that the mechanical lift is not working. The passenger tells you to physically pick her up and carry her up the stairs and onto the aircraft because she really needs to make the flight. What should you do?

Under the law, you must never physically hand-carry the passenger onto the aircraft. Hand-carrying is only appropriate in the case of an emergency evacuation. Even though the law states that a passenger with a disability must consent to the type of boarding assistance and she has requested to be hand carried, you must not hand-carry her onto the aircraft. Instead, you should contact a CRO for advice about options for alternative means of boarding the passenger. You and the CRO should explain to the passenger that, under the law, you are not permitted to physically hand-carry her onto the aircraft. In addition, you should explore other available options for assisting this passenger with boarding the aircraft, including carrying the passenger onto the aircraft in a boarding wheelchair or arranging for another flight with a working lift or a loading bridge. If the passenger consents to being carried onto the aircraft in the boarding wheelchair, you may do so. Regardless, you should notify the appropriate personnel that the mechanical lift is not functioning properly and arrange for repair as quickly as possible.

Connecting Assistance

If a passenger with a disability requests transportation between gates to make a connecting flight, you must provide, or ensure the provision of, such assistance. If the arriving flight and departing flight are operated by different carriers, the carrier that operated the arriving flight has this responsibility. (§ 382.91(a)). Chapter 4: Assisting Air Travelers with Disabilities at the Airport, has a more detailed discussion of the assistance a carrier must provide to passengers with a disability who are moving within the airport terminal.

Airport Operators at Foreign Airports—Boarding, Deplaning, and Connecting Assistance

At some foreign airports, the airport operators rather than the carriers are responsible for providing boarding, deplaning, or connecting assistance for passengers. If the airport operator provides this assistance rather than carriers, you, as a carrier, may rely on the services provided by the airport operator. However, if the boarding, deplaning, or connecting services the airport operator provides are not sufficient to meet Part 382, you must supplement those services to ensure the assistance requirements are met. If you believe you are not legally permitted to supplement the airport operator's services, you may apply for a conflict of laws waiver under § 382.9. (§ 382.105).

D. Stowing and Treatment of Assistive Devices

You should be familiar with the regulatory requirements for storage and treatment of assistive devices used by passengers with a disability, including ventilators and respirators; spillable and nonspillable batteries; canes; and wheelchairs. (Part 382, Subpart I).

Storing Mobility Aids and Other Assistive Devices in the Aircraft Cabin

You must allow passengers with a disability to bring the following mobility aids and assistive devices into the aircraft cabin consistent with FAA, PHMSA, Transportation Security Administration (TSA or applicable foreign government requirements concerning safety, security, and hazardous materials:

- Manual wheelchairs, including folding or collapsible wheelchairs;
- Other mobility aids, such as canes, crutches and walkers; and
- Other assistive devices, such as prescription medications and the devices needed to administer them (such as syringes or auto-injectors); vision-enhancing devices; and portable oxygen concentrators (POCs), ventilators, and respirators that use nonspillable batteries as long as they comply with applicable safety, security and hazardous materials rules. (§ 382.121(a)(1) through (a)(3)).

Note: Carriers are not required to permit passengers to bring electric wheelchairs, Segways, or scooters into the aircraft cabin.

You must not count mobility aids and other assistive devices brought on board the aircraft by a passenger with a disability toward your airline's limit for passenger carry-on baggage. (§ 382.121(b)). Wheelchairs and other assistive devices that cannot be stowed in the cabin must be stowed in the baggage compartment with priority over other cargo and baggage. (§ 382.125(a) and (b)). In addition, because carriers cannot charge for facilities, equipment, or services required under Part 382, no charges may be imposed for assistive devices brought into the cabin or checked or if a wheelchair or other assistive device exceeds the normal weight limit on checked baggage. (§ 382.31(a)).

Chapter 3: Assisting Air Travelers with Disabilities Planning a Trip, above, also discusses a carrier's obligations with regard to mobility aids and assistive devices.

Priority Stowage of Wheelchairs and Other Assistive Devices

A passenger with a disability who takes advantage of preboarding may stow his or her folding wheelchair in the aircraft's priority storage space (discussed above in Section A, *Aircraft Accessibility*) with priority over all other items. You must move items that carrier personnel have stowed in this area, including crewmember luggage and on-board wheelchairs, even if these items were stowed before the passenger boarded the aircraft. This includes items placed in this area on a previous leg of the flight. (§ 382.123(a)(1)). You must also allow passengers with a disability who preboard to stow other assistive devices in this area with priority over other items except wheelchairs.[16] (§ 382.123(a)(2)).

Passengers with wheelchairs or other assistive devices who do not preboard must still be allowed to use the priority stowage areas for their devices but their use of the space is on a first-come, first-serve basis with respect to other passengers' items. (§ 382.123(a)(3)).

If a passenger's wheelchair exceeds the dimensions of the priority storage space while folded but otherwise fully assembled but will fit if the wheels or other components are removed without the use of tools, you must remove those components and stow the wheelchair in

[16] A carrier might require FAA approval to stow assistive devices other than a wheelchair in the priority stowage space.

the priority space. You must store the removed components in the areas provided for carry-on luggage. (§ 382.123(b)).

Note: The rule currently prohibits the use of the ''seat-strapping'' method of carrying a wheelchair in any aircraft you ordered after May 13, 2009, or which is delivered after May 13, 2011. (§ 382.123(c)). There is currently DOT rulemaking pending regarding the use of the ''seat-strapping'' method and whether this practice should be permitted. (76 FR 32107) [17]

Mobility Aids and Other Assistive Devices That Cannot Be Stowed in the Aircraft Cabin

You must stow mobility aids, including wheelchairs, and other assistive devices in the baggage compartment with priority over other cargo and baggage if an approved stowage area is not available in the cabin or the items cannot be transported in the cabin consistent with FAA, PHMSA, TSA, or applicable foreign government requirements. (§ 382.125(a)). You need to transport only those items that fit into the baggage compartment and can be transported consistent with FAA, PHMSA, TSA, or applicable foreign government requirements on stowage of items in the baggage compartment. (§ 382.125(b)). DOT recognizes there may be some circumstances in which it is not practical to stow an electric wheelchair or some other assistive device in the baggage compartment, and you are not required to do so if it would constitute an undue burden. (§ 382.13(c)). For example, some larger scooters may not fit in smaller aircraft.

If other passengers' items are removed from the aircraft to accommodate assistive devices, you must use your best efforts to ensure that the items are delivered to the passenger's destination on your next flight. The ''next flight'' may be a flight within 1 or 2 hours for domestic destinations or a matter of days with respect to some international destinations. (§ 382.125(b)).

When a passenger's wheelchair, other mobility aids, or other assistive devices cannot be stowed in the cabin as carry-on baggage, you must ensure these items are timely checked and returned as close as possible to the door of the aircraft so that the passenger with a disability can use his or her own equipment, where possible, consistent with Federal regulations concerning transportation security and the transportation of hazardous materials. (§ 382.125(c)(1)). If, on the other hand, a passenger with a disability requests that these items be returned at the baggage claim area instead of at the door of the aircraft, you must do so. (§ 382.123(c)(2)). To ensure the timely return of a passenger's wheelchair, other mobility aids, or other assistive devices, they must be among the first items retrieved from the baggage compartment. (§ 382.125(d)).

Example: A passenger with multiple sclerosis is one of many passengers on a flight who is informed that the flight is cancelled because of mechanical problems. It is late at night and the carrier has announced that the passengers will be provided a hotel room for the night and rescheduled on a flight leaving the following morning. The passenger with multiple sclerosis approaches you when she hears the announcement and explains that she needs access to her checked luggage because it contains her syringes and medication for her multiple sclerosis, which she must take on a daily basis. What should you do?

The passenger's syringes and medication would be considered assistive devices. (§§ 382.3 and 382.121(a)(3)). Because the passenger requested the return of her assistive device, you must return it to her if no extenuating circumstances prohibit the return of the items, for example, the carrier placed the baggage on an earlier flight to the passenger's final destination. (§ 382.125(c)). As a matter of customer service, you may also advise such passengers (for example, through the carrier's Web site or other consumer information materials) that your carrier recommends to all of its passengers who require such medication or other items for medical necessity to bring a carry-on bag containing the medication or other items on board. Such medication carry-on bags would not be counted toward the passenger's carry-on baggage allowance.

Battery-Powered Mobility Aids

As a carrier, you must accept a passenger's battery-powered wheelchair or other similar mobility device, including the battery, as checked baggage unless baggage compartment size and aircraft airworthiness considerations prohibit it. (§ 382.127(a)).

Check-In and Advance Notice Requirements (for Passengers With Battery-Powered Mobility Devices)

Aircraft with 60 or more passenger seats. You may require that the passenger check in for the flight 1 hour before the check-in time for the general public. However, even if the passenger does not check in within this time, you must make a reasonable effort to accommodate the passenger and transport the battery-powered wheelchair or other similar mobility aid provided it would not delay the flight. (§ 382.127(b)).

Aircraft with fewer than 60 passenger seats. You may require a passenger with a disability to provide up to 48 hours' advance notice and check in 1 hour before the check-in time for the general public if the passenger wishes transportation of an electric (battery-powered) wheelchair. (§ 382.27(c)(4)).

Battery Handling (for Wheelchairs, Scooters, and Other Mobility Devices Using Traditional Spillable or Nonspillable Battery Technology) [18]

You must not require that the battery be removed and separately packaged if the—

- Manufacturer has labeled the battery on a wheelchair or other similar mobility device as nonspillable, or
- For a spillable battery, the battery-powered wheelchair can be loaded, stored, secured, and unloaded in an upright position.

However, you must remove and package separately any battery that (1) is inadequately secured to a wheelchair or (2) if the battery is spillable and it is contained in a wheelchair that cannot be loaded, stowed, secured and unloaded in an upright position consistent with DOT hazardous materials regulations. Whenever your carrier is required to remove and provide hazardous material packaging for a battery, your carrier may require a passenger to provide up to 48 hours' advance notice and check in 1 hour before the standard check-in time. (§ 382.27(c)(5)). A damaged or leaking battery should not be transported. (§ 382.127(c)).

Finally, you must not disconnect the battery on a wheelchair or other mobility device if the battery is nonspillable and it is completely enclosed within a case or compartment integral to the design of the device unless you are required to do so under FAA, PHMSA, or foreign government safety regulations. (§ 382.127(e)).

When it is necessary to detach a battery from a wheelchair or other

[17] Pursuant to JetBlue Airways' petition to stay the effectiveness of 14 CFR 382.67 and 14 CFR 382.123(c), the Office of the Assistant General Counsel for Aviation Enforcement and Proceedings will not enforce the requirement that aircraft ordered after May 13, 2009, or delivered after May 13, 2010, have a priority space in the cabin of sufficient size to stow a passenger's manual folding wheelchair as required by section 382.67 and will allow carriers to continue using seat-strapping, as permitted by the Federal Aviation Administration or, if applicable, foreign safety authorities, until the rulemaking process is complete. *See DOT–OST–2010–0115.*

[18] PHMSA has several rules that govern the carriage of battery-powered devices as checked baggage. 49 CFR 175.10(a)(15) regulates non-spillable battery powered devices as checked baggage; 49 CFR 175.10(a)(16) regulates spillable battery powered devices as checked baggage; and, 49 CFR 175.10(a)(17) regulates lithium ion battery powered devices as carry-on or checked baggage. See FN 18 below. Note that Part 382 never requires that carriers allow battery powered wheelchair in the cabin as carry-on baggage.

mobility device, you must provide packaging for the battery, if requested, and package the battery consistent with appropriate hazardous materials regulations. However, you are not required to use packaging materials or devices you do not normally use for this purpose. (§ 382.127(d)). You must not charge for such packaging. (§ 382.31(a)). You must not drain batteries. (§ 382.127(f)).

If the physical size of a cargo compartment does not permit you to safely carry a wheelchair, other mobility aid, or assistive device upright without the risk of serious damage to the wheelchair, aid, or device, or the carriage of such a mobility aid in a small baggage compartment causes a load imbalance that violates weight and balance safety requirements, you may legitimately decline transportation of the item on the flight. However, you should assist the passenger in identifying a flight using an aircraft that can accommodate the wheelchair, aid, or device.

Assembly and Disassembly of Wheelchairs, Mobility Aids, and Assistive Devices

You must permit passengers with a disability to provide written instructions concerning the disassembly and reassembly of their wheelchairs, other mobility aids and other assistive devices. (§ 382.129(a)). When you disassemble these items, you must reassemble them and ensure their prompt return to the passenger with a disability. In addition, you must return a wheelchair, other mobility aid or other assistive device to the passenger in the same condition in which you received it. (§ 382.129(b)).

Passenger-Supplied Electronic Respiratory Assistive Devices

U.S. carriers conducting passenger service (except for on-demand air taxi operators)

You must permit a passenger with a disability to use the following passenger-supplied electronic respiratory assistive devices in the passenger cabin *during all phases of flight* on all aircraft designed with a maximum passenger seating capacity of more than 19 seats:

- Ventilators;
- Respirators;
- Continuous positive airway pressure (CPAP) machines; and
- FAA-approved POCs.

You must allow such devices to be used in the cabin during air transportation if they—

- Meet applicable FAA requirements for medical portable electronic devices,
- Display a manufacturer's label indicating such compliance (see Note on labeling below), and
- The device can be stowed and used in the cabin consistent with applicable TSA, FAA, and PHMSA regulations. (§ 382.133(a)(1) and (a)(2)) [19]

Carrier personnel should inspect the device's label at the departure gate to ensure the device is labeled properly and that the passenger has an adequate number of batteries (that is, 150 percent of the maximum expected duration of the flight) for the flight and that they are properly packaged.)

Foreign Carriers Conducting Passenger Service (Except Operations Equivalent to a U.S. Carrier On-Demand Air Taxi Operation

You must permit passengers with a disability to use the electronic respiratory assistive devices listed above (ventilator, respirator, CPAP machine, or POC of a kind equivalent to an FAA-approved POC for U.S. carriers) during flight in the passenger cabin of aircraft, originally designed with a maximum passenger seating capacity of more than 19 seats during operations to, from or within the United States. However, this requirement does not apply to foreign operations that are equivalent to on-demand air taxi operations by U.S. carriers. (§ 382.133(b)).

You must permit the use of such devices if they—

- Meet requirements for medical portable electronic devices established by your foreign government (or if no such requirements exist you may apply applicable FAA requirements for U.S. carriers),
- Have a manufacturer's label indicating such compliance (see Note on labeling below), and
- The device can be stowed and used in the cabin consistent with TSA, FAA and PHMSA regulations and the safety and security regulations of your foreign government. (§ 382.133(b)(1) through (b)(3)).

Carrier personnel should inspect the device's label at the departure gate to ensure the device is labeled properly and that the passenger has an adequate number of batteries for the flight and that they are properly packaged.[20]

Note: Since the issuance of revised Part 382 on May 13, 2008, some carriers have denied passengers the use of POCs onboard the aircraft because the devices did not have a manufacturer's label indicating that the device complies with the standards of RTCA/DO–160 or other applicable FAA or foreign requirements for portable medical electronic devices, even though the POC has been approved by the FAA for in-flight use. The DOT strongly encourages carriers to allow passengers to use any such FAA-approved POC if the conditions in Special Federal Aviation Regulation No. 106 (SFAR 106) for use of portable oxygen concentrator systems onboard aircraft are followed even if the device has not been labeled.[21] (See DOT Notice on this issue at *http://airconsumer.ost.dot.gov/rules/Notice_10_28_09.pdf*). Under SFAR 106, the FAA reviews the tests of POCs and determines whether the POCs meet safety requirements for medical portable electronic devices and are safe for use in-flight subject to certain conditions. The FAA specifically lists any POC brands and models that it deems acceptable for use onboard aircraft in SFAR 106. (14 CFR part 121, SFAR 106). (A list of FAA-approved POCs can be found on the FAA's Web site at *http://www.faa.gov/about/initiatives/cabin_safety/portable_oxygen/*).

Chapter 3, Assisting Air Travelers with Disabilities Planning a Trip, also discusses passenger-supplied electronic respiratory assistive devices. Specifically, Chapter 3 discusses the information a carrier must provide during the reservation process to passengers with a disability who wish to use such devices during a flight and the conditions a passenger must meet to bring the device on the aircraft.

Baggage Liability Limits

On domestic U.S. flights the baggage liability limits (14 CFR Part 254, Domestic Baggage Liability Limits), do

[19] For applicable PHMSA regulations regarding ''portable electronic devices'' that use cells or batteries, see 49 CFR 175.10(a)(18). This rule is not specific to disability assistive devices. DOT recognizes that the International Civil Aviation Organization (ICAO) states that portable medical electronic devices containing lithium metal or lithium-ion batteries may be carried by passengers for medical use but ''no more than two spare batteries may be carried in carry-on baggage.'' DOT's Pipeline and Hazardous Material Safety Administration (PHMSA) rule currently does not contain a limit on the number of lithium metal or lithium-ion batteries that may be carried by passengers for medical use. Therefore, DOT currently require carriers through its disability regulation to allow a passenger to transport in carry-on baggage as many spare lithium metal or lithium-ion batteries as needed for medical use subject to the gram content restrictions stated in the PHMSA regulation cited above. U.S. and foreign carriers are obligated to comply with the current PHMSA regulation unless a conflict of law request has been filed and approved by DOT.

[20] In regards to lithium ion battery-powered respiratory devices, PHMSA has no prohibition or limitation on the number of batteries a passenger is allowed to carry on to power their respiratory device. PHMSA's rules differ from the ICAO standards which permit only two extra batteries. As PHMSA has not adopted the same rule, U.S. carriers are obligated to allow a passenger to bring the lithium-ion batteries on-board as long as they are packaged according to PHMSA standards. Foreign carriers are also obligated to carry the lithium-ion batteries unless there is a conflict of law.

[21] The Use of Passenger-Supplied Electronic Respiratory Assistive Device on Aircraft, October 28, 2009. See *http://airconsumer.dot.gov/rules/notice_10_28_09.pdf*. The notice also covers other electronic respiratory assistive devices.

not apply to loss, damage, or delay concerning wheelchairs, other mobility aids, or other assistive devices. Rather, the basis for calculating the compensation for lost, damaged, or delayed mobility aids, including wheelchairs, or other assistive devices must be the original purchase price of the device. (§ 382.131).

Note: Baggage liability limits for international travel, including flights of U.S. carriers, are governed by the Montreal Convention and other international agreements instead of 14 CFR part 254.

You also must not require a passenger with a disability to sign a waiver of liability for damage to or loss of a wheelchair or other assistive device, although you may make notes about preexisting damage or the condition of these items to the same extent you do this for other checked baggage. (§ 382.35(b)).

Example: A passenger with a battery-powered wheelchair with a spillable battery arrived for his domestic flight and carrier personnel determined that the wheelchair could not be loaded, stored, secured, and unloaded in an upright position in the cargo compartment of the aircraft. Therefore, the appropriate personnel removed the battery and stored the battery and wheelchair as checked baggage. When the passenger arrives at his destination and the battery is reconnected, it is done incorrectly and the entire electronic circuit board of the wheelchair is severely damaged, rendering the wheelchair temporarily unusable. What should you do?

As a matter of good customer service, you should apologize to the passenger for the problem and the resulting inconvenience. In addition, you should explain to the passenger that the carrier will compensate him for the damaged wheelchair in an amount based on the original purchase price of the device. If, for example, the passenger provides you with documentation that the original cost of the wheelchair was $10,000 and verification that it cost $2,900 to be repaired, the carrier would pay the passenger or the repair company $2,900 to cover the cost of the wheelchair repair. Repair costs in excess of the original cost of the wheelchair need not be paid. The passenger could also recover from the carrier reasonable costs associated with the rental of a wheelchair during the repair period or while awaiting a new wheelchair.

E. Services and Information Provided in the Cabin

Services on Aircraft

You must provide certain services within the aircraft cabin when requested by a passenger with a disability or when offered to and accepted by a passenger with a disability. Specifically, you must provide assistance:

- Moving to and from a seat as part of boarding and deplaning;
- Preparing for eating, such as opening packets and identifying food;
- If there is an on-board wheelchair, using the on-board wheelchair to enable the passenger to move to and from the lavatory (if requested, this could involve transferring the passenger from a seat to an aisle chair);
- Moving a passenger who is semi-ambulatory to and from the lavatory, without lifting or carrying the individual;
- Ensuring effective communication with passengers with vision or hearing impairments so that these passengers have timely access to information you provide to other passengers, such as information about weather, on-board services, flight delays, and connecting gates at the next airport; and
- Stowing and retrieving carry-on items, including mobility aids and other assistive devices stowed in the cabin (a passenger must self-identify as an individual with a disability needing such assistance). (§ 382.111).

Example 1: A passenger using an aisle chair for boarding asks for help storing her carry-on item in the overhead compartment because, as is apparent, her disability prevents her from being able to reach up to the overhead compartment. What should you do?

You must either assist the passenger directly or indicate that you will find the appropriate employee to assist her in stowing her carry-on bag in the overhead compartment.

Example 2: A passenger who walks onto the plane for an evening flight with a rolling carry-on bag asks for help lifting his bag and putting it in the overhead storage compartment. What should you do?

Because he has not identified himself as, and it is not obvious that he is, a passenger with a disability, you may want to ask for further clarification. Because, under the law, normally you cannot ask a passenger if he has a disability, you might ask, ''Is there any particular reason you need assistance sir?'' or ''Are you unable to lift it yourself?'' If, for example, the passenger explains that he has multiple sclerosis and his muscles are particularly fatigued at the end of the day and, therefore, he needs help lifting things, you must either assist the passenger directly or indicate that you will find the appropriate employee to assist him in stowing his carry-on bag. If, on the other hand, the passenger states that he is merely tired and does not feel like lifting the bag, he may be considered not to be a passenger with a disability and, therefore, you are not obligated to assist him. You may politely decline to assist him, depending on your carrier's policies regarding assistance with stowing carry-on items for passengers.

You are *not* required to provide extensive special assistance to passengers with a disability such as:

- Help with actual eating, for example, feeding the passenger;
- Assistance within the restroom or at the passenger's seat with elimination functions; or
- Provision of medical services.

(§ 382.113(a) through (c)).

You cannot require that a passenger with a disability sit on a blanket or wear badges or other special identification. (§ 382.33(b)(3) and (b)(4)).

Timely and Complete Access to Information for Passengers With a Vision or Hearing Impairment

You must ensure that passengers with a disability who identify themselves as needing visual or hearing assistance have *prompt* access to the same information provided to other passengers on the aircraft. In this context, ''prompt'' means that you must provide this information to passengers with vision or hearing impairments as close as possible to the time the information is transmitted to the other passengers. However, you are not required to provide information if it would interfere with your crewmember safety duties under applicable FAA and foreign regulations. (§ 382.119(a)).

You must provide information on—

- Flight safety,
- Procedures for takeoff and landing,
- Flight delays,
- Schedule or aircraft changes that affect the travel of passengers with a disability,
- Diversion to a different airport,
- Scheduled departure and arrival time,
- Boarding information,
- Weather conditions at the flight's destination,
- Beverage and menu information,
- Connecting gate assignments,
- Baggage claim,
- Individuals being paged, and
- Emergencies (for example, fire or bomb threat).

(§ 382.119(b)).

You may need to provide passengers with information not included on this list. In addition, if you use audio-visual displays to convey this information to passengers with hearing impairments you must provide high-contrast captioning as previously discussed in Section A, Aircraft Accessibility, of this chapter. (§ 382.69).

F. Safety Briefings

The FAA requires that you provide a safety briefing to all passengers before each takeoff. (§§ 121.571 and 135.117). With regard to passengers with a disability you must not require that the passenger demonstrate he or she has listened to, read, or understood the information presented, except to the extent that you impose such a requirement on all passengers with

respect to the general safety briefing or for an exit row briefing. In addition, you must not take any action adverse to a passenger with a disability on the basis the individual has not ''accepted'' the briefing. (§ 382.115(c)).

Individual Safety Briefings

Under certain circumstances, you must provide individual safety briefings to a passenger with a disability. (§ 382.115(a)). FAA regulations require you to conduct an individual briefing for each passenger who may need assistance to move expeditiously to an emergency exit. (§§ 121.571(a)(3) and (4) and 135.117(b)). You must brief the passenger and the attendant, if any, on the routes to the appropriate exit and on the most appropriate time to move toward the exit in the event of an emergency. In addition, you must ask the passenger and the attendant, if any, the most appropriate manner of assisting the passenger. You may offer an individual briefing to any other passenger. (§ 382.115(b)). When you conduct an individual safety briefing for a passenger with a disability, you must do so as inconspicuously and discreetly as possible. (§ 382.115(d)).

Safety Briefings for Passengers With Hearing Impairments

If you present safety briefings to passengers using audio-visual displays, you must ensure that the presentation is accessible to passengers with hearing impairments. (§ 382.115(e)). The accessibility requirements for onboard audio-visual safety presentations are discussed in Section A, Aircraft Accessibility of this chapter. (§ 382.69).

Chapter 6: Assisting Air Travelers With Disabilities With Their Complaints

A. Complaints Resolution Officials (CROs)
B. Handling Passenger Complaints
C. ACCESS: An Approach for Resolving Complaints
D. General Complaint Resolution Tips
E. Categorizing, Recording and Reporting Written Disability-Related Complaints

A. Complaints Resolution Officials (CROs)

Carriers providing service using aircraft with 19 or more passenger seats must designate one or more CROs. (§ 382.151(a)). CROs are individuals trained as the carrier's experts in ensuring that carrier personnel correctly implement the Air Carrier Access Act (ACAA) requirements and Part 382. Each CRO must be trained and thoroughly familiar with (1) the rights of passengers with disabilities under Part 382 and (2) the carrier's procedures with respect to passengers with a disability. The primary purpose of having a CRO is to resolve a passenger's problem as quickly as possible without using formal Department of Transportation (DOT) enforcement procedures and before a violation occurs.

(§§ 382.141(a)(7) and 382.151(d)).

A CRO must have the authority to resolve complaints by passengers with a disability on behalf of the carrier. Therefore, CROs must have the power to overrule decisions of other carrier personnel, except that they are not required to have the authority to countermand a safety decision made by the pilot-in-command. (§ 382.151(e)).

Availability of the CRO

As a U.S. carrier, you must make a CRO available at each airport you serve during all times you are operating at that airport. As a foreign carrier, you must make a CRO available either in person or by telephone or Text Telephones (TTY) at each airport serving flights you operate that begin or end at a U.S. airport. Part 382 recognizes that, in some cases, carriers operate flights infrequently and it is not necessary to have a CRO available during those times the carrier is not operating flights at that airport. (§ 382.151(b)).

Example: A foreign carrier may fly from Dulles International Airport to a foreign airport only at 5 p.m. on Mondays and Thursdays. On other days and on Monday and Thursday mornings, the foreign carrier would not have to make a CRO available at Dulles.

If the CRO is available by telephone, it must be at no cost to the passenger. In addition, if a telephone link to the CRO is used, a TTY service or a similarly effective technology must be available to passengers with hearing impairments. You must ensure that CRO services are available in the languages in which you provide services to the general public. (§ 382.151(b)).

B. Handling Passenger Complaints

If a passenger with a disability, or someone on behalf of a passenger with a disability, complains or raises a concern with you about discrimination, accommodations, or services with respect to passengers with a disability, and you do not immediately resolve the issue to the customer's satisfaction or provide a requested accommodation, you must immediately inform the passenger of the right to contact a CRO. You must then contact a CRO on the passenger's behalf or provide the passenger with the means to contact the CRO such as by providing a telephone, a phone card plus the location and/or phone number of the CRO. The requirement to provide this information applies to your carrier's reservation agents, contractors, and Web sites when a passenger with a disability using those services complains or raises a concern about a disability related issue. (§ 382.151(c)). Carriers are responsible for making a passenger aware of the availability of a CRO anytime a disability-related concern is raised even if a passenger does not specifically ask to speak with a CRO.

Example: A passenger with a disability states that he wishes to carry-on and stow his personal folding wheelchair in the cabin as he has done on several similar flights on your carrier in the same market and on the same aircraft type. As the ticket agent, you inform the passenger that you are unsure if wheelchairs can be stowed in the cabin, but state ''We have a CRO available that will be able to provide guidance. The CRO is our carrier's expert in disability related questions or concerns.''

Complaints Made Directly to a CRO During the Trip

When a passenger with a disability makes a complaint directly to a CRO during the course of the trip (for example, over the telephone or in person at an airport), the CRO must promptly take action to resolve the problem as follows:

- If a passenger complains about a disability-related issue to a CRO *before* Part 382 has been violated, the CRO must promptly take action or direct other employees to take action to ensure compliance with the law. (§ 382.153(a)). However, as previously discussed, only the pilot-in-command of an aircraft has final authority to make decisions regarding safety onboard his or her aircraft and the CRO may not have the authority to override a pilot's decisions regarding safety. (§ 382.151(e)) .
- If a passenger complains about a disability-related issue or alleges that a violation of Part 382 already has occurred and the CRO agrees that a violation has occurred, the CRO must provide the complaining passenger with a written statement summarizing the facts and the steps, if any, the carrier proposes to take in response to the violation. (§ 382.153(b)). Note, some carriers use their legal department to provide a written response.
- If a passenger alleges a violation of Part 382 but the CRO determines that no violation has occurred, the CRO still must provide a written statement including a summary of the facts and the reasons for that determination. (§ 382.153(c)).

Note: In both instances discussed above, the written statement responding to the passenger's complaint must either be provided in person to the passenger at the airport or it must be forwarded to the passenger within 30 calendar days of the complaint. The written statement must

inform the complaining passenger about his or her right to pursue DOT enforcement action under Part 382. (§ 382.153(d)).

Written Complaints Received After the Trip

Generally, as a carrier, you must respond to written complaints from passengers with a disability. Written complaints may be received by letter, facsimile, email, electronic instant messaging, and short message service (SMS) via the Internet. (§ 382.155(a)). In regards to complaints received through Facebook and Twitter, in the context of consumer complaints, the Department allows carriers to not respond to those complaints provided the carrier clearly indicates on the its primary page on Facebook and/or Twitter that it will not reply to consumer complaints on that site and directs the consumer to the carrier's mailing address and email or Web site location for filing written complaints. The Enforcement Office will adopt this policy for disability-related complaints as well. However, you are not required to respond to a written complaint postmarked or transmitted more than 45 days after the date of the incident, except complaints referred to you by DOT. (§ 382.155(c)).

You must provide your response in writing to the complaining passenger within 30 days of receiving his or her written complaint. Your response must describe how you resolved the complaint and must specifically admit or deny that a violation of Part 382 occurred. (§ 382.155(d)). As a matter of good customer service, you should provide all information regarding written complaints in a polite and respectful manner.

Depending on your carrier's determination, the response to a written complaint must include the following:

- If your carrier agrees that a violation has occurred, you must provide a written statement to the complaining passenger summarizing the facts and stating what steps, if any, your carrier proposes to take in response to the violation. (§ 382.155(d)(1)).
- If your carrier denies a violation occurred, the written response must include a summary of the facts and your carrier's reasons under Part 382 for making the determination. (§ 382.155(d)(2)).

Note: As with the response to oral complaints, the response to a written complaint must inform the complaining passenger about his or her right to pursue DOT enforcement action under the law. (§ 382.155(d)(3)).

Responsibilities of Employees/Contractors Other Than the CRO

Each employee/contractor dealing with the traveling public should be trained to proficiency, as appropriate to the duties of the employee/contractor, on the legal requirements and the carrier's policies concerning the provision of air travel to passengers with disabilities. (§ 382.141). These employees/contractors must receive training on awareness about and appropriate responses to individuals with physical, sensory, mental, and emotional disabilities, including how to distinguish among the differing abilities of individuals with a disability. (§ 382.141(a)(2)). A discussion of employee/contractor training requirements can be found in Chapter 8: Personnel Training; and Appendix II on Airline Management Related Issues.

You should be familiar with your carrier's established procedures and the CRO's duties and responsibilities with respect to resolving a complaint raised by a passenger with a disability. You should convey this information to passengers with a disability under the appropriate circumstances.

When resolving complaints from a passenger with a disability, you should:

- Request assistance from a CRO immediately or assist the passenger with a disability in doing so, if the passenger requests to speak with a ''supervisor'' or ''manager'' about a disability-related issue.
- Contact a CRO if you are having *any* difficulty providing an accommodation required by Part 382 or carrier policy to a passenger with a disability.
- Carry the information about how to contact a CRO with you at all times. Remember, a U.S. carrier must make a CRO available, in person or by telephone, at each airport the carrier serves during all times the carrier is operating at that airport. A foreign carrier must make a CRO available, in person or by telephone, at each airport serving flights the carrier operates that begin or end at a U.S. airport. (§ 382.151(b)).

C. ACCESS: An Approach for Resolving Complaints

When you receive a complaint from a passenger with a disability, there are certain requirements under the law with which you, your carrier, and a CRO must comply. Even if you call a CRO, it is important to be able to assess the situation firsthand through observation, communication, and information gathering because a CRO is not always available onsite and may only be involved in resolving the complaint by telephone.

Having a consistent process for handling these complaints will assist you in meeting your legal obligations and providing good customer service. Learning what the particular problem is, finding the applicable rule, regulation, or policy that addresses the situation, and remedying the situation by taking positive action are important aspects of the process.

The ACCESS [22] checklist below is provided as a memory aid for responding to these complaints. Remember ACCESS as a thorough and useful process through which you can address the complaint or refer it to a CRO as needed.

BILLING CODE 4910–9X–P

[22] ACCESS is a memory aid to Ask, Call, Check, Evaluate, Solve, and Satisfy for use when resolving complaints.

ACCESS

Ask the passenger with a disability how you may assist with his or her concerns. Listen actively and carefully to what the passenger tells you and ask for further clarification when necessary.

Call a CRO and report the complaint if you are unable to immediately resolve the problem. (§ 382.151(c)) If a passenger with a disability would like to contact a CRO directly, you must assist the passenger in doing so. If your carrier has an internal procedure for documenting complaints that requires CRO involvement or other types of passenger complaints, complete the appropriate forms, if any, and provide relevant and detailed information to satisfy that internal carrier policy.

Check this manual, the full text of Part 382 at *http://airconsumer.dot.gov*, and your carrier's policies concerning the law, as well as policies for providing good customer service, to identify the issue at hand. If you need assistance, ask the CRO on duty.

Evaluate the relevant provisions of this manual, the full text of Part 382 at *http://airconsumer.dot.gov*, and your carrier's policies to determine the appropriate options for resolving the problem considering the following factors:

- Does the solution comply with the law?
- Does the solution comply with your carrier's policies?
- Is there a question of carrier or passenger safety? (Remember, the pilot-in-command is the final authority on a safety issue onboard his or her aircraft.)
- Does the solution meet the needs of the passenger with a disability?
- Can the solution be implemented in a timely manner, for example, to help the passenger with a disability make the flight or receive the accommodation?

Solve the problem by providing the passenger with a disability with the information, services, or appropriate action required under the Part 382.

Satisfy the passenger with a disability to the extent possible when complying with Part 382. Communicating the basis for the action taken (or not taken) to the passenger with a disability is critical. Thank the passenger for bringing the problem to your attention and ask if the passenger has any additional questions about the solution you or the CRO has provided. Ask if you are able to assist with any other concerns.

D. General Complaint Resolution Tips

To ensure that you can appropriately resolve a complaint from a passenger with a disability, you should:

- Familiarize yourself with this manual, the full text of Part 382 at *http://airconsumer.ost.dot.gov/SA_Disability.htm*, and your carrier's policies concerning Part 382, and for providing good customer service. Primarily, you must not violate the civil rights of passengers with a disability. In addition, you should treat passengers in

a manner consistent with good customer service.

- Work as quickly as possible to ensure prompt service and, at the same time, respect the needs of passengers with a disability.
- Be aware of your carrier's procedures for addressing complaints. You should take the time necessary to resolve the complaint while maintaining flight schedules. If an unfamiliar situation presents itself or you have any doubts or questions, you should contact your immediate supervisor or a CRO for prompt resolution of the issue.
- Make reasonable attempts to keep the passenger with a disability informed about your or other carrier personnel's progress with respect to resolving a complaint.
- Do not argue with a passenger with a disability who presents a complaint.
- Listen carefully and actively, evaluate appropriate options under Part 382 and your carrier's policy, and communicate the basis for the action taken (or not taken) to the passenger with a disability in a respectful and polite manner to ensure effective complaint resolution.
- Assess the situation firsthand through observation, communication, and information gathering even if you call a CRO, because a CRO is not always available on site and may only be involved in resolving the complaint by telephone.

E. Categorizing, Recording, and Reporting Written Disability-Related Complaints

As a carrier covered by Part 382 that conducts passenger operations with at least one aircraft having a designated seating capacity of more than 60 passengers on flights to, from, or in the United States, you must categorize, record, and report annually to the DOT written disability-related complaints you receive. (§ 382.157). This requirement applies to foreign carriers only with respect to disability-related complaints associated with any flight segment beginning or ending in the United States. (§ 382.157(b)).

As a carrier, you must have a system for categorizing and recording disability-related complaints by the passenger's type of disability and the nature of the passenger's complaint. (§ 382.157(c)) In addition, you must submit an annual report on the last Monday of January of every year summarizing the disability-related complaints you received during the previous year. This annual report must be submitted online using the form specified at the Web site address *http://382reporting.ost.dot.gov* unless you demonstrate undue hardship if not permitted to submit the information via paper copies, disks or email. (§ 382.157(d)). If DOT approves your request not to submit the annual report through the Web site address above, you must use the form in Appendix A to Part 382. (§ 382.157(h)).

Note: The recording and reporting responsibilities discussed above apply to carriers in a codeshare relationship. As carrier in such a relationship, you must record and report disability-related complaints concerning services you provide. In addition, you must forward to your codeshare partner any disability-related complaints you receive from or on behalf of passengers regarding difficulties encountered in connection with service provided by your codesharing partner. As a codeshare carrier, you must report disability-related complaints even when you are unable to reach agreement with your codeshare partner as to whether the complaint involves service you provide or service your codeshare partner provides.

Each carrier, including those carriers in a codeshare relationship, must record and report disability-related complaints forwarded to it by another carrier or governmental agency with respect to difficulties encountered in connection with services you provide. (§ 382.157(f)(1) and (f)(2), and (g)).

Finally, each carrier must retain correspondence and records of action on all disability-related complaints for 3 years after receiving the complaint or creating the record of action. You must make these records available to the DOT on request. (§ 382.157(e)).

Chapter 7: Interacting With Individuals With Disabilities

A. Terminology
B. Physical, Mental, and Psychological Impairments
C. Tips for Interacting With Individuals With Disabilities

A. Terminology

When assisting and interacting with individuals with disabilities, you should use language that reflects a positive view of them. You should focus on the person first, not the disability, and avoid language that reinforces myths, stereotypes, and discrimination.

This chart lists some currently acceptable terminology and terminology you should avoid when addressing or referring to an individual with a disability.

Use	Avoid
Person with a disability	Handicapped or deformed.
Person with a hearing impairment	The deaf.
Person with a vision impairment	The blind; the visually-impaired.
Person with an emotional disorder, psychiatric illness, or psychiatric disability.	Crazy, demented, lunatic, psycho, or maniac.
Person using a wheelchair, wheelchair user	Confined to a wheelchair, wheelchair bound, or crippled.
Person with acquired immune deficiency syndrome (AIDS) or living with AIDS.	Afflicted with AIDS, victim of AIDS, or suffers from AIDS.
Congenital disability	Birth defect.
Person with cerebral palsy	Afflicted with cerebral palsy or suffers from cerebral palsy.
Person with Down syndrome	Mongol, mongoloid, or retarded.
Person with a head injury, brain damage, or traumatic brain injury	Brain damaged.
Person with a speech disorder or who is without speech	Mute or dumb.
Person with quadriplegia or who is paralyzed	Crippled.
Person of small or short stature	Midget.

B. Physical, Mental, and Psychological Impairments

It may not be apparent whether a person is an individual with a disability. You should provide an opportunity for an individual with a disability to self-identify by asking if the individual needs assistance and, if so, how best you can assist with those needs. Be mindful that you cannot require an individual with a disability to accept special services, including preboarding. (§ 382.11(a)(2)). Below are examples of physical, mental, and psychological impairments.

Examples of Physical Impairments

- Orthopedic impairment;
- Deafness (profound hearing loss);

- Hard of hearing (mild to profound hearing loss);
- Vision impairment and blindness;
- Speech disorder;
- Cerebral palsy;
- Epilepsy;
- Muscular dystrophy;
- Multiple sclerosis;
- Cancer;
- Heart disease;
- Diabetes; and
- Human Immunodeficiency Virus (HIV).

(§ 382.3).

Examples of Mental or Psychological Impairments

- Mental retardation;
- Organic brain syndrome;
- Emotional or mental illness; and
- Specific learning disabilities.

(§ 382.3).

C. Tips for Interacting With Individuals With Disabilities

The first section below provides general tips for interacting with an individual with a disability. This section is followed by tips for interacting with individuals with one or more of a provided list of examples of disabilities.

This information will help you provide services, facilities, and other accommodations to passengers with disabilities in a respectful and helpful manner. Some of the tips relate to specific requirements under Part 382, but most suggest ways to interact with passengers with disabilities that would constitute good customer service and demonstrate an appropriate level of sensitivity. However, carriers should be aware that § 382.141(a)(3) requires carriers to train employees who deal with the traveling public to recognize requests for communication accommodations from individuals with vision or hearing impairments and to use the most common, readily available methods for communicating with these individuals such as writing notes and clearly enunciating. The tips below should be read and followed with the above qualification in mind.

General Tips for Interacting With Individuals With Disabilities

- *Always ask.* The most effective and simplest step for you to take when you are uncertain about a passenger's needs is to ask, ''How may I best assist you?'' or ''Please let me know how I can assist you.'' A passenger with a disability has the most information about his or her abilities, level of familiarity with the airport and airline, and traveling needs.
- *Appreciate the passenger's perspective.* You should take into consideration the extra time and energy that traveling may require for a person with a disability. For example, you should realize that a person with a disability may not have the flexibility and spontaneity to react to unexpected situations. Understand that making adjustments may take more time or may require additional attention or services for passengers with a disability.
- *Be yourself and be self-aware.* When you are speaking with an individual with a disability it is important to relax, be yourself, and maintain the conversational style you would use for anyone else. Be aware of the possibility that your body language could convey discomfort or impatience; try to avoid this. Also, you should respect the privacy of individuals with disabilities. Asking about a person's disability can be perceived as intrusive and insensitive. It might be interpreted as placing the disability above the human being.
- *Do not make assumptions.* Do not assume that all individuals with a disability automatically need assistance. Keep in mind that if the setting is accessible, individuals with a disability would usually prefer to operate independently.
- *Emotions matter.* Acknowledge the emotions of the person in a stressful situation, for example, frustration or disappointment. When acknowledging the emotions of others, it may be more effective to use ''you'' rather than ''I.'' For example, you should say, ''*You* must be frustrated by having to wait for your checked wheelchair'' rather than, ''*I* completely understand how you feel, *I* had to wait forever at a supermarket check-out yesterday.''
- *Focus on the person, not the disability.* The emphasis is on the individual first, not the disability.
- *Keep the passenger informed.* When providing an accommodation to a passenger with a disability, update the passenger about the progress or timing in connection with the accommodation.
- *Knowledge is useful.* Be aware of the services, information, and resources available to an individual with a disability who asks about a particular accommodation. If you do not know the answer to the question, treat the individual with respect and courtesy and say, ''Let me find out for you.'' Do not guess about what accommodations or services to provide an individual with a disability. When explaining the requirements under Part 382, avoid giving legal advice or counseling the person in any way.
- *The passenger is the expert.* Offer assistance only if the passenger appears to need help. If the passenger asks for help, ask how you can assist and listen to the passenger's response and instructions before you act. If you have any doubts as to how to assist a passenger with a disability, you should ask the passenger for guidance before acting. Avoid being overly enthusiastic about helping and always think before you speak and act when offering assistance.
- *Respect personal space.* Be sensitive about physical contact. Avoid patting an individual with a disability or touching the individual's wheelchair or cane. Individuals with disabilities consider their assistive devices to be part of their personal space.
- *Speak directly to the passenger.* Always make eye contact and speak directly to an individual with a disability, not the individual's companion, attendant, or interpreter.
- *Treat each passenger as an individual.* It is important to recognize that individuals with a disability may vary in their ability to perform certain tasks. Individuals with a disability are best able to assess and gauge what they can and cannot do in a particular situation.

It is always important to keep these tips in mind when assisting and communicating with passengers with disabilities. Although as a practical matter, you need to be aware of different considerations depending on the passenger's type of disability.

Five Examples of Types of Disabilities

Below are five basic types of disabilities with a list of considerations to keep in mind when you are communicating and accommodating passengers with each type of disability. Although these five types of disabilities are specifically discussed, you must consider each passenger with a disability as an individual with individual needs. It is important for you to communicate with each passenger about that particular passenger's needs under the circumstances and avoid making assumptions about the passenger's needs.

Five examples of types of disabilities addressed below are—

- Vision impairments;
- Hearing or severe hearing and vision impairments;
- Mobility disabilities;
- Difficulty speaking; and
- Disabilities that are not apparent (for example, a cognitive or emotional disability, diabetes, etc.).

Tips for Assisting Individuals With Vision Impairments

Communication

• Only offer assistance if it seems appropriate. Ask the person if you can be of assistance and, if so, how you can help.

• Identify yourself by name and job responsibility first.

• Always communicate using words rather than relying on gestures, facial expressions, or other nonverbal communication. For example, tell the passenger the gate number and the directions to the gate. If you are handing a boarding pass to a passenger with a vision impairment, explain that you have the person's boarding pass and that you would like to place it directly in the person's hand. Always communicate in words that describe what you are doing (for example, waiting to receive confirmation of a reservation), and identify any items you are giving to the passenger (for example, a credit card, ticket, or voucher).

• Make sure a passenger with a vision impairment is made aware of all relevant information as it becomes available to other passengers. (§ 382.53 and 382.119). For example, if a boarding time is changed and the new boarding time is posted visually at the gate, you must inform the person orally. You should advise the passenger when you are leaving the area and answer any questions the person has before you leave.

• If individual safety briefings are required, you must conduct them discreetly with respect for the privacy of an individual with a vision impairment. (§ 382.115(d)).

• If a person uses a term relating to vision impairments that you are not familiar with or that you do not understand, ask the individual what his or her needs are. If you need additional information, you should contact the Complaints Resolution Official (CRO) to discuss how best to proceed. Be aware that your carrier may provide additional training to educate you about the different types of disabilities to enhance your ability to accommodate passengers with disabilities.

• Keep in mind that the special service request (SSR) field of the passenger name record (PNR) may contain information concerning a passenger who is visually impaired.

Guiding an Individual

• Never take the arm of an individual with a vision impairment without asking first. In addition to the fact that the passenger might not need or want assistance, grabbing the passenger's arm could cause the passenger to lose his or her balance. Also, if you do not ask whether the passenger needs assistance, the passenger could perceive your forcing assistance upon him or her as a lack of respect because you did not give that passenger the option of receiving or declining the assistance. Once you ask if you can offer your arm, let the person take it. You may direct the individual's arm to a railing or the back of a chair to assist with seating.

• Walk approximately a half step ahead of the person if you are serving as a guide through the terminal. Inform a person with a vision impairment about any approaching obstacles, such as escalators, moving walkways, or revolving doors, and alternative routing to avoid these obstacles if the person desires. For example, when approaching a moving walkway you might say, ''We are approaching a moving walkway; it is approximately 50 feet in front of us. If you would like we can use the moving walkway or avoid the walkway. Which would you prefer?'' Never assume that a person with a vision impairment cannot use these devices because of his or her disability. Instead, offer the individual the freedom and flexibility to choose which devices and facilities he or she would like to use. Describe the environment in detail as you proceed and ask the person if he or she would like you to point out airport amenities such as restaurants, shops, automated teller machines, restrooms, airline club lounges, displays, or other terminal facilities. Note any obstacles and their location in your path. If you need to provide a warning, be as specific as possible. Offer to orient the person to the gate or other terminal area in case he or she would like to walk around. For example, you could say, ''All even numbered gates are on our right when walking from security and odd numbered gates are on the left.''

• When you are done guiding the person to his or her destination, ask if any other assistance is needed. You should not inform other passengers or carrier personnel that an individual with a vision impairment needs additional assistance unless the individual has requested you to do so.

• Be aware that many people with vision impairments prefer to walk rather than use mobility devices, such as wheelchairs or electric carts. You may not require an individual with a vision impairment to use a wheelchair and, if requested, you must provide a walking guide for that individual.

Service Animals and Assistive Devices

• Never pet or distract a service animal accompanying an individual with a vision impairment unless the individual specifically told you it is all right to do so.

• Do not separate passengers with vision impairments from their service animals unless the individual specifically told you it is acceptable to do so.

• Do not move a person's cane or assistive device if the person has placed it on the ground near a seat. If you ask and receive permission, you may help the passenger collect things if needed (for example, carry-on items or jackets.)

• Do not lean on a passenger's assistive device.

• Do not use a passenger's assistive device unless you have specific permission from the passenger.

• Do not disassemble a passenger's assistive device unless disassembly is necessary for stowage on the aircraft.

Tips for Assisting Individuals With Hearing or Hearing and Vision Impairments

Communication

• Remember that individuals with hearing impairments have various ways of communicating. Depending on the nature of their disability, these individuals may communicate using, for example, sign language, speech/lip reading, Text Telephones (TTY), a hearing aid, or an implant. A person's hearing impairment may go unnoticed unless the person self-identifies.

• When you speak, look directly at the person with a hearing impairment. The person may use speech/lip reading as a method of communicating. You should use normal lip movement and a normal tone of voice when speaking to the person. You should not shout because shouting distorts the sound, words, and lip movement. Sometimes you may need to rephrase your message because many words have the same lip movement, for example, the numbers 15 and 50. If you write a note, you should make the message short and simple. If the person with a hearing impairment uses an interpreter, you should look directly at the person with a hearing impairment and not the interpreter when speaking with the person with a hearing impairment.

• Identify yourself by name and job responsibility first.

• If individual safety briefings are required, conduct them discreetly with respect for the privacy of the person with the hearing or vision and hearing impairment. (§ 382.115(d)).

• Make sure a passenger with a vision or hearing impairment receives all relevant information as it becomes available to all passengers. For example,

if a boarding time is changed and the new boarding time is announced, you must inform the person through an accessible method of communicating. (§ 382.53 and 382.119).

• If a person uses a term relating to hearing or hearing and vision impairments that you are not familiar with or that you do not understand, ask the person to tell you what his or her needs are. If you need additional information, you should contact the CRO to discuss how best to proceed.

• An individual with both hearing and vision impairments may communicate through ''finger spelling'', which is an alternative to sign language. This method involves ''writing'' with your fingertip on the palm of the person's hand. You should use the fleshy part of your fingertip, not your nail. Always use all upper case letters and use the same reference point for each letter. You should hold the person's hand the same way each time, so the top and bottom letter falls in the same place. Make sure the words you print are ''right side up'' for the person receiving the message. You should write as large as possible and start in the upper left for a ''W'' and finish in the upper right. Use the entire palm area for each letter. Use one stroke for both the letter ''I'' and the number ''1''. It will be obvious which you intend from the context of what you are spelling. When you finish a word, ''wipe it off'' using the palm of your hand. This action indicates that you have finished one word and you are beginning a new word.

• Keep in mind that the SSR field of the PNR may contain information concerning a passenger with a hearing or hearing and vision impairment.

Guiding an Individual With Both Visual and Hearing Impairments

• Touch the person gently and offer your arm. Let the person take the back of your elbow near your body so that he or she can feel the change in gait as you approach different barriers and prepare for them. Do not take or grab the arm of a person with both hearing and vision impairments (particularly the arm with which the person is holding a cane or guide dog harness) and do not push him or her along.

• If the person has a guide dog, go to the side opposite the service animal and offer your arm (usually the person's right side). Remember that a person with both hearing and vision impairments cannot hear you. Therefore, you must convey information regarding obstacles, such as stairs, tactually.

• Individuals with both hearing and vision impairments often have poor balance so it is helpful to offer a steady hand to aid in orientation. You must never leave an individual with both hearing and vision impairments in an open space. You should place his or her hand on a wall, post, railing, or whatever sturdy, stationary object that is available.

Service Animals

• Never pet or distract a service animal accompanying a person who has a disability unless the person specifically tells you it is all right to do so.

• Do not separate passengers with hearing or hearing and vision impairments from their service animals unless the passenger specifically tells you it is all right to do so.

Tips for Assisting Individuals With Mobility Disabilities

Communication

• If a person uses a term to describe a mobility disability that you are not familiar with or that you don't understand, ask the person to tell you what he or she needs. If you need additional information, you should contact the CRO to discuss how best to proceed.

• If individual safety briefings are required, conduct them discreetly with respect for the privacy of the person with a mobility disability. (§ 382.115(d)).

• When having a long conversation with a person who is using a wheelchair, you should sit nearby so that you are closer to eye level.

Wheelchairs, Mobility Aids, and Other Assistive Devices

• Be aware of the types of wheelchairs and assistive devices used by people with mobility disabilities when traveling. You must be able to provide information to people about the different types of wheelchairs, services, and other equipment provided or accommodated by your carrier on the particular flight.

• Understand the proper function and storage of the different types of wheelchairs, mobility aids, and assistive devices. Ask the person with the mobility disability the best way to handle the device.

• Consider keeping information handy about businesses providing wheelchair repair in the area in case a person with a mobility disability needs the information.

Assisting With Transfers and Movement Through Terminal

• If you must transfer a person with a mobility disability from an aisle chair to a seat on the aircraft, or perform any other kind of transfer, explain the transfer procedures and listen to any instructions or preferences from the person before undertaking the transfer.

• You must never physically hand-carry a person with a mobility disability from the tarmac to the aircraft door (even if both of you are willing) except in an emergency evacuation situation. (§ 382.101). Note, however, that hand-carrying a passenger and lifting a passenger from his or her wheelchair onto a boarding chair and from a boarding chair onto his or her aircraft seat are not synonymous. Carriers are required to transfer passengers into and out of aircraft seats for boarding, deplaning, and in-flight use of the lavatory.

• When providing transportation between gates, ask the person with the mobility disability if he or she would prefer you to push the wheelchair. If the answer is ''yes,'' you should use elevators and avoid escalators and moving walkways. When maneuvering through the terminal, say, ''Excuse *us*'' rather than ''Excuse *me*.''

• Be aware that carriers are not permitted to charge passengers with disabilities for services or equipment required by Part 382. (§ 382.31). However, if a passenger with a disability voluntarily offers to tip you for providing a service, you should consult your carrier's policy to determine whether you can accept the tip. Soliciting tips is prohibited.

Service Animals

• Never pet or distract a service animal accompanying a person who has a mobility disability unless the person specifically tells you it is all right to do so.

• Do not separate passengers with a mobility disability from their service animals unless the passenger specifically tells you it is all right to do so.

Tips for Assisting Individuals With Difficulty Speaking

Communication

• Ask the person how he or she prefers to communicate.

• A pencil and paper may be okay for short conversations.

• If you do not understand something that is said, tell the person that you do not understand and ask the person to repeat the statement.

• Be patient. An individual with a speaking impairment may need extra time to communicate.

• Allow the individual to speak without attempting to finish his or her sentence.

• To obtain information quickly, you should ask short questions that require brief ''yes'' or ''no'' answers.

• Do not shout.

• You should remember that difficulty speaking does not indicate a lack of intelligence.

Tips for Assisting People With Disabilities That Are Not Apparent

Communication

• Do not make assumptions about the needs of people if their behavior appears to be unusual to you. Cognitive disabilities may cause people to reason, draw conclusions, or respond more slowly. Individuals with cognitive disabilities may appear easily distracted. Depending upon the disability, the person may understand materials in written form or through a verbal explanation. They may also find the background noise of a busy airport terminal extremely distracting.

• Disregard any speech impairments or physical tics by being patient and aware of your own body language and facial expressions that could convey your own discomfort.

• If individual safety briefings are required, conduct them discreetly with respect for the privacy of the person with a disability that is not apparent. (§ 382.115(d)). Similarly, if you are concerned that an individual is not medically stable enough for air travel, conduct the inquiry in a discreet manner and involve the CRO, if necessary.

• If a person with a disability that is not apparent uses a term to describe the disability that you are not familiar with or that you do not understand, ask the person to tell you what he or she needs. If you need additional information, you should contact the CRO to discuss how best to proceed.

Emotional Support, Psychiatric Service, or Other Service Animals

• Be aware that people who have disabilities that are not apparent may travel with emotional support, psychiatric service, or other service animals.

• Never pet or distract a service animal accompanying a person with a disability that is not apparent unless the person specifically tells you it is all right to do so.

• Do not separate passengers from their service, emotional support, or psychiatric service animals unless the passenger specifically tells you it is all right to do so.

Chapter 8: Personnel Training

A. U.S. and Foreign Carriers That Operate Aircraft With 19 or More Passenger Seats
B. U.S. and Foreign Carriers That Operate Aircraft With Fewer Than 19 Passenger Seats
C. Training Records

A. U.S. and Foreign Carriers That Operate Aircraft With 19 or More Passenger Seats

Thorough training of carrier personnel who interact with passengers with disabilities is vital to ensure good service to those passengers and required to comply with the Air Carrier Access Act (ACAA). (§ 382.141). As a U.S. or foreign carrier that operates aircraft with 19 or more passenger seats, you must provide the training for all personnel who deal with the traveling public, as appropriate to the duties of each employee. (§ 382.141(a)). Foreign carriers must provide such training only in connection with flights that begin or end at a U.S. airport, as appropriate to the duties of each employee. (§ 382.143(b)).

You also must ensure training to proficiency [23] on the following:

• Part 382 requirements and other applicable Federal regulations affecting the provision of air travel to passengers with a disability;

• Your procedures, consistent with Part 382, concerning the provision of air travel to passengers with a disability, including the proper and safe operation of any equipment used to accommodate passengers with a disability; and

• For those personnel involved in providing boarding and deplaning assistance, the use of the boarding and deplaning assistance equipment used by the carrier and appropriate boarding and deplaning assistance procedures that safeguard the safety and dignity of passengers. (§ 382.141(a)(1)(i) through (a)(1)(iii)).

You also must train employees with respect to awareness and appropriate responses to passengers with a disability, including persons with physical, sensory, mental, and emotional disabilities, such as how to distinguish among the differing abilities of individuals with a disability. (§ 382.141(a)(2)).

Individuals With Vision or Hearing Impairments

You must train employees to recognize requests for communication accommodation from individuals with vision or hearing impairments and to use the most common methods for communicating with these individuals that are readily available, such as writing notes or taking care to enunciate clearly. However, training in sign language is not required. (§ 382.141(a)(3)).

Passengers Who Are Both Deaf and Blind

You must train employees to recognize requests for communication accommodation from passengers who are both deaf and blind and to use established means of communicating with these passengers when they are available, such as passing out Braille cards if you have them, reading an information sheet that a passenger provides, or communicating with a passenger through an interpreter. (§ 382.141(a)(3)).

Refresher Training

Refresher training is intended to assist employees in maintaining proficiency by reminding them of the ACAA requirements and carrier procedures for implementing these requirements.

Complaints Resolution Officials (CROs)

Employees performing the CRO function must receive annual refresher training concerning Part 382 and their duties. (§ 382.143(a)(1) for U.S. carriers and § 382.143(b)(1) for foreign carriers).

Other Personnel Who Deal With the Traveling Public

You must ensure that all personnel who are required by Part 382 to receive training receive refresher training on the matters covered by § 382.141(a), as appropriate to the duties of each employee, as needed to maintain proficiency. You must develop a program that will result in each such employee receiving refresher training at least once every 3 years. The program must describe how employee proficiency will be maintained. (§ 382.141(a)(5)).

Contractors

You must provide, or ensure that your contractors provide, training to your contractors' employees concerning

[23] Proficient is defined as being well-advanced, adept, or skilled in a trade or profession. An employee who is trained to proficiency is one who provides services or accommodations to passengers in the right way, the first time. For more information see *Answers to Frequently Asked Questions(FAQs) Concerning Air Travel of People with Disabilities Under the Amended Air Carrier Access Act Regulation (FAQs no. 60)* issued by the DOT Office of Assistant General Counsel for Aviation Enforcement and Proceedings and its Aviation Consumer Protection Division (May 13, 2009) at *http://airconsumer.ost.dot.gov/SA_Disability.htm.*

travel by passengers with a disability. This training is required only for those contractor employees that you employ directly and whom deal directly with the traveling public or their assistive devices, and it must be tailored to the employees' functions. (§ 382.141(a)(6)). In other words, you would not be responsible for ensuring the training of an airport employee or contractor who is not employed directly by your carrier.

CROs

You must train CROs on the requirements of Part 382 and the duties of CROs. (§ 382.141(a)(7)). CROs must be trained to be experts on all aspects of Part 382. See Chapter 6: Assisting Air Travelers with Disabilities with their Complaints for information on CROs and their duties under Part 382. As previously noted, you must provide annual refresher training to employees performing the CRO function. (§ 382.143(a)(1) for U.S. carriers and § 382.143(b)(1) for foreign carriers).

Consulting With Disability Organizations

When developing your training programs you must consult with organizations representing persons with disabilities in your home country. If such organizations are not available in your home country, you may consult with individuals with disabilities and/or international organizations representing individuals with disabilities. (§ 382.141(a)(4)).

Personnel Employed on May 13, 2009

You must have trained personnel employed on May 13, 2009, one time in the changes resulting from the amendment of Part 382, which was issued on that date. (§ 382.141(a)(8)).

Training Schedule Summary

Crewmembers

You must provide training to your crewmembers that meets the requirements of § 382.141(a) before they assume their duties. (§ 382.143(a)(3) and (b)(3)). For U.S. carriers this requirement applies to crewmembers subject to the training requirements of 14 CFR parts 121 or 135. You also must provide refresher training appropriate to the crewmember's duties every 3 years. (§ 382.141(a)(5)).

CROs

You must provide training to your CROs concerning the requirements of Part 382 and the duties of a CRO before they assume their duties. You also must provide annual refresher training to your CROs. (§ 382.143(a)(1) and (b)(1)).

Personnel Other Than Crewmembers or CROs

You must provide training for other personnel, including contractors, that meets the requirements of § 382.141(a) within 60 days after the date they assume their duties. (§ 382.143(a)(4) and (b)(4)) You also must provide refresher training to such personnel appropriate to their duties every 3 years. (§ 382.141(a)(5)).

Note: The Department of Transportation (DOT) has developed a Model Training Program on the ACAA and Part 382. You can view the training program module at *http://airconsumer.dot.gov/*.

B. U.S. and Foreign Carriers That Operate Aircraft With Fewer Than 19 Passenger Seats

Both U.S. and foreign carriers that operate aircraft with fewer than 19 passenger seats must provide training for flight crewmembers and appropriate personnel to ensure they comply with Part 382 and are familiar with the following:

- Part 382 requirements and other applicable Federal regulations affecting the provision of air travel to passengers with a disability;
- Your procedures, consistent with Part 382, concerning the provision of air travel to passengers with a disability, including the proper and safe operation of any equipment used to accommodate passengers with a disability; and
- For those personnel involved in providing boarding and deplaning assistance, the use of the boarding and deplaning assistance equipment used by the carrier and appropriate boarding and deplaning assistance procedures that safeguard the safety and dignity of passengers. (§ 382.141(b)).

You also must train employees with respect to awareness and appropriate responses to passengers with a disability, including persons with physical, sensory, mental, and emotional disabilities, such as how to distinguish among the differing abilities of individuals with a disability. (§ 382.141(b)). Although carriers operating only aircraft with fewer than 19 passengers seats are not specifically required to designate or train a CRO, it would be a good idea to train one or more in-house experts on all of the requirements of Part 382, so that other employees within your carrier have a person to contact to discuss difficult or complex disability-related questions or situations.

C. Training Records

As a U.S. or foreign carrier that operates aircraft with 19 or more passenger seats, you must maintain records of the procedures you use to comply with Part 382, including those portions of manuals and other instructional materials concerning Part 382 compliance, and individual employee training records.

Specifically, as such a carrier, you must include procedures for implementing Part 382 requirements in the manuals, guidance, or instructional materials you provide to your personnel and contractors who provide service to passengers, including pilots, flight attendants, reservation and ticket counter personnel, gate agents, ramp and baggage handling personnel, and passenger service office personnel.

Note: You do not need to submit these manuals, guidance, or instructional materials or a certification of compliance to DOT for review. However, you must retain these materials for DOT review if DOT requests to review them. (§ 382.145(a)).

As a U.S. or foreign carrier, you also must retain individual employee training records for 3 years demonstrating that all persons required to receive initial and refresher training have done so. (§ 382.145(b)).

Alphabetical Index—Part 382 Index

PART 382 SECTION

Subpart A—General Provisions

382.1 What is the purpose of this Part?

382.1

382.3 What do the terms in this rule mean?

382.3

382.5 When are foreign carriers required to begin complying with the provisions of this Part?

382.5

382.7 To whom do the provisions of this Part apply?

382.7
382.7(a)
382.7(b)
382.7(c)
382.7(d)
382.7(e)
382.7(f)
382.7(g)

382.9 What may foreign carriers do if they believe a provision of a foreign nation's law prohibits compliance with a provision of this Part?

382.9
382.9(a)
382.9(b)
382.9(c)
382.9(c)(1)
382.9(c)(2)
382.9(c)(3)
382.9(d)
382.9(e)
382.9(e)(1)
382.9(e)(2)
382.9(e)(3)
382.9(f)

382.9(g)

382.10 How does a carrier obtain a determination that it is providing an equivalent alternative to passengers with disabilities?

382.10
382.10(a)
382.10(b)
382.10(c)
382.10(c)(1)
382.10(c)(2)
382.10(d)
382.10(e)
382.10(f)
382.10(f)(1)
382.10(f)(2)

Subpart B—Nondiscrimination and Access to Services

382.11 What is the general nondiscrimination requirement of this Part?

382.11
382.11(a)
382.11(a)(1)
382.11(a)(2)
382.11(a)(3)
382.11(a)(4)
382.11(b)

382.13 Do carriers have to modify policies, practices, and facilities to ensure nondiscrimination?

382.13
382.13(a)
382.13(b)
382.13(c)

382.15 Do carriers have to make sure that contractors comply with the requirements of this Part?

382.15
382.15(a)
382.15(b)
382.15(b)(1)
382.15(b)(2)
382.15(c)
382.15(d)
382.15(e)

382.17 May carriers limit the number of passengers with a disability on a flight?

382.17

382.19 May carriers refuse to provide transportation on the basis of disability?

382.19
382.19(a)
382.19(b)
382.19(c)
382.19(c)(1)
382.19(c)(1)(i)
382.19(c)(1)(ii)
382.19(c)(1)(iii)
382.19(c)(2)
382.19(c)(3)
382.19(c)(4)
382.19(d)

382.21 May carriers limit access to transportation on the basis that a passenger has a communicable disease or other medical condition?

382.21
382.21(a)
382.21(a)(1)
382.21(a)(2)
382.21(a)(3)
382.21(a)(4)
382.21(b)
382.21(b)(1)
382.21(b)(2)
382.21(c)
382.21(d)
382.21(e)

382.23 May carriers require a passenger with a disability to provide a medical certificate?

382.23
382.23(a)
382.23(b)
382.23(b)(1)
382.23(b)(1)(i)
382.23(b)(1)(ii)
382.23(b)(1)(iii)
382.23(b)(2)
382.23(b)(3)
382.23(c)
382.23(c)(1)
382.23(c)(2)
382.23(d)

382.25 May a carrier require a passenger with a disability to provide advance notice that he or she is traveling on a flight?

382.25

382.27 May a carrier require a passenger with a disability to provide advance notice in order to obtain certain specific services in connection with a flight?

382.27
382.27(a)
382.27(b)
382.27(c)
382.27(c)(1)
382.27(c)(2)
382.27(c)(3)
382.27(c)(4)
382.27(c)(5)
382.27(c)(6)
382.27(c)(7)
382.27(c)(8)
382.27(c)(9)
382.27(c)(10)
382.27(d)
382.27(e)
382.27(f)
382.27(g)

382.29 May a carrier require a passenger with a disability to travel with a safety assistant?

382.29
382.29(a)
382.29(b)
382.29(b)(1)
382.29(b)(2)
382.29(b)(3)
382.29(b)(4)
382.29(c)
382.29(c)(1)
382.29(c)(2)
382.29(c)(2)(i)
382.29(c)(2)(ii)
382.29(c)(3)
382.29(d)
382.29(e)
382.29(f)

382.31 May carriers impose special charges on passengers with a disability for providing services and accommodations required by this rule?

382.31
382.31(a)
382.31(b)
382.31(c)

382.33 May carriers impose other restrictions on passengers with a disability that they do not impose on other passengers?

382.33
382.33(a)
382.33(b)
382.33(b)(1)
382.33(b)(2)
382.33(b)(3)
382.33(b)(4)
382.33(b)(5)

382.35 May carriers require passengers with a disability to sign waivers or releases?

382.35
382.35(a)
382.35(b)

Subpart C—Information for Passengers

382.41 What flight-related information must carriers provide to qualified individuals with a disability?

382.41
382.41(a)
382.41(b)
382.41(c)
382.41(d)
382.41(e)
382.41(f)

382.43 Must information and reservation services of carriers be accessible to individuals with hearing impairments?

382.43
382.43(a)
382.43(a)(1)
382.43(a)(2)
382.43(a)(3)
382.43(a)(4)
382.43(a)(5)
382.43(b)

382.45 Must carriers make copies of this Part available to passengers?

382.45
382.45(a)
382.45(b)
382.45(b)(1)
382.45(b)(2)
382.45(b)(3)
382.45(b)(4)

Subpart D—Accessibility of Airport Facilities

382.51 What requirements must carriers meet concerning the accessibility of airport facilities?

382.51
382.51(a)
382.51(a)(1)
382.51(a)(2)
382.51(a)(3)
382.51(a)(4)
382.51(a)(5)
382.51(a)(6)
382.51(a)(7)

382.51(a)(8)
382.51(b)
382.51(b)(1)
382.51(b)(2)
382.51(c)

382.53 What must carriers give individuals with a vision or hearing impairment at airports?

382.53
382.53(a)
382.53(a)(1)
382.53(a)(2)
382.53(a)(3)
382.53(b)
382.53(c)

382.55 May carriers impose security screening procedures for passengers with disabilities that go beyond TSA requirements or those of foreign governments?

382.55
382.55(a)
382.55(b)
382.55(b)(1)
382.55(b)(2)
382.55(b)(2)(i)
382.55(b)(2)(ii)
382.55(b)(3)
382.55(c)
382.55(d)

382.57 What services must carriers provide if their automated kiosks are inaccessible?

382.57

Subpart E—Accessibility of Aircraft

382.61 What are the requirements for movable aisle armrests?

382.61
382.61(a)
382.61(b)
382.61(c)
382.61(d)
382.61(e)
382.61(f)
382.61(g)

382.63 What are the requirements for accessible lavatories?

382.63
382.63(a)
382.63(a)(1)
382.63(a)(2)
382.63(a)(3)
382.63(b)
382.63(c)
382.63(d)
382.63(e)

382.65 What are the requirements concerning on-board wheelchairs?

382.65
382.65(a)
382.65(b)
382.65(b)(1)
382.65(b)(2)
382.65(c)
382.65(c)(1)
382.65(c)(2)
382.65(d)

382.67 What is the requirement for priority space in the cabin to store passenger wheelchairs?

382.67
382.67(a)
382.67(b)
382.67(c)

382.69 What requirements must carriers meet concerning the accessibility of videos, DVDs, and other audio-visual presentations shown on aircraft to individuals who are deaf or hard of hearing?

382.69
382.69(a)
382.69(b)
382.69(c)
382.69(d)

382.71 What other aircraft accessibility requirements apply to carriers?

382.71
382.71(a)
382.71(b)

Subpart F—Seating Accommodations

382.81 For which passengers must carriers make seating accommodations?

382.81
382.81(a)
382.81(b)
382.81(b)(1)
382.81(b)(2)
382.81(b)(3)
382.81(b)(4)
382.81(c)
382.81(d)

382.83 Through what mechanisms do carriers make seating accommodations?

382.83
382.83(a)
382.83(a)(1)
382.83(a)(1)(i)
382.83(a)(1)(ii)
382.83(a)(1)(iii)
382.83(a)(2)
382.83(a)(2)(i)
382.83(a)(2)(ii)
382.83(a)(2)(iii)
382.83(a)(2)(iv)
382.83(b)
382.83(c)
382.83(d)

382.85 What seating accommodations must carriers make to passengers in circumstances not covered by 382.81(a)–(d)?

382.85
382.85(a)
382.85(a)(1)
382.85(a)(1)(i)
382.85(a)(1)(ii)
382.85(a)(2)
382.85(a)(2)(i)
382.85(a)(2)(ii)
382.85(b)
382.85(c)

382.87 What other requirements pertain to seating for passengers with a disability?

382.87
382.87(a)
382.87(b)
382.87(c)
382.87(d)
382.87(e)
382.87(f)

Subpart G—Boarding, Deplaning, and Connecting Assistance

382.91 What assistance must carriers provide to passengers with a disability in moving within the terminal?

382.91
382.91(a)
382.91(b)
382.91(b)(1)
382.91(b)(2)
382.91(c)
382.91(d)

382.93 Must carriers offer preboarding to passengers with a disability?

382.93

382.95 What are carriers' general obligations with respect to boarding and deplaning assistance?

382.95
382.95(a)
382.95(b)

382.97 To which aircraft does the requirement to provide boarding and deplaning assistance through the use of lifts apply?

382.97
382.97(a)
382.97(b)
382.97(c)
382.97(c)(1)
382.97(c)(2)

382.99 What agreements must carriers have with the airports they serve?

382.99
382.99(a)
382.99(b)
382.99(c)
382.99(d)
382.99(e)
382.99(f)
382.99(g)

382.101 What other boarding and deplaning assistance must carriers provide?

382.101
382.101(a)
382.101(b)
382.101(c)
382.101(d)
382.101(e)

382.103 May a carrier leave a passenger unattended in a wheelchair or other device?

382.103

382.105 What is the responsibility of carriers at foreign airports at which airport operators have responsibility for enplaning, deplaning, and connecting assistance?

382.105

Subpart H—Services on Aircraft

382.111 What services must carriers provide to passengers with a disability on board the aircraft?

382.111
382.111(a)
382.111(b)
382.111(c)
382.111(d)
382.111(e)
382.111(f)

382.113 What services are carriers not required to provide to passengers with a disability on board the aircraft?

382.113
382.113(a)
382.113(b)
382.113(c)

382.115 What requirements apply to onboard safety briefings?

382.115
382.115(a)
382.115(b)
382.115(c)
382.115(d)
382.115(e)

382.117 Must carriers permit passengers with a disability to travel with service animals?

382.117
382.117(a)
382.117(a)(1)
382.117(a)(2)
382.117(b)
382.117(c)
382.117(d)
382.117(e)
382.117(e)(1)
382.117(e)(2)
382.117(e)(3)
382.117(e)(4)
382.117(f)
382.117(g)
382.117(h)
382.117(i)

382.119 What information must carriers give individuals with vision or hearing impairment on aircraft?

382.119
382.119(a)
382.119(b)

Subpart I—Stowage of Wheelchairs, Other Mobility Aids, and Other Assistive Devices

382.121 What mobility aids and other assistive devices may passengers with a disability bring into the aircraft cabin?

382.121
382.121(a)
382.121(a)(1)
382.121(a)(2)
382.121(a)(3)
382.121(b)

382.123 What are the requirements concerning priority cabin stowage space for wheelchairs and other assistive devices?

382.123
382.123(a)
382.123(a)(1)
382.123(a)(2)
382.123(a)(3)
382.123(b)
382.123(c)

382.125 What procedures do carriers follow when wheelchairs, other mobility aids, and other assistive devices must be stowed in the cargo compartment?

382.125
382.125(a)
382.125(b)
382.125(c)
382.125(c)(1)
382.125(c)(2)
382.125(d)

382.127 What procedures apply to stowage of battery-powered mobility aids?

382.127
382.127(a)
382.127(b)
382.127(c)
382.127(d)
382.127(e)
382.127(f)

382.129 What other requirements apply when passengers' wheelchairs, other mobility aids, and other assistive devices must be disassembled for stowage?

382.129
382.129(a)
382.129(b)

382.131 Do baggage liability limits apply to mobility aids and other assistive devices?

382.131

382.133 What are the requirements concerning the evaluation and use of passenger-supplied electronic devices that assist passengers with respiration in the cabin during flight?

382.133
382.133(a)
382.133(a)(1)
382.133(a)(2)
382.133(b)
382.133(b)(1)
382.133(b)(2)
382.133(b)(3)
382.133(c)
382.133(c)(1)
382.133(c)(2)
382.133(c)(3)
382.133(c)(4)
382.133(c)(5)
382.133(c)(6)
382.133(d)
382.133(d)(1)
382.133(d)(2)
382.133(d)(3)
382.133(d)(4)
382.133(d)(5)
382.133(d)(6)
382.133(d)(7)
382.133(e)
382.133(f)
382.133(f)(1)
382.133(f)(2)
382.133(f)(3)

Subpart J—Training and Administrative Provisions

382.141 What training are carriers required to provide for their personnel?

382.141
382.141(a)
382.141(a)(1)
382.141(a)(1)(i)
382.141(a)(1)(ii)
382.141(a)(1)(iii)
382.141(a)(2)
382.141(a)(3)
382.141(a)(4)
382.141(a)(5)
382.141(a)(6)
382.141(a)(7)
382.141(a)(8)
382.141(b)

382.143 When must carriers complete training for their personnel?

382.143
382.143(a)
382.143(a)(1)
382.143(a)(2)
382.143(a)(3)
382.143(a)(4)
382.143(b)
382.143(b)(1)
382.143(b)(2)
382.143(b)(3)
382.143(b)(4)
382.143(b)(5)

382.145 What records concerning training must carriers retain?

382.145
382.145(a)
382.145(b)

Subpart K—Complaints and Enforcement Procedures

382.151 What are the requirements for providing Complaints Resolution Officials?

382.151
382.151(a)
382.151(b)
382.151(c)
382.151(c)(1)
382.151(c)(2)
382.151(d)
382.151(e)

382.153 What actions do CROs take on complaints?

382.153
382.153(a)
382.153(b)
382.153(c)
382.153(d)

382.155 How must carriers respond to written complaints?

382.155
382.155(a)
382.155(b)
382.155(c)
382.155(d)
382.155(d)(1)
382.155(d)(2)
382.155(d)(3)

382.157 What are carriers' obligations for recordkeeping and reporting on disability-related complaints?

382.157
382.157(a)
382.157(b)
382.157(c)
382.157(d)
382.157(e)
382.157(f)
382.157(f)(1)
382.157(f)(1)(i)
382.157(f)(1)(ii)
382.157(f)(1)(iii)
382.157(f)(2)
382.157(g)
382.157(h)

382.159 How are complaints filed with DOT?

382.159

382.159(a)
382.159(a)(1)
382.159(a)(2)
382.159(b)
382.159(c)

Appendix A—Disability Complaint Reporting Form

Appendix B—Cross Reference Table

Appendix I Table of Effective Dates

Section	Subject	Applicable to . . .	Compliance date
382.43	Information and reservation services	Foreign carriers	May 13, 2010.
382.51	Accessibility of airport facilities	Foreign carriers	May 13, 2010.
382.51(b)	Accessibility of airport facilities at a foreign airport.	U.S. carriers	May 13, 2010.
382.61(a) through (d).	Movable aisle armrests	Foreign carriers	May 13, 2009 (for new aircraft initially ordered after this date).
			May 13, 2010 (for new aircraft delivered after this date).
382.61(e)			May 13, 2009 (for seats ordered after this date).
382.61 (a), (b), (d) and (e).		U.S. carriers	May 13, 2009 (for new aircraft initially ordered after April 5, 1990, or delivered after April 5, 1992).
382.61(c)			May 13, 2009 (for new aircraft initially ordered after this date).
			May 13, 2010 (for new aircraft delivered after this date).
382.63(a)	Accessible lavatories	Foreign carriers	May 13, 2009 (for new aircraft initially ordered after this date).
			May 13, 2010 (for new aircraft delivered after this date).
		U.S. carriers	May 13, 2009 (for new aircraft initially ordered after April 5, 1990, or delivered after April 5, 1992).
382.63(c)	Accessible lavatories retrofit	Foreign carriers	May 13, 2009.
		U.S. carriers	May 13, 2009 (for new aircraft initially ordered after April 5, 1990, or delivered after April 5, 1992.
382.65(d)	On-board wheelchairs	Foreign carriers	May 13, 2010.
		U.S. carriers	May 13, 2009.
382.67(a)	Priority space to store passengers' wheelchairs in the cabin.	Foreign carriers	May 13, 2009 (for new aircraft initially ordered after this date).
			May 13, 2010 (for new aircraft delivered after this date).
		U.S. carriers	May 13, 2009 (for new aircraft initially ordered after April 5, 1990, or delivered after April 5, 1992).
382.69(a)	Informational displays	Foreign carriers	January 8, 2010.
		U.S. carriers	
	Audio-visual displays used for safety purposes.	Foreign carriers	November 10, 2009.
		U.S. carriers	
382.69(c)	Videos, DVDs, and other audio visual displays used for safety purposes with open captioning or inset for sign language interpreter.	U.S. carriers	Between May 13, 2009, and November 9, 2009.
382.99	Airport agreements	Foreign carriers	May 13, 2011.
382.143(a)	CRO Training and Changes to Part 382.	U.S. carriers—CROs	May 13, 2009 (one time training for CROs about Part 382 changes).
	Changes to Part 382	U.S. carriers—Existing employees	No later than the next scheduled recurrent training after May 13, 2009, or within 1 year after May 13, 2009, whichever comes first.
		U.S. carriers—Part 121 or Part 135 crewmembers whose employment as a crewmember begins after May 13, 2009.	Before they assume their duties.
		U.S. carriers—Other personnel whose employment begins after May 13, 2009.	Within 60 days after the date on which they assume their duties.
382.143(b)(1)	Training for personnel dealing with the traveling public.	Foreign carriers that operate aircraft with 19 or more passenger seats on flights that begin or end at a U.S. airport.	
		CROs	May 13, 2009.
		Crewmember and other personnel who are employed on May 13, 2009.	Within 1 year of May 13, 2009.

Section	Subject	Applicable to . . .	Compliance date
		Crewmember and other personnel whose employment begins after May 13, 2009.	Before they assume their duties.
		Other personnel whose employment begins after May 13, 2010.	Within 60 days after the date on which they assume their duties.
		Crewmembers and other personnel whose employment begins after May 13, 2009, but before May 13, 2010.	By May 13, 2010 or a date 60 days after the date of their employment whichever is later.

Appendix II Tips for Air Travelers with Disabilities

Tips for Air Travelers With Disabilities

There are some commonly used accommodations, facilities, and services that carriers are required to make available to passengers with disabilities. This Appendix provides a list of tips and general guidelines for air travelers with disabilities regarding these commonly used accommodations, facilities, and services. Therefore, the ''you'' referred to in this appendix is an air traveler with a disability.

Ask Questions and Provide Instructions

Aircraft Accessibility

Know what to ask carrier personnel. Be clear and specific. You can ask for, and carrier personnel must be able to provide, the following information on the accessibility of the specific aircraft the carrier expects to use for your flight:

- The specific location of seats, if any, with movable armrests (by row and seat number);
- The specific location of seats the carrier does not make available to passengers with a disability (for example, exit row seats);
- Any aircraft-related, service-related or other limitations on the carrier's ability to accommodate passengers with a disability including limitations on the availability of level-entry boarding at any airport involved with the flight. Carriers must provide this information to any passenger who states that he or she uses a wheelchair for boarding even if the passenger does not explicitly request the information;
- Any limitations on the availability of storage facilities in the cabin or cargo compartment for mobility aids or other assistive devices, including the storage of a passenger's manual folding wheelchair in the cabin as provided for in §§ 382.67 and 382.123;
- Whether the aircraft has an accessible lavatory; and
- The types of services to passengers with a disability that are not available on the flight. (§ 382.41).

Passengers with a disability should be aware that circumstances could affect the accuracy of information provided at the time they make a reservation. For example, a carrier may use a different aircraft for a flight because of mechanical problems.

Advance Notice

Generally, passengers with a disability are not required to provide advance notice that they will be traveling on a flight. However, it is best to provide detailed information about the accommodations you need in advance of travel to assist carrier personnel in providing accommodations in a correct and timely manner.

In addition, there are some accommodations that passengers with a disability may need or want that carriers may reasonably require time to arrange. For certain accommodations or services, carriers may legally require advance notice and passengers with a disability to check in before the general public. Carriers may require that a passenger with a disability provide 48 hours' advance notice and check-in 1 hour before the check-in time for the general public to receive the following services and accommodations, some of which are required and some of which are optional:

Required Services

- Transportation of an electric wheelchair on an aircraft with fewer than 60 passenger seats;
- Accommodation of 10 or more passengers with a disability who make reservations and travel as a group;
- Use of passenger-supplied ventilator, respirator, continuous positive airway pressure (CPAP) machine, or Federal Aviation Administration (FAA)-approved portable oxygen concentrator (POC);
- Transportation of an emotional support or psychiatric service animal in the cabin;
- Transportation of any service animal on a flight segment scheduled to take 8 or more hours;
- Provision of hazardous materials packaging for batteries or other assistive devices that are required to have such packaging;
- Provision of an on-board wheelchair on an aircraft with more than 60 passenger seats that does not have an accessible lavatory; and
- Accommodation of a passenger with both severe vision and hearing impairments.

Optional Services

- Carriage of an incubator;
- Hook-up for a respirator, ventilator, CPAP machine or POC to the aircraft's electrical supply;
- Accommodation for a passenger traveling in a stretcher; and
- Carrier-supplied supplemental oxygen (for international flights, carriers may require 72 hours' advance notice and check in 1 hour before the check-in time for the general public).

(§ 382.27).

Trips Involving Multiple Carriers

If you are making a connection, you may want to investigate whether your trip involves more than one carrier. If so, contact each carrier to determine whether it is able to accommodate your needs fully. Keep in mind that carriers may provide optional accommodations on mainline flights [24] only and not on the flights operated by their smaller codeshare [25] affiliates. For example, some carriers do not provide medical oxygen on board the aircraft. Do not assume that by communicating with the carrier for the first flight segment of your trip, other carriers handling the rest of your trip are fully briefed and able to accommodate your requests. Similarly, when booking reservations online, be aware that many carriers have their policies posted on their Web sites. You may also want to consider contacting each carrier by telephone to verify the carrier's individual policies and to provide and receive specific information to ensure your needs are met for each flight segment of your trip.

Provide Information

Although you are generally not required to (1) self-identify as a passenger with a disability or (2) accept services offered by carrier personnel that are not needed to accommodate your disability, most carriers assume that assistance is not needed unless requested. Therefore, it is incumbent upon you to notify carrier personnel of your desire for assistance. In addition, self-identifying as needing assistance and providing specific guidance to carrier personnel as to the assistance requested allows carrier personnel to assist you better. For example, if you need assistance with transportation from the ticket counter (check-in) to the gate area (boarding), it would be best to notify the carrier of such request before arriving at the airport and to self-identify as requiring such assistance to carrier personnel once you have arrived at the airport. In addition, clear instructions to carrier personnel, such as your need for assistance from the ticket counter to the gate but your ability to walk the short distance from the gate to your aircraft seat, will help the carrier ensure that you obtain the assistance you need. Finally, if you use a personal wheelchair, you may want to ask carrier personnel to remove footrests (if possible) and other removable parts and to stow them in the cabin to reduce the potential for damage to the wheelchair while it is stowed in the cabin or in the cargo compartment.

[24] A mainline flight is a flight operated by an airline's main operating unit, rather than by regional alliances, regional codeshares, or regional subsidiaries.

[25] Code-sharing is a marketing arrangement in which an air carrier places its designator code on a flight operated by another air carrier and sells tickets for that flight.

Boarding Assistance

When communicating to carrier personnel about your need for boarding assistance, be as specific as possible about the type or level of boarding assistance you require. For example, if you are completely immobile, ask carrier personnel to provide a wheelchair to transport you to and from the gate, a lift (if necessary), and assistance transferring from an aisle chair to a seat. If you are able to walk short distances, but cannot walk up and down stairs, ask carrier personnel to provide a wheelchair for longer distances to and from the aircraft and a lift (if necessary). If you can walk up and down stairs and can walk shorter distances but have difficulty walking longer distances, ask carrier personnel to provide a wheelchair or electric cart for longer distances to and from the aircraft.

Carrier personnel are not permitted to physically hand-carry a passenger with a disability on or off an aircraft, except in the case of an emergency evacuation. (§ 382.101). (Note the regulations do not prohibit carrier personnel from transferring a passenger from an aisle chair into his or her aircraft seat.) Keep in mind that if none of the options for boarding a particular flight is acceptable to you, you may have to wait for another flight or alter your travel plans.

Carrying Assistive Devices On Board the Aircraft

Carriers recommend that you carry on board the aircraft medicine or other assistive devices, such as syringes, that you may need in the case of a flight cancellation or a missed flight. At times, passengers can be separated unexpectedly from checked baggage. If you decide to carry medication or other assistive devices with you on board, the carrier must not count these items toward your carry-on baggage limit. (§ 382.121(b)). While not specifically required, it is recommended that a carrier permit you to keep your assistive device near you on board when it does not interfere with carry-on baggage safety requirements.

Carry Information and Useful Documentation

Bring photocopies of instructions about the assembly and disassembly of wheelchairs and other assistive devices when you travel. You can provide this information to carrier personnel who stow or check your wheelchair or assistive device. It may also be a good idea to attach a laminated set of brief instructions to your wheelchair or assistive device in the event that it is disassembled or reassembled in a secure area to which you do not have access.

Traveling with photocopies of receipts, warranties, or other product information concerning a wheelchair or assistive device may be useful if the item is lost or damaged in transit. This information might help with locating a repair option or processing a claim for liability against the carrier responsible for the loss or damage.

Individual Safety Briefings

You may require an individual safety briefing if your disability prevents you from understanding the safety briefing or if otherwise required by applicable safety rules. Carriers should provide the safety briefing in a manner accessible to you and as inconspicuously and discreetly as possible. (§ 382.115). Keep in mind that you may need to provide information to carrier personnel to ensure that the individual safety briefing is accessible to you.

Required Services on the Aircraft

Carriers must provide the following services within the aircraft cabin as requested by or on behalf of a passenger with a disability, or when offered by carrier personnel and accepted by a passenger with a disability:

- Assistance moving to and from seats, as part of boarding and deplaning;
- Assistance in preparation for eating, such as opening packages and identifying food;
- If there is an on-board wheelchair on the aircraft, assistance with the use of the on-board wheelchair to enable the person to move to and from a lavatory (this requires airline in-flight personnel to transfer passengers, on request, from an aircraft seat into an aisle wheelchair in most instances);
- Assistance to a semi-ambulatory person in moving to and from the lavatory, without lifting or carrying the person;
- Assistance in stowing and retrieving carry-on items, including mobility aids and other assistive devices stowed in the cabin (see also (§ 382.91(d)). To receive such assistance, a passenger must self-identify as being an individual with a disability needing the assistance; and
- Effective communication with passengers who have vision impairments and/or who are deaf or hard-of-hearing, so that these passengers have timely access to information the carrier provides to other passengers (for example, information about weather, on-board services, flight delays, and connecting gates at the next airport). (§ 382.111).

Limitations on Services On Board the Aircraft

Carrier personnel are prohibited from physically hand-carrying you on or off an aircraft except in an emergency evacuation. (§ 382.101). Additionally, carrier personnel are not required to provide extensive special assistance to you. For example, carrier personnel are not required to——

- Provide you with medical services,
- Assist you in actual eating,
- Assist you within the restroom, or
- Assist you with elimination functions at your seat. (§ 382.113).

Preboarding as an Option

Carriers must offer preboarding to passengers with a disability who self-identify at the gate as needing additional time or assistance to board, stow accessibility equipment, or be seated. (§ 382.93). Although you are not required to preboard, taking advantage of this opportunity may assist you in securing a suitable seating accommodation when a carrier does not provide advance seat assignments. In this situation, you may pre-board before all other passengers and select a seat that best meets your needs.[26]

Preboarding may also allow you to secure priority storage space for your wheelchair or assistive device or allow easier access to overhead compartments if you are stowing your assistive device or parts of your wheelchair onboard the aircraft.

Safety Always Considered

You should keep in mind that carriers are obligated to take the safety of *all* passengers into consideration when making decisions about accommodations for passengers with disabilities. At times, safety requires placing certain limitations on accommodations. For example, a service animal cannot block the aisle or an exit.

Seating Assignments

When requesting a particular seat assignment, you should be as specific as possible about the type of seat that will meet your needs as a passenger with a disability. This information will help carrier personnel provide you with the most appropriate seating accommodations. For example, instead of asking for an ''accessible'' seat, it is more helpful to provide some details about your specific needs, such as a bulkhead seat or an aisle seat with a movable armrest. In addition, carriers may request enough information about the nature of your disability to determine if you are entitled to a particular seating accommodation if you have not initially self-identified as having a condition qualifying you for a disability-related seating accommodation. For example, a carrier may ask if you require an aisle chair to board if you have requested a seat in a row with a movable armrest.

You should be aware that some carriers have begun charging an extra fee for occupying certain seats. Such fees are generally not prohibited, if the carrier fully complies with the Part 382 seating requirements at no added cost to a qualified individual with a disability. For more information on this topic, see Chapter 5, Section B, Seating Assignments and Accommodations.

Service Animals

Generally, advance notice is not required from passengers with a disability traveling with a service animal on flights of less than 8 hours, other than an emotional support or psychiatric service animal. However, to guarantee your seat assignment, depending on whether the carrier provides advance seat assignments and the type of seating method it uses, the carrier may have a policy requiring passengers with a service animal to:

- Request a particular seat assignment no later than 24 hours in advance of the scheduled departure of the flight, and
- Check in at least 1 hour before the standard check-in time for the flight.

Carriers are obligated to make a good faith effort to accommodate you and your service animal regardless of whether you comply with the carrier's advance seat assignment

[26] Southwest Airlines has been granted an equivalent alternative determination permitting it to preboard passengers requiring boarding assistance, seating accommodations, or stowage space for an assistive device before all other passengers, and allowing it to board passengers who simply need extra time to walk to their seats to board after its first boarding group but before all other passengers. (§ 382.10).

policy and/or advance check-in requirement. If you are traveling with a service animal, you may request, and the carrier must provide, a bulkhead seat or a seat other than a bulkhead seat that accommodates your needs if the seating accommodation exists on the aircraft. (§ 382.81(c)).

In addition, if you are traveling with an emotional support or psychiatric service animal in the aircraft cabin or with any type of service animal on a flight segment scheduled to take 8 hours or more, the carrier may require you to provide 48 hours' advance notice and to check in 1 hour before the check in time for the other passengers. (§ 382.27(c)(8)(9)). You should be aware that foreign carriers are not required to carry service animals other than dogs (except as noted in § 382.7(c) for codeshare flights with a U.S. carrier.).

Keep in mind that requesting your seat assignment well in advance of the flight may permit you to secure the specific seat assignment you would like with the least amount of waiting, inconvenience, or stress to you.

Documentation for Emotional Support or Psychiatric Service Animals

Carriers also may require that passengers traveling with emotional support or psychiatric service animals present current documentation (that is, no older than 1 year from the date of the passenger's scheduled initial flight)[27] on the letterhead of a licensed mental-health professional, including a medical doctor, specifically treating the passenger's mental or emotional disability stating—

- The passenger has a recognized mental or emotional disability;[28]
- The passenger needs the service animal as an accommodation for air travel and/or activity at the passenger's destination;
- The provider of the letter is a licensed mental-health professional and the passenger is under the individual's professional care; and
- The date and type of mental health professional's license and the state or other jurisdiction in which the license was issued. (§ 382.117(e)(1) through (e)(4)).

For more information on traveling with service animals see Chapter 3: Assisting Air Travelers With Disabilities Planning a Trip, Section D, Service Animals and Appendix III Guidance Concerning Service Animals.

Familiarize Yourself With the Law

Knowledge of the Air Carrier Access Act (ACAA) and its implementing regulations (14 CFR part 382) is important so that you understand your rights and responsibilities, are able to ask the right questions, and share the most useful information with carriers. Some passengers with disabilities bring a copy of the regulations with them when they travel to have the primary resource readily available. Carriers must maintain a copy of Part 382 at each airport they serve and make the copy available for review upon request. (§ 382.45).

Passenger Complaints

Be aware that if you have a disability-related complaint or concern and carrier personnel do not immediately resolve the issue or provide the accommodation, the carrier must make a Complaints Resolution Official (CRO) available to you. This requirement applies to carriers providing scheduled service or nonscheduled service using aircraft with 19 or more passenger seats. A U.S. carrier must make a CRO available at each airport it serves during all times it is operating at that airport. Foreign carriers must make a CRO available at each airport serving flights that begin or end at a U.S. airport. (§ 382.151(b)). The CRO can be made available in person or by telephone, and must be provided at no cost to the passenger.

If you have a hearing impairment, the carrier must permit you to communicate with a CRO using a Text Telephone (TTY) or a similarly effective technology. Furthermore, the carrier must make the CRO service available to you in the languages it makes services available to the general public. (§ 382.151(b)).

If you make a written complaint, it is helpful to (1) State whether a CRO was contacted when the matter arose, (2) provide the name of the CRO and the date of the contact, if available, and (3) enclose any written response received from the CRO. (§ 382.155(b)).

Resources for Air Travelers With Disabilities

Department of Transportation (DOT) Web Site

DOT posts useful information for all consumers, including air travelers with disabilities, on its Web site at *http://airconsumer.dot.gov/pubs.htm*.

Other Useful Web Links

The following Web links also are available to air travelers with disabilities:

- A list of frequently asked questions and answers (*http://airconsumer.dot.gov/SA_Disability.htm*)
- The full text of Part 382 (*http://airconsumer.dot.gov/SA_Disability.htm*)
- A list of recent DOT enforcement orders related to the ACAA (*http://airconsumer.dot.gov/SA_Disability.htm*)
- A listing of conflict of law waiver determinations (*http://www.regulations.gov_under Docket Number DOT–OST–2008–0272*)
- A listing of equivalent alternative determinations (*http://www.regulations.gov_under Docket Number DOT-OST-2008-0273*)

DOT Disability Hotline

The DOT toll-free telephone hotline system is used to provide general information to consumers about the rights of air travelers with disabilities, respond to requests for consumer information, and assist air travelers with time-sensitive, disability-related issues. The hours for the hotline are 9 a.m. to 5 p.m. eastern time, Monday through Friday except federal holidays. Air travelers with a disability-related service concern or issue may call the hotline at 1–800–778–4838 (voice) or 1–800–455–9880 (TTY) to receive assistance. Air travelers who would like the DOT to investigate a complaint about a disability issue must submit their complaint in writing or the web. (*http://airconsumer.dot.gov/hotline.htm*).

Carriers' Resources

Always check carrier resources such as Web sites and contact the carrier's reservation personnel when seeking information about services and equipment when accessing air transportation.

Transportation Security Administration (TSA)

Consumers with disabilities who have concerns about the airport screening process or other aviation security issues may call the TSA toll-free at 1–855–787–2227 or email that agency at *TSA-ContactCenter@dhs.gov.* For additional information, go to *http://www.tsa.gov/travelers/airtravel/disabilityandmedicalneeds/tsa_cares.shtm.*

Appendix III Airline Management-Related Issues

Airline Management-Related Issues

Appendix III highlights provisions of the Air Carrier Access Act (ACAA) and the implementing regulations in Part 382 that are the specific responsibility of carrier management as opposed to personnel who deal with the traveling public. Cross references to chapters of and other appendixes to this manual are provided for more detailed explanations of these requirements. In this appendix, the word ''you'' refers to carrier management and ''your carrier'' refers to the carrier you manage.

Discrimination Is Prohibited

You must ensure that your carrier (either directly or indirectly through its contractual, licensing, or other arrangements) does not discriminate against qualified individuals with a disability by reason of such disability in the provision of air transportation. (§ 382.11(a)(1)). In addition, you are responsible for ensuring that not only your own employees comply with the ACAA and Part 382, but also employees of any company or entity performing functions on behalf of your carrier. (§ 382.15).

Specifically, you must ensure that your carrier does not:

- Require a passenger with a disability to accept special services, such as pre-boarding not requested by the passenger. (§ 382.11(a)(2)).
- Exclude a qualified individual with a disability from or deny that individual the benefit of air transportation or related services that are available to other individuals, even if there are separate or different services available for passengers with a disability, except as provided by Part 382. (§ 382.11(a)(3)).

[27] Your carrier may, at its discretion, accept from the passenger with a disability documentation from his or her licensed mental health professional that is more than 1 year old. The DOT encourages carriers to consider accepting ''outdated'' documentation in situations where such passenger provides a letter or notice of cancellation or other written communication indicating the termination of health insurance coverage, and his/her inability to afford treatment for his or her mental or emotional disability.

[28] Referenced in the Diagnostic and Statistical Manual of Mental Disorders—Fourth Edition (DSM IV).

• Take actions adverse to passengers with a disability if they or someone on their behalf assert their rights under the ACAA or Part 382. (§ 382.11(a)(4)).

• Limit the number of passengers with a disability who travel on a flight.[29] (§ 382.17).

You should be aware that your carrier must modify policies, practices, and facilities when needed to provide nondiscriminatory service to a particular individual with a disability, consistent with the standards of Section 504 of the Rehabilitation Act, as amended. This requirement is in addition to your carrier's general nondiscrimination obligation, and is in addition to its duty to make specific accommodations under Part 382. Your carrier is not required to make modifications that would constitute an undue burden or would fundamentally alter its program. (§ 382.13(c)).

Refusal of Transportation

You must ensure that your carrier does not refuse to provide transportation to a passenger with a disability based on his or her disability unless specifically permitted by Part 382. (§ 382.19(a)). Your carrier must not refuse transportation to a passenger with a disability because the person's disability results in appearance or involuntary behavior that may offend, annoy, or inconvenience others. (§ 382.19(b)).

Safety Considerations

Neither the ACAA nor Part 382 requires you to disregard applicable Federal Aviation Administration (FAA) or other government safety regulations. (§ 382.7(g)).

Your carrier may refuse to provide transportation to *any* passenger on the basis of safety and if carriage would violate FAA, Transportation Security Administration (TSA) or applicable foreign government requirements. (§ 382.19(c)) Your carrier may refuse transportation to a passenger with a disability on the basis of safety if your carrier is able to demonstrate that the passenger poses a direct threat. (§ 382.19(c)(1)). Direct threat means a significant risk to the health or safety of others that cannot be eliminated by a modification of policies, practices or procedures or providing auxiliary aids or services. (§ 382.3). You should be aware that in exercising this authority your carrier may not act inconsistently with Part 382 or it may be subject to enforcement action. (§ 382.19(c)(3) and (c)(4)).

Your carrier may deny boarding to a passenger who wishes to use a passenger-supplied electronic respiratory assistive devices onboard the aircraft, if the passenger does not comply with the conditions for acceptance of such devices as required in Part 382. (§ 382.133(f)(3)). The specific requirements concerning the evaluation and use of passenger-supplied electronic respiratory assistive devices onboard the aircraft and the carriers who must comply with these requirements are discussed in Chapter 3, Section B, Information about the Aircraft; Chapter 5, Section D, Stowing and Treatment of Assistive Devices, and below in this appendix under the topic Services and Equipment: Passenger-supplied Electronic Respiratory Assistive Devices.

Written Explanation for Refusal of Transportation

When your carrier refuses to provide transportation to a passenger on his or her originally-scheduled flight on a basis relating to the individual's disability, your carrier must provide the passenger with a written statement of the reason within 10 calendar days of the refusal of transportation. The statement must include the specific basis for your carrier's refusal to transport the passenger. (§ 382.19(d)).

No Charge for Accommodating Passengers With a Disability

Unless otherwise specified under Part 382, your carrier cannot impose charges for providing facilities, equipment, or services that it is required to provide under Part 382 to passengers with a disability. (§ 382.31).

Indirect Air Carriers

If you are an indirect air carrier that provides facilities or services for other carriers that are covered by §§ 382.17 through .157, you must do so in a manner consistent with those regulations. (§ 382.11(b)).

Contractors and Travel Agents

You should be aware that your carrier must ensure that your contractors comply with Part 382 when providing services to the public (including airports where applicable) on behalf of your carrier just as if your carrier was performing the function itself. In addition, your carrier must include an assurance of compliance with Part 382 in its contracts with those contractors. This assurance must commit the contractor to comply with all applicable provisions of Part 382 that are performed on your carrier's behalf and require the contractor to implement directives issued by your Complaints Resolution Officials (CRO). Noncompliance with this assurance is a material breach of the contract on the contractor's behalf. (§ 382.15(a) and (b)).

If you are a U.S. carrier, you must also include an assurance of compliance in your carrier's contracts or agreements of appointment with U.S. travel agents. Your carrier is not required to include such an assurance in contracts with foreign travel agents. (§ 382.15(c)).

You must monitor a contractor's performance to ensure the contractor complies with Part 382 and you must enforce the assurances in your carrier's contracts with those contractors. It is not a defense against a Department of Transportation (DOT) enforcement action that your carrier's noncompliance with Part 382 resulted from a contractor's action or nonaction. (§ 382.15(d) and (e)).

Accessibility of Airport Facilities

Airports Located in the United States

You should be aware that all terminal facilities and services owned, leased, or controlled by your carrier at a U.S. airport, including parking and ground transportation, must be readily accessible to and usable by individuals with disabilities including individuals who use wheelchairs. You are deemed to comply with this obligation if the facilities meet certain requirements applying to places of public accommodation. (§ 382.51(a)(1)). The requirements are those of the Americans with Disabilities Act (ADA) Accessibility Guidelines (ADAAG) as incorporated in Department of Justice (DOJ) ADA regulations implementing Title III of that law.

In addition, your carrier must ensure that intra- and inter-terminal transportation systems, such as moving sidewalks, shuttle vehicles, and people movers, that are owned, leased, or controlled by your carrier, comply with the applicable DOT ADA rules (49 CFR parts 37 and 38)). (§ 382.51(a)(3)).

Your carrier must ensure that there is an accessible route (one meeting the requirements of the ADAAG) between the gate and boarding area when an accessible passenger lounge or level-entry boarding and deplaning is not available to and from an aircraft. For example, there must be an accessible path on the tarmac between the gate and the aircraft when level-entry boarding is not available. (§ 382.51(a)(2)).

Contracts and leases between your carrier and airport operators concerning the use of airport facilities must describe your airport accessibility responsibility under Part 382 and that of the airport operator under applicable section 504 and ADA rules of the DOT and DOJ. (§ 382.51(a)(4)).

Airports Located in a Foreign Country

Your carrier must ensure that passengers with a disability can readily use all terminal facilities your carrier owns, leases, or controls at a foreign airport. (§ 382.51(b)). This requirement applies to foreign carriers only at terminal facilities that serve flights covered by § 382.7.

Be aware that your carrier must ensure that a passenger with a disability is able to move readily through the terminal facilities to get to or from the gate and any other area from which passengers board aircraft your carrier uses for such flights. This includes the tarmac between the gate and the aircraft when an accessible passenger lounge to and from an aircraft or level-entry boarding to and deplaning from an aircraft is not available. (§ 382.51(b)(1)). Your carrier may meet this obligation through any combination of facility accessibility, auxiliary aids, equipment, the assistance of personnel, or other means consistent with ensuring the safety and dignity of the passenger. (§ 382.51(b)(2)).

Restrictions

You must ensure that your carrier does not subject passengers with disabilities to restrictions that do not apply to other passengers except as otherwise permitted by Part 382. Restrictions your carrier may not impose on passengers with disabilities include the following—

(1) Restricting the movements of individuals with disabilities within terminals;

(2) Requiring passengers with disabilities to remain in a holding area or other location

[29] The DOT has received Conflict of Laws waiver requests from some foreign carriers asserting that § 382.17 conflicts with the European Aviation Safety Agency's Joint Aviation Regulation–OPS 1.260. Visit *http://www.regulations.gov/*, select ''Agency Documents,'' and enter ''DOT–OST–2008–0272'' to view Conflict of Laws waiver requests.

to receive transportation, services, or accommodations;

(3) Mandating separate treatment for individuals with disabilities except as required or permitted under Part 382 or other applicable Federal requirements;

(4) Making passengers sit on blankets on the aircraft; or

(5) Making passengers with disabilities wear badges or other special identification. (§ 382.33).

See Chapter 4, Section A, Accessibility of Terminal Facilities and Services, for more information on this topic.

Telephone Reservation and Information Services

U.S. Carriers

You should be aware that if your carrier provides a telephone reservation and information service to the public, you must make that service available to individuals who use a text telephone (TTY) (by your own TTY, voice relay (chat screen), or other available technology) to permit individuals with hearing impairments to obtain this information. (§ 382.43(a)).

Foreign Carriers

A foreign carrier must have met the TTY requirements that apply to U.S. carriers by May 13, 2010. (§ 382.43(a)(5)). However, these requirements apply only with respect to information and reservation services for flights covered by § 382.7. TTY services apply only with respect to flights for which reservation telephone calls from the United States are accepted.

Exception

The TTY requirements do not apply to carriers in any country in which the telecommunications infrastructure does not readily permit compliance. (§ 382.43(b)).

See also Chapter 3, Section E, Accommodations for Air Travelers with Hearing Impairments, and Chapter 4, Section D, Accommodations for Air Travelers with Vision or Hearing Impairments.

Advance Notice and Reservation System

Your carrier's reservation and other administrative systems must ensure that when a passenger provides the required advance notice for services and accommodations, the notice is communicated, clearly and on time, to the personnel responsible for providing the requested service or accommodation. (§ 382.27(e)). See Chapter 3, Section A, Advance Notice.

Passenger-Supplied Electronic Respiratory Assistive Devices

You should be aware that U.S and foreign carriers (except on-demand air taxi operators) are required to permit passengers with a disability to use a passenger-supplied electronic respiratory assistive device onboard aircraft under specified conditions. (§ 382.133). Chapter 3, Section A, Advance Notice, and Section B, Information about the Aircraft, discuss advance notice requirements and the information your carrier must provide during the reservation process to a passenger with a disability who wishes to use such devices during a flight.

Service Animals

You should be aware that regardless of your carrier's policies with respect to pets, your carrier must permit a service animal used by a passenger with a disability to accompany the passenger on his or her flight. (§ 382.117(a)). A foreign carrier is only required to carry dogs as service animals (§ 382.117(f)) except on codesharing flights with U.S. carriers.

At a U.S. airport facility that you own, lease, or control and in cooperation with the airport operator and in consultation with local service animal training organizations, your carrier must provide animal relief areas for service animals that accompany passengers departing, connecting, or arriving at such airports on your flights. (§ 382.51(a)(5)).

See Chapter 3, Section D, Service Animals and Appendix III, Guidance Concerning Service Animals. See also, Chapter 5, Section B, Seating Assignments and Accommodations.

Aircraft Accessibility

When ordering, purchasing, or leasing aircraft, you should consider that Part 382 requires the following features on an aircraft:

- Movable or removable aisle armrests (aircraft with 30 or more passenger seats) (§ 382.61);
- Priority space in the passenger cabin for a passenger's manual, folding wheelchair (aircraft with 100 or more passenger seats) (§ 382.67);
- Accessible lavatories (aircraft with more than one aisle in which lavatories are provided) (§ 382.63);
- On-board wheelchairs (aircraft with more than 60 passenger seats and an accessible lavatory) (§ 382.65); and
- In-flight audio-visual services (§ 382.69).

Your carrier must maintain aircraft accessibility features in proper working order. (§ 382.71(a)). In addition, any replacement or refurbishing of the aircraft cabin must not reduce existing accessibility to a level below that required under Part 382 for new aircraft. (§ 382.71(b)).

These aircraft accessibility requirements and the compliance deadlines for both U.S. and foreign carriers are discussed in detail in Chapter 5, Section, A, Aircraft Accessibility.

Seating Accommodations

You should be aware that, under certain circumstances, your carrier must provide certain seating accommodations if a passenger self-identifies as a passenger with a disability and the type of seating accommodation exists on the aircraft. (§§ 382.81 and 382.85). If your carrier provides advance seat assignments, it may employ either the block seating method or the priority seating method. Each method requires some advance notice on the part of the passenger with a disability to guarantee the seating accommodation. (§§ 382.83 and 382.85).

You should select an adequate reservation system to meet your carrier's needs, ensure proper administration of the reservation system, and provide employee training with respect to the reservation system and the requirements under Part 382 for providing seating accommodations for passengers with disabilities. If your carrier wishes to use a method of providing seat assignments to passengers with disabilities other than the methods provided for in Subpart E of Part 382, it must receive written approval from DOT. (§ 382.83(d)).

If your carrier does not provide advance seat assignments, passengers who identify themselves as passengers with a disability in need of a seating accommodation must be allowed to pre-board before all other passengers, including other passengers entitled to pre-board, and select the seat assignment that best meets their needs. (§§ 382.83(c) and 382.85(b)). You should note that your carrier must offer preboarding to passengers with a disability who self-identify at the gate as needing additional time or assistance. (§ 382.93(c)).

Your carrier is not required to provide more than one seat per ticket or a seat in a class of service other than the one the passenger has purchased to accommodate a passenger with a disability in need of a seat assignment to accommodate his or her disability. (§ 382.87(f)).

Your carrier must comply with all FAA and applicable foreign government safety requirements, including exit-seating requirements, when responding to requests from passengers with a disability for seating accommodations. (§ 382.87(b)).

See Chapter 5, Section B, Seating Assignments and Accommodations, for more information on this topic.

Security Screenings

You should be aware that all passengers including those with disabilities are subject to TSA security screening requirements at U.S. airports. Passengers at foreign airports, including those with disabilities, may be subject to security screening measures required by the law of the country where the airport is located. (§ 382.55(a)).

If your carrier wants to go beyond mandated security screening procedures, it must conduct the security screening of a passenger with a disability in the same manner as any other passenger. (§ 382.55(b)).

See Chapter 4, Section B, Security Screening for Air Travelers with a Disability.

Services and Equipment

Boarding Assistance in General

If a passenger with a disability requests assistance getting on or off an airplane, or your carrier or the airport operator offers such assistance, and the passenger consents to the type of boarding or deplaning assistance offered, assistance must be promptly provided. The type of assistance offered must include the services of personnel and the use of wheelchairs, accessible motorized carts, ramps, or mechanical lifts as required under Part 382. (§ 382.95(a)).

You should be aware that a carrier operating aircraft with 19 or more passenger seats at U.S. commercial service airports with 10,000 or more annual enplanements must provide boarding and deplaning assistance to passengers with a disability using lifts or ramps if level-entry loading bridges or accessible passenger boarding lounges are not

available. (§ 382.95(b)). However, boarding assistance using a lift or other means of level-entry boarding is not required on:

- Aircraft with fewer than 19 passenger seats;
- Float planes;
- The following 19-seat capacity aircraft models that are unsuitable for boarding assistance using a lift: the Fairchild Metro, the Jetstream 31 and 32, the Beech 1900 (C and D Models), and the Embraer EMB–120; or
- Any other aircraft model the DOT determines to be unsuitable for boarding and deplaning assistance by lift; ramp, or other suitable device. (§ 382.97).

You should be aware that, although U.S. and foreign carriers must provide or ensure the provision of boarding and deplaning assistance at foreign airports on covered flights, level-entry boarding is not required. However, whenever level-entry boarding and deplaning assistance is not required, your carrier must still assist passengers with a disability in boarding and deplaning the aircraft if any such means is available. (§ 382.101).

Your carrier must train employees in the use of the boarding assistance equipment and procedures regarding the safety and dignity of passengers receiving boarding assistance. (§ 382.141(a)(1)(iii) and (b)).

See Chapter 5, Section C, Boarding and Deplaning Assistance, for more information on this topic. See also Chapter 8: Personnel Training, for additional information on employee/contractor training requirements.

Boarding and Deplaning Assistance Agreements With U.S. Airport Operators

U.S. and foreign carriers. Your carrier must negotiate in good faith with the operator of any U.S. commercial airport with 10,000 or more annual enplanements to ensure the provision of lifts for boarding and deplaning where level-entry loading bridges are not available. (§ 382.99(a)).

U.S. carriers. Your carrier must have a written, signed agreement with the airport operator allocating responsibility for meeting the boarding and deplaning assistance requirements of Part 382, subpart G. (§ 382.99(b)).

Foreign carriers. Your carrier must have a written, signed agreement with the airport operator allocating responsibility for meeting the boarding and deplaning assistance requirements of Part 382, Subpart G with respect to all covered aircraft by May 13, 2010. (§ 382.99(b)). Foreign carriers serving a particular airport may be able to join existing agreements among the airport and U.S. carriers serving it, rather than establishing a new agreement.

The written agreement with a U.S. airport must specify that accessible boarding and deplaning for passengers with a disability will actually be provided before May 13, 2011. (§ 382.99(c)).

U.S. and foreign carriers. The written agreement may require passengers who want boarding and deplaning assistance requiring use of a lift to check in 1 hour before the standard check-in time for the flight. (§ 382.99(d)). You should be aware the agreement must ensure all lifts and other accessibility equipment are maintained in working order. (§ 382.99(e)).

Note: All carriers and airport operators are jointly and severally (individually) responsible to implement the agreements completely and in a timely manner. You must make the agreements available to DOT upon request. (§ 382.99(f) and (g)).

Boarding, Deplaning, and Connecting Assistance at Foreign Airports

You should be aware that at foreign airports where the airport operator has the responsibility for boarding, deplaning, or connecting assistance, U.S. and foreign carriers can rely on the airport operator's services to meet Subpart G of Part 382. (§ 382.105). However, if the services provided by the airport operator are not sufficient to meet these requirements, your carrier must supplement the airport operator's services. If your carrier believes it is legally prohibited from supplementing the airport operator's services, it may apply for a conflict of law waiver under § 382.9.

Storing Wheelchairs and Other Assistive Devices in the Cabin

Your carrier must allow passengers with a disability to stow the following mobility aids and assistive devices inside the aircraft cabin provided they can be stowed consistent with FAA, PHMSA, TSA or applicable foreign government requirements concerning safety, security, and hazardous materials:

- Manual wheelchairs, including folding or collapsible wheelchairs;
- Other mobility aids, such as canes, crutches and walkers; and
- Other assistive devices for stowage or use in the cabin, such as prescription medications and the devices needed to administer them; vision-enhancing devices; and portable oxygen concentrators (POC), ventilators, and respirators that use nonspillable batteries if they comply with applicable safety, security and hazardous materials rules. (§ 382.121(a)).

Note: The requirements concerning the in-flight use of passenger-supplied electronic devices that assist with respiration are discussed later in this appendix. (§ 382.133).

Your carrier is not required to permit passengers to bring electric wheelchairs into the aircraft cabin.

You should be aware that certain aircraft must have priority space in the cabin to stow at least one typical adult-sized folding, collapsible, or break-down manual wheelchair. (§ 382.67(a)). See Chapter 5, Section A, Aircraft Accessibility, for more information about this requirement, including the aircraft to which it applies.

Note: Your carrier must not count mobility aids and other assistive devices brought on board the aircraft by a passenger with a disability toward the limit for passenger carry-on baggage. (§ 382.121(b)).

On-Board Wheelchairs

When required, on-board wheelchairs must be equipped with specific features and be designed to be compatible with the maneuvering space, aisle width, and seat height of the aircraft on which they are to be used, and to easily be pushed, pulled, and turned in the cabin environment by carrier personnel. (§ 382.65)(c)). See Chapter 5, Section A, Aircraft Accessibility, for more information about this requirement, including the aircraft to which it applies.

Wheelchairs Unable To Be Stowed in the Cabin as Carry-On

Know that your carrier must stow mobility aids, including wheelchairs, and other assistive devices in the baggage compartment with priority over other cargo and baggage if an approved stowage area is not available in the cabin or the items cannot be transported in the cabin consistent with FAA, PHMSA, TSA, or applicable foreign government requirements. (§ 382.125(a) and (b)). Except as otherwise provided in Part 382, your carrier may not charge for facilities, equipment, or services required under Part 382 to be provided to passengers with a disability. Therefore, your carrier cannot charge for a wheelchair or other mobility or assistive device that exceeds the weight limit on checked baggage. (§ 382.31(a)) and 382.121(b).

However, DOT recognizes there may be some circumstances in which it is not practical to stow an electric wheelchair or some other assistive device in the baggage compartment, and you are not required to do so if it would constitute an undue burden. (§ 382.13(c)). Only devices that fit and meet all applicable hazardous materials and other safety regulations need be carried.

When a passenger's wheelchair, other mobility aids, or other assistive devices cannot be stowed in the cabin as carry-on baggage, a carrier must ensure these items are timely checked and returned as close as possible to the door of the aircraft (unless the passenger requests the items be returned at the baggage claim area) so that the passenger with a disability can use his or her own equipment, where possible, consistent with Federal regulations concerning transportation security and the transportation of hazardous materials. (§ 382.125(c)(1) and (c)(2)).

To ensure the timely return of a passenger's wheelchair, other mobility aids or other assistive devices, they must be among the first items retrieved from the baggage compartment. (§ 382.125(d)).

Battery-Powered Devices

A carrier must accept a passenger's battery-powered wheelchair or other similar mobility device, including the battery, as checked baggage unless baggage compartment size and aircraft airworthiness considerations prohibit it. (§ 382.127(a)).

Check-in and advance notice requirements (for passengers with battery-powered mobility devices)

Aircraft with 60 or more passenger seats. Your carrier may require that a passenger who wants you to transport his or her battery-powered wheelchair or similar mobility device check in for the flight 1 hour before the check-in time for the general public. However, even if the passenger does not check in within this time, your carrier must make a reasonable effort to accommodate the passenger and transport the battery-powered wheelchair or other similar mobility aid provided it would not delay the flight. (§ 382.127(b)).

Aircraft with fewer than 60 passenger seats. Your carrier may require that a passenger with a disability provide up to 48 hours' advance notice and check in 1 hour before the check-in time for the general public if the passenger wants your carrier to transport his or her electric (battery-powered) wheelchair. (§ 382.27(c)(4)).

Battery Handling (for Wheelchairs, Scooters, and Other Mobility Devices Using Traditional Spillable or Nonspillable Battery Technology)

Your carrier must not require that the battery be removed and separately packaged if the—

- Manufacturer has labeled the battery on a wheelchair or other similar mobility device as nonspillable, or
- For a spillable battery, the battery-powered wheelchair can be loaded, stored, secured, and unloaded in an upright position.

However, your carrier must remove and package separately any battery that (1) is inadequately secured to a wheelchair or (2) if the battery is spillable and it is contained in a wheelchair that cannot be loaded, stowed, secured and unloaded in an upright position consistent with DOT hazardous materials regulations. A damaged or leaking battery should not be transported. (§ 382.127(c)).

Finally, your carrier must not disconnect the battery on a wheelchair or other mobility device if the battery is nonspillable and it is completely enclosed within a case or compartment integral to the design of the device unless required to do so under FAA, PHMSA, or applicable foreign government safety regulations. (§ 382.127(e)).

When it is necessary to detach a battery from a wheelchair or other mobility device, a carrier must provide packaging for the battery, if requested, and package the battery consistent with appropriate hazardous materials regulations. However, your carrier is not required to use packaging materials or devices you do not normally use for this purpose. (§ 382.127(d)). Your carrier must not charge for such packaging. (§ 382.31(a)). Your carrier also must not drain batteries. (§ 382.127(f)).

Passenger-Supplied Electronic Respiratory Assistive Devices

U.S. Carriers Conducting Passenger Service (Except for On-Demand Air Taxi Operators)

You should be aware that, subject to the conditions below, your carrier must permit a passenger with a disability to use the following passenger-supplied electronic respiratory assistive devices in the passenger cabin during *all phases of flight* on all aircraft designed with more than 19 passenger seats:

- FAA-approved POC,
- Continuous positive airway pressure (CPAP) machines;
- Respirators; and
- Ventilators.

Your carrier must allow such devices to be used in the cabin during air transportation if they—

- Meet applicable FAA requirements for medical portable electronic devices,
- Display a manufacturer's label indicating such compliance, and
- Can be stowed and used in the cabin consistent with applicable TSA, FAA, and PHMSA regulations. (§ 382.133(a)(1) and (a)(2)).

Foreign Carriers Conducting Passenger Service (Except Operations Equivalent to a U.S. Carrier On-Demand Air Taxi Operation)

A foreign carrier must permit passengers with a disability to use the electronic respiratory assistive devices listed above (a POC of a kind equivalent to an FAA-approved POC for U.S. carrier, CPAP machine, respirator, or ventilator,) in the passenger cabin of aircraft originally designed with a maximum passenger seating capacity of more than 19 seats during operations to, from or within the United States. (§ 382.133(b)).

Your carrier must permit onboard use of such devices if they—

- Meet requirements for medical portable electronic devices established by your foreign government (or if no such requirements exist you may apply applicable FAA requirements for U.S. carriers),
- Have a manufacturer's label indicating such compliance, and
- The device can be stowed and used in the cabin consistent with TSA, FAA and PHMSA regulations and the safety and security regulations of your foreign government. (§ 382.133(b)(1) through (b)(3)).

For more information on this topic see Chapter 5, Section E, Services and Information Provided in the Cabin. For a discussion about the specific information your carrier must provide during the reservation process to a passenger with a disability who wishes to use a passenger-supplied electronic respiratory assistive device during a flight see Chapter 3, Section B, Information about the Aircraft.

Baggage Liability Limits

On domestic U.S. flights the baggage liability limits (14 CFR part 254, Domestic Baggage Liability Limits) do not apply to loss, damage, or delay concerning wheelchairs, other mobility aids, or other assistive devices. Rather, the basis for calculating the compensation for lost, damaged, or delayed mobility aids, including wheelchairs, or other assistive devices must be the original price of the device. (§ 382.131).

Note: Baggage liability limits for international travel, including flights of U.S. carriers, are governed by the Montreal Convention and other international agreements instead of 14 CFR part 254.

Your carrier also must not require a passenger with a disability to sign a waiver of liability for damage to or loss of a wheelchair or other assistive device, although your personnel may make notes about preexisting damage or conditions of these items to the same extent you do this for other checked baggage. (§ 382.35(b)).

Timely and Complete Access to Information at the Airport

U.S. Carriers

Your carrier must ensure that passengers who identify themselves as persons needing visual or hearing assistance receive *prompt* access to the same information that you provide to other passengers at each gate, ticketing area, and customer service desk that you own, lease, or control at any U.S. or foreign airport. However, your carrier is not required to provide information if it would interfere with employee safety and security duties under applicable FAA and foreign regulations. (§ 382.53(a)(1)). This requirement applies to information on a wide variety of subjects such as flight safety, ticketing, schedule changes and gate assignments. (§ 382.53(b)).

Foreign Carriers

Foreign carriers must make the same information available to passengers who identify themselves as needing visual or hearing assistance at each gate, ticketing area, and customer service desk that you own, lease, or control at any U.S. airport. At foreign airports, a foreign carrier must make this information available only at gates, ticketing areas, or customer service desks that you own, lease, or control and only for flights that begin or end in the United States. (§ 382.53(a)(2)).

See Chapter 4, Section D, Accommodations for Air Travelers with Vision or Hearing Impairments.

Timely and Complete Access to Information on the Aircraft

General Information

You should be aware that your carrier must ensure that passengers with a disability who identify themselves as needing visual or hearing assistance have *prompt* access to the same information provided to other passengers on the aircraft. However, your carrier is not required to provide information if it would interfere with crewmember safety duties under applicable FAA and foreign regulations. (§ 382.119(a)). This requirement includes information on a wide variety of subjects such as flight safety, procedures for takeoff and landing, and flight delays. (§ 382.119(b)).

In addition, if your carrier uses *new* audio-visual displays to convey this information to passengers with hearing impairments it must provide high-contrast captioning. (§ 382.69).

Safety Briefings for Passengers With Hearing Impairments

If your carrier presents safety briefings to passengers using audio-visual displays, the presentation must be accessible to passengers with hearing impairments. (§ 382.115(e)).

See Chapter 5, Section E, Services and Information Provided in the Cabin and Section F, Safety Briefings.

Complaint Procedures

Complaints Resolution Officials (CROs)

Carriers providing service using aircraft with 19 or more passenger seats must designate one or more CROs to handle disability-related complaints. (§ 382.151(a)). A U.S. carrier must make a CRO available at each airport it serves during all times it operates at that airport. A foreign carrier must make a CRO available at each airport serving flights it operates that begin or end at a U.S. airport. 382.151(b).

Responding to Complaints

You should be aware that your carrier must respond to both oral and written complaints from passengers with a disability.

Complaints made directly to your CRO. If a complaint is made directly to your CRO before a potential violation has occurred your CRO must take prompt action to ensure compliance with Part 382. If the alleged violation has already occurred and your CRO agrees that Part 382 was violated, your CRO must respond in writing with a summary of the facts and what steps, if any, your carrier proposes to take in response to the violation. If your CRO does not find that Part 382 was violated, your CRO must provide a written statement summarizing the facts and the reasons for the determination. In either case, the response must inform the passenger of his or her right to pursue DOT enforcement action. If possible, your CRO should provide the response to the passenger at the airport. If this is not possible, the response must be forwarded to the passenger within 30 days. (§ 382.153).

Written complaints made after a trip. Your carrier must provide a written response to the complaining passenger within 30 days of receiving their written complaint. The response must describe how your carrier resolved the complaint and must specifically admit or deny that a violation of Part 382 occurred. (§ 382.155(d)). Depending on your carrier's determination, the response to a written complaint must include the following:

- If your carrier agrees that a violation has occurred, it must provide a written statement to the complainant summarizing the facts and stating what steps, if any, your carrier proposes to take in response to the violation. (§ 382.155(d)(1)).
- If your carrier denies that a violation occurred, the written response must include a summary of the facts and your carrier's reasons under Part 382 for making its determination. (§ 382.155(d)(2)).
- Information about the complainant's right to pursue DOT enforcement action under Part 382. (§ 382.155(d)(3)).

Recording, Categorizing, and Reporting Disability-Related Complaints

A carrier covered by Part 382 that conducts passenger operations with at least one aircraft having a designated seating capacity of more than 60 passengers on flights to, from, or in the United States must categorize, record, and report annually to DOT the written disability-related complaints received by your carrier. (§ 382.157). This requirement applies to foreign carriers only with respect to disability-related complaints associated with any flight segment beginning or ending in the United States. (§ 382.157(b)).

Your carrier must have a system for categorizing and recording disability-related complaints by the passenger's type of disability and the nature of the passenger's complaint. (§ 382.157(c)). In addition, your carrier must submit an annual report on the last Monday in January of every year summarizing the disability-related complaints received during the previous year. This annual report must be submitted online using the form specified at the Web site address *http://382reporting.ost.dot.gov* unless your carrier demonstrates undue hardship if not permitted to submit the information via paper copies, disks or email. (§ 382.157(d)). If DOT approves your carrier's request not to submit the annual report through the Web site address above, it must use the form in appendix A to Part 382. (§ 382.157(h)).

The recording and reporting responsibilities discussed above also apply to carriers in a codeshare relationship. (§ 382.157(f)).

See Chapter 6: Assisting Air Travelers with Disabilities with Their Complaints.

Employee Training

You should be aware that proper training of carrier personnel is critical to compliance with the ACAA and Part 382. The training requirements in Part 382 vary with aircraft size. A carrier operating aircraft with 19 or more passenger seats must train all personnel who deal with the traveling public, as appropriate to the duties of each employee, to proficiency in certain specific areas such as applicable regulations and carrier procedures on providing air travel for passengers with disabilities, and provide training in other areas such as appropriate communications as outlined in Part 382. (§ 382.141(a)). Your carrier must provide, or ensure that your contractor's provide, training to contract employees who deal directly with the traveling public that is tailored to the employees' functions. (§ 382.141(a)(6)). Your carrier must consult with organizations representing persons with disabilities in your home country when developing your training programs and your policies and procedures. (§ 382.141(a)(4)).

A carrier operating aircraft with fewer than 19 passenger seats must provide training for its flight crewmembers and appropriate personnel to ensure that those personnel are familiar with applicable regulations, carrier procedures, and appropriate communication in providing air travel to passengers with a disability and that they comply with Part 382. (§ 382.141(b)).

Chapter 8: Personnel Training, contains a detailed discussion of carrier personnel and contractor training program requirements, including refresher training, as well as the recordkeeping requirements and schedule associated with this training.

Appendix IV FSAT 04–01A Location and Placement of Service Animals on Aircraft Engaged in Public Air Transportation

ORDER: 8400.10

APPENDIX: 4

BULLETIN TYPE: Flight Standards Information Bulletin for Air Transportation (FSAT)

BULLETIN NUMBER: FSAT 04–01A

BULLETIN TITLE: Location and Placement of Service Animals on Aircraft Engaged in Public Air Transportation.

EFFECTIVE DATE: 6/24/04

AMENDED DATE: 7/23/04

TRACKING: N/A

APPLICABILITY: This bulletin applies to operations under part 121 and 135.

NOTE: This amended bulletin adds further guidance about ''unusual service animals'' in paragraphs 4 D and E.

1. PURPOSE. This bulletin clarifies the Federal Aviation Administration (FAA) Flight Standards Service's safety and enforcement policy regarding the location and placement of service animals, as defined by the Department of Transportation (DOT) in Title 14 of the Code of Federal Regulations (14 CFR) part 382, Nondiscrimination on the Basis of Disability in Air Travel, for all aircraft operated under 14 CFR parts 121 and 135. This bulletin supplements information contained in Federal Aviation Administration (FAA) Advisory Circular (AC) 120–32, Air Transportation of Handicapped Persons.

2. BACKGROUND.

A. As early as 1977, the FAA recognized the need for guidance regarding the placement and location of service animals on aircraft. AC 120–32 discusses the placement of ''guide dogs'' and states that ''They should be seated in the first row seat of a section next to the bulkhead where there is more room for the dog''. This guidance was issued well before DOT Part 382 was published in 1990. Collaboration among the FAA, the DOT and members of the disabled community during the development of DOT Part 382 ensured that its requirements would be consistent with the AC previously published by the FAA.

B. Flight Standards has recently received questions from air carriers, aviation safety inspectors, airline industry representatives and people with service animals regarding compliance with DOT Part 382 Nondiscrimination on the Basis of Disability in Air Travel as it pertains to the location and placement of service animals on aircraft engaged in public air transportation.

C. On May 9, 2003, DOT issued revised guidance regarding the carriage of service animals affecting all transportation modes, including aviation. If the FAA believes that additional FAA rulemaking or guidance is necessary, the FAA will undertake them, as appropriate. One example of this type of activity is the issuance of this FSAT, which contains Flight Standards' safety and enforcement policy regarding the placement and location of service animals accompanying persons with disabilities on aircraft.

3. SAFETY REVIEW.

A. A review of all available reports regarding commercial aircraft accidents with at least one fatality, in operations under part 121, that occurred between 1/1/1990 and 1/1/2004, contained in the National Transportation Safety Board (NTSB) reporting system, found no references to either a service animal's presence on the aircraft or its placement or location on the aircraft, to have negatively impacted an aircraft evacuation or a particular individual's emergency egress from an aircraft.

B. A review of NTSB Safety Report ''Survivability of Accidents Involving Part 121 U.S. Air Carrier Operations, 1983 Through 2000(NTSB/SR–01/01), also found no references to either a service animal's presence on the aircraft or its placement or

location on the aircraft, to have negatively impacted an aircraft evacuation or a particular individual's emergency egress from an aircraft.

C. Similarly, a review of the NTSB Safety Study, ''Emergency Evacuation of Commercial Airplanes (NTSB/SS–00/01),'' found no references to either a service animal's presence on the aircraft or their placement or location on the aircraft, to have negatively impacted an aircraft evacuation or a particular individual's emergency egress from an aircraft.

4. GUIDANCE. The variety of service animals, as well as the services these animals perform, has certainly become larger in scope since the FAA's policy was first published in 1977. However, after a comprehensive review of available NTSB data, the FAA sees no safety issue that compels the FAA to change its long standing safety and enforcement policy regarding placement and location of service animals on aircraft. Therefore, consistent with DOT part 382 requirements:

A. Placement. A service animal may be placed at the feet of a person with a disability at any bulkhead seat or in any other seat as long as when the animal is seated/placed/curled up on the floor, no part of the animal extends into the main aisle(s) of the aircraft, the service animal is not at an emergency exit seat and the service animal does not extend into the foot space of another passenger seated nearby who does not wish to share foot space with the service animal.

B. Placement of lap held service animals. Lap held service animals (such as a monkey used by a person with mobility impairments) are discussed in the preamble to DOT Part 382 Nondiscrimination on the Basis of Disability in Air Travel, issued in 1990 (FR Vol. 55, No. 44 361990, pg. 8042). They are service animals that need to be in a person's lap to perform a service for that person. This service animal may sit in that person's lap for all phases of flight including ground movement, take off and landing provided that the service animal is no larger than a lap-held child (a child who has not reached his or her second birthday).

C. Documentation. One type of service animal is an animal used for emotional support. The presence of such an animal is found to be medically necessary for the passenger traveling with the animal. Under DOT rules, and outlined clearly in DOT Guidance Concerning Service Animals, published on May 9, 2003, an air carrier may require documentation regarding the medical need for the presence of an emotional support animal as a condition of permitting the animal to accompany the passenger in the cabin as a service animal.

D. Unusual Service Animals. On May 9, 2003, the Department of Transportation issued Guidance Concerning Service Animals in Air Transportation. Unusual service animals pose unavoidable safety and/or public health concerns and airlines are not required to transport them. Snakes, other reptiles, ferrets, rodents, and spiders certainly fall within this category of animals. The release of such an animal in the aircraft cabin could result in a direct threat to the health or safety of passengers and crewmembers. For these reasons, airlines are not required to transport these types of service animals in the cabin, and carriage in the cargo hold will be in accordance with company policies on the carriage of animals generally.

E. Other unusual animals such as miniature horses, pigs and monkeys should be evaluated on a case-by-case basis. Factors to consider are the animal's size, weight, state and foreign country restrictions, and whether or not the animal would pose a direct threat to the health or safety of others, or cause a fundamental alteration (significant disruption) in the cabin service. If none of these factors apply, the animal may accompany the passenger in the cabin. In most other situations, the animal should be carried in the cargo hold in accordance with company policy.

F. This safety and enforcement policy has been coordinated with AGC–220, Operations and Air Traffic Law Branch.

5. REFERENCES.

A. 14 CFR Part 382, Nondiscrimination on the Basis of Disability in Air Travel, as amended *http://airconsumer.ost.dot.gov/rules/rules.htm*

B. DOT Guidance Concerning Service Animals, May 9, 2003 *http://airconsumer.ost.dot.gov/rules/20030509.pdf*

C. Advisory Circular 120–32, Air Transportation of Handicapped Persons *http://www.faa.gov/avr/afs/cabinsafety/acidx.cfm*

D. DOT Part 382 Nondiscrimination on the Basis of Disability in Air Travel, including preamble, issued 1990, (FR Vol 55, No. 44 361990, pg. 8042) *http://www.faa.gov/avr/afs/cabinsafety/disabilities.cfm*

E. NTSB Accident Database & Synopses *http://www.ntsb.gov/ntsb/query.asp*

F. NTSB Safety Report (NTSB/SR–01/01) ''Survivability of Accidents Involving Part 121 U.S. Air Carrier Operations, 1983 Through 2000'' *http://www.ntsb.gov/publictn/2001/SR0101.pdf*

G. NTSB Safety Study (NTSB/SS–00/01), ''Emergency Evacuation of Commercial Airplanes'' *http://www.ntsb.gov/publictn/2000/SS0001.pdf*

6. ACTION.

A. Each Principal Operations Inspector (POI) and Aviation Safety Inspector—Cabin Safety should make the information contained in this FSAT known to the director of safety or the director of operations, respectively, of each assigned operator under part 121 or part 135.

B. This information may be conveyed by hard copy of this FSAT or by referring the director of safety or the director of operations, as applicable, to the following FAA public web site: *http://www.faa.gov/avr/afs/fsat/fsatl.htm*

7. PROGRAM TRACKING AND REPORTING SUBSYSTEM (PTRS). Document the conveyance of the information contained in this FSAT for each air carrier affected:

A. Use PTRS code 1385.

B. Enter ''FST0401A'' in the National Use Field (without the quotes).

C. Once the POI has accomplished the ACTION in paragraph 6, close out the PTRS.

8. INQUIRIES. This bulletin was developed by AFS–200. Any questions concerning this bulletin should be directed to Nancy Claussen, Flight Standards Service, at (602) 379–4864, ext. 268.

9. EXPIRATION. This bulletin will remain in effect until further notice.

/s/Thomas K. Toula, for
Matthew Schack,
Manager, Air Transportation Division.

[FR Doc. 2012–15233 Filed 7–3–12; 8:45 am]

BILLING CODE 4910–9X–P

FEDERAL REGISTER

Vol. 77 Thursday,

No. 129 July 5, 2012

Part III

Department of Energy

Federal Energy Regulatory Commission

18 CFR Part 40

Revisions to Electric Reliability Organization Definition of Bulk Electric System and Rules of Procedure; Proposed Rule

DEPARTMENT OF ENERGY

Federal Energy Regulatory Commission

18 CFR Part 40

[Docket Nos. RM12–6–000 and RM12–7–000]

Revisions to Electric Reliability Organization Definition of Bulk Electric System and Rules of Procedure

AGENCY: Federal Energy Regulatory Commission, DOE.

ACTION: Notice of proposed rulemaking.

SUMMARY: Under section 215 of the Federal Power Act, the Federal Energy Regulatory Commission (Commission) proposes to approve a modification to the currently-effective definition of ''bulk electric system'' developed by the North American Electric Reliability Corporation (NERC), the Commission-certified Electric Reliability Organization. The revised definition of ''bulk electric system'' removes language allowing for regional discretion in the currently-effective bulk electric system definition. The revised definition establishes a bright-line threshold that includes all facilities operated at or above 100 kV. The modified definition also identifies specific categories of facilities and configurations as inclusions and exclusions to provide clarity in the definition of ''bulk electric system.''

The Commission also proposes to approve: (1) NERC's contemporaneously filed revisions to its Rules of Procedure, which creates an exception procedure to add elements to, or remove elements from, the definition of ''bulk electric system'' on a case-by-case basis; (2) NERC's proposed form entitled ''Detailed Information To Support an Exception Request'' that entities will use to support requests for exception from the ''bulk electric system'' definition; and (3) NERC's proposed implementation plan for the revised ''bulk electric system'' definition.

DATES: Comments are due September 4, 2012.

ADDRESSES: Comments, identified by docket number, may be filed in the following ways:

- *Electronic Filing:* Through *http://www.ferc.gov.* Documents created electronically using word processing software should be filed in native applications or print-to-PDF format and not in a scanned format.
- *Mail/Hand Delivery:* Those unable to file electronically may mail or hand-deliver comments to: Federal Energy Regulatory Commission, Secretary of the Commission, 888 First Street NE., Washington, DC 20426.

Instructions: For detailed instructions on submitting comments and additional information on the rulemaking process, see the Comment Procedures Section of this document.

FOR FURTHER INFORMATION CONTACT:

Susan Morris (Technical Information), Office of Electric Reliability, Division of Reliability Standards, Federal Energy Regulatory Commission, 888 First Street NE., Washington, DC 20426, Telephone: (202) 502–6803;

Nicholas Snyder (Technical Information), Office of Electric Reliability, Division of Logistics & Security, Federal Energy Regulatory Commission, 888 First Street NE., Washington, DC 20426, Telephone: (202) 502–6408;

Robert Stroh (Legal Information), Office of the General Counsel, Federal Energy Regulatory Commission, 888 First Street NE., Washington, DC 20426, Telephone: (202) 502–8473;

William Edwards (Legal Information), Office of the General Counsel, Federal Energy Regulatory Commission, 888 First Street NE., Washington, DC 20426, Telephone: (202) 502–6669.

SUPPLEMENTARY INFORMATION:

139 FERC ¶ 61,247

Issued June 22, 2012.

1. Under section 215 of the Federal Power Act (FPA),[1] the Federal Energy Regulatory Commission (Commission) proposes to approve a modification to the currently-effective definition of ''bulk electric system'' contained in NERC's *Glossary of Terms Used in Reliability Standards* (NERC Glossary) developed by the North American Electric Reliability Corporation (NERC), the Commission-certified Electric Reliability Organization. NERC submitted its petition in response to the Commission's directive in Order No. 743 that NERC develop a revised definition of ''bulk electric system'' using NERC's Reliability Standards development process.[2] The revised definition of bulk electric system:

(a) Removes the basis for regional discretion in the current bulk electric system definition;

(b) Establishes a bright-line threshold so that the ''bulk electric system'' will be facilities operated at 100 kV or higher, if they are Transmission Elements, or connected at 100 kV or higher, if they are Real Power or Reactive Power resources; and

(c) Contains specific inclusions (I1–I5) and exclusions (E1–E4) to provide clarity in the definition that the facilities described in these configurations are included in or excluded from the ''bulk electric system.''

2. The Commission also proposes to approve:

(a) NERC's contemporaneously filed revisions to its Rules of Procedure, which creates an exception procedure to add elements to, and remove elements from the definition of ''bulk electric system'' on a case-by-case basis;

(b) NERC's proposed form entitled ''Detailed Information to Support an Exception Request'' that entities will use to support requests for exceptions from the ''bulk electric system'' definition; and

(c) NERC's proposed implementation plan for the revised ''bulk electric system'' definition.

3. NERC's proposed revision to the definition of ''bulk electric system'' removes regional discretion and establishes a 100 kV bright-line threshold. Further, we believe that NERC's proposal offers additional clarity to the definition of bulk electric system by creating specific inclusions and exclusions within the definition, which provide granularity with regard to common types of facilities and facility configurations and whether they are part of the bulk electric system.

4. We believe that the proposed ''core'' definition, including the inclusions and the exclusions, as well as the exception process should produce consistency in identifying bulk electric system elements across the reliability regions. In addition, it appears that NERC's proposed exception process to add elements to, and remove elements from, the definition of the bulk electric system adds transparency and uniformity to the process.

5. Although it is rare that the Commission would address Rules of Procedure changes in a rulemaking docket, we will do so in this instance because of the interplay between NERC's modified bulk electric system definition and the newly developed case-specific exception process set forth in NERC's proposed Rules of Procedure change. While we propose to approve NERC's petitions, we also seek comment from NERC and interested parties on certain aspects of NERC's petitions to understand the application of the proposed ''core'' definition, including the application of the inclusions and exclusions, and the proposed exception process to ensure consistent implementation.

[1] 16 U.S.C. 824o (2006).

[2] *Revision to Electric Reliability Organization Definition of Bulk Electric System,* Order No. 743, 133 FERC ¶ 61,150, *order on reh'g,* Order No. 743–A, 134 FERC ¶ 61,210 (2011).

I. Background

A. Section 215 of the FPA

6. Section 215 of the FPA requires a Commission-certified ERO to develop mandatory and enforceable Reliability Standards, subject to Commission review and approval. Once approved, the Reliability Standards may be enforced by the ERO, subject to Commission oversight, or by the Commission independently.[3] The Commission established a process to select and certify an ERO[4] and, subsequently, certified NERC as the ERO.[5]

B. Order No. 693

7. On March 16, 2007, in Order No. 693, pursuant to section 215(d) of the FPA, the Commission approved 83 of 107 proposed Reliability Standards, six of the eight proposed regional differences, and the NERC Glossary, which includes NERC's definition of bulk electric system.[6] That definition provides:

> As defined by the Regional Reliability Organization, the electrical generation resources, transmission lines, interconnections with neighboring systems, and associated equipment, generally operated at voltages of 100 kV or higher. Radial transmission facilities serving only load with one transmission source are generally not included in this definition.[7]

8. In approving NERC's definition of bulk electric system, the Commission stated that ''at least for an initial period, the Commission will rely on the NERC definition of bulk electric system and NERC's registration process to provide as much certainty as possible regarding the applicability to and the responsibility of specific entities to comply with the Reliability Standards.''[8] The Commission also stated that ''[it] remains concerned about the need to address the potential for gaps in coverage of facilities.''[9]

C. Order Nos. 743 and 743–A

9. On November 18, 2010, the Commission revisited the definition of ''bulk electric system'' in Order No. 743, which directed NERC, through NERC's Reliability Standards Development Process, to revise its definition of the term ''bulk electric system'' to ensure that the definition encompasses all facilities necessary for operating an interconnected transmission network. The Commission also directed NERC to address the Commission's technical and policy concerns. Among the concerns were inconsistency in application of the definition and a lack of oversight and exclusion of facilities from the bulk electric system that are required for the operation of the interconnected transmission network. In Order No. 743, the Commission stated that the best way to address these concerns is to eliminate the Regional Entity discretion to define bulk electric system without NERC or Commission review, maintain a bright-line threshold that includes all facilities operated at or above 100 kV except defined radial facilities, and adopt an exemption process and criteria for removing from the bulk electric system facilities that are not necessary for operating the interconnected transmission network.[10] However, Order No. 743 did not require NERC to adopt these recommendations as the sole means to address the Commission's concerns. Instead, the Commission allowed NERC to ''propose a different solution that is as effective as, or superior to, the Commission's proposed approach in addressing the Commission's technical and other concerns so as to ensure that all necessary facilities are included within the scope of the definition.''[11] The Commission directed NERC to file the revised definition of bulk electric system and its process to exempt facilities from inclusion in the bulk electric system within one year following the effective date of the final rule.[12]

10. In Order No. 743–A the Commission reaffirmed its determinations in Order No. 743. In addition, the Commission clarified that the issue the Commission directed NERC to rectify was the discretion the Regional Entities have under the current definition to define the bulk electric system in their regions without any oversight from the Commission or NERC.[13] The Commission also clarified that it was not the Commission's intent through its determination regarding ''impact-based methodologies'' to disrupt the NERC Rules of Procedure or the Statement of Compliance Registry Criteria (Registry Criteria).[14] Nor did the Commission intend to rule out using any form of a material impact test that can be shown to identify facilities needed for reliable operation.[15] The Commission also clarified that the 100 kV threshold was a ''first step or proxy'' for determining which facilities should be included in the bulk electric system.[16]

11. The Commission further clarified that the statement in Order No. 743, ''determining where the line between 'transmission' and 'local distribution' lies * * * should be part of the exemption process the ERO develops'' was intended to grant discretion to NERC, as the entity with technical expertise, to develop criteria to determine how to differentiate between local distribution and transmission facilities in an objective, consistent, and transparent manner.[17] The Commission stated that the ''seven factor test'' adopted in Order No. 888 could be relevant and possibly is a logical starting point for determining which facilities are local distribution for reliability purposes.[18] However, the Commission left it to NERC in the first instance to determine if and how the seven factor test should be considered in differentiating between local distribution and transmission facilities for purposes of determining whether a facility should be classified as part of the bulk electric system.[19] Order No. 743–A re-emphasized that local distribution facilities are excluded from the definition of Bulk-Power System and, therefore, must be excluded from the definition of bulk electric system.[20]

D. NERC's Petitions

12. On January 25, 2012, NERC submitted two petitions pursuant to the directives in Order No. 743: (1) NERC's proposed revision to the definition of ''bulk electric system'' which includes provisions to include and exclude

---

[3] *See* 16 U.S.C. 824o(e)(3) (2006).

[4] *Rules Concerning Certification of the Electric Reliability Organization; and Procedures for the Establishment, Approval and Enforcement of Electric Reliability Standards,* Order No. 672, FERC Stats. & Regs. ¶ 31,204, *order on reh'g,* Order No. 672–A, FERC Stats. & Regs. ¶ 31,212 (2006).

[5] *North American Electric Reliability Corp.,* 116 FERC ¶ 61,062, *order on reh'g and compliance,* 117 FERC ¶ 61,126 (2006) (certifying NERC as the ERO responsible for the development and enforcement of mandatory Reliability Standards), *aff'd sub nom. Alcoa Inc.* v. *FERC,* 564 F.3d 1342 (DC Cir. 2009).

[6] *See Mandatory Reliability Standards for the Bulk-Power System,* Order No. 693, FERC Stats. & Regs. ¶ 31,242, *order on reh'g,* Order No. 693–A, 120 FERC ¶ 61,053 (2007).

[7] Order No. 693, FERC Stats. & Regs. ¶ 31,242 at P 75 n. 47 (quoting NERC's definition of ''bulk electric system'').

[8] *Id.* P 75; *see also* Order No. 693–A, 120 FERC ¶ 61,053 at P 19 (''the Commission will continue to rely on NERC's definition of bulk electric system, with the appropriate regional differences, and the registration process until the Commission determines in future proceedings the extent of the Bulk-Power System'').

[9] Order No. 693, FERC Stats. & Regs. ¶ 31,242 at P 77 (footnotes omitted).

[10] Order No. 743, 133 FERC ¶ 61,150 at P 16.

[11] *Id.*

[12] *Id.* P 113.

[13] Order No. 743–A, 134 FERC ¶ 61,210 at P 11.

[14] *Id.* P 47.

[15] *Id.*

[16] *See* Order No. 743–A, 134 FERC ¶ 61,210 at PP 40, 67, 102–103.

[17] *Id.* P 68.

[18] *Id.* P 69.

[19] *Id.* P 70.

[20] *Id.* PP 25, 58.

facilities from the ''core'' definition and (2) revisions to NERC's Rules of Procedure to add a procedure creating an exception process to classify or de-classify a facility as part of the ''bulk electric system.'' In this NOPR, we address both petitions.[21]

1. Revised Definition of Bulk Electric System

13. In Docket No. RM12–06–000, NERC filed a petition requesting Commission approval of a revised definition of ''bulk electric system'' in the NERC Glossary (NERC BES Petition). As explained below, the definition consists of a ''core'' definition and a list of facilities configurations that will be included or excluded from the ''core'' definition. NERC also requests approval of the proposed ''Detailed Information to Support an Exception Request'' form as satisfying the requirement in Order No. 743 that NERC develop ''technical criteria'' to address exception requests.[22] Finally, NERC requests Commission approval of its plan for implementation of the revised definition of ''bulk electric system.''

a. ''Core'' Definition of Bulk Electric System

14. NERC proposes the following ''core'' definition of bulk electric system:

> Unless modified by the [inclusion and exclusion] lists shown below, all Transmission Elements operated at 100 kV or higher and Real Power and Reactive Power resources connected at 100 kV or higher. This does not include facilities used in the local distribution of electric energy.[23]

15. NERC states that the core definition eliminates regional discretion and establishes a clear, bright-line based on a 100 kV threshold. NERC states that the core definition places within the bulk electric system ''all Transmission Elements operated at 100 kV or above, and all Real Power and Reactive Power resources connected at 100 kV or above,'' while establishing an express exclusion for facilities used in the local distribution of electrical energy.[24] NERC states that the revised definition deletes the phrase ''[a]s defined by the Regional Reliability Organization'' that is included in the current definition, eliminating the express basis for regional discretion.[25] NERC explains that the core definition includes the 100 kV criterion as a bright-line threshold, rather than as a general guideline, by eliminating the phrase ''generally operated at'' found in the current definition.[26]

16. NERC also explains that, while the current definition includes the phrase ''associated equipment,'' and the revised definition does not, ''associated equipment'' is included in the revised definition by the use of the term ''Transmission Elements'' included in the revised core definition. NERC states that the NERC Glossary defines ''Transmission'' as ''[a]n interconnected group of lines and associated equipment for the movement or transfer of electric energy between points of supply and points at which it is transformed for delivery to customers or is delivered to other electric systems;''[27] and defines ''Elements'' as, ''[a]ny electrical device with terminals that may be connected to other electrical devices such as a generator, transformer, circuit breaker, bus section, or transmission line. An element may be comprised of one or more components.''[28]

17. NERC states that the revised definition satisfies the Commission's directives and addresses the technical and policy concerns expressed in Order Nos. 743 and 743–A. According to NERC, the explicit basis of authority for Regional Entity discretion in the current definition is eliminated. In addition, NERC states that the core definition establishes specific threshold criteria rather than general guidelines of facilities operated or connected at or above 100 kV. Further, NERC states that the core definition in combination with the specific inclusions and exclusions provides a detailed set of criteria that can be applied on a uniform, consistent basis across all regions, eliminates ambiguity, and eliminates the potential for discretion and subjectivity in determining what facilities are part of or not part of the bulk electric system.

b. Inclusions and Exclusions to the Definition of Bulk Electric System

18. NERC states that, as part of the revised definition, NERC developed inclusions and exclusions to eliminate discretion in application of the revised ''bulk electric system'' definition. NERC states that the inclusions address five specific facilities configurations to provide clarity that the facilities described in these configurations are included in the bulk electric system (unless the facilities are excluded based on one of the specific exclusions).[29] The five inclusions are:

> Inclusions:
> I1—Transformers with the primary terminal and at least one secondary terminal operated at 100 kV or higher unless excluded under Exclusion E1 or E3.
> I2—Generating resource(s) with gross individual nameplate rating greater than 20 MVA or gross plant/facility aggregate nameplate rating greater than 75 MVA including the generator terminals through the high-side of the step-up transformer(s) connected at a voltage of 100 kV or above.
> I3—Blackstart Resources identified in the Transmission Operator's restoration plan.
> I4—Dispersed power producing resources with aggregate capacity greater than 75 MVA (gross aggregate nameplate rating) utilizing a system designed primarily for aggregating capacity, connected at a common point at a voltage of 100 kV or above.
> I5—Static or dynamic devices (excluding generators) dedicated to supplying or absorbing Reactive Power that are connected at 100 kV or higher, or through a dedicated transformer with a high-side voltage of 100 kV or higher, or through a transformer that is designated in Inclusion I1.

19. NERC explains that the facilities described in inclusions I1, I2, I4, and I5 are each operated or connected at or above 100 kV. NERC states that inclusion I3 encompasses blackstart resources identified in a transmission operator's restoration plan, which are necessary for the operation of the interconnection transmission system and should be included in the bulk electric system regardless of their size (MVA) or the voltage at which they are connected. NERC states that the inclusions will further reduce the potential for the exercise of discretion and subjectivity to exclude such configurations from the bulk electric system.

20. According to NERC, inclusion I1 includes transformers with the primary terminal and at least one secondary terminal operated at 100 kV or higher unless excluded under exclusion E1 or E3 (discussed later). NERC states that

[21] ''Exclusion'' refers to configurations of elements NERC has identified within the revised definition of bulk electric system that should not be included in the bulk electric system. In contrast, an ''exception'' refers to an element that falls within the bulk electric system definition but is found not to be necessary for the operation of the grid through the proposed exception process, or an element that an element that falls outside of the bulk electric system definition but is found through the exception process should be part of the bulk electric system. Thus, an ''exception'' may result in adding elements to, or removing elements from, the definition of bulk electric system. Also, NERC uses the term ''exception'' rather than the term ''exemption'' used in Order No. 743. *See* Order No. 743, 133 FERC ¶ 61,150 at P 115.

[22] The Detailed Information to Support an Exception Request is part of the exception process even though NERC filed it as part of the BES Petition. *See* NERC BES Petition at 25–26. Thus, the Commission will address the Detailed Information in the context of the NERC BES Petition rather than in the section of this NOPR addressing the exception procedure petition.

[23] *Id.* at 13.

[24] *Id.* at 16. The current definition and Order No. 743 use the term ''facility.'' NERC proposes to use the term ''Element'' as used in the NERC Glossary.

[25] *Id.* at 15.

[26] *Id.* at 16.

[27] *Id.* at 15 n. 13.

[28] *Id.*

[29] *Id.* at 16.

transformers operating at 100 kV or higher are part of the existing definition, but since transformers have windings operating at different voltages, and multiple windings in some circumstances, clarification was required to explicitly identify which transformers are included in the bulk electric system.

21. Inclusion I2 addresses generating resources with a gross individual nameplate rating greater than 20 MVA or a gross plant/facility aggregate nameplate rating greater than 75 MVA. According to NERC, inclusion I2 includes in the bulk electric system the generator terminals through the high-side of the step-up transformers connected at a voltage of 100 kV or above. NERC states that this inclusion mirrors the text of the NERC Registry Criteria (Appendix 5B of the NERC Rules of Procedure) for generating units.[30] NERC states that a ''basic tenet that was followed in developing the [revised definition] was to avoid changes to Registrations * * * if such changes are not technically required for the [revised definition] to be complete.'' [31]

22. As noted above, inclusion I3 includes blackstart resources identified in the transmission operator's restoration plan in the bulk electric system.

23. Inclusion I4 includes dispersed power producing resources with gross aggregate capacity nameplate rating greater than 75 MVA which utilize a system designed primarily for aggregating capacity, connected at a common point at a voltage of 100 kV or above. NERC states that this inclusion was added to accommodate the effects of variable generation on the bulk electric system.

24. Inclusion I5 addresses static or dynamic devices (excluding generators) dedicated to supplying or absorbing reactive power that are connected at 100 kV or higher, or through a dedicated transformer with a high-side voltage of 100 kV or higher, or through a transformer that is designated in inclusion I1. NERC states that this inclusion is the technical equivalent of inclusion I2 for reactive power devices.

25. NERC states that the four exclusions identify facilities configurations that should not be included in the bulk electric system.[32] Generally, the exclusions address radial systems, behind-the-meter generation and local networks that distribute power to load. The four exclusions are:

Exclusions:

E1—Radial systems: A group of contiguous transmission Elements that emanates from a single point of connection of 100 kV or higher and:

(a) Only serves Load. Or,

(b) Only includes generation resources, not identified in Inclusion I3, with an aggregate capacity less than or equal to 75 MVA (gross nameplate rating). Or,

(c) Where the radial system serves Load and includes generation resources, not identified in Inclusion I3, with an aggregate capacity of non-retail generation less than or equal to 75 MVA (gross nameplate rating).

Note—A normally open switching device between radial systems, as depicted on prints or one-line diagrams for example, does not affect this exclusion.

E2—A generating unit or multiple generating units on the customer's side of the retail meter that serve all or part of the retail Load with electric energy if: (i) The net capacity provided to the BES does not exceed 75 MVA, and (ii) standby, back-up, and maintenance power services are provided to the generating unit or multiple generating units or to the retail Load by a Balancing Authority, or provided pursuant to a binding obligation with a Generator Owner or Generator Operator, or under terms approved by the applicable regulatory authority.

E3—Local networks (LN): A group of contiguous transmission Elements operated at or above 100 kV but less than 300 kV that distribute power to Load rather than transfer bulk-power across the interconnected system. LN's emanate from multiple points of connection at 100 kV or higher to improve the level of service to retail customer Load and not to accommodate bulk-power transfer across the interconnected system. The LN is characterized by all of the following:

(a) *Limits on connected generation:* The LN and its underlying Elements do not include generation resources identified in Inclusion I3 and do not have an aggregate capacity of non-retail generation greater than 75 MVA (gross nameplate rating);

(b) Power flows only into the LN and the LN does not transfer energy originating outside the LN for delivery through the LN; and

(c) *Not part of a Flowgate or transfer path:* The LN does not contain a monitored Facility of a permanent Flowgate in the Eastern Interconnection, a major transfer path within the Western Interconnection, or a comparable monitored Facility in the ERCOT or Quebec Interconnections, and is not a monitored Facility included in an Interconnection Reliability Operating Limit (IROL).

E4—Reactive Power devices owned and operated by the retail customer solely for its own use.

Note—Elements may be included or excluded on a case-by-case basis through the Rules of Procedure exception process.

26. Exclusion E1 provides detailed criteria for determining which facilities are properly excluded from the bulk electric system as radial facilities, which NERC states is intended to enhance the clarity of the radial facilities exclusion. NERC explains that criteria ''b'' and ''c'' of exclusion E1 identify the maximum amount of generation allowed on the radial facility while still qualifying for the radial facilities exclusion (aggregate capacity less than or equal to 75 MVA). NERC indicates that this exclusion addresses the circumstances of small utilities (including municipal utilities and cooperatives). According to NERC, ''the maximum amount of generation allowed on the radial facility is sufficient to allow small utilities to continue to provide service options that support reliability of the interconnected transmission network, while not operating to exclude larger generators from the [bulk electric system].''[33] Further, NERC states, that the maximum amount of generation allowed on the radial facility per criteria ''b'' and ''c'' is consistent with the aggregate capacity threshold presently provided in the Registry Criteria for registration as a generator owner or generator operator (75 MVA gross nameplate rating).

27. With respect to the ''normally open switch'' note at the end of exclusion E1, NERC explains that this note is intended to address a common network configuration ''in which two separate sets of facilities that, each standing alone, would be recognized as radial systems and not included in the bulk electric system are connected by a 'normally open switch'—i.e., a switch that is set to the open position—for reliability purposes.'' [34] NERC states that a switch in this configuration is installed by entities to provide greater reliability to their end-use customers. According to NERC, scheduled maintenance activities on a radial line, or an unscheduled outage impacting the single point of supply to the radial line, could cause the disruption of power supply to the end-use customers served by the line, unless the entity has the ability to temporarily switch to another feed.[35] NERC states that the entity's operating procedures dictate how and when to operate such a normally open switch. NERC explains that an entity does not arbitrarily close the normally open switch placed in this configuration. Rather, the entity closes the ''normally open'' switch to maintain reliability of service to its end-use customers served from the affected radial line. NERC believes that facilities that otherwise meet the criteria for the

[30] *Id.* at 17 (citing section III.c.1 and III.c.2 of Appendix 5B of the Rules of Procedure).

[31] *Id.* at 17.

[32] *Id.* at 18.

[33] *Id.* at 19.

[34] *Id.*

[35] As explained below, the switch, though normally open, could be closed in such circumstances to allow the affected radial line to serve load by relying on another line through the closed switch.

radial system exclusion in exclusion E1 should not be included in the bulk electric system solely because the entity maintains a switch of this type, which is normally open, between sets of radial facilities. NERC states that for a set of radial facilities that are connected by a switch to qualify for the radial exclusion under exclusion E1, the switch must be identified as ''normally open'' on ''source documents such as, prints or one-line diagrams and must in fact be normally set in the open position.'' [36]

28. NERC states that subjecting two sets of radial facilities that are normally unconnected to each other because the switch between them is open to the Reliability Standards during the limited time periods when the switch is closed for maintenance-related or outage-related circumstances would be fundamentally impractical and unworkable (from both the entity's perspective and the ERO's perspective).[37] NERC explains that this note will prevent numerous exception requests because this configuration is common.

29. According to NERC, exclusion E2 excludes a generating unit or units on the customer's side of the retail meter that serves all or part of the retail load subject to two conditions. First, the net capacity provided by the generating unit does not exceed 75 MVA. Second, standby, back-up, and maintenance power services are provided to the generating unit or the retail load by a balancing authority, or pursuant to a binding obligation with a generator owner or generator operator, or under terms approved by the applicable regulatory authority. NERC states that these generating units are not necessary for the operation of the interconnected transmission network and, therefore, do not need to be included in the definition because they serve a single retail load, provide a limited amount of capacity to the bulk electric system, and are fully backed up by other resources.[38]

30. NERC explains that exclusion E3, the ''local network'' exclusion, encompasses local networks of transmission elements operated at between 100 kV and 300 kV ''that distribute power to load rather than transfer bulk power across the interconnected system.'' [39] NERC explains that ''[t]he purpose of local networks is to provide local distribution service, not to provide transfer capacity for the interconnected transmission network.'' [40] According to NERC, a network that supports distribution and does not accommodate bulk-power transfers across the interconnected system should not be included in the bulk electric system. NERC also states that the ''detailed conditions established in exclusion E3 are sufficient to ensure that such qualifying local networks are being used exclusively for local distribution purposes.'' [41] NERC adds that facilities used for the local distribution of electric energy are expressly excluded from the bulk electric system by the core definition as well as by the local network exclusion.

31. Exclusion E4 encompasses reactive power devices owned and operated by a retail customer solely for its own use. NERC explains that exclusion E4 is the technical equivalent of exclusion E2 for reactive power devices.

c. Detailed Information To Support an Exception Request

32. In Order No. 743, the Commission directed NERC to develop a set of technical criteria to use in addressing requests for exceptions to the definition of the bulk electric system.[42] NERC states that it would be ''more feasible to develop a common set of data and information that could be used by the Regional Entities and NERC to evaluate exception requests'' than to develop the detailed criteria.[43] The Detailed Information Form contains the common set of data that entities seeking an exception must submit with every exception request. NERC indicates that the Detailed Information Form represents an equal and effective alternative approach to developing a substantive set of technical criteria for granting and rejecting exception requests required in Order No. 743.[44] Thus, NERC asks the Commission to approve the Detailed Information Form as satisfying the Commission's technical concerns expressed in Order No. 743 with respect to the need for criteria to approve or disapprove exception requests.

33. The Detailed Information Form specifies that all exception requests include a one-line breaker diagram identifying the element for which the exception is requested and data and studies to support the submittal. NERC states that the studies should be based on an Interconnection-wide base case to reflect the electrical characteristics and system topology. The studies should clearly document all assumptions used, address key performance measures of bulk electric system reliability through steady state power flow, and contain a transient stability analysis as necessary to support the entity's request. NERC notes that the applicant remains responsible for providing sufficient information and argument to justify the exception request.[45]

34. According to NERC, the information that an applicant may submit in support of an exception request is not limited to the Detailed Information Form. Rather, an applicant is expected to submit all relevant data, studies and other information that supports the exception request. Further, the Regional Entity and NERC may ask an applicant to provide other data and studies in addition to the Detailed Information Form.[46]

d. Proposed Implementation Plan for Revised Definition of ''Bulk Electric System''

35. NERC requests that the revised definition ''should be effective on the first day of the second calendar quarter after receiving applicable regulatory approval, or, in those jurisdictions where no regulatory approval is required, the revised [bulk electric system definition] should go into effect on the first day of the second calendar quarter after its adoption by the NERC Board.[47] The existing definition would be retired at midnight of the day immediately prior to the effective date of the revised definition in the jurisdiction in which the revised definition is becoming effective. NERC states that the proposed effective date is appropriate to provide a reasonable time between the date of regulatory approval, which is not under the control of NERC or the industry, and the effective date of the revised BES definition.[48]

36. NERC also requests that compliance obligations for all elements newly-identified to be included in the bulk electric system based on the revised definition should begin twenty-four months after the applicable effective date of the revised definition. NERC notes that the Commission stated

[36] *Id.* at 20 n. 26. NERC provides other examples of source documents such as diagrams displayed within an energy management system or a SCADA system.

[37] *Id.* at 20–21.

[38] *Id.* at 21.

[39] *Id.* at 22.

[40] *Id.*

[41] *Id.* at 23. *See also id.* at Exh. G (Technical Justification Paper for ''Local Network Exclusion'') at 2 (LN Technical Paper).

[42] Order No. 743, 133 FERC ¶ 61,150 at P 115 (stating ''NERC should develop an exemption process that includes clear, objective, transparent and uniformly applicable criteria for the exemption of facilities that are not necessary for operating the grid.'').

[43] NERC BES Petition at 26.

[44] *Id.* at 26, 32 (citing Order No. 743, 133 FERC ¶ 61,150 at P 115).

[45] *Id.* at 30.

[46] *Id.* at 27 n.32.

[47] *Id.* at 34.

[48] *Id.*

in Order Nos. 743 and 743–A that the transition period should not exceed 18 months from the date of Commission approval of the revised definition, unless the Commission approved a longer transition period based on specific justification. NERC believes that a ''somewhat longer transition period'' is necessary in light of the actions that will need to be completed in connection with the revised definition. NERC notes that in the United States, the proposed transition period will be between a minimum of approximately twenty-seven months and a maximum of thirty months from the date of Commission approval, depending on the date of Commission approval.'' [49] NERC states that sufficient time is needed: (1) To implement transition plans to accommodate any changes resulting from the revised definition; (2) for entities to file for exceptions, and for the Regional Entities and NERC to process those exceptions to a final determination, pursuant to the proposed exception process; and (3) for owners of facilities and elements that are newly-included in the bulk electric system based on the definition to train their personnel on compliance with the Reliability Standards applicable to the newly-included facilities and elements, so that these entities can achieve compliance with applicable Reliability Standards by the end of the transition period.

2. NERC Petition for Approval of Revisions to Rules of Procedure To Adopt a Bulk Electric System Exception Process

a. Changes to NERC's Rules of Procedure

37. In Docket No. RM12–7–000, NERC filed proposed revisions to its Rules of Procedure for the purpose of adopting a procedure for entities to obtain an exception from the definition of bulk electric system (NERC ROP Petition). NERC states that the proposed exception process, which is a mechanism to add elements to, and remove elements from, the bulk electric system, addresses the concerns raised in Order No. 743 with respect to the current processes for determining what facilities are part of the bulk electric system and what facilities are not.[50] NERC also states that the exception process ''provides for decisions to approve or disapprove exception requests to be made by NERC, rather than by the Regional Entities, thereby eliminating the potential for inconsistency and subjectivity that the Commission was concerned [about, which] was created by having decisions as to what facilities are included in or excluded from the BES made at the Regional Entity level.'' [51] NERC proposes to add section 509 (Exceptions to the Definition of the Bulk Electric System), section 1703 (Challenges to NERC Determinations of BES Exception Requests) and Appendix 5C (Procedure for Requesting and Receiving an Exception to the NERC Definition of Bulk Electric System) to NERC's Rules of Procedure. The NERC ROP Petition also includes proposed conforming revisions to other Rules of Procedure, including revisions to sections 302.2, 501.1.4.4, 804, 1102.2, and 1701 and appendices 2, 3D, 4B, 5B, 6, and 8, which NERC states are necessary in light of the revised definition and the exception process.

Section 509 of the Rules of Procedure

38. NERC states that proposed section 509 establishes a procedure, which is contained in a new Appendix 5C to the Rules of Procedure, for an entity to request that an element that falls outside of the definition of the bulk electric system be treated as part of the bulk electric system and for an entity to request that an element that falls within the definition of the bulk electric system not be treated as part of the bulk electric system:

> An Element is considered to be (or not be) part of the Bulk Electric System by applying the BES Definition to the Element (including the inclusions and exclusions set forth therein). Appendix 5C sets forth the procedures by which (i) an entity may request a determination that an Element that falls within the definition of Bulk Electric System should be exempted from being considered a part of the Bulk Electric System, or (ii) an entity may request that an Element that falls outside the definition of the Bulk Electric System should be considered a part of the Bulk Electric System.[52]

NERC explains that the exception process is ''not intended to be used to resolve ambiguous situations,'' i.e. the exception process is only available after an initial determination has been made regarding whether an element is part of or not part of the bulk electric system through the application of the definition to the element.[53]

Appendix 5C to the Rules of Procedure

39. NERC explains that proposed Appendix 5C sets forth the detailed procedures for obtaining an exception to include an element in, or remove an element from, the bulk electric system.[54] The exception process involves three steps.[55] First, an entity applies the bulk electric system definition to a transmission element to determine its status. If the entity believes that the element, contrary to its characterization based on the definition, should either be treated, or not be treated, as part of the bulk electric system, the entity may submit an exception request to the Regional Entity in which the element is located. Second, the Regional Entity screens the request to determine whether the application meets the filing criteria and, if so, reviews the application and makes a recommendation to NERC whether to approve or deny the request. Third, the NERC President decides whether to approve or deny the exception request after considering the opinion provided by a NERC review panel.[56] If the entity does not agree with the NERC President's decision, it may appeal the decision to the NERC Board of Trustees Compliance Committee (Compliance Committee) who is the final arbiter of the request.

40. According to NERC, if the Regional Entity denies the exception request based on the initial screening but the applicant believes the exception request is proper and complete, the applicant may appeal the rejection directly to NERC.

41. NERC explains that the proposed exception process will allow NERC to provide consistent determinations on exception requests submitted from different regions involving the same or similar facts and circumstances, and will allow NERC to take into account the aggregate impact on the bulk electric system of approving or disapproving all of the exception requests. Finally, the exception process includes provisions for reporting information that may alter the status of an approved exception, verifying whether an exception continues to be warranted, and revoking an exception that is no longer warranted.

42. The proposed exception process includes provisions for obtaining exceptions both for inclusion in and exclusion from the bulk electric system. NERC identifies the entities that are eligible to submit exception requests. Specifically, the owner of an element may submit a request to include the element in, or remove it from, the bulk

[49] *Id.* at 35.

[50] NERC ROP Petition at 4.

[51] *Id.* (footnote omitted).

[52] *Id.* at 10.

[53] *Id.* at 10–11.

[54] *Id.* at 11. *See* also section D.1.c above.

[55] *Id.* at 13–14.

[56] The panel will have at least three members. NERC ROP Petition at 14.

electric system.[57] A Regional Entity, planning authority, reliability coordinator, transmission operator, transmission planner, or balancing authority that has (or will have upon inclusion in the bulk electric system) the elements covered by an exception request within its scope of responsibility may submit an exception request for the inclusion in the bulk electric system of an element or elements owned by a registered entity. NERC states that only a Regional Entity may submit an exception request for the inclusion in the bulk electric system of an element owned by an owner that is not a registered entity.

43. Finally, NERC states that an exception request will be subject to review to verify continuing justification for the exception.[58] According to NERC, the proposed exception process requires an entity to notify the Regional Entity and NERC within 90 days after learning of any change of condition which would affect the basis for approving the exception request. NERC will then review the information and determine whether to direct the Regional Entity to perform a substantive review to verify continuing justification and issue a recommendation to NERC.[59] NERC also states that an entity must certify every 36 months to the appropriate Regional Entity that the basis for the exception request remains valid. In addition, the proposed exception process states that if the Regional Entity obtains information through means other than the submitting entity that indicates an exception may no longer be warranted, the Regional Entity must provide NERC with the information. NERC will review the information and determine whether to direct the Regional Entity to perform a substantive review to verify continuing justification and issue a recommendation to NERC.[60]

44. NERC states that the exception process establishes a process that (1) Balances the need for effective and efficient administration with due process and clarity of expectations; (2) promotes consistency in determinations and eliminates Regional discretion by having all decisions on Exception Requests made at NERC; (3) provides for involvement of persons with applicable technical expertise in making decisions on ception Requests; and (4) should alleviate concerns about a ''one-size-fits-all'' approach.[61]

Section 1703 of the Rules of Procedure

45. NERC has also proposed to modify its Rules of Procedure to add a procedure for an entity to challenge the NERC decision on an exception request. The entity must file the challenge with the Compliance Committee within 30 days of the date of the NERC decision. The Compliance Committee must issue its decision within 90 days after the submission of the challenge, which the Compliance Committee may extend. NERC states that the Compliance Committee decision will be the final NERC decision on the exception request. In addition, the entity may appeal the final NERC decision to the Commission within 30 days following the date of the Compliance Committee's decision, or within such time period as the Commission's legal authority permits.

b. NERC's List of Facilities Granted Exceptions

46. In Order No. 743, the Commission stated that NERC should maintain a list of exempted facilities that can be made available to the Commission upon request.[62] NERC states that the proposed exception process does not include provisions for NERC to maintain a list of facilities that have received exceptions, as requested in Order No. 743, as this is an internal administrative matter for NERC to implement that does not need to be embedded in the Rules of Procedure.[63] NERC states it will develop a specific internal plan and procedures for maintaining a list of facilities for which exceptions have been granted.

47. NERC also notes that Regional Entities will maintain lists of elements within their regions for which exceptions have been granted, in order to monitor compliance with the requirement to submit periodic certifications pursuant to section 11.3 of Appendix 5C.[64]

II. Discussion

48. Pursuant to section 215(d) of the FPA we propose to approve NERC's revised definition of bulk electric system, including the specific inclusions and exclusions set forth in the definition, as just, reasonable, not unduly discriminatory or preferential, and in the public interest. As discussed below, we believe that NERC's proposal satisfies the directives of Order No. 743 to develop modifications to the currently-effective definition of bulk electric system to ensure that the definition encompasses all facilities necessary for operating an interconnected transmission network and remove the Regional Entity discretion that currently allows for regional variations without review or oversight. We also believe NERC's proposed definition satisfies the Commission's technical concerns in Order No. 743 through the use of a bright-line 100 kV threshold, with specific inclusions and exclusions within the definition, for identifying bulk electric system elements and the establishment of an exception process for facilities that are not necessary for operating the interconnected transmission network. Further, we believe NERC's proposed definition improves clarity and transparency. Below, we discuss the proposed ''core'' bulk electric system definition as well as each bright-line inclusion and exclusion of the proposed definition.

49. While proposing to approve NERC's modified definition, we also seek additional explanation and comments regarding potential applications of the ''core'' definition, as well as the inclusions and exclusions. We believe that a common understanding of the proposed bulk electric system definition (1) promotes consistent application of the definition in identifying bulk electric system elements and facilities and (2) provides up-front clarity so as to minimize the need for future clarifications either formally through NERC's standards clarification process or case-specific in a compliance setting. Thus, we seek comment from NERC and other interested persons regarding the scenarios and applications of the NERC proposal, discussed below. Although we propose to approve the definition in this rulemaking, the responses to our questions are also intended to guide the Commission as to whether other action may be necessary, for example, directing NERC to develop a further modification to the core definition, inclusions or exclusions pursuant to section 215(d)(5) of the FPA.

50. Further, pursuant to section 215(f) of the FPA, we propose to approve the revisions to the NERC Rules of Procedure that establish an exception process to determine case-specific exceptions to the bulk electric system definition. NERC's proposal meets the section 215(f) standard of review for changes to the Rules of Procedure. The

[57] Section 5C of NERC's Rules of Procedure defines ''owner'' as ''the owner(s) of an [e]lement or [e]lements that is or may be determined to be part of the [bulk electric system] as a result of either the application of the [bulk electric system] [d]efinition or an [e]xception, or another entity, such as an operator, authorized to act on behalf of the owner of the [e]lement or [e]lements in the context of an [e]xception [r]equest.''

[58] *Id.* at 34 and Att. 1 at 17.

[59] *Id.* at 34–35 and Att. 1 at 17.

[60] *Id.* at 35 and Att. 1 at 17.

[61] *Id.* at 17.

[62] Order No. 743, 133 FERC ¶ 61,150 at P 117.

[63] NERC ROP Petition at 49.

[64] *Id.*

Detailed Information Form in the proposed rules identifies ''base-line'' information and data that any applicant must submit. Further, after Regional Entity input, NERC makes the final decision on whether to grant an exception request, which better assures consistency of decisions across all regions.

51. In Order No. 743, the Commission stated that NERC should maintain a list of facilities included or excluded from the bulk electric system pursuant to the exception process.[65] NERC indicates that, while it plans to maintain such a list, maintaining the list is an internal NERC function and, thus, not included in NERC's proposed Rules of Procedure. To understand how NERC intends to comply with the directive from Order No. 743, we propose to require that NERC submit a compliance filing detailing its internal process for tracking exception requests.

52. Below, the Commission discusses (A) the ''core'' bulk electric system definition; (B) proposed inclusions and exclusions in the definition; (C) the case-specific exception process; (D) the Detailed Information Form; and (E) NERC's implementation plan.

A. The Commission Proposes To Approve the Core Definition of Bulk Electric System

53. The bulk electric system ''core'' definition developed by NERC states as follows:

> Unless modified by the lists shown below, all Transmission Elements operated at 100 kV or higher and Real Power and Reactive Power resources connected at 100 kV or higher. This does not include facilities used in the local distribution of electric energy.

54. In Order No. 743, the Commission found that ''the current definition of bulk electric system is insufficient to ensure that all facilities necessary for operating an interconnected electric energy transmission network are included under the 'bulk electric system' rubric.'' [66] The Commission also stated that the ''aim'' of the final rule was to ''eliminate inconsistencies across regions, eliminate the ambiguity created by the current discretion in NERC's definition of bulk electric system, provide a backstop review to ensure that any variations do not compromise reliability, and ensure that facilities that could significantly affect reliability are subject to mandatory rules.'' [67] The Commission stated that the one way to accomplish these goals is to eliminate the regional discretion in the current definition, and maintain the bright-line threshold that includes all facilities operated at or above 100 kV and establish an exception process and criteria for excluding facilities that are not necessary for the operation of the interconnected transmission network.[68]

55. It appears that NERC's proposal satisfies the objectives set forth in Order No. 743. The ''core'' definition, quoted above, establishes the fundamental threshold for inclusion of facilities in the bulk electric system as those that are operated at 100 kV or higher, if they are transmission elements, or are connected at 100 kV or higher, if they are real power or reactive power resources. The core definition also establishes a 100 kV criterion as a bright-line threshold, rather than as a general guideline as in the current definition, i.e., the phrase ''generally operated at'' in the current definition is eliminated. As NERC explains, the core definition also continues to capture equipment associated with the facilities included in the bulk electric system.[69]

56. Further, consistent with Order No. 743, NERC's proposed ''bulk electric system'' definition eliminates the phrase ''as defined by the Regional Reliability Organization * * *.'' As a result, NERC's proposed definition will apply nation-wide. Thus, we believe NERC's proposal adequately addresses the concerns articulated in Order No. 743 regarding unfettered regional discretion and the need for a consistent approach satisfies the concerns regarding the elimination of inconsistencies across regions. The Commission seeks comment on whether the revised definition adequately eliminates subjectivity and regional variation as required in Order No. 743.[70]

57. Below, we seek comment regarding the exclusion of facilities used in local distribution.

Local Distribution

58. In Order No. 743, the Commission acknowledged that ''Congress has specifically exempted 'facilities used in the local distribution of electric energy' '' from the Bulk-Power System definition and that, because such facilities are exempted from the Bulk-Power System, they also are excluded from the bulk electric system.[71] The Commission also stated that, although local distribution facilities are excluded from the definition, it still is necessary to determine which facilities are local distribution, and which are transmission.[72] As the Commission stated in order No. 743–A, ''[w]hether facilities are used in local distribution will in certain instances raise a question of fact, which the Commission has jurisdiction to determine.'' In Order No. 743, the Commission also recognized that NERC would need to establish whether a particular facility is local distribution or transmission, and directed NERC to develop a means, subject to Commission approval, to make such a determination.[73] In Order No. 743–A the Commission clarified that

> the statement in Order No. 743, ''determining where the line between 'transmission' and 'local distribution' lies * * * should be part of the exemption process the ERO develops'' was intended to grant discretion to the ERO, as the entity with technical expertise, to develop criteria to determine how to differentiate between local distribution and transmission facilities in an objective, consistent, and transparent manner. * * * Once NERC develops and submits its proposal to the Commission, the Commission will, as part of its evaluation of the proposal, determine whether the process developed adequately differentiates between local distribution and transmission.
>
> We agree * * * that the Seven Factor Test could be relevant and possibly is a logical starting point for determining which facilities are local distribution for reliability purposes, while also allowing NERC flexibility in

[65] Order No. 743, 133 FERC ¶ 61,150 at P 117.

[66] Order No. 743, 133 FERC ¶ 61,150 at P 30.

[67] *Id.* P 2.

[68] *Id.*

[69] The core definition includes all ''Transmission Elements operated at or above 100 kV.'' As NERC explains in its petition, the NERC-defined term ''Transmission'' includes the phrase ''associated equipment.'' The NERC Glossary defines ''Transmission'' as ''[a]n interconnected group of lines and associated equipment for the movement or transfer of electric energy between points of supply and points at which it is transformed for delivery to customers or is delivered to other electric systems.'' Additionally, the Glossary defines ''Elements'' as ''[a]ny electrical device with terminals that may be connected to other electrical devices such as a generator, transformer, circuit breaker, bus section, or transmission line. An element may be comprised of one or more components.'' We agree with NERC that while the new definition does not use the term ''associated equipment,'' the phrase is included in the definition through the defined term ''Transmission Elements.''

[70] *Id.* PP 11–12, 57. The Commission notes that nothing in the immediate rulemaking proceeding should impact the application of available transmission capability (ATC) calculations as set for in Order No. 890. *See Preventing Undue Discrimination and Preference in Transmission Service,* Order No. 890, FERC Stats. & Regs. ¶ 31,241, at P 196, *order on reh'g,* Order No. 890–A, FERC Stats. & Regs. ¶ 31,261 (2007), *order on reh'g,* Order No. 890–B, 123 FERC ¶ 61,299 (2008), *order on reh'g,* Order No. 890–C, 126 FERC ¶ 61,228 (2009), *order on clarification,* Order No. 890–D, 129 FERC ¶ 61,126 (2009). Public utility transmission service providers (or their designate) have the obligation to comply in all respects with their Commission approved tariff. This requires that they must continue to use the applicable Reliability Standards to plan and operate both their bulk electric system and non-bulk electric system facilities included in their tariffs.

[71] Order No. 743, 133 FERC ¶ 61,150 at P 37.

[72] Order No. 743–A, 134 FERC ¶ 61,210 at P 67.

[73] Order No. 743, 133 FERC ¶ 61,150 at P 37.

applying the test or developing an alternative approach as it deems necessary.[74]

59. In addressing what constitutes local distribution, NERC explains that the second sentence in the core definition, which excludes ''facilities used in the local distribution of electric energy,'' is consistent with section 215(a)(1)(B) of the FPA and the Commission's regulations at 18 CFR 39.1 and as recognized in Order No. 743–A.'' [75] NERC states that ''the core definition * * * establish[es] an express carve out for facilities used in the local distribution of electrical energy.'' [76] NERC also states that facilities for the local distribution of electric energy are expressly excluded from the bulk electric system by the core definition as well as by the local network exclusion, exclusion E3.[77] NERC adds that, while some stakeholders suggested that the Commission's seven-factor test should be employed to determine distribution facilities, the NERC drafting team ''rejected this approach as the sole determination of distribution facilities, * * * [but] pointed out that such a test could be utilized by a Submitting Entity making an Exception Request but that other information should be supplied to support the request.'' [78]

60. The Commission seeks comment from NERC and the public regarding how the proposed definition is responsive to the Commission's directives in Order Nos. 743 and 743–A. Specifically, the Commission seeks comment on how NERC's proposal adequately differentiates between local distribution and transmission facilities in an objective, consistent, and transparent manner.[79]

B. The Commission Proposes To Approve the List of Inclusions and Exclusions in the Definition of Bulk Electric System

61. Along with the core definition, NERC's proposal provides specific inclusions and exclusions. The inclusions and exclusions provide added clarity regarding which elements are part of the bulk electric system as compared to the existing definition. For example, the inclusion of generating resources, blackstart resources and dispersed power producing resources provide additional information and granularity that assist in the identification of bulk electric system facilities or elements. However, we also have questions about how some of the inclusions and exclusions will be applied by NERC, Regional Entities and users, owners and operators of the Bulk-Power System. Through the responses to these questions we seek to better understand potential applications of the inclusions and exclusions, their effect on identifying the facilities or elements for bulk electric system reliability, and whether possible gaps exist.

1. Inclusions

a. Inclusion I1 (Transformers)

62. Inclusion I1 provides ''[t]ransformers with the primary terminal and at least one secondary terminal operated at 100 kV or higher unless excluded under [the radial system or local network exclusion].'' NERC explains that:

> Transformers operating at 100 kV or higher are part of the existing definition, but since transformers have windings operating at different voltages, and multiple windings in some circumstances, clarification was required to explicitly identify which transformers are included in the BES. Inclusion I1 includes in the BES those transformers operating at 100 kV or higher on the primary winding and at least one secondary winding, so as to be in concert with the core definition.[80]

63. We believe that inclusion I1, with NERC's explanation, is a reasonable approach to identifying transformers that are appropriately included as part of the bulk electric system. However, circumstances may warrant inclusion of a particular transformer—through the proposed case-specific exception process—where a transformer is operated at 100 kV or higher on the primary winding but all secondary terminals are operated below 100 kV. The joint NERC and Commission staff report on the September 8, 2011, Arizona-Southern California blackout discusses how a 92 kV networked system experienced parallel flows from bulk electric system elements through two 230/92 kV transformers.[81] The report explains that the reliability coordinator, transmission operators and balancing authorities did not consider certain sub-100 kV facilities, including two 230/92 kV transformers as bulk electric system elements. Consequently, when contingencies occurred on the bulk electric system on September 8, 2011, the reliability coordinator, transmission operators and balancing authorities were unaware that the contingencies adversely impacted the 230/92 kV transformers or how the loss of the transformers impacted system reliability.[82] The Commission seeks comment on whether these types of transformers, i.e., those that have a terminal operated at 100 kV or above on the high side and below 100 kV on the low side should be designated as part of the bulk electric system. If answered in the affirmative, the Commission seeks further comment whether the case-by-case exception process suffices, or a generic inclusion is appropriate to address the concerns identified in Order No. 743.

b. Inclusion I2 (Generating Resources)

64. Inclusion I2 provides:

> Generating resource(s) with gross individual nameplate rating greater than 20 MVA or gross plant/facility aggregate nameplate rating greater than 75 MVA including the generator terminals through the high-side of the step-up transformer(s) connected at a voltage of 100 kV or above.

According to NERC, this inclusion ''mirrors'' the text of the NERC *Registry Criteria* for generating units. NERC explains that the drafting team ''found no technical rationale for changing at this time from the thresholds for generating resources presently specified in the * * * *Registry Criteria.*'' [83] Further, NERC states that, to provide clarity, the revised definition specifies that the bulk electric system ''includes the generator terminals through the high-side of the step-up transformer connected at a voltage of 100 kV or above.'' [84]

[74] Order No. 743–A, 134 FERC ¶ 61,210 at PP 68–69 (footnotes omitted).

[75] NERC BES Petition at 16.

[76] *Id.* at 22–23.

[77] NERC's LN Technical Paper, Exhibit G of NERC's Petition, provides:

> In Order 743a, the Commission made it clear that facilities that are used in the local distribution of electric energy will be excluded from the Bulk Electric System. * * * In response to this facet of the Order, in developing the BES definition, the SDT has followed this guidance. Exclusion E3 was specifically designed to capture for exclusion those high voltage non-radial facilities being used for the local distribution of energy.
>
> The exclusion characteristics in items a, b, and c * * * serve to ensure that facilities excluded under the local network exclusion (E3) are not necessary for the reliable operation of the interconnected electric transmission network and are instead used in the local distribution of energy.

Id., Ex. G, at 2.

[78] NERC BES Petition at 49.

[79] We note that an element that falls outside of the definition of bulk electric system is not necessarily local distribution.

[80] NERC BES Petition at 17.

[81] Arizona-Southern California Outages on September 8, 2011—Causes and Recommendations at 96 (September 2011 Blackout Report), *available at http://www.ferc.gov/legal/staff-reports/04-27-2012-ferc-nerc-report.pdf.*

[82] *Id.* at 96–97.

[83] NERC BES Petition at 17. NERC states ''A basic tenet that was followed in developing the revised BES Definition was to avoid changes to Registrations due to the revised BES Definition if such changes are not technically required for the BES Definition to be complete.'' *Id.* (citing Order No. 743–A, 134 FERC ¶ 61,210 at P 102).

[84] NERC BES Petition at 17.

65. We believe that Inclusion I2 provides useful granularity regarding the inclusion of generation resources as part of the bulk electric system. However, we seek comment regarding several aspects of inclusion I2. NERC's Registry Criteria thresholds for generators provides for the registration of ''[i]ndividual generating unit > 20 MVA (gross nameplate rating) and is directly connected to the Bulk Power System'' or ''[g]enerating plant/facility > 75 MVA (gross aggregate nameplate rating) or when the entity has responsibility for any facility consisting of one or more units that are connected to the Bulk Power System at a common bus with total generation above 75 MVA gross nameplate rating.'' [85] We agree that proposed inclusion I2 is consistent with the individual and aggregate nameplate rating thresholds set forth in the Registry Criteria. We note, however, that the Registry Criteria and the proposed definition differ regarding the description of the connection point of the generating units and plants. While inclusion I2 specifies ''generator terminals through the high-side of the step-up transformer(s) connected at a voltage of 100 kV or above,'' the Registry Criteria specifies a ''direct connection'' to the Bulk-Power System. We seek comment whether inclusion I2 will result in a material change to registration of existing generating units due to the difference in the language regarding the connection point. In addition, we seek comment if, pursuant to inclusion I2, the following circumstances are included in the bulk electric system: A generating unit, with a gross individual nameplate rating greater than 20 MVA connected through the high-side of the step-up transformer connected at a voltage of 100 kV or above *when the low side of the transformer is less than 100 kV.* How does this result differ for a generation resource with two or more step-up transformers where the last transformer in the series operates at 100 kV or above, for example, a 50 MVA generator first steps up through a 23 kV transformer on the low side and 69 kV on the high side and then immediately steps up through a second transformer at the same site with less than 100 kV on the low side and above 100 kV on the high side?

c. Inclusion I3 (Blackstart Resources Identified in the Transmission Operator's Restoration Plan)

66. Inclusion I3 identifies as part of the bulk electric system ''Blackstart Resources identified in a Transmission Operator's restoration plan.'' NERC explains that blackstart resources are ''vital'' for the reliable operation of the bulk electric system and are included ''regardless of their size (MVA) or the voltage at which they are connected.'' [86] NERC further states that including blackstart resources is consistent with the *Registry Criteria,* which provide that ''*any generator, regardless* of size, that is a blackstart unit material to and designated as part of a transmission operator entity's restoration plan'' is eligible for registration.[87]

67. We agree with NERC that inclusion of blackstart resources in the definition is vital to reliability and is an improvement to the definition. We seek clarification whether the term ''restoration plan'' refers to the system restoration plans required in the Emergency Preparedness and Operations (EOP) Reliability Standards or included in a Commission approved tariff.[88]

68. NERC states that first posting of the revised definition included ''cranking paths'' for blackstart resources due to a concern about ''the possibility of having Blackstart Resources without a 'guaranteed' path'' to the [bulk electric system].'' [89] NERC explains that ''a number of commenters complained that this was improperly bringing distribution level Elements into the [bulk electric system], as many Cranking Paths are at the distribution level'' and ''also pointed out that this was an illusory proposition as intended Cranking Paths are not always the ones used in actual restoration.'' [90] As a result of the industry feedback, NERC deleted cranking paths from the revised definition with the understanding that the issue would be revisited in Phase 2 of the BES project. According to NERC, ''this approach would maintain status quo on this topic, consistent with Order Nos. 743 and 743–A, while providing for a full discussion and consideration of the issue in a less time constrained environment''.[91] [92] Subsequently, however, the topic of cranking paths was deleted from the scope of the Phase 2 BES project.[93] In light of the decision not to further pursue a possible revision to the bulk electric system definition pertaining to cranking paths, the Commission is concerned whether a reliability gap exists with regard to cranking paths. Cranking paths constitute a basic element of system restoration, and it is unclear whether reliability can be adequately maintained when blackstart generators are defined as part of the bulk electric system but not the transmission paths that are used to deliver the energy from blackstart generators to the integrated transmission system. We also recognize that cranking paths may implicate facilities used in local distribution. Accordingly, we seek comment on whether a reliability gap may exist with regard to cranking paths and, if so, what potential approaches are appropriate to remove the gap. We also seek comment on the appropriate role, if any, of state regulators in ensuring that energy from blackstart generation is reliably delivered through cranking paths to restart the system after an event.

d. Inclusion I4 (Dispersed Power Producing Resources)

69. Inclusion I4 identifies as part of the bulk electric system:

Dispersed power producing resources with aggregate capacity greater than 75 MVA (gross aggregate nameplate rating) utilizing a system designed primarily for aggregating capacity, connected at a common point at a voltage of 100 kV or above.

70. NERC explains that this inclusion is intended ''to accommodate the effects of variable generation'' on the bulk

[85] Registry Criteria, III.c.1 and c.2 (Generator Owner/Operator).

[86] NERC BES Petition at 18.

[87] *Id.* (emphasis added).

[88] Reliability Standard EOP–005–1, System Restoration Plans, requires a transmission operator to create ''a restoration plan to reestablish its electric system in a stable and orderly manner in the event of a partial or total shutdown of its system.''

[89] NERC BES Petition at 47. The NERC Glossary defines ''Cranking Path'' as ''[a] portion of the electric system that can be isolated and then energized to deliver electric power from a generation source to enable the startup of one or more other generating units.'' *See also* the Regional Bulk Electric System Definition Coordination Group concept paper that recommends including the designated cranking paths for the blackstart resources available at *http://www.nerc.com/docs/standards/sar/Project_2010-17_Concept_Paper.pdf.*

[90] *Id.*

[91] *Id.* NERC's Project 2010–17, the ''Phase 2 BES Project.''

[92] *Id.* NERC's Project 2010–17, the ''Phase 2 BES Project.''

[93] The February 21–23, 2012 meeting notes from the Project 2010–17 Definition of Bulk Electric System Phase 2 Standard Drafting Team states that ''the SDT decided to delete the Cranking Path reference in the [Phase 2] SAR.'' The reasons for the deletion included ''that Cranking Paths reach down into distribution and thus shouldn't be included in the definition,'' and ''that this issue was debated in Phase 1 and resolution was obtained,'' and ''that Cranking Paths were only needed when an entity was in restoration mode so it wasn't needed in the definition.'' However, the same document states some commenters believe ''that Cranking Paths were only needed when an entity was in restoration * * * and * * * that this was a reason to have it in the definition.'' *See* Meeting Notes from the Project 2010–17 Definition of Bulk Electric System Phase 2 Standard Drafting Team, February 21–23, 2012, at Page 5, *available at http://www.nerc.com/docs/standards/dt/Meeting_Notes-Project_2010-17_DBES-February_21-23,_2012.pdf.*

electric system.[94] NERC further states that even though inclusion I4 could be considered subsumed in inclusion I2 (generating resources), NERC believes it is appropriate ''to expressly cover dispersed power producing resources utilizing a system designed primarily for aggregating capacity.'' [95]

71. We believe that inclusion I4 provides useful granularity in the bulk electric system definition. To better understand the application of inclusion I4, we seek comment whether this provision includes as part of the bulk electric system the individual elements (from each energy-producing resource at the site through the collector system to the common point at a voltage of 100 kV or above) used to aggregate the capacity and any step-up transformers used to connect the system to a common point at a voltage of 100 kV or above.

e. Inclusion I5 (Static or Dynamic Reactive Power Devices)

72. Inclusion I5 identifies as part of the bulk electric system:

> Static or dynamic devices (excluding generators) dedicated to supplying or absorbing Reactive Power that are connected at 100 kV or higher, or through a dedicated transformer with a high-side voltage of 100 kV or higher, or through a transformer that is designated in Inclusion I1.

NERC explains that this inclusion is the technical equivalent of inclusion I2 (generating resources), for reactive power devices and points out that the existing definition is unclear as to how these devices are treated.[96] NERC states inclusion I5 provides clarity by ''providing specific criteria for Reactive Power devices, thereby further limiting subjectivity and the potential for discretion'' in the application of the revised definition.[97]

73. The Commission agrees with NERC that this inclusion adds clarity to the application of the bulk electric system definition by providing specific criteria for reactive power devices. For cases where the reactive power device is connected through a transformer designated in inclusion I1, we seek comment on whether both the reactive power device and the transmission elements connecting the reactive power device to the transformer are included as part of the bulk electric system pursuant to inclusion I5.

2. Exclusions

74. NERC states that the proposed definition identifies four facilities configurations that should not be included in the bulk electric system: (1) Radial systems, (2) behind-the-meter generating units, (3) local networks, and (4) retail customer reactive power devices.

75. We agree that the proposed definition's exclusions provide clarity and granularity. For example, the exclusion of generating units on the customer's side of the retail meter that serves all or part of the retail load (exclusion E2) and the exclusion for reactive power devices owned and operated by a retail customer for its own use (exclusion E4) provide reasonable limitations on bulk electric system elements. While we believe that the exclusions provide added clarity, we also seek comment on certain aspects of exclusions E1 and E3 to ensure a more complete understanding of their application.

a. Exclusion E1 (Radial Systems)

76. Exclusion E1 provides as follows:

> Radial systems: A group of contiguous transmission Elements that emanates from a single point of connection of 100 kV or higher and:
>
> (a) Only serves Load. Or,
>
> (b) Only includes generation resources, not identified in Inclusion I3, with an aggregate capacity less than or equal to 75 MVA (gross nameplate rating). Or,
>
> (c) Where the radial system serves Load and includes generation resources, not identified in Inclusion I3, with an aggregate capacity of non-retail generation less than or equal to 75 MVA (gross nameplate rating).
>
> **Note**—A normally open switching device between radial systems, as depicted on prints or one-line diagrams for example, does not affect this exclusion.

NERC states that radial facilities are excluded under the currently effective bulk electric system definition, and the detailed criteria in the revised definition provide enhanced clarity.[98] We seek comment on our understanding and NERC's explanation of exclusion E1 in order for the Commission to ensure application of exclusion E1 is consistent. Also, we seek comment to determine if the configurations covered by Conditions (a), (b), or (c) of exclusion E1 remove from the bulk electric system generation connected to a radial system that otherwise satisfies inclusion I2. The Commission would like to ensure that the conditions in exclusion E1 will not lead to conflicting results when applying inclusion I2 and exclusion E1.

77. As stated above, the radial exclusion applies to ''a group of contiguous *transmission* Elements that emanates from a single point of connection of 100 kV or higher. * * *'' While the term ''Elements'' includes the term generator,[99] the use of the term ''transmission'' before ''Elements'' indicates that exclusion E1 applies only to transmission elements. The phrase ''transmission Elements'' in this provision does not apply to generating resources that are bulk electric system resources pursuant to inclusion I2 (generating resources), connected to a radial line operated at 100 kV above.[100]

i. Definition of 'Radial Systems' and Condition (a)—Radials Only Serving Load

78. NERC stated that it developed exclusion E1 to provide enhanced clarity as compared to the existing definition.[101] Exclusion E1 defines the term 'radial systems' as ''a group of contiguous transmission Elements that emanates from a single point of connection of 100 kV or higher.'' The Commission seeks comment on how NERC's proposal would be applied in the three scenarios described below.

79. Figure 1 below depicts facilities configurations in which all of the 230 kV and 69 kV transmission elements emanate from a single point of connection of 100 kV or higher. The Commission seeks comment on whether each of the radial systems shown in figure 1, the 230 kV elements above each transformer to the point of connection to each 230 kV line, respectively, are excluded from the bulk electric system pursuant to exclusion E1.

---

[94] NERC BES Petition at 18.

[95] *Id.*

[96] *Id.*

[97] *Id.*

[98] *Id.*

[99] ''Element'' is defined in the NERC Glossary as ''[a]ny electrical device with terminals that may be connected to other electrical devices *such as a generator,* transformer, circuit breaker, bus section, or transmission line. An element may be comprised of one or more components.'' (emphasis added).

[100] Our understanding comports with the NERC standard drafting team's explanation in response to industry comments that generation resources connected within the radial system are not excluded pursuant to exclusion E1. *See* NERC BES Petition, Exh. D, Consideration of Comments Report, at 223 (stating that ''Exclusion E1 is an exclusion for the contiguous transmission Elements connected at or above 100 kV. Generation resources connected within the radial system are qualifiers for this exclusion.'').

[101] NERC BES Petition at 18.

Figure 1

Two Radial Systems Eligible for Exclusion E1

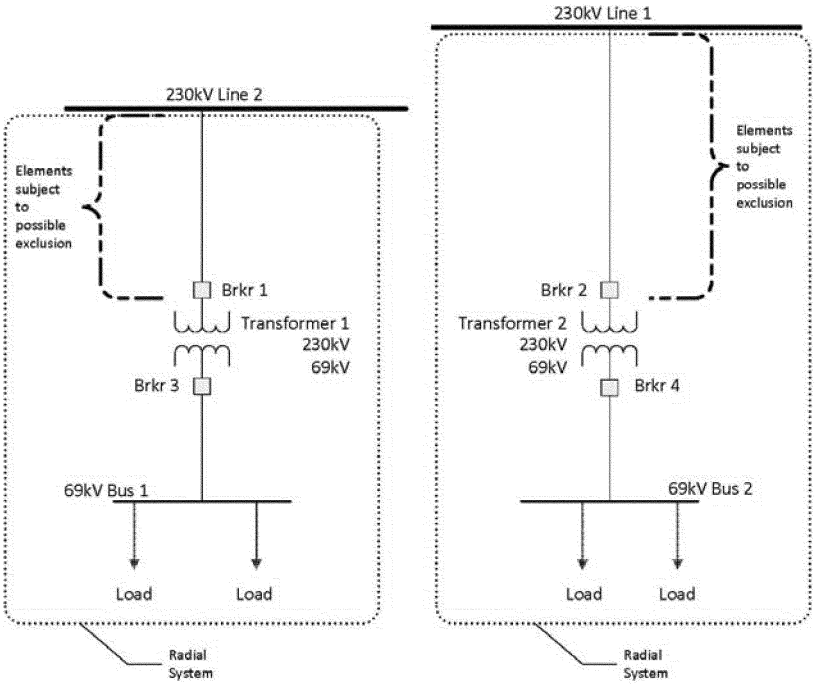

80. Another scenario shown in figure 2 below depicts a configuration containing a 115 kV loop, with the configuration emanating from two points of connection of 100 kV or higher. We seek comment whether, in this configuration, the 115 kV and 230 kV elements above Transformers 1 and 2 to the points of connection to the two 230 kV lines would be excluded from the bulk electric system pursuant to exclusion E1. Is the configuration shown in figure 2 more appropriately analyzed pursuant to the ''local network'' exclusion E3 and, if so, what if any elements operated at or above 100 kV would be excluded pursuant to exclusion E3?

Figure 2

Networked Configuration w/115 kV Loop

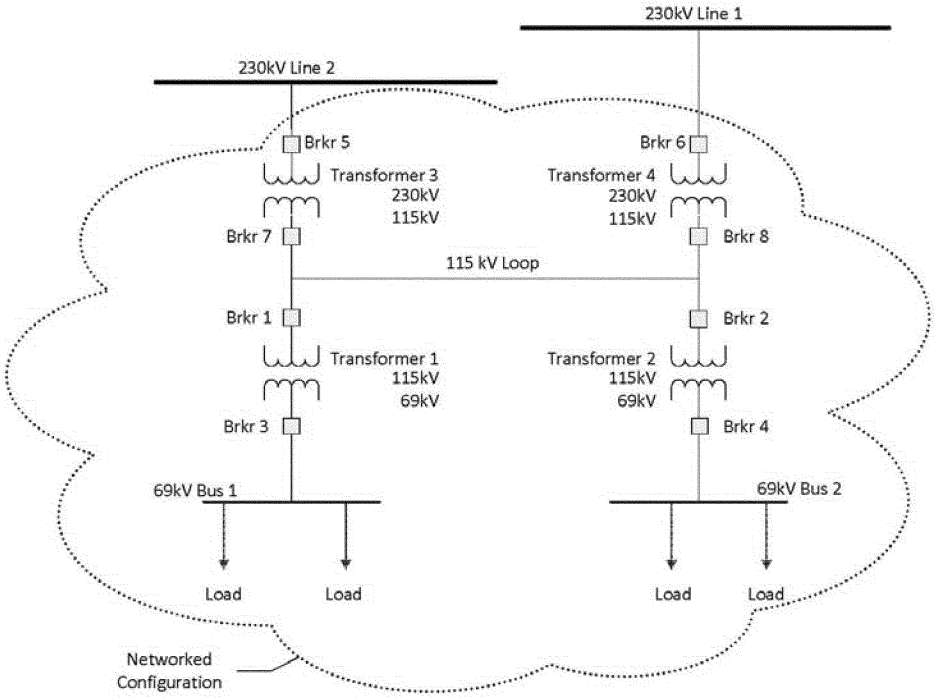

81. The Commission agrees with NERC that 'radial systems' only serving load and emanating from a single point of connection of 100 kV or higher should be excluded from the bulk electric system. The Commission is concerned that the exclusion could allow elements operating at 100 kV or higher in a configuration that emanates from two or more points of connection to be deemed ''radial'' even though the configuration remains contiguous through elements that are operated below 100 kV. For example, figure 3 below depicts a configuration with two points of connection of 100 kV or higher that are contiguous through a 69 kV loop. We seek comment on how to evaluate the configuration in figure 3 vis-à-vis the radial system definition and whether it is appropriate to examine the elements below 100 kV to determine if the configuration meets the exclusion E1 definition for radial systems. In other words, does figure 3 depict a system emanating from two points of connection at 230 kV and, therefore, the 230 kV elements above the transformers to the points of connection to the two 230 kV lines would not be eligible for the exclusion E1 notwithstanding the connection below 100 kV?

Figure 3

Networked Configuration w/69 kV Loop

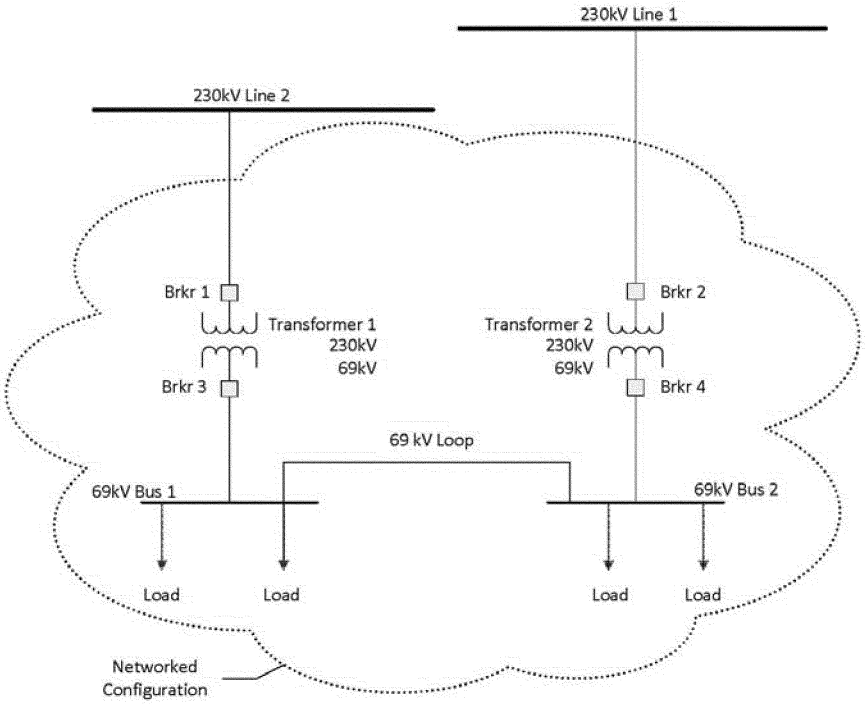

ii. Condition (b)—Radials With Limited Generation and Condition (c)—Radials With Limited Generation and Load

Condition (b) of exclusion E1 provides that a radial system is excluded if it ''[o]nly includes generation resources, not identified in Inclusion I3, with an aggregate capacity less than or equal to 75 MVA (gross nameplate rating).'' Proposed Condition (c) of exclusion E1, excludes radial systems ''[w]here the radial system serves Load and includes generation resources, not identified in Inclusion I3, with an aggregate capacity of non-retail generation less than or equal to 75 MVA (gross nameplate rating).''

82. NERC states that Conditions (b) and (c) are ''intended to address the circumstances of small utilities (including municipal utilities and cooperatives).'' [102] The NERC BES Petition, including the Exhibit E record of development, does not further explain the need for, or the impact of, these proposed provisions. Accordingly, we seek comment regarding the specific circumstances that Conditions (b) and (c) are intended to address.

83. Because Condition (b) describes generation connected to a radial system with no load and Condition (c) describes generation connected to a radial system with generation and load, it appears that the power generated on these radial systems would, by design, be delivered or injected to the bulk electric system and transported to other markets. In this circumstance, it appears that a line 100 kV or above connected to a generator with a capacity 75 MVA or below would not be included in the bulk electric system. The Commission seeks comment on the appropriateness of excluding such radials.

iii. Normally Open Switches

84. Proposed exclusion E1 includes a ''note'' stating that a ''normally open switching device between radial systems, as depicted on prints or one-line diagrams for example, does not affect this exclusion.'' NERC states that this note is intended to address a common network configuration in which two separate sets of facilities that, each standing alone, would be recognized as radial systems but are connected by a switch that is set to the open position for reliability purposes.[103]

85. NERC explains that these switches are installed by entities to provide greater reliability to their end-use customers. For example, when the entity schedules maintenance activities on a radial line or an unscheduled outage occurs that impacts a single point of supply to the radial line which could cause the disruption of power supply to the end-use customers served by the line, the switch allows the entity to use another feed on the connected radial line.

86. Figure 4 below illustrates a configuration with a normally open switch.

[102] NERC BES Petition at 19.

[103] NERC BES Petition at 19–20.

Figure 4
69 kV Networked Configuration with Normally Open Switch

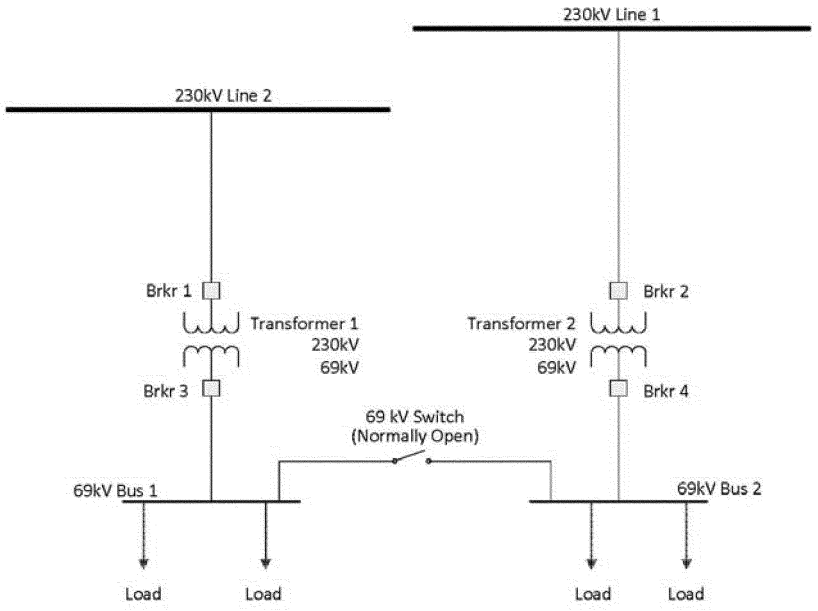

NERC states that ''[t]he concept that two sets of radial facilities that are normally unconnected to each other should be subject to * * * applicable Reliability Standards during the limited time periods when they are connected by the closing of the normally open switch in the maintenance-related or outage-related circumstances described above would be fundamentally impractical and unworkable (from both the entity's perspective and the ERO's perspective), and would misapprehend this very common, reliability-driven facilities configuration.'' [104]

87. NERC states that ''a normally open switch'' will be identified in documents such as prints or one-line diagrams and that ''[t]he concept and usage of the 'normally open switch' in such configuration is well understood in the electric utility industry.'' [105] We seek comment on NERC's characterization and whether the phrase ''normally open'' is subject to interpretation or misunderstanding, or whether a ''normally open'' configuration is potentially difficult to oversee. Further, we seek comment on the need of transmission operators or other functional entities to study the system impacts of the closing of a ''normally open'' switch, or to take other steps to ensure awareness of the impacts of the loop that is created by the closing of the switch if the closed loop is not included as part of the bulk electric system.

b. Exclusion E2 (Behind the Meter Generation)

88. Exclusion E2 excludes ''[a] generating unit or multiple generating units on the customer's side of the retail meter * * *.'' The Commission believes that this is an appropriate exclusion that provides additional clarity and granularity to the definition of bulk electric system.

c. Exclusion E3 (Local Networks)

89. As noted above, we believe that a common understanding of the exclusions promotes consistent application of the definition in identifying bulk electric system elements. In particular, as discussed in greater detail below, we seek comment on the following issues with respect to the application of exclusion E3: (1) Whether generation resources are excluded by this exclusion; (2) how the exclusion applies to a looped lower voltage system; (3) whether the 300 kV ceiling is appropriate for the application of the exclusion; (4) whether the prohibition for generation produced inside a local network is not transporting power to other markets outside the local network applies in both normal and emergency operating conditions.

90. Exclusion E3 defines the term local networks as:

> A group of contiguous transmission Elements operated at or above 100 kV but less than 300 kV that distribute power to Load rather than transfer bulk-power across the interconnected system. LN's emanate from multiple points of connection at 100 kV or higher to improve the level of service to retail customer Load and not to accommodate bulk-power transfer across the interconnected system.

Exclusion E3 also identifies three conditions that must be satisfied for the exclusion to apply: (a) Limit on connected generation to 75 MVA aggregate capacity of non-retail generation (gross nameplate rating); (b) power flows only into the local network and does not transfer through the 'local network'; and (c) the local network is not part of a flowgate or transfer path.

91. NERC states the design and operation of local networks is such that at the point of connection with the interconnected transmission network is similar to that of a radial facility, in particular that power always flows in a direction from the interconnected transmission network into the local network.[106] Further, according to NERC, ''[l]ocal networks provide local electrical distribution service and are not planned, designed or operated to benefit or support the balance of the interconnected transmission network.'' [107]

92. Similar to our discussion of the definition of 'radial systems' in

[104] *Id.* at 20–21.
[105] *Id.* at 19.
[106] NERC BES Petition at 22.
[107] *Id.*

exclusion E1, the exclusion E3 local network exclusion applies to transmission Elements, but does not apply to generation resources connected to a local network that otherwise satisfy inclusion I2.

93. NERC states in the LN Technical Paper, that ''Exclusion E3 was specifically designed to capture for exclusion those high voltage non-radial facilities being used for the local distribution of energy.'' [108] The paper further provides:

> Their [local network] design and operation is such that at the point of connection with the interconnected electric transmission network, their effect on that network is similar to that of a radial facility, particularly in that flow always moves in a direction that is from the BES into the facility. Any distribution of parallel flows into the local network from the BES, as governed by the fundamentals of parallel electric circuits, is negligible, and, more importantly, is overcome by the Load served by the local network, thereby ensuring that the net actual power flow direction will always be into the local network at all interface points. The presence of a local network is not for the operability of the interconnected electric transmission network; neither will the local network's separation or retirement diminish the reliability of the interconnected electric transmission network.'' [109]

94. We seek further explanation and comment on the statement above that ''neither will the local network's separation or retirement diminish the reliability of the interconnected electric transmission network.'' While a radial facility emanates from one point of connection to the interconnected transmission network, a local network by definition has multiple points of connection to the interconnected transmission network. Thus, regarding a local network, a contingency situation may arise where one of the multiple connections to the interconnected transmission network separates, while other local network connections maintain connectivity with the bulk electric system. We seek comments to better understand how an entity with a candidate local network would analyze such contingencies to determine potential impacts to the reliable operation of the interconnected transmission network.

i. Contiguous Transmission Elements and the 100 kV Lower Limit/300 kV Cap

95. As stated above, exclusion E3 defines local networks as ''[a] group of *contiguous* transmission Elements *operated at or above 100 kV but less than 300 kV* that distribute power to Load rather than transfer bulk-power across the interconnected system.'' While the local network exclusion applies to contiguous transmission elements operating at a minimum of 100 kV, it is unclear how the exclusion applies to a looped lower voltage system. For example, figure 5 depicts a 69 kV looped system emanating from two points of connection at 100 kV or higher.

Figure 5

Networked Configuration w/69 kV Loop

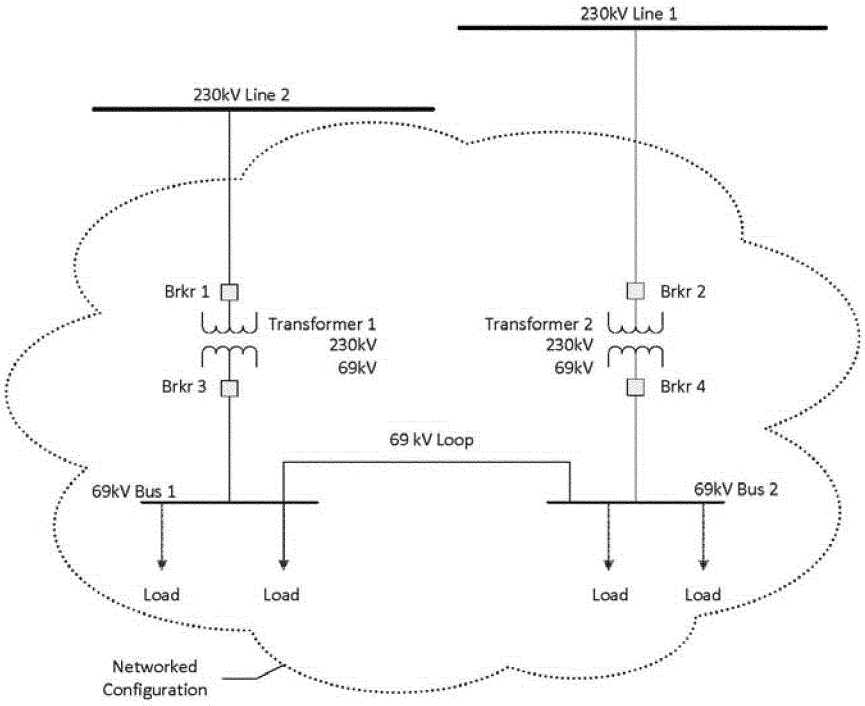

The configuration in figure 5 depicts a group of elements that are contiguous through a 69 kV loop. We seek comment whether the configuration in figure 5 qualifies as a local network and, in particular, whether the configuration satisfies the condition that a local network consists of ''a group of *contiguous* transmission Elements *operated at or above 100 kV* * * *.''

96. NERC states the selection of a 300 kV cap for the applicability of an

[108] NERC BES Petition, Exhibit G at 2.

[109] *Id.*

exclusion for a local network was based upon recent NERC standards development work in Project 2006–02 ''Assess Transmission Future Needs and Develop Transmission Plans'' which sets a voltage level of 300 kV to differentiate extra high voltage (EHV) facilities from high voltage facilities acting as a threshold to distinguish between expected system performance criteria.[110] NERC states that it seeks to establish consistency in the limitations placed on the exclusion applicability for local network facilities, and has therefore adopted this 300 kV level to ensure that EHV facilities are not subject to this exclusion.[111] NERC provides a ''realistic example of the electrical interaction between a typical local network and the [bulk electric system]'' in the LN Technical Paper.[112] The example depicted in Appendix 1 of the Technical Paper shows a local network operating at 115 kV. The NERC Technical Paper does not provide examples of a local network operating within the 200 to 300 kV range, for example showing 230 kV facilities operating in a local network. We are concerned whether the 300 kV ceiling is appropriate and reflects actual system configurations that serve local distribution, the stated purpose of the local network exclusion.[113] Accordingly, we seek comment whether (and why or why not) the 300 kV ceiling is appropriate for the application of exclusion E3 and requests examples of systems between 200 and 300 kV that would qualify for this exclusion.[114]

ii. Criterion (a)—Limits on Connected Generation

97. Exclusion E3 criterion (a) provides that the local network and its underlying elements do not include the blackstart resources identified in inclusion I3 and do not have an aggregate capacity of non-retail generation greater than 75 MVA gross nameplate rating. In addition, criterion (a) does not limit the amount of generation besides ''non-retail generation'' connected to the local network. The Commission agrees with NERC that ''local networks'' do not include blackstart resources and agrees with the limits on the connected generation imposed by this exclusion.

iii. Criterion (b)—Power Flows Only Into the Local Network

98. Exclusion E3 criterion (b) specifies that to be eligible for the exclusion, power can only flow into the local network and the local network does not transfer energy originating outside the local network for delivery through the local network. Thus, it appears that, pursuant to criterion (b), generation produced inside a local network is not transporting power to other markets outside the local network. The Commission understands that criterion (b) applies in both normal and emergency operating conditions.[115]

iv. Criterion (c)—Not Part of a Flowgate or Transfer Path

99. Exclusion E3 criterion (c) specifies a ''local network'' does not contain a monitored facility of a permanent flowgate in the Eastern Interconnection, a major transfer path within the Western Interconnection, or a comparable monitored facility in the ERCOT or Quebec Interconnections, and is not a monitored facility included in an interconnection reliability operating limit. The Commission believes that this is an appropriate criterion.

d. Exclusion E4 (Reactive Power Devices)

100. Exclusion E4 excludes from the bulk electric system ''Reactive Power devices owned and operated by the retail customer solely for its own use.'' NERC explains that exclusion E4 is the technical equivalent of Exclusion E2 for reactive power devices and that the currently effective bulk electric system definition is unclear as to how these devices are to be treated. We believe that this is an appropriate exclusion that provides additional clarity and granularity to the definition of bulk electric system.

Summary

101. In sum, we propose to approve NERC's revised definition of the term bulk electric system, including the specific inclusions and exclusions. We believe that NERC's proposal provides a reasonable basis for the identification of bulk electric system elements and appears to improve upon the currently effective definition by: (1) Removing the language that provides for regional discretion, (2) removing the language ''generally operated at * * *'' so as to create a clear 100 kV threshold; and (3) providing additional clarity and granularity. Above, we have asked for comment on a series of questions regarding the applicability of the ''core'' definition and specific inclusions and exclusions. We believe that comments on these questions will assist in providing further clarity and understanding of the NERC proposal. We further note that although we propose to approve the definition in this rulemaking, the responses to our questions are intended to guide the Commission as to whether other action is necessary, for example, by directing NERC to develop a further modification to the definition or inclusions/exclusions pursuant to section 215(d)(5) of the FPA.

C. The Commission Proposes To Approve the NERC Rules of Procedure That Provide a Case-Specific Exception Process

102. As described above, in Docket No. RM12–7–000, NERC submitted proposed revisions to its Rules of Procedure that provide procedures for requesting and receiving case-specific exception from the definition of bulk electric system.[116]

103. Pursuant to FPA section 215(f), we propose to find that the exception process is just, reasonable, not unduly discriminatory or preferential, and in the public interest and satisfies the requirements of section 215(c). Further, we believe that the proposal satisfies the statement in Order No. 743 that NERC establish an exception process for excluding facilities that are not necessary for the reliable operation of the interconnected transmission network from the definition of the bulk electric system.[117]

104. NERC explains that it was not feasible to develop a single set of technical criteria that would be applicable to all exception requests so it developed the Detailed Information Form to ensure that a consistent baseline of technical information is provided for NERC to make a decision on all exception requests. This information and the proposed exception process allows NERC to provide consistent determinations on exception requests submitted from different

[110] NERC BES Petition at 23.

[111] *Id.* at 23 and Exh. G at 4.

[112] *Id.,* Exh. G at 5.

[113] The Commission notes additional differentiations may directly address this concern, such as applying a load limit, which was raised by the NERC System Analysis and Modeling Subcommittee (SAMS) in its effort to support Phase 2 of the bulk electric system definition project as a criterion to limit the exclusion of large cities and regions.

[114] To the extent the information requested is confidential, commenters may provide the information pursuant to 18 CFR 388.112 of the Commission's regulations.

[115] *See* NERC BES Petition, Exh. E at 59 (''The Commission directed NERC to revise its BES definition to ensure that the definition encompasses all Facilities necessary for operating an interconnected electric Transmission network. The SDT interprets this to include operation under both normal and Emergency conditions * * *.'').

[116] *See* Section I.D.2 above for further description of NERC's proposed revisions to the NERC Rules of Procedure.

[117] *See* Order No. 743, 133 FERC ¶ 61,150 at P 16.

regions involving the same or similar facts and circumstances, and allows NERC to take into account the aggregate impact on the bulk electric system of approving or denying all the exception requests. Finally, the exception process includes provisions for reporting information that may alter the status of an approved exception, verifying whether an exception continues to be warranted, and revoking an exception that is no longer warranted.[118] Thus, we believe that this process is equally efficient and effective as the Order No. 743 directive to establish an exception process for excluding facilities that are not necessary for the reliable operation of the interconnected transmission network. In addition, we believe that NERC's proposal appears to be clear, transparent, and uniformly applicable.

105. NERC and the industry should be commended for the development of the 100 kV threshold, the identified inclusions and exclusions, and the exception process. Together, this package of important reforms will bring valuable improvements to the process of identifying those facilities that are necessary for the operation of the interconnected transmission network, and thus should be included in the definition of bulk electric system. For these reasons, we propose to approve NERC's proposals, as discussed above.

106. The Commission seeks input from NERC and the industry, however, as to additional reforms that may be needed to the definition or to the Rules of Procedure to ensure that, over the long term, the facilities necessary to the reliability of the interconnected transmission network are captured in its definition. In particular, we note that while establishing a ''bright-line'' threshold of 100 kV has significant advantages, it may not capture all facilities that are necessary for the operation of the interconnected transmission network that fall below that threshold. As the Commission indicated in Order No. 743 and Order No. 743–A, its goal is that the definition of bulk electric system should include all facilities necessary for the operation of the interconnected transmission network, except for local distribution. Although the Commission indicated that one way to meet this goal was to establish a 100 kV ''bright-line'' threshold, the Commission also made clear that the ''bright-line'' threshold would be a ''first step or proxy'' in determining which facilities should be included in the bulk electric system.[119] Indeed, the Commission, agreeing with commenters, held that NERC should not necessarily stop at 100 kV and should, through the development of the exception process, ensure that ''critical'' facilities operated at less than 100 kV, and that the Regional Entities determine are necessary for operating the interconnection network.[120] The Commission clarified that including sub-100 kV facilities should be done in an ''appropriate and consistent'' manner.[121]

107. Recent events reinforce the Commission's statements in Order Nos. 743 and 743–A with respect to ensuring that sub-100 kV facilities, as appropriate, are included in the bulk electric system. The September 2011 Blackout Report concluded that certain sub-100 kV facilities, which were not designated as bulk electric system facilities, contributed to the cascading blackout affecting San Diego, California.[122] The September 2011 Blackout Report makes clear that, while certain sub-100 kV facilities can affect bulk electric system reliability, entities may not study or communicate their impacts and take appropriate action unless they are properly designated as part of the bulk electric system.[123] Thus, the September 2011 Blackout Report recommended that ''WECC, as the [Regional Entity], should lead other entities, including [transmission operators] and [balancing authorities], to ensure that all facilities that can adversely impact [Bulk-Power System] reliability are either designated as part of the [bulk electric system] or otherwise incorporated into planning and operations studies and actively monitored and alarmed in [real-time contingency analysis] systems.'' [124] Although the Blackout Report addressed an event in WECC, the recommendations in the Blackout Report should not be limited only to the Western interconnection. Indeed, as explained above, the recommendation in the September 2011 Blackout Report that sub-100 kV facilities be reviewed for inclusion in the bulk electric system is consistent with the Commission's findings in Order Nos. 743 and 743–A.

108. The NERC proposals at issue in this NOPR take steps to address the treatment of sub-100 kV facilities, as well as other facilities, necessary for the operation of the interconnected transmission network, through the exception process, which provides an avenue for Regional Entities, planning authorities, reliability coordinators, transmission operators, transmission planners, balancing authorities, and owners of system elements to submit a request to include a facility in the bulk electric system. We believe that regional entities, reliability coordinators, transmission owners, transmission operators, balancing authorities and other registered entities need to evaluate their sub-100 kV facilities, as well as other facilities, that are necessary to operate the interconnected transmission network in an ''appropriate and consistent'' manner to determine their potential impacts on bulk electric system reliability and, based on that review, seek to include those facilities in the bulk electric system through this proposed exception process.[125] These entities have the in-depth, ''on the ground'' knowledge and expertise of what facilities are critical to reliable operations in their local or regional area. As a result, we believe they bear primary responsibility to analyze the elements within their purview to ensure that the right facilities are included in the bulk electric system. We seek comment on how the relevant entities will conduct the review and seek inclusion of facilities.

109. The Commission expects that these entities will use the exception process as contemplated to include sub-100 kV facilities, and other facilities, necessary for the operation of the interconnected transmission network in the bulk electric system. Nonetheless, we note that relying on these entities alone may, in certain limited circumstances, have the potential to leave out sub-100 kV facilities necessary for the operation of the interconnected transmission network. For example, NERC or the Commission may, in the performance of their statutory functions and general oversight of reliability matters, discover additional sub-100 kV facilities that should be included. The joint NERC–FERC September 2011 Blackout Report, as noted above, is a prime example of this possibility. In addition, while we recognize that the owners and operators of the power grid take their reliability obligations seriously, there may be instances when not all of the facilities necessary for the operation of the interconnected transmission network are included in the bulk electric system.

110. Thus, while we propose to approve the package of reforms submitted by NERC, we seek comment

[118] NERC ROP Petition at 16.

[119] Order No. 743–A, 134 FERC ¶ 61,210 at P 40.

[120] Order No. 743, 133 FERC ¶ 61,150 at P 121.

[121] Order No. 743–A, 134 FERC ¶ 61,210 at P 103.

[122] *See* September 2011 Blackout Report at 96–97.

[123] *Id.* at 7–8.

[124] *Id.* at 96, Recommendation 17.

[125] NERC's performance of a final review of exception requests under the Rules of Procedure should ensure national consistency under that procedure.

on how the relevant entities will seek inclusion of sub-100 kV elements to ensure that all facilities that are necessary for the operation of the bulk power system are designated as bulk electric system elements consistent with the discussion above. These comments also should aid NERC, industry, and the Commission in further efforts, already underway in Phase 2, to refine the bulk electric system definition, the inclusions and exclusions, and the exception process.

111. In addition to general comments on the discussion above, we seek comments on the role NERC should have in initiating the designation of (or directing others to initiate the designation of) sub-100 kV facilities, or any other facilities, necessary for the operation of the interconnected transmission network for inclusion in the bulk electric system. The exception process as proposed does not provide that NERC may initiate an exception request. Given its statutory functions to develop and enforce Reliability Standards and its continent-wide perspective, NERC has technical understanding that may provide valuable assistance in the identification of bulk electric system facilities and elements. For example, NERC conducts disturbance assessments, oversees compliance monitoring and conducts seasonal assessments, all of which provide information and understanding regarding the operations of the bulk electric system. The Commission seeks comment on the role NERC should have in designating sub-100 kV facilities, and other facilities, for inclusion in the bulk electric system, directing Regional Entities or others to conduct such reviews, or itself nominating an element to be included in the bulk electric system.[126]

112. We also seek comment on the role the Commission should have with respect to the designation of sub-100 kV facilities, or other facilities, necessary for the operation of the interconnected transmission network for inclusion in the bulk electric system. As noted above, there may be circumstances (like the September 2011 Blackout Report) where the Commission, through the performance of its statutory functions, may conclude that certain sub-100 kV facilities not already included in the bulk electric system are necessary for the operation of the interconnected transmission network and thus should be included in the bulk electric system. While, as noted above, we expect that regional entities and others will take affirmative steps to review and include sub-100 kV elements and facilities, and other facilities, necessary for the operation of the interconnected transmission system in the bulk electric system, we seek comment as to how the Commission, if necessary, could ensure that such facilities are considered for inclusion in the bulk electric system. We also seek comment on instances when the Commission itself should designate (or direct others to designate) sub-100 kV facilities, or other facilities, necessary for the operation of the interconnected transmission grid for inclusion in the bulk electric system.[127]

1. Technical Review Panel

113. NERC's proposed exception process provides that ''[t]he Regional Entity shall not recommend Disapproval of the Exception Request in whole or in part without first submitting the Exception Request for review to a Technical Review Panel and receiving its opinion * * *''[128] The technical review panel member must have the required technical background, must not have participated in the review of the exception request, and not have a conflict of interest in the matter.[129] The Regional Entity is not bound by the opinion of the panel, but the panel's evaluation becomes part of the record associated with the exception request and provided to NERC.

114. We see value in the Regional Entity receiving the independent opinion of a qualified technical review panel. NERC, however, does not explain why the proposed rules only require a technical review panel to provide an opinion where the Regional Entity recommends disapproval of an exception request. We seek comment from NERC explaining whether it considered obtaining the opinion of a technical panel for all Regional Entity recommendations and, if so, why the review is only required when a Regional Entity disapproves a request. Further, we seek comment on whether NERC should modify the exception process to require Regional Entities to submit all proposed determinations to a technical review panel regardless of the recommendation and receive the panel's opinion on each request.

2. Use of Industry Subject Matter Experts

115. Section 8 of the proposed exception process sets forth the procedures for NERC's review of a Regional Entity's recommendation. The NERC President will appoint a team of at least three persons with the technical background to evaluate an exception request. The members of the review team must have no financial, contractual, employment or other interest in the submitting entity or owner that would present a conflict of interest and must be free of any conflicts of interest in accordance with NERC policies.[130] NERC states that ''at the present time NERC anticipates that its review teams would be drawn from NERC staff resources, supplemented by contractors as necessary particularly where needed to provide specific relevant subject matter expertise. However, situations may arise in which NERC may need to call on industry subject matter experts to participate as members of review teams.''[131]

116. We support NERC's proposal to use staff resources, supplemented by contractors as necessary, to make up the exception request review teams. We believe that consistent appointment of the same NERC staff and contractor resources, based on subject matter expertise, will promote a more uniform and consistent review of the Regional Entities' exception request recommendations.

D. The Commission Proposes To Approve NERC's Detailed Information Form

117. As described above, NERC developed the Detailed Information Form that the Regional Entity and NERC can use in evaluating whether or not the elements that are the subject of an exception request are necessary for operating the interconnected transmission network. The Detailed Information Form encompasses a wide range of potential configurations and appears to ensure that a consistent baseline of technical information is provided with all exception requests, in addition to the specific information and arguments provided by the submitting entity in support of its exception request. The information that the applicant may submit in support of an exception request will not be limited to the Detailed Information Form. The applicant will be expected to submit all relevant data, studies and other information that supports its exception request. Further, NERC may ask the

[126] Since NERC makes the final determination pursuant to the proposed process, a modified process may need to be created if NERC has a role in submitting requests. For example, a different entity would likely need to make the final determination.

[127] The Commission contemplates that, if it were to take such a step, it would provide an opportunity for notice and comment.

[128] NERC ROP Petition, Att. 1, Proposed App. 5C to the Rules of Procedure, section 5.2.4.

[129] *Id.* at App. 5C, section 5.3.

[130] NERC ROP Petition at 31.

[131] *Id.* at n. 29.

submitting entity to provide other data, studies and information in addition to the Detailed Information Form and the other information included by the applicant in the exception request.

118. We believe that this information will provide consistency with respect to the technical information provided with all exception requests and is an equally efficient and effective approach to developing a substantive set of technical criteria for granting and rejecting exception requests. Accordingly, we propose to approve the Detailed Information Form included in NERC's filing.

E. The Commission Proposes To Approve NERC's Implementation Plan for the Revised Definition of Bulk Electric System

119. As noted above, NERC requests that the revised definition ''should be effective on the first day of the second calendar quarter after receiving applicable regulatory approval, or, in those jurisdictions where no regulatory approval is required, the revised [bulk electric system definition] should go into effect on the first day of the second calendar quarter after its adoption by the NERC Board.[132]

120. NERC also requests that compliance obligations for all elements newly-identified to be included in the bulk electric system based on the revised definition should begin twenty-four months after the applicable effective date of the revised definition. While the Commission stated in Order Nos. 743 and 743–A that the transition period should not exceed 18 months from the date of Commission approval of the revised definition, the Commission also stated that it could approve a longer transition period based on specific justification.[133] NERC states that sufficient time is needed: (1) To implement transition plans in order to accommodate any changes resulting from the revised definition; (2) for entities to file for exceptions, and for the Regional Entities and NERC to process those exceptions to a final determination, pursuant to the proposed exception process; and (3) for owners of facilities and elements that are newly-included in the bulk electric system based on the definition to train their personnel on compliance with the Reliability Standards applicable to the newly-included facilities and elements, so that these entities can achieve compliance with applicable Reliability Standards by the end of the transition period. We believe that NERC has provided adequate justification for its implementation plan, as discussed above. Thus, although NERC's plan exceeds the 18 month implementation period set forth in Order No. 743, we propose to approve NERC's implementation plan.

F. NERC List of Facilities Granted Exceptions

121. In Order No. 743, the Commission stated that ''a Commission staff audit would review the application of the exemption criteria developed by NERC in NERC's or a Regional Entity's determination to approve an exemption for a particular facility.'' The Commission also stated that ''to facilitate such audits, the ERO should maintain a list of exempted facilities that can be made available to the Commission on request. NERC can decide how best to maintain the list, including determining whether or not to post it on the NERC Web site.'' [134]

122. NERC states that the proposed exception process does not include provisions for NERC to maintain a list of facilities that have received exceptions, as this is an internal administrative matter for NERC to implement that does not need to be embedded in NERC Rules of Procedure.[135] NERC states it will develop a specific internal plan and procedures for maintaining a list of facilities for which exceptions have been granted. Further, NERC explains that it has not yet determined how the list will be organized and structured and under what conditions the list will be made available on the NERC Web site or otherwise made available to any entities other than the Commission, citing concerns about confidential information and critical energy infrastructure information.[136]

123. We understand that NERC is continuing to develop the details on how it will maintain the list of facilities that have received exceptions. However, we also consider the maintenance of this list of facilities an important feature for tracking exceptions.[137] Thus, we propose that NERC file an informational filing within 90 days of the effective date of a final rule, detailing its plans to maintain a list and how it will make this information available to the Commission, Regional Entities, and potentially to other interested persons. We seek comment from NERC whether this deadline provides adequate time for NERC to finalize its plans and submit an informational filing.

124. While NERC states that it will maintain a list of facilities that have received an exception pursuant to the case-specific exception process, the petition does not indicate whether NERC will track an entity's ''declassification'' of current bulk electric system facilities based on the entity's self-application of the bulk electric system definition. It appears that, in some circumstances, the appropriate Regional Entity would receive a request that an entity be removed from the NERC Compliance Registry. For example, if an entity determines that its entire system satisfies the exclusion E1 for radial systems, the entity could apply to the appropriate Regional Entity to be removed from the NERC Compliance Registry. However, in other circumstances, it is not clear what, if any, notification an entity would provide to NERC or a Regional Entity when the entity self-determines that an element is no longer part of the bulk electric system. For example, a large utility with hundreds or thousands of transmission lines may initially determine that a configuration on its system does not qualify for the exclusion E3 local network exclusion, but subsequently determines that the configuration can be excluded. NERC's petition does not indicate whether an entity in such circumstance is obligated to inform NERC or the appropriate Regional Entity of that self-determination. It appears that NERC and the Regional Entities would need this information for their compliance programs, for audit purposes, and to understand the contours of the bulk electric system within a particular region. Accordingly, we seek comment on whether NERC's proposal should be modified to include an obligation for the registered entity to inform NERC or the Regional Entity of the entity's self-determination through application of the definition and specific exclusions E1 through E4 that an element is no longer part of the bulk electric system.

III. Information Collection Statement

125. The following collection of information contained in this Proposed Rule is subject to review by the Office of Management and Budget (OMB) under section 3507(d) of the Paperwork Reduction Act of 1995.[138] OMB's regulations require approval of certain information collection requirements

[132] NERC BES Petition at 34.

[133] Order No. 743, 133 FERC ¶ 61,150 at P 131.

[134] *Id.* PP 117, 119.

[135] NERC ROP Petition at 49.

[136] *Id.*

[137] Order No. 743, 133 FERC ¶ 61,150 at PP 117, 119.

[138] 44 U.S.C. 3507(d) (2006).

imposed by agency rules.[139] The Commission solicits comment on the Commission's need for this information, whether the information will have practical utility, the accuracy of the burden estimates, ways to enhance the quality, utility, and clarity of the information to be collected or retained, and any suggested methods for minimizing respondents' burden, including the use of automated information techniques. Specifically the Commission asks that any revised burden estimates submitted by commenters be supported by sufficient detail to understand how the estimates are generated.

126. In Order No. 693, the Commission approved NERC's definition of the term bulk electric system and the associated information requirements.

127. In Order No. 743, the Commission directed NERC to develop a revised ''bulk electric system'' definition. The Commission explained that, by directing NERC to develop a revised definition, ''the Commission is maintaining the status quo (i.e., the current bulk electric system definition) until the Commission approves a revised definition. Thus, the Commission's action does not add to or increase entities' reporting burden.'' [140]

128. The immediate NOPR proposes to approve the revision to the definition of ''bulk electric system'' developed by NERC and an exception process to include or exclude specific elements in the definition of ''bulk electric system'' on a case-by-case basis. The Commission is basing its burden estimate below on the revised definition of ''bulk electric system'' developed by NERC.

129. The proposal in this NOPR would result in entities reviewing systems and creating qualified asset lists, submitting exception requests where appropriate, and certain responsible entities having to comply with requirements to collect and maintain information in mandatory Reliability Standards with respect to certain facilities for the first time.

130. *Public Reporting Burden:* While the Commission requests comment concerning the information collections proposed in this NOPR and the associated burden estimates, in particular, the Commission requests comment on the following issues.

131. First, we request comment on the estimated number of entities that will have an increased reporting burden associated with the identification of new bulk electric system elements as a result of the modified definition. NERC states in its filing that ''[i]t was not the intent nor the expectation of either the [standard drafting team] or NERC to either expand or reduce the scope of the [bulk electric system], or (with the likely exception of the NPCC Region) to increase or decrease the number of Elements included in the [bulk electric system], through the revised [bulk electric system] definition as compared to the current [bulk electric system] definition.'' [141] NERC adds that it has no specific basis to determine to ''the extent Elements currently included in the [bulk electric system] will become not included, nor to what extent Elements currently not included will become included.'' [142] In developing an estimate of the reporting burden associated with the inclusion of additional elements, like NERC, we assume that entities in the NPCC Region will be most affected, with a lesser affect in other regions.[143]

132. We reviewed Compliance registry information for the NPCC Region to determine the number and types of registered entities in the U.S. portion of the NPCC Region.[144]

We expect that transmission owners and distribution providers, and some generator owners, are most likely to identify new elements. Based on this, we estimate a range from 66 to 155 affected entities in the NPCC region, and for OMB reporting purposes identify below a median number of 111 affected entities in the NPCC region. Further, consistent with NERC's explanation, we do not expect a significant number of registered entities outside of the NPCC region to identify new elements under the revised bulk electric system definition. Accordingly, we estimate a total of 75 entities outside of the NPCC Region having new ''implementation plan and compliance'' related reporting burdens. We seek comment on these estimates to assist the Commission in arriving at final estimates.

133. Second, we seek comment on the reporting burden associated with exception requests. NERC indicates that ''there is currently not a basis for estimating the numbers of Exceptions Requests that will be submitted * * *.'' [145] We agree with NERC that there is difficulty in estimating a specific number of exception requests as this is a new process with no ''track record.'' Thus, rather than estimating a specific number of exception requests, we estimate a range of exception requests that may be submitted. As indicated in the table below, from the 1,730 total transmission owners, generator owners and distribution providers in the Compliance Registry, we estimate a range of 87 to 433 exception requests per year for each of the first two years after the effective date of a final rule. We request comment on this estimated range to assist the Commission in arriving at a final estimate of the number of possible exception requests.

134. Third, as indicated above, our estimates are based in part on an expectation that transmission owners, generator owners and distribution providers will experience more significant reporting burdens than other categories of registered entities. We seek comment on this expectation, and whether and to what extent other categories of registered entities (in addition to transmission owners, generator owners and distribution providers) may have a public reporting burden.

135. We estimate that the increased Public Reporting Burden for this Proposed Rule is as follows:

[138] 44 U.S.C. 3507(d) (2006).

[139] 5 CFR 1320.11 (2011).

[141] NERC BES Petition at 37.

[142] *Id.*

[143] While Reliability Standards do not require the reporting of information directly to the Commission, the application of Reliability Standards to additional facilities will have associated information collection and retention obligations.

[144] NPCC Compliance Registry information is available on the NPCC Web site at: *https://www.npcc.org/Compliance/Default.aspx.*

[145] NERC BES Petition at 38.

Requirement	Number and type of entity [146] (1)	Number of responses per entity (2)	Average number of hours per response (3)	Total burden hours (1)*(2)*(3)
System Review and List Creation [147].	333 Transmission Owners	1 response	80 (engineer hours)	26,640 Yr 1.
	843 Generator Owners		16 (engineer hours)	13,488 Yr 1.
	554 Distribution Providers		24 (engineer hours)	13,296 Yr 1.
Exception Requests [148]	1,730 total Transmission Owners, Generator Owners and Distribution Providers.	.15 responses in Yrs 1 and 2.	94 (60 engineer hrs, 32 record keeping hrs, 2 legal hrs).	24,393 hrs in Yrs 1 and 2.
		0.01156 responses in Yr 3 and ongoing.		1,880 hrs in Yr 3 and ongoing.
Regional and ERO Handling of Exception Requests [149].	NERC and 8 Regional Entities.	1 response	1,386.67 hrs	12,480 hrs in Yrs 1 and 2.
Implementation Plans and Compliance [150].	111 NPCC Region Registered Entities [151].	1 response	700 hrs in Yrs 1 and 2	77,700 hrs in Yrs 1 and 2.
			350 hrs in Yr 3 and ongoing.	38,850 hrs in Yr 3 and ongoing.
	75 Registered Entities from 7 other Regions.	1 response	700 hrs in Yrs 1 and 2	52,500 hrs in Yrs 1 and 2.
			350 hrs in Yr 3 and ongoing.	26,250 hrs in Yr 3 and ongoing.
Totals				220,497 hrs in Yr 1.
				167,073 hrs in Yr 2.
				66,980 hrs in Yr 3 and ongoing.

Information Collection Costs: The Commission seeks comment on the costs to comply with these requirements. These cost estimates are calculated using the average of the ranges suggested in the burden hour estimates. It has projected the annual cost to be:

- *Year 1:* $13,641,200.
- *Year 2:* $10,435,760.
- *Year 3 and ongoing:* $4,343,520.

For the first two burden categories above, the loaded (salary plus benefits) costs are: $60/hour for an engineer; $27/hour for recordkeeping; and $106/hour for legal. The breakdown of cost by item and year follows:

- *System Review and List Creation (year 1 only):* (26,640 hrs + 13,488 hrs + 13,296 hrs) = 53,424 hrs * 60/hr = $3,205,440.
- *Exception Requests (years 1 and 2):* (sum of hourly expense per request * number of exception requests) = ((60 hrs * $60/hr) + (32 hrs * $27/hr) + (2 hrs * $106/hr)) * 260 requests) = $1,215,760.
- *Exception Requests (year 3):* (sum of hourly expense per request * number of exception requests) = ((60 hrs * $60/hr) + (32 hrs * $27/hr) + (2 hrs * $106/hr)) * 20 requests) = $93,520.
- *Regional and ERO handling of Exception Requests:* Between NERC and regional entities we estimate 6 full time equivalent (FTE) engineers will be added at an annual cost of $120,000/FTE ($120,000/FTE * 6 FTE = $720,000). This cost is only expected in years 1 and 2.

[146] The ''entities'' listed in this table are describing a role a company is registered for in the NERC registry. For example, a single company may be registered as a transmission owner and generator owner. The total number of companies applicable to this rule is 1,522, based on the NERC registry. The total number of estimated roles is 1,730.

[147] This requirement corresponds to Step 1 of NERC's proposed transition plan, which requires each U.S. asset owner to apply the revised bulk electric system definition to all elements to determine if those elements are included in the bulk electric system pursuant to the revised definition. *See* NERC BES Petition at 38.

[148] We recognize that not all 1,730 transmission owners, generator owners and distribution providers will submit an exception request. Rather, from the total 1,730 entities, we estimate an average of 260 requests per year in the first two years, based on a low to high range of 87 to 433 requests per year. Therefore, the estimated total number of hours per year for years 1 and 2, using an average of 260 requests per year, is 24,393 hours. We estimate 20 requests per year in year 3 and ongoing.

[149] Based on the assumption of two full-time equivalent employees added to NERC staff and 0.5 full-time equivalent employees added to each region's staff, each full-time equivalent at $120,000/year (salary + benefits).

[150] The Commission does not expect a significant number of registered entities outside of the NPCC region to identify new elements under the revised bulk electric system definition. NERC also states that the other Regional Entities do not expect an extensive amount of newly-included facilities. *See* NERC BES Petition at 38. ''Compliance'' refers to entities with new elements under the new bulk electric system definition required to comply with the data collection and retention requirements in certain Reliability Standards that they did not previously have to comply with.

[151] The estimated range of affected NPCC Region Registered Entities is from 66 to 155 entities.

• *Implementation Plans and Compliance* [152] *(years 1 and 2):* (hourly expense per entity * hours per response * sum of NPCC and non-NPCC entities) = ($64/hour * 700 hours per response * 186 responses) = $8,332,800.

• *Implementation Plans and Compliance (year 3 and beyond):* We estimate the ongoing cost for year 3 and beyond, at 50% of the year 1 and 2 costs, to be $4,166,400.

Title: FERC–725–J ''Definition of the Bulk Electric System.'' [153]

Action: Proposed Collection of Information.

OMB Control No.: To be determined.

Respondents: Business or other for profit, and not for profit institutions.

Frequency of Responses: On Occasion.

Necessity of the Information: The proposed revision to NERC's definition of the term bulk electric system, if adopted, would implement the Congressional mandate of the Energy Policy Act of 2005 to develop mandatory and enforceable Reliability Standards to better ensure the reliability of the nation's Bulk-Power System. Specifically, the proposal would ensure that certain facilities needed for the operation of the nation's bulk electric system are subject to mandatory and enforceable Reliability Standards.

Internal Review: The Commission has reviewed the proposed definition and made a determination that its action is necessary to implement section 215 of the FPA. The Commission has assured itself, by means of its internal review, that there is specific, objective support for the burden estimate associated with the information requirements.

136. Interested persons may obtain information on the reporting requirements by contacting the Federal Energy Regulatory Commission, Office of the Executive Director, 888 First Street NE., Washington, DC 20426 [Attention: Ellen Brown, email: *DataClearance@ferc.gov,* phone: (202) 502–8663, fax: (202) 273–0873].

137. Comments concerning the information collections proposed in this NOPR and the associated burden estimates, should be sent to the Commission in this docket and may also be sent to the Office of Management and Budget, Office of Information and Regulatory Affairs [Attention: Desk Officer for the Federal Energy Regulatory Commission]. For security reasons, comments should be sent by email to OMB at the following email address: *oira_submission@omb.eop.gov.* Please reference FERC–725J and the docket numbers of this Proposed Rulemaking (Docket Nos. RM12–6–000 and RM12–7–000) in your submission.

IV. Regulatory Flexibility Act Analysis

138. The Regulatory Flexibility Act of 1980 (RFA) [154] generally requires a description and analysis of Proposed Rules that will have a significant economic impact on a substantial number of small entities. As discussed above, the Commission believes that the immediate effect of the proposal to approve the modification to the definition of bulk electric system and the exception process would likely be limited to certain transmission owners, generator owners and distribution service providers, as well as NERC and Regional Entities. Many transmission owners, generator owners and distribution service providers do not fall within the definition of small entities.[155] The Commission estimates that approximately 418 [156] of the 1,730 registered transmission owners, generator owners and distribution service providers may fall within the definition of small entities.[157]

139. The Commission estimates that of the 418 small entities affected there are 50 within the NPCC region that would have to comply with the Proposed Rule. The Commission assumes that the Proposed Rule would affect more small entities in the NPCC Region than those outside NPCC as it is assumed that there are more elements in NPCC that would be added to the bulk electric system based on the new definition than elsewhere. The Commission estimates the first year affect on small entities within the NPCC region to be $39,414.[158] This figure is based on information collection costs plus additional costs for compliance.[159] The Commission estimates the average annual affect per small entity outside of NPCC will be less than for the entities within NPCC. The Commission does not consider this to be a significant economic impact for either class of entities because it should not represent a significant percentage of the operating budget. Accordingly, the Commission certifies that this Proposed Rule will not have a significant economic impact on a substantial number of small entities. The Commission seeks comment on this certification.

V. Environmental Analysis

140. The Commission is required to prepare an Environmental Assessment or an Environmental Impact Statement for any action that may have a significant adverse effect on the human environment.[160] The Commission has categorically excluded certain actions from this requirement as not having a significant effect on the human environment. The actions proposed here fall within the categorical exclusion in the Commission's regulations for rules that are clarifying, corrective or procedural, for information gathering, analysis, and dissemination.[161] Accordingly, neither an environmental impact statement nor environmental assessment is required.

[152] The cost and hourly burden calculations for this category are based on a past assessment (NPCC Assessment of Bulk Electric System Definition, September 14, 2009.). In that assessment NPCC indicated $8.9 million annually for operations, maintenance and additional costs. We estimated that roughly half of that cost actually relates to information collection burden. Using the resulting figure, we used a composite wage and benefit figure of $64/hour to estimate the hourly burden figures presented in the burden table.

[153] All of the information collection requirements for years 1–3 in the proposed rule are being accounted for under the new collection FERC–725J.

[154] 5 U.S.C. 601–612 (2006).

[155] The RFA definition of ''small entity'' refers to the definition provided in the Small Business Act (SBA), which defines a ''small business concern'' as a business that is independently owned and operated and that is not dominant in its field of operation. *See* 15 U.S.C. 632 (2006). According to the SBA, an electric utility is defined as ''small'' if, including its affiliates, it is primarily engaged in the generation, transmission, and/or distribution of electric energy for sale and its total electric output for the preceding fiscal year did not exceed 4 million megawatt hours.

[156] We note that in Order No. 693, the Commission estimated that the Reliability Standards in that the Final Rule would apply to approximately 682 small entities. *See* Order No. 693, FERC Stats. & Regs. ¶ 31,242 at P 1940. Because the current Proposed Rule would affect a smaller subset of the categories of registered entities, our estimate is lower than that cited in Order No. 693.

[157] The number of small entities is generated by comparing the NERC compliance registry with data submitted to the Energy Information Administration on Form EIA–861. Note, these numbers do not account for companies that may be registered in more than one role. For companies registered in more than one role, the burden will likely be higher than for those companies registered in only one role. We estimate that there are 381 companies and 418 registered roles, meaning that several companies are registered in more than one role. We do not believe this affects the certification below.

[158] For companies registered as more than one entity in the NERC compliance registry this figure will increase accordingly. That is, if a company is registered as a transmission owner and generator owner then the cost burden would be $78,828 ($39,414 * 2 = $78,828).

[159] We use fifty percent of the first year ''number of hours per response'' figure in the information collection statement for calculation under the assumption that smaller entities do not have complicated systems or will not have as many new elements on average as larger entities do.

[160] Order No. 486, *Regulations Implementing the National Environmental Policy Act,* 52 FR 47897 (Dec. 17, 1987), FERC Stats. & Regs. Regulations Preambles 1986–1990 ¶ 30,783 (1987).

[161] 18 CFR 380.4(a)(5).

VI. Comment Procedures

141. The Commission invites interested persons to submit comments on the matters and issues proposed in this notice to be adopted, including any related matters or alternative proposals that commenters may wish to discuss. Comments are due September 4, 2012. Comments must refer to Docket Nos. RM12–6–000 and RM12–7–000, and must include the commenter's name, the organization they represent, if applicable, and their address in their comments.

142. The Commission encourages comments to be filed electronically via the eFiling link on the Commission's Web site at *http://www.ferc.gov.* The Commission accepts most standard word processing formats. Documents created electronically using word processing software should be filed in native applications or print-to-PDF format and not in a scanned format. Commenters filing electronically do not need to make a paper filing.

143. Commenters that are not able to file comments electronically must send an original of their comments to: Federal Energy Regulatory Commission, Secretary of the Commission, 888 First Street NE., Washington, DC 20426.

144. All comments will be placed in the Commission's public files and may be viewed, printed, or downloaded remotely as described in the Document Availability section below. Commenters on this proposal are not required to serve copies of their comments on other commenters.

VII. Document Availability

145. In addition to publishing the full text of this document in the **Federal Register**, the Commission provides all interested persons an opportunity to view and/or print the contents of this document via the Internet through the Commission's Home Page (*http://www.ferc.gov*) and in the Commission's Public Reference Room during normal business hours (8:30 a.m. to 5 p.m. Eastern time) at 888 First Street NE., Room 2A, Washington, DC 20426.

146. From the Commission's Home Page on the Internet, this information is available on eLibrary. The full text of this document is available on eLibrary in PDF and Microsoft Word format for viewing, printing, and/or downloading. To access this document in eLibrary, type the docket number excluding the last three digits of this document in the docket number field.

147. User assistance is available for eLibrary and the Commission's Web site during normal business hours from the Commission's Online Support at 202–502–6652 (toll free at 1–866–208–3676) or email at *ferconlinesupport@ferc.gov,* or the Public Reference Room at (202) 502–8371, TTY (202) 502–8659. Email the Public Reference Room at *public.referenceroom@ferc.gov.*

List of Subjects in 18 CFR Part 40

Electric power; Electric utilities; Reporting and recordkeeping requirements.

By direction of the Commission. Commissioner Clark voting present.

Nathaniel J. Davis, Sr.,

Deputy Secretary.

[FR Doc. 2012–15944 Filed 7–3–12; 8:45 am]

BILLING CODE 6717–01–P

FEDERAL REGISTER

Vol. 77 Thursday,

No. 129 July 5, 2012

Part IV

The President

Proclamation 8840—To Modify Duty-Free Treatment Under the Generalized System of Preferences, and for Other Purposes

Federal Register
Vol. 77, No. 129
Thursday, July 5, 2012

Presidential Documents

Title 3—

The President

Proclamation 8840 of June 29, 2012

To Modify Duty-Free Treatment Under the Generalized System of Preferences, and for Other Purposes

By the President of the United States of America

A Proclamation

1. Pursuant to sections 501 and 503(a)(1)(B) of the Trade Act of 1974, as amended (the ''1974 Act'') (19 U.S.C. 2461 and 2463(a)(1)(B)), the President may designate certain articles as eligible for preferential tariff treatment under the Generalized System of Preferences (GSP) when imported from a least-developed beneficiary developing country.

2. Pursuant to sections 501 and 503(a)(1)(B) of the 1974 Act, and after receiving advice from the United States International Trade Commission (the ''Commission'') in accordance with section 503(e) of the 1974 Act (19 U.S.C. 2463(e)), I have determined to designate certain articles as eligible articles when imported from a least-developed beneficiary developing country.

3. Section 503(c)(2)(C) of the 1974 Act (19 U.S.C. 2463(c)(2)(C)) provides that a country that is no longer treated as a beneficiary developing country with respect to an eligible article may be redesignated as a beneficiary developing country with respect to such article, subject to the considerations set forth in sections 501 and 502 of the 1974 Act (19 U.S.C. 2462), if imports of such article from such country did not exceed the competitive need limitations in section 503(c)(2)(A) of the 1974 Act (19 U.S.C. 2463(c)(2)(A)) during the preceding calendar year.

4. Pursuant to section 503(c)(2)(C) of the 1974 Act, and having taken into account the considerations set forth in sections 501 and 502 of the 1974 Act, I have determined to redesignate certain countries as beneficiary developing countries with respect to certain eligible articles that previously had been imported in quantities exceeding the competitive need limitations of section 503(c)(2)(A) of the 1974 Act.

5. Section 503(c)(2)(A) of the 1974 Act provides that beneficiary developing countries, except those designated as least-developed beneficiary developing countries or beneficiary sub-Saharan African countries as provided in section 503(c)(2)(D) of the 1974 Act (19 U.S.C. 2463(c)(2)(D)), are subject to competitive need limitations on the preferential treatment afforded under the GSP to eligible articles.

6. Pursuant to section 503(c)(2)(A) of the 1974 Act, I have determined that in 2011 certain beneficiary developing countries exported eligible articles in quantities exceeding the applicable competitive need limitations, and I therefore terminate the duty-free treatment for such articles from such beneficiary developing countries.

7. Section 503(d)(4)(B)(ii) of the 1974 Act (19 U.S.C. 2463(d)(4)(B)(ii)) provides that the President should revoke any waiver of the application of the competitive need limitations that has been in effect with respect to an article for 5 years or more if the beneficiary developing country has exported to the United States during the preceding calendar an amount that exceeds the quantity set forth in section 503(d)(4)(B)(ii)(I) or section 503(d)(4)(B)(ii)(II) of the 1974 Act (19 U.S.C. 2463(d)(4)(B)(ii)(I) and 19 U.S.C. 2463(d)(4)(B)(ii)(II)).

8. Pursuant to section 503(d)(4)(B)(ii) of the 1974 Act, I have determined that in 2011 certain beneficiary developing countries exported eligible articles for which a waiver has been in effect for 5 years or more in quantities exceeding the applicable limitation set forth in section 503(d)(4)(B)(ii)(I) or section 503(d)(4)(B)(ii)(II) of the 1974 Act, and I therefore revoke said waivers.

9. Section 503(c)(2)(F)(i) of the 1974 Act (19 U.S.C. 2463(c)(2)(F)(i)) provides that the President may disregard the competitive need limitation provided in section 503(c)(2)(A)(i)(II) of the 1974 Act (19 U.S.C. 2463(c)(2)(A)(i)(II)) with respect to any eligible article from any beneficiary developing country, if the aggregate appraised value of the imports of such article into the United States during the preceding calendar year does not exceed an amount set forth in section 503(c)(2)(F)(ii) of the 1974 Act (19 U.S.C. 2463(c)(2)(F)(ii)).

10. Pursuant to section 503(c)(2)(F)(i) of the 1974 Act, I have determined that the competitive need limitation provided in section 503(c)(2)(A)(i)(II) of the 1974 Act should be disregarded with respect to certain eligible articles from certain beneficiary developing countries.

11. Section 503(d)(1) of the 1974 Act (19 U.S.C. 2463(d)(1)) provides that the President may waive the application of the competitive need limitations in section 503(c)(2) of the 1974 Act with respect to any eligible article from any beneficiary developing country if certain conditions are met.

12. Pursuant to section 503(d)(1) of the 1974 Act, I have received the advice of the Commission on whether any industry in the United States is likely to be adversely affected by waivers of the competitive need limitations provided in section 503(c)(2), and I have determined, based on that advice and on the considerations described in sections 501 and 502(c) of the 1974 Act (19 U.S.C. 2462(c)) and after giving great weight to the considerations in section 503(d)(2) of the 1974 Act (19 U.S.C. 2463(d)(2)), that such waivers are in the national economic interest of the United States. Accordingly, I have determined that the competitive need limitations of section 503(c)(2) of the 1974 Act should be waived with respect to certain eligible articles from certain beneficiary developing countries.

13. Section 502(e) of the 1974 Act (19 U.S.C. 2462(e)) provides that the President shall terminate the designation of a country as a beneficiary developing country if the President determines that such country has become a ''high income'' country as defined by the official statistics of the International Bank for Reconstruction and Development. Termination is effective on January 1 of the second year following the year in which such determination is made.

14. Pursuant to section 502(e) of the 1974 Act, I have determined that Gibraltar has become a ''high income'' country, and I am terminating the designation of that country as a beneficiary developing country for purposes of the GSP, effective January 1, 2014, and I will so notify the Congress.

15. Pursuant to section 502(e) of the 1974 Act, I have also determined that the Turks and Caicos Islands has become a ''high income'' country, and I am terminating the designation of that country as a beneficiary developing country for purposes of the GSP, effective January 1, 2014, and I will so notify the Congress.

16. Pursuant to section 502(a)(2) of the 1974 Act (19 U.S.C. 2462(a)(2)), the President is authorized to designate any beneficiary developing country as a least-developed beneficiary developing country for purposes of the GSP. Section 502(f)(1)(B) of the 1974 Act (19 U.S.C. 2462(f)(1)(B)) requires the President to notify the Congress at least 60 days before designating any country as a least-developed beneficiary developing country.

17. Pursuant to section 502(a)(2) of the 1974 Act, having considered the factors set forth in section 501 and section 502(c) of the 1974 Act (19 U.S.C. 2462(c)), I have determined that the Republic of Senegal (Senegal) should be designated as a least-developed beneficiary developing country for purposes of the GSP, and I will so notify the Congress.

18. Section 604 of the 1974 Act (19 U.S.C. 2483) authorizes the President to embody in the Harmonized Tariff Schedule of the United States (HTS) the substance of the relevant provisions of that Act, and of other Acts affecting import treatment, and actions thereunder, including removal, modification, continuance, or imposition of any rate of duty or other import restriction.

19. The short form name of East Timor has been changed to Timor-Leste, and I have determined that general note 4 to the HTS should be modified to reflect this change.

20. Presidential Proclamation 7011 of June 30, 1997, implemented the World Trade Organization Ministerial Declaration on Trade in Information Technology Products (the ''ITA'') for the United States. Products included in Attachment B to the ITA are entitled to duty-free treatment wherever classified. In order to maintain the intended tariff treatment for certain products covered in Attachment B, I have determined that technical corrections to the HTS are necessary.

NOW, THEREFORE, I, BARACK OBAMA, President of the United States of America, by virtue of the authority vested in me by the Constitution and the laws of the United States of America, including but not limited to title V and section 604 of the 1974 Act, do proclaim that:

(1) In order to designate certain articles as eligible articles only when imported from a least-developed beneficiary developing country for purposes of the GSP, the Rates of Duty 1–Special subcolumn for the corresponding HTS subheadings is modified as set forth in section A of Annex I to this proclamation.

(2) In order to redesignate certain articles as eligible articles for purposes of the GSP, the Rates of Duty 1–Special subcolumn for the corresponding HTS subheadings and general note 4(d) to the HTS are modified as set forth in section B of Annex I to this proclamation.

(3) In order to provide that one or more countries should no longer be treated as beneficiary developing countries with respect to one or more eligible articles for purposes of the GSP, the Rates of Duty 1–Special subcolumn for the corresponding HTS subheadings and general note 4(d) to the HTS is modified as set forth in section C of Annex I to this proclamation.

(4) In order to reflect the change in the name of East Timor, general notes 4(a) and 4(b)(i) to the HTS are modified as provided in section D of Annex I to this proclamation.

(5) The modifications to the HTS set forth in Annex I to this proclamation shall be effective with respect to articles entered, or withdrawn from warehouse for consumption, on or after the dates set forth in the relevant sections of Annex I.

(6) The competitive need limitation provided in section 503(c)(2)(A)(i)(II) of the 1974 Act is disregarded with respect to the eligible articles in the HTS subheadings and to the beneficiary developing countries listed in Annex II to this proclamation.

(7) A waiver of the application of section 503(c)(2) of the 1974 Act shall apply to the articles in the HTS subheadings and to the beneficiary developing countries set forth in Annex III to this proclamation.

(8) The designation of Gibraltar as a beneficiary developing country for purposes of the GSP is terminated, effective on January 1, 2014.

(9) In order to reflect this termination in the HTS, general note 4(a) to the HTS is modified by deleting ''Gibraltar'' from the list of non-independent countries and territories, effective with respect to articles entered, or withdrawn from warehouse for consumption, on or after January 1, 2014.

(10) The designation of the Turks and Caicos Islands as a beneficiary developing country for purposes of the GSP is terminated, effective on January 1, 2014.

(11) In order to reflect this termination in the HTS, general note 4(a) to the HTS is modified by deleting ''Turks and Caicos Islands'' from the list of non-independent countries and territories, effective with respect to articles entered, or withdrawn from warehouse for consumption, on or after January 1, 2014.

(12) Senegal is designated as a least-developed beneficiary developing country for purposes of the GSP, effective 60 days after the date this proclamation is published in the **Federal Register**.

(13) In order to reflect this designation in the HTS, general note 4(b)(i) is modified by adding in alphabetical order ''Senegal,'' effective with respect to articles entered, or withdrawn from warehouse for consumption, on or after the date that is 60 days after the date this proclamation is published in the **Federal Register**.

(14) In order to provide the intended tariff treatment to certain products covered by the ITA, the HTS is modified as set forth in Annex IV to this proclamation.

(15) The modifications to the HTS set forth in Annex IV to this proclamation shall be effective with respect to articles entered, or withdrawn from warehouse for consumption, on or after the date set forth in Annex IV.

(16) Any provisions of previous proclamations and Executive Orders that are inconsistent with the actions taken in this proclamation are superseded to the extent of such inconsistency.

IN WITNESS WHEREOF, I have hereunto set my hand this twenty-ninth day of June, in the year of our Lord two thousand twelve, and of the Independence of the United States of America the two hundred and thirty-sixth.

Billing code 3295–F2–P

ANNEX I

MODIFICATIONS TO THE HARMONIZED TARIFF SCHEDULE OF THE UNITED STATES

Section A. Effective with respect to articles entered, or withdrawn from warehouse for consumption, on or after July 1, 2012, the Harmonized Tariff Schedule of the United States (HTS) is modified as provided in this section. For each of the following subheadings, the Rates of Duty 1-Special subcolumn is modified by inserting the symbol "A+":

5201.00.22
5201.00.24
5201.00.34
5202.91.00
5203.00.05
5203.00.10
5203.00.50

Section B. Effective with respect to articles entered, or withdrawn from warehouse for consumption, on or after July 1, 2012:

(1) for each of the following subheadings, the Rates of Duty 1-Special subcolumn is modified by deleting the symbol "A*" and inserting the symbol "A" in lieu thereof:

0802.70.20

(2) general note 4(d) to the HTS is modified by deleting the following subheading and the country set out opposite such subheading number:

0802.70.20 Côte d'Ivoire

Section C. Effective with respect to articles entered, or withdrawn from warehouse consumption, on or after July 1, 2012:

(1) for each of the following subheadings, the Rates of Duty 1-Special subcolumn is modified by deleting the symbol "A" and inserting the symbol "A*" in lieu thereof:

2207.10.30
2840.19.00
2909.50.40
2922.41.00
4107.19.50
5703.10.20
7601.10.30

(2) general note 4(d) to the HTS is modified by:

(A) adding, in numerical sequence, the following subheading numbers and the countries set out opposite such subheading numbers:

2207.10.30	Brazil
2840.19.00	Turkey
2909.50.40	Indonesia
2922.41.00	Brazil
3923.21.50	Thailand
4107.19.50	Brazil
5703.10.20	India
7601.10.30	Venezuela

(B) adding, in alphabetical order, the following countries opposite the following subheading numbers:

4011.20.10	Thailand
7113.11.50	Thailand
7606.12.30	Indonesia
8708.30.50	India

Section D. Effective with respect to articles entered, or withdrawn from warehouse for consumption, on or after July 1, 2012:

(1) general note 4(a) to the HTS is modified by deleting "East Timor" from the list entitled "Independent Countries" and inserting "Timor-Leste" in lieu thereof; and

(2) general note 4(b)(i) to the HTS is modified by deleting "East Timor" and inserting in alphabetical order "Timor-Leste" in lieu thereof.

ANNEX II

HTS Subheadings and Countries for Which the Competitive Need Limitation Provided in Section 503(c)(2)(A)(i)(II) is Disregarded

0304.99.91	Indonesia
0305.63.20	Thailand
0410.00.00	Indonesia
0501.00.00	India
0710.80.50	Turkey
0711.40.00	India
0712.90.70	Egypt
0713.90.61	Bolivia
0713.90.81	Bolivia
0802.52.00	Turkey
0802.90.20	Turkey
0810.60.00	Thailand
0813.40.10	Thailand
1102.90.30	India
1103.19.14	Pakistan
1702.60.22	Thailand
1904.30.00	Turkey
2001.90.45	India
2005.80.00	Thailand
2005.91.97	India
2006.00.70	Thailand
2008.99.50	Thailand
2103.90.72	India
2106.90.06	India
2106.90.42	Thailand
2308.00.95	Egypt
2516.12.00	India
2813.90.50	India
2827.39.10	Russia
2827.39.25	India
2827.39.45	India
2830.90.20	Russia

2831.90.00	India
2833.29.40	Turkey
2834.10.10	India
2840.11.00	Turkey
2841.61.00	India
2844.10.10	Russia
2844.30.10	India
2903.89.11	Russia
2904.90.15	India
2905.19.10	Brazil
2907.29.25	India
2908.99.20	India
2909.11.00	India
2909.19.14	Russia
2912.49.10	India
2913.00.50	India
2914.40.10	Brazil
2914.40.20	India
2915.50.20	India
2916.34.15	India
2921.42.15	India
2921.42.21	India
2924.21.04	Brazil
2924.29.43	India
2927.00.30	India
2932.99.08	India
2933.49.08	India
2933.99.06	India
2934.99.08	India
3824.90.31	Brazil
3824.90.32	Brazil
4101.20.70	Thailand
4101.50.40	Brazil
4101.50.50	Brazil
4101.50.70	Brazil
4101.90.40	Pakistan
4104.11.30	India
4106.22.00	Pakistan
4107.11.60	Turkey
4107.12.40	India
4107.19.40	India
4107.19.60	Brazil
4107.91.40	India
4107.92.40	India
4107.99.40	Pakistan
4114.10.00	Turkey
4206.00.13	Brazil
4601.22.40	Indonesia
4601.22.90	Indonesia
4602.19.05	Indonesia
5208.31.20	Pakistan
5208.51.20	India
5209.41.30	India
5311.00.60	India
5607.90.35	Philippines
6304.99.25	India
6908.10.20	Indonesia
6913.10.20	Thailand
7113.20.25	India
7325.91.00	India
8112.19.00	Kazakhstan
8112.59.00	Russia
8406.82.10	Brazil
9303.30.40	Russia
9614.00.26	Turkey

ANNEX III

HTS Subheadings and Countries Granted a Waiver of the Application of Section 503(c)(2)(A) of the 1974 Act

2921.19.60	Philippines
3307.41.00	India
4015.19.10	Thailand
8415.90.80	Thailand

ANNEX IV

TO MODIFY THE HARMONIZED TARIFF SCHEDULE OF THE UNITED STATES WITH RESPECT TO IMPORTS OF CERTAIN FLAT PANEL DISPLAY DEVICES

Effective with respect to goods entered, or withdrawn from warehouse for consumption, on or after July 1, 2012, chapter 85 of the Harmonized Tariff Schedule of the United States (HTS) is modified as provided herein. The following supersedes matter now in the HTS. The subheadings and superior text established herein are set forth in columnar format, with the material in such columns inserted in the columns of the HTS designated as "Heading/Subheading", "Article Description", "Rates of Duty 1 General", "Rates of Duty 1 Special", and "Rates of Duty 2", respectively.

1. The following new additional U.S. note is inserted in numerical sequence in such chapter:

"13. For the purposes of subheadings 8528.59.21 and 8528.59.31, the term "flat panel display devices designed for use with an automatic data processing machine" refers to monitors that have as a purpose operation with an automatic data processing (ADP) machine of heading 8471, such monitors being able to display signals or data from an ADP machine in a form that meets the requirements of the user.

Such monitors need not be shown to be solely or principally for use with an ADP machine and may also be capable of displaying signals or data from devices other than ADP machines."

2. Subheading 8528.59.20 is deleted and the following new subheadings and superior text are inserted in lieu thereof:

	[Monitors...:]			
	[Other...:]			
	[Other:]			
	[Color:]			
	[With...:]			
	[Incorporating...:]			
	"Other:			
8528.59.21	Flat panel display devices designed for use with an automatic data processing machine, as defined in additional U.S. note 13 to chapter 85.....	Free		25%
8528.59.23	Other.....	3.9%	Free (A,AU,BH,CA,CL, CO,E,IL,J,JO,KR,MA, MX,OM,P,PE,SG)	25%"

3. Subheading 8528.59.30 is deleted and the following new subheadings and superior text are inserted in lieu thereof:

	[Monitors...:]			
	[Other...:]			
	[Other:]			
	[Color:]			
	[With...::]			
	[Other:]			
	"Other:			
8528.59.31	Flat panel display devices designed for use with an automatic data processing machine, as defined in additional U.S. note 13 to chapter 85.....	Free		35%
8528.59.33	Other.....	5%	Free (A+,AU,B,BH,CA,CL, CO,E,IL,J,JO,KR,MA, MX,OM,P,PE,SG)	35%"

Conforming change: Heading 9902.23.52 is modified by deleting "8528.59.30" and by inserting in lieu thereof "8528.59.33".

[FR Doc. 2012–16632
Filed 7–3–12; 11:15 am]
Billing code 7020–02–C

Reader Aids

Federal Register

Vol. 77, No. 129

Thursday, July 5, 2012

CUSTOMER SERVICE AND INFORMATION

Federal Register/Code of Federal Regulations	
General Information, indexes and other finding aids	**202–741–6000**
Laws	**741–6000**
Presidential Documents	
Executive orders and proclamations	**741–6000**
The United States Government Manual	**741–6000**
Other Services	
Electronic and on-line services (voice)	**741–6020**
Privacy Act Compilation	**741–6064**
Public Laws Update Service (numbers, dates, etc.)	**741–6043**
TTY for the deaf-and-hard-of-hearing	**741–6086**

ELECTRONIC RESEARCH

World Wide Web

Full text of the daily Federal Register, CFR and other publications is located at: **www.fdsys.gov.**

Federal Register information and research tools, including Public Inspection List, indexes, and links to GPO Access are located at: **www.ofr.gov.**

E-mail

FEDREGTOC-L (Federal Register Table of Contents LISTSERV) is an open e-mail service that provides subscribers with a digital form of the Federal Register Table of Contents. The digital form of the Federal Register Table of Contents includes HTML and PDF links to the full text of each document.

To join or leave, go to **http://listserv.access.gpo.gov** and select *Online mailing list archives, FEDREGTOC-L, Join or leave the list (or change settings);* then follow the instructions.

PENS (Public Law Electronic Notification Service) is an e-mail service that notifies subscribers of recently enacted laws.

To subscribe, go to **http://listserv.gsa.gov/archives/publaws-l.html** and select *Join or leave the list (or change settings);* then follow the instructions.

FEDREGTOC-L and **PENS** are mailing lists only. We cannot respond to specific inquiries.

Reference questions. Send questions and comments about the Federal Register system to: **fedreg.info@nara.gov**

The Federal Register staff cannot interpret specific documents or regulations.

Reminders. Effective January 1, 2009, the Reminders, including Rules Going Into Effect and Comments Due Next Week, no longer appear in the Reader Aids section of the Federal Register. This information can be found online at **http://www.regulations.gov.**

CFR Checklist. Effective January 1, 2009, the CFR Checklist no longer appears in the Federal Register. This information can be found online at **http://bookstore.gpo.gov/.**

FEDERAL REGISTER PAGES AND DATE, JULY

39143–39384 2
39385–39616 3
39617–39894 5

CFR PARTS AFFECTED DURING JULY

At the end of each month the Office of the Federal Register publishes separately a List of CFR Sections Affected (LSA), which lists parts and sections affected by documents published since the revision date of each title.

3 CFR

Proclamations:
8840 39885

Administrative Orders:
Presidential Determinations:
No. 2012–10 of June 25, 2012 39615

5 CFR

2634 39143

7 CFR

915 39150

Proposed Rules:
925 39184

10 CFR

2 39385
171 39385

Proposed Rules:
2 39442
171 39442

12 CFR

614 39387
1070 39617

14 CFR

1 39388
33 39623
39 ..... 39153, 39156, 39157, 39159, 39624
67 39389

Proposed Rules:
39 ..... 39186, 39188, 39444, 39446
71 ..... 39651, 39652, 39653
120 39194
121 39654
382 39800

15 CFR

734 39354
738 39354
740 39354
742 39354
743 39354
744 39354
746 39354
748 39354
752 39354
770 39354
772 39354
774 ..... 39162, 39354

16 CFR

Proposed Rules:
23 39201

17 CFR

1 39626
229 39380
240 ..... 39380, 39626

18 CFR

Proposed Rules:
35 39447
40 39858

21 CFR

522 39380
556 39380

22 CFR

126 39392

24 CFR

Proposed Rules:
Ch. IX 39452

26 CFR

Proposed Rules:
1 ..... 39452, 39655

32 CFR

239 39627
706 39629

Proposed Rules:
199 39655

33 CFR

100 ..... 39393, 39395, 39398, 39630, 39632, 39633
147 39164
165 ..... 39169, 39170, 39172, 39174, 39398, 39402, 39404, 39406, 39408, 39411, 39413, 39413, 39418, 39420, 39422, 39633, 39638

Proposed Rules:
100 39453
165 39453

36 CFR

294 39576

Proposed Rules:
1195 39656

40 CFR

52 ..... 39177, 39180, 39181, 39425
141 39182
142 39182
171 39640

Proposed Rules:
50 39205
51 39205
52 ..... 39205, 39456, 39458, 39657, 39659
53 39205
58 39205

44 CFR

64 39642

47 CFR

54 39435
73 39439

Proposed Rules:

15 39206

49 CFR

Proposed Rules:

171 39662
173 39662
178 39662
571 39206

50 CFR

622 39647
635 39648
679 ..... 39183, 39440, 39441, 39649

Proposed Rules:

17 ..... 39666, 39670
600 39459
622 39460

LIST OF PUBLIC LAWS

This is a continuing list of public bills from the current session of Congress which have become Federal laws. It may be used in conjunction with "P L U S" (Public Laws Update Service) on 202–741–6043. This list is also available online at *http://www.archives.gov/federal-register/laws*.

The text of laws is not published in the **Federal Register** but may be ordered in "slip law" (individual pamphlet) form from the Superintendent of Documents, U.S. Government Printing Office, Washington, DC 20402 (phone, 202–512–1808). The text will also be made available on the Internet from GPO's Federal Digital System (FDsys) at *http://www.gpo.gov/fdsys*. Some laws may not yet be available.

H.R. 6064/P.L. 112–140
Temporary Surface Transportation Extension Act of 2012 (June 29, 2012; 126 Stat. 391)
Last List June 29, 2012

Public Laws Electronic Notification Service (PENS)

PENS is a free electronic mail notification service of newly enacted public laws. To subscribe, go to *http://listserv.gsa.gov/archives/publaws-l.html*

Note: This service is strictly for E-mail notification of new laws. The text of laws is not available through this service. **PENS** cannot respond to specific inquiries sent to this address.