AUTHENTICATED
U.S. GOVERNMENT
INFORMATION
GPO

FEDERAL REGISTER

Vol. 77 Thursday,
No. 120 June 21, 2012

Pages 37259–37548

OFFICE OF THE FEDERAL REGISTER

The **FEDERAL REGISTER** (ISSN 0097–6326) is published daily, Monday through Friday, except official holidays, by the Office of the Federal Register, National Archives and Records Administration, Washington, DC 20408, under the Federal Register Act (44 U.S.C. Ch. 15) and the regulations of the Administrative Committee of the Federal Register (1 CFR Ch. I). The Superintendent of Documents, U.S. Government Printing Office, Washington, DC 20402 is the exclusive distributor of the official edition. Periodicals postage is paid at Washington, DC.

The **FEDERAL REGISTER** provides a uniform system for making available to the public regulations and legal notices issued by Federal agencies. These include Presidential proclamations and Executive Orders, Federal agency documents having general applicability and legal effect, documents required to be published by act of Congress, and other Federal agency documents of public interest.

Documents are on file for public inspection in the Office of the Federal Register the day before they are published, unless the issuing agency requests earlier filing. For a list of documents currently on file for public inspection, see *www.ofr.gov.*

The seal of the National Archives and Records Administration authenticates the Federal Register as the official serial publication established under the Federal Register Act. Under 44 U.S.C. 1507, the contents of the **Federal Register** shall be judicially noticed.

The **Federal Register** is published in paper and on 24x microfiche. It is also available online at no charge at *www.fdsys.gov*, a service of the U.S. Government Printing Office.

The online edition of the **Federal Register** is issued under the authority of the Administrative Committee of the Federal Register as the official legal equivalent of the paper and microfiche editions (44 U.S.C. 4101 and 1 CFR 5.10). It is updated by 6:00 a.m. each day the **Federal Register** is published and includes both text and graphics from Volume 59, 1 (January 2, 1994) forward. For more information, contact the GPO Customer Contact Center, U.S. Government Printing Office. Phone 202-512-1800 or 866-512-1800 (toll free). E-mail, *gpo@custhelp.com.*

The annual subscription price for the **Federal Register** paper edition is $749 plus postage, or $808, plus postage, for a combined **Federal Register, Federal Register** Index and List of CFR Sections Affected (LSA) subscription; the microfiche edition of the **Federal Register** including the **Federal Register** Index and LSA is $165, plus postage. Six month subscriptions are available for one-half the annual rate. The prevailing postal rates will be applied to orders according to the delivery method requested. The price of a single copy of the daily **Federal Register,** including postage, is based on the number of pages: $11 for an issue containing less than 200 pages; $22 for an issue containing 200 to 400 pages; and $33 for an issue containing more than 400 pages. Single issues of the microfiche edition may be purchased for $3 per copy, including postage. Remit check or money order, made payable to the Superintendent of Documents, or charge to your GPO Deposit Account, VISA, MasterCard, American Express, or Discover. Mail to: U.S. Government Printing Office—New Orders, P.O. Box 979050, St. Louis, MO 63197-9000; or call toll free 1-866-512-1800, DC area 202-512-1800; or go to the U.S. Government Online Bookstore site, see *bookstore.gpo.gov.*

There are no restrictions on the republication of material appearing in the **Federal Register.**

How To Cite This Publication: Use the volume number and the page number. Example: 77 FR 12345.

Postmaster: Send address changes to the Superintendent of Documents, Federal Register, U.S. Government Printing Office, Washington, DC 20402, along with the entire mailing label from the last issue received.

SUBSCRIPTIONS AND COPIES

PUBLIC

Subscriptions:

Paper or fiche	**202–512–1800**
Assistance with public subscriptions	**202–512–1806**

General online information **202–512–1530; 1–888–293–6498**

Single copies/back copies:

Paper or fiche	**202–512–1800**
Assistance with public single copies	**1–866–512–1800 (Toll-Free)**

FEDERAL AGENCIES

Subscriptions:

Paper or fiche	**202–741–6005**
Assistance with Federal agency subscriptions	**202–741–6005**

FEDERAL REGISTER WORKSHOP

THE FEDERAL REGISTER: WHAT IT IS AND HOW TO USE IT

FOR: Any person who uses the Federal Register and Code of Federal Regulations.

WHO: Sponsored by the Office of the Federal Register.

WHAT: Free public briefings (approximately 3 hours) to present:

1. The regulatory process, with a focus on the Federal Register system and the public's role in the development of regulations.
2. The relationship between the Federal Register and Code of Federal Regulations.
3. The important elements of typical Federal Register documents.
4. An introduction to the finding aids of the FR/CFR system.

WHY: To provide the public with access to information necessary to research Federal agency regulations which directly affect them. There will be no discussion of specific agency regulations.

WHEN: Tuesday, July 10, 2012
9 a.m.–12:30 p.m.

WHERE: Office of the Federal Register
Conference Room, Suite 700
800 North Capitol Street, NW.
Washington, DC 20002

RESERVATIONS: (202) 741–6008

Printed on recycled paper.

Contents

Federal Register

Vol. 77, No. 120

Thursday, June 21, 2012

Agricultural Marketing Service
NOTICES
Requests for Nominations:
National Organic Standards Board, 37374

Agriculture Department
See Agricultural Marketing Service
See Commodity Credit Corporation

Alcohol and Tobacco Tax and Trade Bureau
RULES
Qualifications of Manufacturers and Importers of Processed Tobacco:
Permit Requirements and the Expanded Definition of Roll-Your-Own Tobacco, 37287–37305

Bureau of Safety and Environmental Enforcement
NOTICES
Agency Information Collection Activities; Proposals, Submissions, and Approvals:
Global Positioning System for MODUs, 37430–37432

Centers for Disease Control and Prevention
NOTICES
Meetings:
Board of Scientific Counselors, Office of Public Health Preparedness and Response, 37410–37411

Children and Families Administration
NOTICES
Agency Information Collection Activities; Proposals, Submissions, and Approvals:
April 2014 Current Population Survey Supplement on Child Support, 37412
Personal Responsibility Education Program Multi-Component Evaluation, etc., 37411–37412

Civil Rights Commission
NOTICES
Meetings:
Montana Advisory Committee, 37376

Coast Guard
RULES
Drawbridge Operation Regulations:
Reynolds Channel, Nassau, NY, 37316
Drawbridge Operations:
Lake Washington, Seattle, WA, 37317
Merrimack River, Haverhill and West Newbury, MA, 37317–37318
Trent River, New Bern, NC, 37316–37317
Eighth Coast Guard District Annual Safety Zones:
Fourth of July Celebration; Santa Rosa Sound; Fort Walton Beach, FL, 37318
Sound of Independence; Santa Rosa Sound; Fort Walton Beach, FL, 37318–37319
Navigation and Navigable Waters:
Technical, Organizational, and Conforming Amendments, 37305–37316
Safety Zones:
Barrel Recovery, Lake Superior; Duluth, MN, 37321–37323
Fifth Coast Guard District Fireworks Display Pasquotank River; Elizabeth City, NC, 37319–37321
Grand Hotel 125th Anniversary Fireworks Celebration, Mackinaw Island, MI, 37326–37328
Major Motion Picture Filming, Cape Fear River; Wilmington, NC, 37324–37326
PROPOSED RULES
Safety Zones:
Fireworks Display, Pamlico River; Washington, NC, 37356–37359

Commerce Department
See Economic Analysis Bureau
See Industry and Security Bureau
See International Trade Administration
See National Oceanic and Atmospheric Administration

Commodity Credit Corporation
NOTICES
Agency Information Collection Activities; Proposals, Submissions, and Approvals, 37374–37376

Commodity Futures Trading Commission
NOTICES
Charter Renewals:
Technology Advisory Committee, 37389–37390

Community Living Administration
NOTICES
Delegations of Authority, 37412–37413

Comptroller of the Currency
RULES
Lending Limits, 37265–37283
NOTICES
Agency Information Collection Activities; Proposals, Submissions, and Approvals, 37475–37476

Corporation for National and Community Service
NOTICES
Training and Technical Assistance and Disability Inclusion Programming, 37390

Department of Transportation
See Pipeline and Hazardous Materials Safety Administration

Economic Analysis Bureau
NOTICES
Agency Information Collection Activities; Proposals, Submissions, and Approvals:
Foreign Ocean Carriers' Expenses in the United States, 37376–37377

Energy Department
See Federal Energy Regulatory Commission
NOTICES
Meetings:
Environmental Management Site-Specific Advisory Board, Portsmouth, 37390

Environmental Protection Agency
RULES
Approvals and Promulgations of Air Quality Implementation Plans:
Indiana; Central Indiana, Indianapolis, Ozone Maintenance Plan Revision to Approved Motor Vehicle Emissions Budgets, 37328–37330
PROPOSED RULES
National Emission Standards for Hazardous Air Pollutants for Reciprocating Internal Combustion Engines:
New Source Performance Standards for Stationary Internal Combustion Engines, 37361–37362
Revisions to California State Implementation Plan:
South Coast Air Quality Management District; San Joaquin Valley Unified Air Pollution Control District, 37359–37361
NOTICES
Proposed Settlement Agreements, 37397–37399

Executive Office of the President
See Presidential Documents

Farm Credit Administration
RULES
General Provisions; Operating and Strategic Business Planning; Effective Date, 37283

Farm Credit System Insurance Corporation
NOTICES
Policy Statements:
Assistance to Troubled Farm Credit System Institutions, 37399–37401

Federal Aviation Administration
RULES
Airworthiness Directives:
Turbomeca S.A. Turboshaft Engines, 37283–37284
PROPOSED RULES
Airworthiness Directives:
Airbus Airplanes, 37344–37346
BAE SYSTEMS (OPERATIONS) LIMITED Airplanes, 37340–37342
Bombardier, Inc. Airplanes, 37342–37344
Fokker Services B.V. Airplanes, 37337–37340
The Boeing Company Airplanes, 37332–37337
NOTICES
Technical Standard Order:
C65a, Airborne Doppler radar ground speed and/or drift angle measuring equipment (for air carrier aircraft), 37470–37471

Federal Communications Commission
PROPOSED RULES
Implementation of the Middle Class Tax Relief and Job Creation Act of 2012:
Establishment of a Public Safety Answering Point Do-Not-Call Registry, 37362–37367
NOTICES
Data Specifications:
Collecting Study Area Boundaries, 37402–37405

Federal Energy Regulatory Commission
NOTICES
Combined Filings, 37390–37397

Federal Reserve System
NOTICES
Changes in Bank Control:
Acquisitions of Shares of a Bank or Bank Holding Company, 37406
Formations of, Acquisitions by, and Mergers of Bank Holding Companies, 37406
Formations of, Acquisitions by, and Mergers of Savings and Loan Holding Companies, 37406

Federal Retirement Thrift Investment Board
NOTICES
Meetings; Sunshine Act, 37406–37407

Fish and Wildlife Service
PROPOSED RULES
Endangered and Threatened Wildlife and Plants:
90-Day Finding on a Petition to List the Black-capped Petrel as Endangered or Threatened, 37367–37373
NOTICES
Environmental Impact Statements; Availability, etc.:
Final Springfield Plateau Regional Restoration Plan; Finding of No Significant Impact, 37432
Meetings:
Conference of the Parties to the Convention on International Trade in Endangered Species of Wild Fauna and Flora, 37433–37438

Food and Drug Administration
NOTICES
Agency Information Collection Activities; Proposals, Submissions, and Approvals, 37413
Agency Information Collection Activities; Proposals, Submissions, and Approvals:
Data to Support Communications Usability Testing, as Used by the Food and Drug Administration, 37413
Filing Objections and Requests for a Hearing on a Regulation or Order, 37414
Record Retention Requirements for the Soy Protein and Risk of Coronary Heart Disease Health Claim, 37413
Meetings:
Gastrointestinal Drugs Advisory Committee, 37414

Health and Human Services Department
See Centers for Disease Control and Prevention
See Children and Families Administration
See Community Living Administration
See Food and Drug Administration
See Indian Health Service
See National Institutes of Health
See Substance Abuse and Mental Health Services Administration
NOTICES
Agency Information Collection Activities; Proposals, Submissions, and Approvals, 37407
Meetings:
HIT Policy Committee, 37407–37408
HIT Standards Committee, 37408–37409
Secretary's Advisory Committee on Human Research Protections, 37408
Requests for Domains, Instruments, and Measures for Development of Standardized Instruments:
Public Reporting of Enrollee Satisfaction with their Qualified Health Plan and Exchange, 37409–37410

Homeland Security Department
See Coast Guard

Housing and Urban Development Department
NOTICES
Agency Information Collection Activities; Proposals, Submissions, and Approvals:
Accountability in the Provision of HUD Assistance Applicant/Recipient Disclosure/Update Report, 37430

Indian Health Service
See Indian Health Service
NOTICES
Funding Opportunities:
Title V HIV/AIDS; Office of Urban Indian Health Programs, 37415–37420
Reimbursement Rates for Calendar Year 2012; Correction, 37421

Industry and Security Bureau
PROPOSED RULES
Export Administration Regulations:
Implementation of Export Control Reform; Revisions to License Exceptions after Retrospective Regulatory Review, 37524–37547

Interior Department
See Bureau of Safety and Environmental Enforcement
See Fish and Wildlife Service
See Land Management Bureau
See National Park Service

Internal Revenue Service
PROPOSED RULES
Prohibited Payment Option under Single-Employer Defined Benefit Plan of Plan Sponsor In Bankruptcy, 37349–37352
Reporting and Notice Requirements for Deferred Vested Benefits, 37352–37356

International Trade Administration
NOTICES
Antidumping Duty Orders:
High Pressure Steel Cylinders from the People's Republic of China, 37377–37378
Antidumping Duty Orders; Results, Extensions, Amendments, etc.:
Honey from People's Republic of China, 37378–37384
Countervailing Duty Order:
High Pressure Steel Cylinders from the People's Republic of China, 37384–37385
Export Trade Certificates of Review, 37385–37387

International Trade Commission
NOTICES
Five-year Reviews:
Clad Steel Plate from Japan, 37439

Justice Department
NOTICES
Lodgings of Proposed Consent Decrees:
Clean Water Act, 37439–37440

Labor Department
See Workers Compensation Programs Office
NOTICES
Agency Information Collection Activities; Proposals, Submissions, and Approvals, 37440
Agency Information Collection Activities; Proposals, Submissions, and Approvals:
Diesel-Powered Equipment in Underground Coal Mines, 37441–37442
Mine Mapping and Records of Opening, Closing, and Reopening of Mines, 37440–37441

Land Management Bureau
NOTICES
Proposed Reinstatements of Terminated Oil and Gas Leases:
SDM 96907, South Dakota, 37438

National Archives and Records Administration
NOTICES
Agency Information Collection Activities; Proposals, Submissions, and Approvals, 37442–37443
Records Schedules; Availability and Request for Comments, 37443–37445

National Highway Traffic Safety Administration
PROPOSED RULES
Federal Motor Vehicle Safety Standards:
Glazing Materials, 37478–37521
NOTICES
National Automotive Sampling System, 37471–37472

National Institutes of Health
NOTICES
Meetings:
Center for Scientific Review, 37422–37426
Eunice Kennedy Shriver National Institute of Child Health and Human Development, 37421–37422, 37424
National Center for Advancing Translational Sciences, 37422
National Institute of Allergy and Infectious Diseases, 37422
National Institute of Environmental Health Sciences, 37423–37424
National Institute of General Medical Sciences, 37424–37425
National Institute of Neurological Disorders and Stroke, 37421

National Oceanic and Atmospheric Administration
RULES
Reef Fish Fishery of the Gulf of Mexico:
2012 Commercial Accountability Measure and Closure for Gulf of Mexico Gray Triggerfish, 37330–37331
NOTICES
Agency Information Collection Activities; Proposals, Submissions, and Approvals:
Understanding Recreational Angler Attitudes and Preferences for Saltwater Fishing, 37387
Environmental Impact Statements; Availability, etc.:
New England Fishery Management Council; Northeast Multispecies Fishery, 37387–37389

National Park Service
NOTICES
Environmental Impact Statements; Availability, etc.:
Cuyahoga Valley National Park, OH, 37438–37439

National Science Foundation
NOTICES
Antarctic Conservation Act Permit Modification Requests, 37445–37446
Antarctic Conservation Act Permits, 37446

Nuclear Regulatory Commission
NOTICES
Meetings:
Advisory Committee on the Medical Uses of Isotopes, 37446
Report to Congress on Abnormal Occurrences; Fiscal Year 2011; Dissemination of Information, 37446–37456

Pipeline and Hazardous Materials Safety Administration
NOTICES
Pipeline Safety:
Implementing Incorporation by Reference Requirements of Section 24 of Pipeline Safety, etc.; Public Workshop, 37472–37474

Presidential Documents
PROCLAMATIONS
Special Observances:
Father's Day (Proc. 8839), 37259–37260
ADMINISTRATIVE ORDERS
North Korea; Continuation of National Emergency (Notice of June 18, 2012), 37263–37264
Russian Federation; Continuation of National Emergency (Notice of June 18, 2012), 37261–37262

Securities and Exchange Commission
NOTICES
Self-Regulatory Organizations; Proposed Rule Changes:
Chicago Mercantile Exchange, Inc., 37456–37458
Financial Industry Regulatory Authority, Inc., 37458–37470

State Department
PROPOSED RULES
Export Control Reform Transition Plan, 37346–37349

Substance Abuse and Mental Health Services Administration
NOTICES
Agency Information Collection Activities; Proposals, Submissions, and Approvals, 37426–37430

Transportation Department
See Federal Aviation Administration
See National Highway Traffic Safety Administration
See Pipeline and Hazardous Materials Safety Administration

Treasury Department
See Alcohol and Tobacco Tax and Trade Bureau
See Comptroller of the Currency
See Internal Revenue Service
NOTICES
Agency Information Collection Activities; Proposals, Submissions, and Approvals, 37474–37475

Workers Compensation Programs Office
RULES
Technical Amendments, 37284–37287

Separate Parts In This Issue

Part II
Transportation Department, National Highway Traffic Safety Administration, 37478–37521

Part III
Commerce Department, Industry and Security Bureau, 37524–37547

Reader Aids

Consult the Reader Aids section at the end of this page for phone numbers, online resources, finding aids, reminders, and notice of recently enacted public laws.

To subscribe to the Federal Register Table of Contents LISTSERV electronic mailing list, go to http://listserv.access.gpo.gov and select Online mailing list archives, FEDREGTOC-L, Join or leave the list (or change settings); then follow the instructions.

CFR PARTS AFFECTED IN THIS ISSUE

A cumulative list of the parts affected this month can be found in the Reader Aids section at the end of this issue.

3 CFR

Proclamations:

8839 37259

Administrative Orders:

Notices:

Notice of June 18, 2012 (Russian Federation) 37261

Notice of June 18, 2012 (North Korea) 37263

12 CFR

32 37265
159 37265
160 37265
618 37283

14 CFR

39 37283

Proposed Rules:

39 (5 documents) 37332, 37337, 37340, 37342, 37344

15 CFR

Proposed Rules:

734 37524
736 37524
740 37524
742 37524
743 37524
744 37524
750 37524
758 37524
762 37524
764 37524
774 37524

20 CFR

701 37284
702 37284
703 37284
725 37284
726 37284

22 CFR

Proposed Rules:

120 37346
121 37346
122 37346
123 37346
124 37346
125 37346
126 37346
127 37346
128 37346
129 37346
130 37346

26 CFR

Proposed Rules:

1 (2 documents) 37349, 37352
301 37352

27 CFR

40 37287
41 37287
44 37287
45 37287

33 CFR

1 37305
2 37305
27 37305
40 37305
45 37305
66 37305
80 37305
83 37305
84 37305
85 37305
100 37305
101 37305
110 37305
114 37305
115 37305
116 37305
117 (5 documents) 37305, 37316, 37317
118 37305
136 37305
138 37305
162 37305
165 (7 documents) 37305, 37318, 37319, 37321, 37324, 37326
177 37305

Proposed Rules:

165 37356

40 CFR

52 37328

Proposed Rules:

52 37359
63 37361

47 CFR

Proposed Rules:

1 37362
64 37362

49 CFR

Proposed Rules:

571 37478

50 CFR

622 37330

Proposed Rules:

17 37367

Federal Register
Vol. 77, No. 120
Thursday, June 21, 2012

Presidential Documents

Title 3—

The President

Proclamation 8839 of June 15, 2012

Father's Day, 2012

By the President of the United States of America

A Proclamation

Every day, ordinary Americans make extraordinary contributions to the well-being of our children and the strength of our Nation by answering one of life's greatest callings—parenthood. Morning, noon, and night, they dedicate themselves to their sons and daughters, expressing a love that knows neither beginning nor end through small daily acts. On Father's Day, we honor the men whose compassion and commitment have nourished our spirits and guided us toward brighter horizons.

For many of us, our fathers show us by the example they set the kind of people they want us to become. Whether biological, foster, or adoptive, they teach us through the encouragement they give, the questions they answer, the limits they set, and the strength they show in the face of difficulty and hardship. Our fathers impart lessons and values we will always carry with us. With their presence and their care, they not only fulfill a profound responsibility, but also share a blessing with their children that stands among our truest traditions.

Every father bears a fundamental obligation to do right by their children. Yet, today, too many young Americans grow up without the love and support of their fathers. When the responsibilities of fathers go unmet, our communities suffer. That is why my Administration is working to promote responsible fatherhood by helping dads re-engage with their families and supporting programs that work with fathers. And that is why men across our country are making the decision every single day to step up; to be good fathers; and to serve as mentors, tutors, and foster parents to young people who need the guiding hand of a caring adult.

All of us have a stake in forging stronger bonds between fathers and their children. Today, we celebrate men who have risen to the task, who raised us, and who do that most important work of parenting, day in and day out, with love, humility, and pride.

NOW, THEREFORE, I, BARACK OBAMA, President of the United States of America, in accordance with a joint resolution of the Congress approved April 24, 1972, as amended (36 U.S.C. 109), do hereby proclaim June 17, 2012, as Father's Day. I direct the appropriate officials of the Government to display the flag of the United States on all Government buildings on this day, and I call upon all citizens to observe this day with appropriate programs, ceremonies, and activities.

IN WITNESS WHEREOF, I have hereunto set my hand this fifteenth day of June, in the year of our Lord two thousand twelve, and of the Independence of the United States of America the two hundred and thirty-sixth.

[FR Doc. 2012–15294
Filed 6–20–12; 8:45 am]
Billing code 3295–F2–P

Presidential Documents

Notice of June 18, 2012

Continuation of the National Emergency With Respect to the Risk of Nuclear Proliferation Created by the Accumulation of Weapons-Usable Fissile Material in the Territory of the Russian Federation

On June 21, 2000, the President issued Executive Order 13159 (the ''order'') blocking property and interests in property of the Government of the Russian Federation that are in the United States, that hereafter come within the United States, or that are or hereafter come within the possession or control of United States persons that are directly related to the implementation of the Agreement Between the Government of the United States of America and the Government of the Russian Federation Concerning the Disposition of Highly Enriched Uranium Extracted from Nuclear Weapons, dated February 18, 1993, and related contracts and agreements (collectively, the ''HEU Agreements''). The HEU Agreements allow for the downblending of highly enriched uranium derived from nuclear weapons to low enriched uranium for peaceful commercial purposes. The order invoked the authority, *inter alia,* of the International Emergency Economic Powers Act (50 U.S.C. 1701–1706) and declared a national emergency to deal with the unusual and extraordinary threat to the national security and foreign policy of the United States posed by the risk of nuclear proliferation created by the accumulation of a large volume of weapons-usable fissile material in the territory of the Russian Federation.

The national emergency declared on June 21, 2000, must continue beyond June 21, 2012, to provide continued protection from attachment, judgment, decree, lien, execution, garnishment, or other judicial process for the property and interests in property of the Government of the Russian Federation that are directly related to the implementation of the HEU Agreements and subject to U.S. jurisdiction. Therefore, in accordance with section 202(d) of the National Emergencies Act (50 U.S.C. 1622(d)), I am continuing for 1 year the national emergency with respect to the risk of nuclear proliferation created by the accumulation of weapons-usable fissile material in the territory of the Russian Federation.

This notice shall be published in the **Federal Register** and transmitted to the Congress.

THE WHITE HOUSE,
Washington, June 18, 2012.

[FR Doc. 2012–15272
Filed 6–20–12; 8:45 am]
Billing code 3295–F2–P

Presidential Documents

Notice of June 18, 2012

Continuation of the National Emergency With Respect to North Korea

On June 26, 2008, by Executive Order 13466, the President declared a national emergency pursuant to the International Emergency Economic Powers Act (50 U.S.C. 1701–1706) to deal with the unusual and extraordinary threat to the national security and foreign policy of the United States constituted by the existence and risk of proliferation of weapons-usable fissile material on the Korean Peninsula. The President also found that it was necessary to maintain certain restrictions with respect to North Korea that would otherwise have been lifted pursuant to Proclamation 8271 of June 26, 2008, which terminated the exercise of authorities under the Trading with the Enemy Act (50 U.S.C. App. 1–44) with respect to North Korea.

On August 30, 2010, I signed Executive Order 13551, which expanded the scope of the national emergency declared in Executive Order 13466 to deal with the unusual and extraordinary threat to the national security, foreign policy, and economy of the United States posed by the continued actions and policies of the Government of North Korea, manifested by its unprovoked attack that resulted in the sinking of the Republic of Korea Navy ship *Cheonan* and the deaths of 46 sailors in March 2010; its announced test of a nuclear device and its missile launches in 2009; its actions in violation of United Nations Security Council Resolutions (UNSCRs) 1718 and 1874, including the procurement of luxury goods; and its illicit and deceptive activities in international markets through which it obtains financial and other support, including money laundering, the counterfeiting of goods and currency, bulk cash smuggling, and narcotics trafficking, which destabilize the Korean Peninsula and imperil U.S. Armed Forces, allies, and trading partners in the region.

On April 18, 2011, I signed Executive Order 13570 to take additional steps to address the national emergency declared in Executive Order 13466 and expanded in Executive Order 13551 that will ensure the implementation of the import restrictions contained in UNSCRs 1718 and 1874 and complement the import restrictions provided for in the Arms Export Control Act (22 U.S.C. 2751 *et seq.*).

Because the existence and risk of proliferation of weapons-usable fissile material on the Korean Peninsula and the actions and policies of the Government of North Korea continue to pose an unusual and extraordinary threat to the national security, foreign policy, and economy of the United States, the national emergency declared in Executive Order 13466, expanded in scope in Executive Order 13551, and addressed further in Executive Order 13570, and the measures taken to deal with that national emergency, must continue in effect beyond June 26, 2012. Therefore, in accordance with section 202(d) of the National Emergencies Act (50 U.S.C. 1622(d)), I am continuing for 1 year the national emergency declared in Executive Order 13466.

This notice shall be published in the **Federal Register** and transmitted to the Congress.

THE WHITE HOUSE,
Washington, June 18, 2012.

[FR Doc. 2012–15273
Filed 6–20–12; 8:45 am]
Billing code 3295–F2–P

Rules and Regulations

Federal Register

Vol. 77, No. 120

Thursday, June 21, 2012

This section of the FEDERAL REGISTER contains regulatory documents having general applicability and legal effect, most of which are keyed to and codified in the Code of Federal Regulations, which is published under 50 titles pursuant to 44 U.S.C. 1510.

The Code of Federal Regulations is sold by the Superintendent of Documents. Prices of new books are listed in the first FEDERAL REGISTER issue of each week.

DEPARTMENT OF THE TREASURY

Office of the Comptroller of the Currency

12 CFR Parts 32, 159 and 160

[Docket ID OCC–2012–0007]

RIN 1557–AD59

Lending Limits

AGENCY: Office of the Comptroller of the Currency, Treasury.

ACTION: Interim final rule and request for comments.

SUMMARY: The Office of the Comptroller of the Currency (OCC) is amending its regulation governing lending limits for national banks to consolidate the lending limit rules applicable to national banks and savings associations and remove its separate regulation governing lending limits for savings associations. The OCC also is amending its rules to implement section 610 of the Dodd-Frank Wall Street Reform and Consumer Protection Act, which amends the statutory definition of ''loans and extensions of credit'' to include credit exposures arising from derivative transactions, repurchase agreements, reverse repurchase agreements, securities lending transactions and securities borrowing transactions. Pursuant to the OCC's authority in section 5200(d) of the Revised Statutes, the OCC is amending the lending limit rules to provide a temporary exception for the transactions covered by section 610 until January 1, 2013, in order to allow institutions a sufficient period to make adjustments to assure compliance with the new requirements.

DATES: This interim final rule is effective on July 21, 2012, except that amendatory instruction 3a amending § 32.2 is effective January 1, 2013. Comments must be received by August 6, 2012.

ADDRESSES: Because paper mail in the Washington, DC area and at the OCC is subject to delay, commenters are encouraged to submit comments by the Federal eRulemaking Portal or email, if possible. Please use the title ''Lending Limits'' to facilitate the organization and distribution of the comments. You may submit comments by any of the following methods:

- *Federal eRulemaking Portal—''regulations.gov'':* Go to *http://www.regulations.gov.* Click ''Advanced Search''. Select ''Document Type'' of ''Interim Final Rule'', and in ''By Keyword or ID'' box, enter Docket ID ''OCC–2012–0007'', and click ''Search''. If rules for more than one agency are listed, in the ''Agency'' column, locate the interim final rule for the OCC. Comments can be filtered by Agency using the filtering tools on the left side of the screen. In the ''Actions'' column, click on ''Submit a Comment'' or ''Open Docket Folder'' to submit or view public comments and to view supporting and related materials for this rulemaking action.
- Click on the ''Help'' tab on the Regulations.gov home page to get information on using Regulations.gov, including instructions for submitting or viewing public comments, viewing other supporting and related materials, and viewing the docket after the close of the comment period.
- *Email: regs.comments@occ.treas.gov.*
- *Mail:* Office of the Comptroller of the Currency, 250 E Street SW., Mail Stop 2–3, Washington, DC 20219.
- *Fax:* (202) 874–5274.
- *Hand Delivery/Courier:* 250 E Street SW., Mail Stop 2–3, Washington, DC 20219.

Instructions: You must include ''OCC'' as the agency name and ''Docket ID OCC–2012–0007'' in your comment. In general, OCC will enter all comments received into the docket and publish them on the Regulations.gov Web site without change, including any business or personal information that you provide such as name and address information, email addresses, or phone numbers. Comments received, including attachments and other supporting materials, are part of the public record and subject to public disclosure. Do not enclose any information in your comment or supporting materials that you consider confidential or inappropriate for public disclosure.

You may review comments and other related materials that pertain to this interim final rule by any of the following methods:

- *Viewing Comments Electronically:* Go to *http://www.regulations.gov.* Click ''Advanced Search''. Select ''Document Type'' of ''Public Submission'', and in ''By Keyword or ID'' box enter Docket ID ''OCC–2012–0007'', and click ''Search''. If comments from more than one agency are listed, the ''Agency'' column will indicate which comments were received by the OCC. Comments can be filtered by Agency using the filtering tools on the left side of the screen.
- *Viewing Comments Personally:* You may personally inspect and photocopy comments at the OCC, 250 E Street SW., Washington, DC. For security reasons, the OCC requires that visitors make an appointment to inspect comments. You may do so by calling (202) 874–4700. Upon arrival, visitors will be required to present valid government-issued photo identification and to submit to security screening in order to inspect and photocopy comments.
- *Docket:* You may also view or request available background documents and project summaries using the methods described above.

FOR FURTHER INFORMATION CONTACT: Jonathan Fink, Assistant Director, Bank Activities and Structure Division, (202) 874–5300; Heidi M. Thomas, Special Counsel, Legislative and Regulatory Activities Division, (202) 874–5090; or Kurt Wilhelm, Director for Financial Markets, (202) 874–4479.

SUPPLEMENTARY INFORMATION:

I. Background

Section 5200 of the Revised Statutes, 12 U.S.C. 84, provides that the total loans and extensions of credit by a national bank to a person outstanding at one time shall not exceed 15 percent of the unimpaired capital and unimpaired surplus of the bank if the loan is not fully secured, plus an additional 10 percent of unimpaired capital and unimpaired surplus if the loan is fully secured. Section 5(u)(1) of the Home Owners' Loan Act (HOLA), 12 U.S.C. 1464(u)(1), provides that section 5200 of the Revised Statutes ''shall apply to savings associations in the same manner and to the same extent as it applies to

national banks.'' In addition, section 5(u)(2) of HOLA, 12 U.S.C. 1464(u)(2), includes exceptions to the lending limits for certain loans made by savings associations. These HOLA provisions apply to both Federal and state-chartered savings associations.

OCC regulations at 12 CFR parts 32 and 160.93 implement these statutes for national banks and state and Federal savings associations,[1] respectively. Section 160.93 specifically applies 12 U.S.C. 84 and the lending limit regulations and interpretations promulgated by the OCC for national banks to Federal and state savings associations. Section 160.93 also implements specific statutory lending limit exceptions unique to Federal and state savings associations.

Section 610 of the Dodd-Frank Wall Street Reform and Consumer Protection Act, Public Law 111–203, 124 Stat. 1376 (2010) (Dodd-Frank Act), amends section 5200 of the Revised Statutes [2] to provide that the definition of ''loans and extensions of credit'' includes any credit exposure to a person arising from a derivative transaction, repurchase agreement, reverse repurchase agreement, securities lending transaction, or securities borrowing transaction between a national bank and that person. This amendment is effective July 21, 2012. By virtue of section 5(u)(1) of the HOLA, this new definition of ''loans and extensions of credit'' applies to all savings associations as well as to national banks.

II. Description of the Interim Final Rule

A. Integration of Savings Associations

This interim final rule amends part 32 to consolidate the lending limit rules applicable to national banks and savings associations. Specifically, the interim final rule amends the authority section, § 32.1(a), to include relevant statutory citations for savings associations; amends the scope section, § 32.1(c), to include savings associations; inserts the term ''savings association'' elsewhere throughout the rule where necessary; and replaces ''OCC'' or ''Comptroller'' with ''appropriate Federal banking agency,'' as appropriate. The rule defines ''appropriate Federal banking agency'' as having the same meaning as in 12 U.S.C. 1813(q). For purposes of part 32, therefore, ''appropriate Federal banking agency'' means the OCC in the case of a national bank or Federal savings association, and the Federal Deposit Insurance Corporation (FDIC) in the case of a state savings association. The OCC also is removing 12 CFR 160.93 as no longer necessary in light of this consolidation. These changes will eliminate duplication and create efficiencies by establishing a single set of lending limit rules for national banks and savings associations, without substantially changing the requirements.

Certain statutory provisions apply only to savings associations, and the interim final rule amends part 32 by adding § 32.3(d) to account for these statutory exceptions, which are included in current § 160.93. First, 12 U.S.C. 1464(u)(2)(A)(i) permits a savings association to make loans to one borrower in an amount not to exceed $500,000, even if its limit as calculated under section 84 would be lower. Second, 12 U.S.C. 1464(u)(2)(A)(ii) prescribes a specific lending limit to develop domestic residential housing units provided certain conditions are met. This latter exception as included in the interim final rule differs from the provision in § 160.93 in that it incorporates a change made by section 404 of the Financial Services Regulatory Relief Act of 2006, which removed from 12 U.S.C. 1464(u)(2)(A)(ii) the requirement that the final purchase price of each single family dwelling unit not exceed $500,000.

To complement the inclusion of these exception, the interim final rule adds an appendix to part 32 that is substantively identical to the current appendix to § 160.93 and that provides further interpretation of the domestic residential housing unit development exception. The interim final rule also adds to § 32.2 the definition of ''residential housing units,'' a term used in this exception and included in § 160.93(b).

In addition, the interim final rule carries over in new § 32.3(d)(3) the provision now contained in § 160.93(d)(5),[3] which provides that notwithstanding the lending limit, a Federal savings association may invest up to 10 percent of unimpaired capital and unimpaired surplus in obligations of one issuer evidenced by commercial paper or corporate debt securities that are, as of the date of purchase, investment grade.[4]

The interim final rule also deletes the current provision at § 160.93(h), which states that the OCC may impose more stringent restrictions on a Federal savings association's loans to one borrower if the agency determines that such restrictions are necessary to protect the safety and soundness of the savings association, since this provision simply repeats section 5(u)(3) of HOLA, 12 U.S.C. 1464(u)(3). The OCC also has authority to take action to prevent any type of unsafe or unsound lending practice by a savings association (or a national bank) on a case-by-case basis, and the OCC's broad authority under 12 U.S.C. 84(d)(1) to establish lending limits applicable to particular categories or classes of loans or extensions of credit broadly authorizes adjustments to the lending limits across types of loans and types of institutions. Furthermore, § 32.1(c)(4), as revised, provides that loans and extensions of credit made by national banks, savings associations, and their domestic operating subsidiaries must be consistent with safe and sound banking practices.

The treatment of financed sales of bank assets in part 32, § 32.2(k)(2)(iii), and the provision now contained in the savings association rule, § 160.93(e), addressing the financed sale of real property acquired in satisfaction of debts previously contracted (DPC property) are comparable. Specifically, current § 32.2(k)(2)(iii) provides that the financed sale of bank assets is not treated as a loan for purposes of the lending limit if the financing does not place the bank in a worse position than when the bank held title to the assets. Section 160.93(e) applies the same treatment to the financed sale of DPC property. The final rule incorporates savings associations into the part 32 provision, renumbered as § 32.2(q)(2)(iii) by this interim final rule. While the scope of the national bank rule is somewhat broader, covering the financed sale of all bank assets and not just DPC property, the financed sale of other bank assets, subject to the existing requirement that the sale not place the bank in a worse position, is consistent with safety and soundness considerations. OCC supervisory experience does not indicate that exempting the financed sale of all bank assets from the general lending limit, where the sale does not place the bank in a worse position, has been a problem at national banks, and therefore the interim final rule applies such treatment to the financed sale of a savings

[1] The OCC has rulemaking authority for lending limit regulations applicable to national banks and to all savings associations, both state- and Federally-chartered. However, the FDIC, not the OCC, is the appropriate Federal banking agency for state savings associations and enforces these rules as to state savings associations.

[2] 12 U.S.C. 84.

[3] As part of the integration of bank and savings association rules, the OCC is considering whether to revise part 1 to include savings associations, in which case we will move this provision for savings associations from part 32 to part 1.

[4] The OCC recently revised § 160.93 in its rulemaking to implement section 939A of the Dodd-Frank Act by adopting alternatives to the use of external credit ratings. *See* 77 FR 35253 (June 13, 2012).

association's assets. Accordingly, under the interim final rule, financed sales of a savings association's own assets, including Other Real Estate Owned, do not constitute loans or extensions of credit if the financing does not put the institution in a worse position than when it held title to the assets. Financed sales that put the savings association in a worse position than when it held title to the assets are subject to the general combined limit set forth in § 32.3(a). This treatment is consistent with § 160.93(e).

The interim final rule also revises the scope provision in part 32. Current § 32.1(c) excludes loans made to affiliates, operating subsidiaries, or Edge Act or Agreement Corporation subsidiaries. The amendment incorporates the exclusion in § 160.93(a) of loans to certain savings association service corporations. It also broadens in some respects the exclusion for loans to certain subsidiaries of national banks. As amended, the exclusion also will apply to loans to any subsidiary consolidated with the bank under Generally Accepted Accounting Principles (GAAP).

Question 1: Has the OCC appropriately addressed the applicability of the lending limit to loans made to subsidiaries with respect to the amendments made to the scope section?

Under the interim final rule, savings associations are required to calculate their lending limits in accordance with the rules set forth in § 32.4. Although stated differently in § 160.93(f), the calculation rule for a national banks and savings associations lending limit produces the same result. Section 32.4 provides that a national bank shall calculate its lending limit as of (1) the most recent of the last day of the preceding calendar quarter (effective as of the earlier of the date on which the bank's Consolidated Reports of Condition and Income (Call Report) is submitted or the date it is required to be submitted) or (2) the date on which there is a change in the bank's capital category (effective when the lending limit is to be calculated.) The OCC may require more frequent calculations for safety and soundness reasons. The current rule for savings associations, set forth at § 160.93(f), provides for the savings association to calculate its lending limit as of the most recent periodic report required to be filed prior to the date of the loan unless the savings association knows or has reason to know of a significant change subsequent to filing the report. Under § 160.93(f), the most recent periodic report is the savings association's Call Report, which is filed, as with national banks, for each calendar quarter. A ''significant change'' would include a change in the savings association's capital category. Therefore, there is no substantive difference in how a savings association will calculate its lending limit under the interim final rule.

Part 32 and § 160.93 differ in certain respects and there are some differences that are not being incorporated into part 32. First, the scope of part 32 is narrower than that of § 160.93. Part 32 applies the lending limit restrictions to loans and extensions of credit made by national banks and their *domestic operating subsidiaries.* The lending limit restrictions in current § 160.93 apply to loans made by savings associations and *all their subsidiaries.*

Question 2: Has the OCC appropriately addressed the applicability of the lending limit to loans made by subsidiaries of savings associations by narrowing the scope of the rule to domestic operating subsidiaries?

Second, § 160.93(f) requires savings associations to document their lending limit compliance if the loan is greater than $500,000 or 5 percent of unimpaired capital and unimpaired surplus. The interim final rule does not include this unique documentation requirement in part 32. Consistent with safe and sound banking practices, institutions should always maintain documentation showing compliance with the lending limit.

The interim final rule also makes a clarifying change to § 32.7, Residential real estate loans, small business loans, and small farm loans, by amending the title of this section to reference the ''Supplemental Lending Limits Program,'' and by replacing the phrase ''special lending limits'' with ''supplemental lending limits'' throughout the section. This conforms § 32.7 to the terminology currently used by the OCC.

B. Section 610 of the Dodd-Frank Act

The interim final rule amends part 32 to implement section 610 of the Dodd-Frank Act. Section 610 amends section 5200(b) of the Revised Statutes [5] to provide that the definition of ''loans and extensions of credit'' includes any credit exposure to a person arising from a derivative transaction, repurchase agreement, reverse repurchase agreement, securities lending transaction, or securities borrowing transaction between a national bank and the person. Section 610 also amends section 5200(b) by adding a definition of ''derivative transaction'' to include any transaction that is a contract, agreement, swap, warrant, note, or option that is based, in whole or in part, on the value of, any interest in, or any quantitative measure or the occurrence of any event relating to, one or more commodities, securities, currencies, interest or other rates, indices, or other assets. These amendments are effective July 21, 2012, two years after enactment of the Dodd-Frank Act.

Section 610 adds to the scope and complexity of the lending limits. To implement these new requirements, the interim final rule amends the definition of ''loans and extensions of credit'' in § 32.2, to include certain credit exposure arising from a derivative transaction or a securities financing transaction. A securities financing transaction is defined as a repurchase agreement, reverse repurchase agreement, securities lending transaction, or securities borrowing transaction. The interim final rule also removes current § 32.2(k)(1)(iii), which excludes repurchase agreements for Type I securities from the definition of loan or extension of credit. Instead, it adds a provision, set forth at § 32.3(c)(11) and explained below, that exempts credit exposure arising from securities financing transactions involving Type I securities for all securities financing transactions.[6]

The interim final rule also adds a definition of ''derivative transaction'' as new paragraph (k) of § 32.2 that mirrors the definition added to section 5200 of the Revised Statutes by section 610. To complement these changes, it amends the definition of ''borrower,'' redesignated as § 32.2(b), to include a party to whom the bank has credit exposure arising from a derivative transaction or a securities financing transaction. It also amends § 32.2 to add the definitions of ''credit derivative,'' ''qualifying central counterparty,'' and ''qualifying master netting agreement,'' all defined as in current 12 CFR part 3, as well as ''effective margining arrangement,'' ''eligible credit derivative,'' and ''eligible protection provider.'' These terms are used in new § 32.9, as described below.

Question 3: Are these terms adequately defined? Are there other terms we should define in part 32 to help implement section 610 of the Dodd-Frank Act?

Section 610 does not provide guidance on how to measure the

[5] 12 U.S.C. 84(b).

[6] We note, however, that the deletion of current § 32.2(k)(1)(iii), renumbered as § 32.2(q)(1)(vii) in the interim final rule, is effective as of January 1, 2013, the date new § 32.3(c)(11) takes effect pursuant to new § 32.1(d), discussed below.

fluctuating credit exposure of derivative transactions and securities financing transactions for purposes of the lending limit. In order to reduce the practical burden of such calculations, particularly for smaller and mid-size banks and savings associations, the OCC is providing different options for measuring the appropriate exposures in new § 32.9, as discussed below. The OCC believes these alternatives implement the statutory changes, consistent with safety and soundness and the goals of the statute, in a manner that seeks to reduce unnecessary new regulatory burden.

1. Derivative Transactions

The ''credit exposure'' arising from a derivative transaction is commonly viewed as the sum of the current credit exposure on the contract or portfolio plus some measure of potential future exposure (PFE). Under the interim final rule, the ''current credit exposure'' is determined by the mark-to-market value (MTM) of the derivative contract. The current MTM is generally zero at execution of the contract. Subsequent to the execution of the contract, if the MTM value is positive, then the current credit exposure equals that MTM value. If the MTM value is zero or negative, than the current credit exposure is zero. This current credit exposure determination is the same as that included in the capital rules at 12 CFR part 3, Appendix A, § 3(b)(7)(A).

PFE, on the other hand, recognizes the possibility that the MTM amount may increase over time, based upon changes in market factors. The PFE, when added to the MTM amount, can be viewed as the anticipated ceiling of credit exposure at the execution of a derivative transaction.

The interim final rule provides three methods for calculating credit exposure of derivative transactions other than credit derivatives. Unless required to use a specific method by the appropriate Federal banking agency pursuant to § 32.9(b)(3), a national bank or savings association may choose which of these methods it will use. However, a national bank or savings association must use the same method for calculating credit exposure arising from all derivative transactions. Examples of these three approaches are reflected in the Explanatory Table that appears in section 4 of this preamble.

Question 4: Is the requirement to use the same method when calculating credit exposure for all non-credit derivative transactions appropriate? Should institutions be allowed to use a different method for different types of transactions or for the same transaction type but different parties?

Under the first method, the ''Internal Model Method,'' national banks and savings associations may model their exposures via an internal model approved by the OCC. Under this method, the counterparty credit exposure of a derivative transaction will be measured by a model that estimates a credit exposure amount, inclusive of the current MTM. A bank or savings association using this approach should calculate its exposure by using the internal model that it considers most appropriate in evaluating the risk associated with derivative transactions. The model must have been approved for purposes of section 53 of the Advanced Approaches Appendices of the appropriate Federal banking agencies' capital rules, 12 CFR part 3, Appendix C for national banks; 12 CFR part 167, Appendix C for Federal savings associations; and 12 CFR 390, subpart Z, Appendix A for state savings associations, or be another appropriate model approved by the appropriate Federal banking agency. A national bank or savings association that elects to calculate its credit exposure by using the Internal Model Method will be permitted to net credit exposure of derivative transactions arising under the same qualifying master netting agreement, thereby reducing the institution's exposure to the borrower to the net exposure under the master netting agreement.

Question 5: Would it be more appropriate to require that national banks and savings associations use other models instead of the one included in part 3?

Second, pursuant to § 32.9(b)(1)(ii), a national bank or savings association may choose to measure the credit exposure arising from a derivative transaction under the ''Conversion Factor Matrix Method.'' Under this method, the credit exposure will equal and remain fixed at the PFE of the derivative transaction, as determined at execution of the transaction by reference to a simple look-up table (Table 1). This table is similar to Table B included in the Risk-Based Capital Guidelines Appendix of 12 CFR part 3, but has been adjusted so that the table adequately reflects the absence of the current MTM component of the credit exposure of these transactions. This approach will be considerably less burdensome than the Internal Model Method because institutions would not have to establish statistical simulations of future PFE calculations.

Under the third method, the Remaining Maturity Method, as set forth in § 32.9(b)(1)(iii), the measurement of the credit exposure incorporates both the current MTM and the transaction's remaining maturity (measured in years) as well as a fixed add-on for each year of the transaction's remaining life. Specifically, this method measures credit exposure by adding the current MTM value of the transaction to the product of the notional amount of the transaction, the remaining maturity of the transaction, and a fixed multiplicative factor. These multiplicative factors differ based on product type and are determined by a look-up table (Table 2).

The credit exposure calculated under the Remaining Maturity Method accounts for the diminishing maturity of the transaction as well as the current MTM of the transaction. Institutions may find that any additional burden involved with determining the MTM under this optional method is balanced by the fact that, depending on the MTM, as the maturity decreases, the credit exposure also decreases, thereby permitting additional extensions of credit under the lending limit.

In addition, the Remaining Maturity Method incorporates the fact that a negative MTM for a bank offsets the positive contribution to exposure from the remaining life portion of the calculation, though the overall calculation has a floor of zero.

Question 6: Does the calculation under the Remaining Maturity Method adequately measure the credit exposures attributable to derivative transactions? For the Conversion Factor Matrix Method, has the OCC adjusted the numbers in the look-up table (Table 1) in a manner that adequately captures, overstates, or understates the credit exposures of these transactions? Similarly, for the Remaining Maturity Method, has the OCC calibrated the values included in Table 2 correctly so that they appropriately measure the credit risk?

In the case of credit derivatives, in which a national bank or savings association buys or sells credit protection against loss on a third-party reference entity, a special rule applies that is set forth in § 32.9(b)(2) of the interim final rule. Specifically, a national bank or savings association that uses the Conversion Factor Matrix Method or Remaining Maturity Method, or that uses the Internal Model Method without entering an effective margining arrangement with its counterparty as defined in § 32.2(l) of the interim final rule, calculates the counterparty credit exposure arising from credit derivatives by adding the net notional value of all protection purchased from the

counterparty on each reference entity. For example, Bank A buys and sells credit protection from and to Bank B on Firms X, Y and Z. No effective margining arrangement exists between the banks. Bank A's net notional protection purchased from Bank B is $50 for Firm X and $100 for Firm Y. Bank A's net protection sold to Bank B is $35 for Firm Z. The lending limit exposure of Bank A to Bank B is $150.

In addition, a national bank or savings association calculates the credit exposure to a reference entity [7] arising from credit derivatives by adding the notional value of all protection sold on the reference entity. For example, Bank C buys and sells credit protection on Firms 1, 2 and 3. Bank C's notional protection sold is $100 for Firm 1, $200 for Firm 2 and $300 for Firm 3. The lending limit exposure of Bank C to Firm 1 is $100, to Firm 2 is $200 and to Firm 3 is $300.

However, the bank or savings association may reduce its exposure to a reference entity by the amount of any eligible credit derivative, as defined in § 32.2(m), purchased on that reference entity from an eligible protection provider, as defined in § 32.2(o). In the last example, if Bank C purchases protection on Firm 3 from an eligible protection provider in the amount of $25 via an eligible credit derivative, Bank C can reduce its $300 lending limit exposure to Firm 3 to $275.

Question 7: Has the OCC appropriately provided for exposure to both counterparties and reference entities?

Question 8: Should protection purchased from eligible protection providers by way of eligible credit derivatives be allowed to reduce other exposures under the lending limit, for example, loans traditionally covered by the lending limit and counterparty credit exposure arising from financial derivatives, at least where the protection contract maturity is as long as the maturity of the other exposure?

Although both the Internal Model Method, the Remaining Maturity Method, and the Conversion Factor Matrix Method will generally be available to all institutions, the interim final rule provides that the OCC, in the case of national banks and Federal savings associations, and the FDIC, in the case of state savings associations, may require use of a specific method to calculate credit exposure if it finds that such method is necessary to promote the safety and soundness of the bank or savings association.

The OCC is aware that, under the Conversion Factor Matrix Method, the actual MTM value at a given point in the life of a derivative contract may exceed the initially estimated PFE, and that it would be possible for a bank to make a new loan that, combined with the actual exposure (were such exposure based on current MTM value), could exceed the lending limit. The OCC believes that the risks in such case are limited and can be addressed in the supervisory process by examiners appropriately responding to unsafe and unsound concentrations, and that the certainty and simplicity of allowing non-complex banks and savings associations to ''lock in'' the attributable exposure at the execution of the contract balance the possible risks.

Question 9: Has the OCC properly reflected the different derivative transactions undertaken by community, mid-size, and large institutions for purposes of application of the lending limits? Does the rule adequately capture the actual risks of these transactions?

2. Securities Financing Transactions

The interim final rule provides national banks and savings associations with two options for determining the credit exposure of securities financing transactions, defined as repurchase agreements, reverse repurchase agreements, securities lending transactions, and securities borrowing transactions. These methods recognize that the size of the institution and complexity and volume of the securities financing transactions engaged in by the institution may warrant different approaches. As with derivative transactions, unless required to use a specific method pursuant to § 32.9(c)(2), a national bank or savings association may choose which of the two methods it will use and must use this same method for calculating credit exposure arising from all securities financing transactions.

Question 10: Is the requirement to use the same method to calculate credit exposure for all securities financing transactions appropriate? Should institutions be allowed to use a different method for different types of securities financing transactions, or for the same transaction type but different parties?

The first option, the Internal Model Method, provides that an institution may calculate the credit exposure of a securities financing transaction by using an internal model approved by the appropriate Federal banking agency for purposes of § 32(d) of the Internal-Ratings-Based Appendices of the OCC or FDIC's capital rules,[8] as appropriate, or any other appropriate model approved by the appropriate Federal banking agency.

The calculation of the credit exposure under the second option, the Non-Model Method, is based on the type of securities financing transaction at issue. As with derivative transactions, the OCC finds that for non-complex institutions engaged in these transactions, the simpler approach to measuring credit exposure in the Non-Model Method adequately protects the safety and soundness of the institution while mitigating regulatory burden. The specific method for calculating credit exposure under the Non-Model Method for each type of securities financing transaction is set forth below.

Repurchase agreements and securities lending transactions. In a repurchase agreement, also known as a liability repo, an institution that owns securities borrows funds by selling the specified securities to another party under a simultaneous agreement to repurchase the same securities at a specified price and date. In a securities lending transaction, an institution lends securities to a counterparty (who may use them to cover a short sale or satisfy some other obligation). A securities loan is collateralized, usually by cash but sometimes by other securities. The economics of a securities lending transaction are identical to a repurchase agreement when the collateral received by the institution is cash. If the collateral is securities, the economics are slightly different because there is the risk of market price changes on both the securities loaned and the securities received as collateral. For example, the value of the security loaned could increase, and the value of the collateral received could decrease.

The interim final rule provides under the Non-Model Method, in §§ 32.9(c)(1)(ii)(A) and (ii)(B)(*1*), that for a repurchase agreement or a securities loan where the collateral is cash, exposure under the lending limit will be equal to and remain fixed at the net current exposure, *i.e.,* the market value at execution of the transaction of

[7] Section 610 of the Dodd-Frank Act applies the lending limit to counterparty credit exposures arising from derivative transactions (''credit exposure *to a person* arising from a * * * transaction between the national banking association *and the person''*) (emphasis added). Section 610 (a)(1), as codified at 12 U.S.C. 84(b)(1)(C). The OCC's authority to apply the lending limit to exposures to reference entities in credit derivatives derives from 12 U.S.C. 84(b)(1)(B) (loans subject to the lending limit include ''to the extent specified by the Comptroller of the Currency, any liability * * * to advance funds to or on behalf of a person pursuant to a contractual commitment'').

[8] 12 CFR part 3, Appendix C for national banks; 12 CFR part 167, Appendix C for Federal savings associations; and 12 CFR 390, subpart Z, Appendix A for state savings associations.

securities transferred to the other party, less cash received from the other party. For securities lending transactions where the collateral is other securities (*i.e.,* not cash), § 32.9(c)(1)(ii)(B)(*2*) of the interim final rule provides that the exposure will be equal to and remain fixed at the product of the higher of the two haircuts associated with the securities, as determined by a look-up table included in the regulation (Table 3), and the higher of the two par values of the securities. The haircuts in Table 3 are consistent with the standard supervisory market price volatility haircuts in 12 CFR part 3, Appendix C.

Reverse repurchase agreements (asset repos) and securities borrowing transactions. In a reverse repurchase agreement, also known as an asset repo, an institution lends money to a counterparty by purchasing a security and agreeing to resell the security to the counterparty at a future date. For example, an institution may enter into an asset repo to invest excess liquidity or to obtain securities to use as collateral in other transactions, or an institution may need securities to cover short positions or to pledge against public funds to obtain a low-cost source of funding.

In a typical securities borrowing transaction, an institution needing to borrow securities obtains the securities from a securities lender and posts collateral in the form of cash and/or marketable securities with the securities lender (or an agent acting on behalf of the securities lender) in an amount that fully covers the value of the securities borrowed plus an additional margin, usually ranging from two to five percent. The economics of a securities borrowing transaction are identical to a reverse repurchase agreement (asset repo) when the collateral posted by the institution is cash.

Under the Non-Model Method, §§ 32.9(c)(1)(ii)(C) and (c)(1)(ii)(D)(*1*) of the interim final rule provide that the credit exposure arising from a reverse repurchase agreement or a securities borrowing transaction where the collateral is cash will equal and remain fixed at the product of the haircut associated with the collateral received, as determined in Table 3, and the amount of cash transferred to the other party. Section 32.9(c)(1)(ii)(D)(2) provides that the credit exposure arising from a securities borrowed transaction where the collateral is other securities (*i.e.,* not cash) shall equal and remain fixed at the product of the higher of the two haircuts associated with the securities, as determined in Table 3, and the higher of the two par values of the securities.

Question 11: Are the look-up tables provided in the rule appropriate? Would another look-up table included in 12 CFR part 3 be more appropriate? Do the numbers included in Table 1 adequately capture the credit exposure of the transactions in question?

Provision applicable to all securities financing transactions—Type I securities. New § 32.3(c)(11) of the interim final rule excepts from the lending limit credit exposures arising from securities financing transactions in which the securities being financed are certain government securities, specifically, Type I securities, as defined in 12 CFR 1.2(j), in the case of national banks; or securities listed in section 5(c)(1)(C), (D), (E), and (F) of HOLA and general obligations of a state or subdivision as listed in section 5(c)(1)(H) of HOLA, 12 U.S.C. 1464(c)(1)(C), (D), (E), (F), and (H), in the case of savings associations.[9] This exception is appropriate because these transactions typically involve less risk and involve securities in which national banks and savings associations may invest under 12 U.S.C. 24 (Seventh) and section 5(c)(1) of the HOLA, as appropriate, without limit. This treatment follows the treatment of reverse repurchase agreements in current part 32, under which such transactions are treated as loans subject to an exception for transactions relating to Type I securities as defined in 12 CFR part 1. This exception may reduce regulatory burden for community and midsize institutions because it is relatively uncommon for these institutions to engage in a securities financing transaction involving non-type I securities and non-5(c)(1) securities.[10]

(3) *Mandatory use of model.* Finally, as with derivative transactions, § 32.9(c)(2) provides that the OCC or FDIC, as appropriate, may require a national bank or savings association to use a specific method to calculate the credit exposure of securities financing transactions if the OCC or FDIC finds that this method is necessary to promote the safety and soundness of the bank or savings association.

Question 12: Has the OCC properly accounted for the different securities financing transactions in institutions of different size and complexity? Does the rule adequately capture the actual risks of these transactions?

Question 13: Please comment on the provision that provides the OCC and FDIC with authority to require modeling. Is this discretion appropriately described?

3. Provisions Applicable to Both Derivative Transactions and Securities Financing Transactions

Unless described above, all provisions of part 32 will apply to credit exposures arising from a derivative transaction or a securities financing transaction, including the lending limit calculation rules of § 32.4 and the combination rules of § 32.5. In addition, the interim final rule adds the following provisions to part 32 that apply only to derivative transactions or securities financing transactions.

Exception. The interim final rule amends § 32.3(c) to add intraday credit exposures arising from a derivative transaction or securities financing transaction as an additional exception to the lending limits for national banks and savings associations. This exception will help minimize the impact of the interim final rule on the payment and settlement of financial transactions and is consistent with the current application of national bank lending limits to certain transactions.[11]

Question 14: Is the intraday exception appropriate? Should the OCC exempt other types of intraday exposures?

[9] For national banks, a Type I security means: (1) Obligations of the United States; (2) obligations issued, insured, guaranteed by a department or an agency of the United States Government, if the obligation, insurance, or guarantee commits the full faith and credit of the United States for the repayment of the obligation; (3) obligations issued by a department or agency of the United States, or an agency or political subdivision of a state of the United States, that represent an interest in a loan or a pool of loans made to third parties, if the full faith and credit of the United States has been validly pledged for the full and timely payment of interest on, and principal of, the loans in the event of non-payment by the third party obligor(s); (4) general obligations of a state of the United States or any political subdivision thereof; and municipal bonds if the national bank is well capitalized; (5) obligations authorized under 12 U.S.C. 24 (Seventh) as permissible for a national bank to deal in, underwrite, purchase, and sell for the bank's own account, including qualified Canadian government obligations; and (6) other securities the OCC determines to be eligible as Type I securities under 12 U.S.C. 24 (Seventh). *See* section 24 (Seventh) of the Revised Statutes, 12 U.S.C. 24 (Seventh) and 12 CFR 1.2(j). For Federal savings associations, these investments include obligations of, or fully guaranteed as to principal and interest by, the United States; investments in securities of the Federal Home Loan Banks, the Federal Home Loan Mortgage Corporation, the Federal National Mortgage Association, the Government National Mortgage Association, or any agency of the United States; and investments in obligations issued by any state or political subdivision thereof. *See* section 5(c)(1) of the HOLA, 12 U.S.C. 1464(c)(1).

[10] *See* current § 32.2(k)(1)(iii). As noted above, the interim final rule deletes § 32.2(k)(1)(iii) (renumbered by the interim final rule as (§ 32.2(q)(1)(vii)) as we have added new § 32.3(c)(11).

[11] We note that the lending limit rules have long provided that an intraday overdraft and a sale of Federal funds with a maturity of one day or less are not subject to the lending limit. *See* 12 CFR 32.2(k)(l)(v), (vi) of the current rule.

Should the OCC provide for other exemptions for credit exposures arising from derivative transactions or securities financing transactions? Why?

Nonconforming Loans and Extensions of Credit. The interim final rule adds a new paragraph (a)(3) to § 32.6 to provide that a credit exposure arising from a derivative transaction or securities financing transaction and determined by the Internal Model Method specified in § 32.9(b)(1)(i) or § 32.9 (d)(3), respectively, will not be deemed a violation of the lending limits statute or regulation and will be treated as nonconforming if the extension of credit was within the national bank's or savings association's legal lending limit at execution and is no longer in conformity because the exposure has increased since execution.

Question 15: The interim final rule does not address the applicability of the lending limit rules to a national bank's or savings association's contingent obligation under derivative clearinghouse rules to advance funds to a clearinghouse guaranty fund. Please comment on whether and to what extent part 32 should to apply to these obligations and if applicable, how the credit exposure of these obligations should be measured.

Question16: Should the lending limit calculation rules set forth at § 32.4 or the combination rules set forth at § 32.5 be adjusted or changed in any way given the addition of credit exposures arising from derivative and securities financing transactions to part 32 as new categories of extensions of credit?

4. Explanatory Table

The table below is provided to aid in understanding the interim final rule. It is not a substitute for the interim final rule itself.

Transaction type	What happens?	Credit risk	Transaction purpose	Credit exposure	Example
Interest Rate Swap	Banks execute interest rate and other swaps by signing a transaction confirmation, which becomes part of an ISDA Master Agreement.	If the bank receives a fixed rate, it has a mark-to-market (MTM) gain if interest rates fall. That represents a current credit exposure (CCE). If the bank pays a fixed rate, it has a MTM gain if rates rise. A MTM gain is CCE. Beyond current exposure, the bank has a risk of potential future exposure (PFE), *i.e.,* the amount the CCE might become over time.	Banks do interest rate swaps to convert cash flows from fixed to floating, or vice versa.	Banks that have an approved model can choose to use the model to determine the attributable credit exposure. Institutions can lock-in, or fix, attributable credit exposure at the potential future exposure (PFE) on day 1 by simply multiplying notional principal amount by a conversion factor provided in table. No requirement to calculate daily mark-to-market or re-calculate PFE.	*Non-modeled bank:* Bank A without an approved model executes a $10 million, 5-year, interest rate swap. It receives a fixed rate and pays floating. The PFE factor for this swap is 1.5%. Bank A ''locks-in'' attributable exposure of $150,000 ($10 million × 1.5%), the day-one PFE amount *Under remaining maturity method:* Bank A enters a 5-year interest rate swap with notional value of $100,000 and MTM of zero at execution. At execution, Bank A's exposure is $7,500 ($0 + ($100,000 × 5 × 1.5%)). In year 2, Bank A makes loan to counterparty of interest rate swap. At this time, MTM of swap is $1,000. Bank A's lending limit exposure is $5,500 ($1,000 + ($100,000 × 3 × 1.5%)). If the MTM of the swap in year 2 is negative $1,000, Bank A's lending limit exposure for the swap is $3,500 (−$1,000 + ($100,000 × 3 × 1.5%)). If the MTM of the swap in year 2 is negative $10,000. Bank A's lending limit exposure for the swap is zero (−$10,000 + ($100,000 × 3 × 1.5%) = negative $5,500 which is less than zero; zero is the floor for the calculated exposure).

Transaction type	What happens?	Credit risk	Transaction purpose	Credit exposure	Example
Credit Derivative	Banks buy or sell protection on a reference entity (RE). Protection buyers are hedging risk; protection sellers are taking on risk (*e.g.,* using the CDS exposure as a loan substitute).	The protection seller is exposed to default and/or credit deterioration of the RE. It will make a payment upon default of the RE. The protection buyer is exposed to the counterparty risk of the dealer; the buyer expects payment from the dealer if there is a default.	Transactions such as credit default swaps allow institutions to sell credit protection (*i.e.,* assume credit risk) against loss on a third-party reference entity. Protection sellers often use CDS as loan substitutes. Protection buyers typically use credit derivatives to hedge credit exposures in their loan portfolios.	*To Counterparty:* Banks that model derivatives exposures (see above) determine the attributable exposure based on the model provided there is an effective margining arrangement. Banks that use the conversion factor approach (see above) or that model but do not have an effective margining arrangement calculate the attributable exposure as the sum of all net notional protection purchased amounts across reference entities *To Reference Entities:* Banks calculate the exposure as the net notional protection sold amount. The bank may reduce this amount by the amount of any eligible credit derivative purchased on that reference entity from an eligible protection provider.	*Modeled bank with effective margining arrangement:* Bank A buys and sells credit protection from and to Bank B on Firms X, Y and Z. There is an effective margining arrangement between the banks. Banks A and B use their models to determine their counterparty credit exposures *Non-modeled bank or bank without effective margining arrangement:* Bank A buys and sells credit protection from and to Bank B on Firms X, Y and Z. Bank A's net notional protection purchased from Bank B is $50 for Firm X and $100 for Firm Y. Bank A's net protection sold to Bank B is $35 for Firm Z. The lending limit exposure of Bank A to Bank B is $150. Bank C buys and sells credit protection on Firms 1, 2, and 3. Bank C's notional protection sold is $100 for Firm 1, $200 for Firm 2 and $300 for Firm 3. The lending limit exposure of Bank C to Firm 1 is $100, to Firm 2 is $200 and to Firm 3 is $300. If Bank C purchases protection on Firm 3 from an eligible protection provider in the amount of $25 via an eligible credit derivative, Bank C can reduce its $300 lending limit exposure to Firm 3 to $275.
Reverse Repo (bank asset).	Lend cash against collateral.	Collateral value falls	Provide secured financing; invest funds; run a dealer matched book.	Attributable credit exposure for lending limit purposes is the product of the haircut associated with the collateral received and the amount of cash transferred.	*Non-modeled bank:* Lend $100 secured by securities worth $102 that have haircut of 5%. LLL exposure is $5 ($100 × 5%).
Repo (bank liability)	Borrow cash against collateral.	Collateral value rises	Finance inventory; run a dealer matched book.	Attributable credit exposure for lending limit purposes is the difference between the market value of securities transferred less cash received (*i.e.,* the net current credit exposure).	*Non-modeled bank:* Bank executes a repo in which it borrows $100, pledging securities worth $102. Attributable exposure is $2, the amount of net current credit exposure.

Transaction type	What happens?	Credit risk	Transaction purpose	Credit exposure	Example
Securities Borrowed (bank asset).	Lend cash against collateral.	Collateral value falls	Obtain collateral to cover a short position.	If cash is collateral, treat the same as reverse repo: Attributable credit exposure for lending purposes is the product of the haircut associated with the collateral received and the amount of cash transferred. If collateral is securities: Attributable credit exposure for lending limit purposes is the product of the higher of the two haircuts associated with the two securities and the higher of the two par values of the securities.	*Non-modeled bank, cash as collateral:* Bank borrows a $100 par value security that has a fair value of $102. The bank pledges $100 in cash. The haircut associated with the security is 5%. The attributable exposure is $5 ($100 × 5%). *Non-modeled bank, securities as collateral.* Bank borrows a $100 par value security (with fair value $101) and pledges a security with a par value of $100. The fair value of the security pledged is $102. The haircut on the borrowed security is 2% and the haircut on the pledged security is 5%. The attributable exposure is $5 ($100 × 5%), based upon the higher of the two security haircuts and the higher of the two par values (here the par values were the same).
Securities Loaned (bank liability).	Borrow cash against collateral.	Collateral value rises	Generate income	If collateral received is cash, treat the same as a repo: The attributable credit exposure for lending limit purposes is the net current credit exposure. If the collateral received is other securities: The attributable credit exposure for lending limit purposes is the product of the higher of the two haircuts associated with the two securities and the higher of the two par values of the securities.	*Non-modeled bank, cash as collateral:* Bank lends a $102 security (par value of $100) and receives $100 in cash collateral. Attributable exposure is $2, the net current credit exposure *Non-modeled bank, securities as collateral:* Bank lends a $100 par value security (fair value $101) and receives another security as collateral. The collateral has a $100 par value (and $102 fair value). The haircut on the loaned and borrowed securities are 2% and 5% respectively. Attributable exposure is $5, based upon the higher of the two security haircuts and the higher of the two par values (here the par values were the same).

III. Effective and Compliance Dates

This interim final rule is effective on July 21, 2012. Pursuant to the Administrative Procedure Act (APA), at 5 U.S.C. 553(b)(B), notice and comment are not required prior to the issuance of a final rule if an agency, for good cause, finds that ''notice and public procedure thereon are impracticable, unnecessary, or contrary to the public interest.''

The amendments made by section 610 of the Dodd-Frank Act are effective on July 21, 2012.[12] These amendments are not self-executing, however, in that they do not provide national banks and savings associations with the methodology necessary to comply with the new requirements they impose.

The OCC's approach to implementation of these standards is related to, and our rulemaking in this respect has been informed by, proposals made by other agencies to implement provisions of the Dodd-Frank Act raising similar issues and the comments received by other agencies in connection with such rulemakings.[13] Consideration of this information was appropriate in connection with the OCC's implementation of the amendments made by section 610 of the Dodd-Frank Act.

[12] Dodd-Frank Act, section 610(c).

[13] *E.g.,* the Federal Reserve Board's rulemaking implementing section 165(e) of the Dodd Frank Act (single counterparty credit exposures of large bank holding companies and certain nonbank financial companies (covered companies)), 77 FR 594 (Jan. 5, 2012).

Based on consideration of the information thereby available, this interim final rule provides clarity regarding the OCC's application of the requirements of section 610. The OCC finds that, under these circumstances, prior notice and comment are impracticable and that the public interest is best served by making the rule effective on the same day as the amendments made by section 610 of the Dodd-Frank Act are effective. Otherwise, national banks and savings associations would be subject to unpredictable assertions of interpretations of the scope and application of the new requirements of section 610 that could result in applications of section 610 contrary to the OCC's interpretation of that section.

For these same reasons, with respect to the amendments implementing section 610 of the Dodd-Frank Act, the OCC finds good cause to dispense with the delayed effective date otherwise required by section 302 of the Riegle Community Development and Regulatory Improvement Act of 1994 (RCDRIA), 12 U.S.C. 4802.[14]

The OCC recognizes, however, that national banks and savings associations will need time to conform their operations to the amendments implementing section 610 as applied by the OCC. The interim final rule, therefore, includes at § 32.1(d) a temporary exception from the lending limit rules for extensions of credit arising from derivative transactions or securities financing transactions, until January 1, 2013. This exception is issued pursuant to section 5200(d)(1) of the Revised Statutes, 12 U.S.C. 84(d)(1), which authorizes the OCC to prescribe rules to administer and carry out the purposes of the lending limit statute, including rules to establish limits or requirements other than those specified in the statute for particular classes or categories of loans or extensions of credit. As a result of this exception, institutions will not be required to comply with amendments in the interim final rule implementing section 610 of the Dodd Frank Act until January 1, 2013. As a practical matter, the temporary exception afforded by the interim final rule fulfills the same objectives as a delayed effective date, that is, providing affected institutions with time to adjust their systems and procedures to come into compliance with new requirements. Notwithstanding this exception to the particular new lending limits provisions, the OCC retains full authority to address credit exposures that present undue concentrations on a case-by-case basis through our existing safety and soundness authorities.

In addition to the amendments required to implement section 610, this rulemaking also contains amendments that are necessary to consolidate the lending limit rules applicable to national banks and savings associations. As indicated previously, the integration amendments included in this interim final rule do not impose any new reporting, disclosure, or other requirements on national banks or savings associations. To the extent that the interim final rule differs from the current lending limit rules, these differences reduce compliance requirements. Accordingly, good cause exists to make these amendments effective without prior notice and comment. For the same reasons, the RCDRIA does not apply to the integration-related amendments made by this interim final rule.

We note that after the 45-day comment period, the OCC may amend this interim final rule based on comments received. If any such amendments are required, we will issue a final rule as expeditiously as possible, and will adjust the compliance date if, and as, necessary.

IV. Solicitation of Comments

In addition to the specific requests for comment outlined in this **SUPPLEMENTARY INFORMATION** section, the OCC is interested in receiving comments on all aspects of this interim final rule. In particular, we request suggestions on ways to streamline this rule and reduce regulatory burden while still accomplishing the objectives that the rule seeks to achieve.

V. Regulatory Analysis

Regulatory Flexibility Act Analysis

Pursuant to the Regulatory Flexibility Act (RFA),[15] 5 U.S.C. 603, an agency must prepare a regulatory flexibility analysis for all proposed and final rules that describe the impact of the rule on small entities, unless the head of an agency certifies that the rule will not have ''a significant economic impact on a substantial number of small entities.'' However, the RFA applies only to rules for which an agency publishes a general notice of proposed rulemaking pursuant to 5 U.S.C. 553(b).[16] Pursuant to the APA at 5 U.S.C. 553(b)(B), general notice and an opportunity for public comment are not required prior to the issuance of a final rule when an agency, for good cause, finds that ''notice and public procedure thereon are impracticable, unnecessary, or contrary to the public interest.'' As discussed above, the OCC has determined for good cause that the APA does not require general notice and public comment on this interim final rule and, therefore, we are not publishing a general notice of proposed rulemaking. Thus, the RFA does not apply to this interim final rule.

Unfunded Mandates Reform Act

Section 202 of the Unfunded Mandates Reform Act of 1995, Public Law 104–4 (2 U.S.C. 1532) (Unfunded Mandates Act), requires that an agency prepare a budgetary impact statement before promulgating any rule likely to result in a Federal mandate that may result in the expenditure by state, local, and tribal governments, in the aggregate, or by the private sector, of $100 million or more in any one year. If a budgetary impact statement is required, § 205 of the Unfunded Mandates Act also requires an agency to identify and consider a reasonable number of regulatory alternatives before promulgating a rule. The OCC has determined that there is no Federal mandate imposed by this rulemaking that may result in the expenditure by state, local, and tribal governments, in the aggregate, or by the private sector, of $100 million or more in any one year. Accordingly, final rule is not subject to § 202 of the Unfunded Mandates Act.

Paperwork Reduction Act

In accordance with the requirements of the Paperwork Reduction Act (PRA) of 1995 (44 U.S.C. 3501–3521), the OCC may not conduct or sponsor, and a respondent is not required to respond to, an information collection unless it displays a currently valid Office of Management and Budget (OMB) control number. This rule contains information collection requirements under the PRA, which have been previously approved by OMB under OMB Control No. 1557–0221. The requirements under this collection remain unchanged except for the addition of savings associations as respondents. This information collection will be amended through a non-substantive change to include the burden for savings associations.

[14] The RCDRIA requires that, subject to certain exceptions, regulations imposing additional reporting, disclosure, or other requirements on insured depository institutions take effect on the first day of the calendar quarter after publication of the final rule. This effective date requirement does not apply if the agency finds for good cause that the regulation should become effective before such time.

[15] Public Law 96–354, Sept. 19, 1980.

[16] 5 U.S.C. 603(a), 604(a).

List of Subjects

12 CFR Part 32

National banks, Reporting and recordkeeping requirements.

12 CFR Part 159

Reporting and recordkeeping requirements, Savings associations.

12 CFR Part 160

Consumer protection, Investments Mortgages, Reporting and recordkeeping requirements, Savings associations, Securities.

For the reasons set forth in the preamble, chapter I of title 12 of the Code of Federal Regulations is amended as follows:

PART 32—LENDING LIMITS

■ 1. The authority citation for part 32 is revised to read as follows:

Authority: 12 U.S.C. 1 *et seq.,* 84, 93a, 1462a, 1463, 1464(u), and 5412(b)(2)(B).

■ 2. Section 32.1 is amended by:
■ a. Revising paragraphs (a) and (c)(1) through (c)(3);
■ b. In paragraph (b), adding the phrase ''and savings associations'' after the word ''banks'';
■ c. In paragraph (c)(4), adding the phrase '', savings associations,'' after the word ''banks''; and
■ d. Adding new paragraph (d).

The revisions and addition read as follows:

§ 32.1 Authority, purpose and scope.

(a) *Authority.* This part is issued pursuant to 12 U.S.C. 1 *et seq.,* 12 U.S.C. 84, 93a, 1462a, 1463, 1464(u), and 5412(b)(2)(B).

* * * * *

(c) *Scope.* (1) Except as provided by paragraph (d) of this section, this part applies to all loans and extensions of credit made by national banks, savings associations, and their domestic operating subsidiaries. For purposes of this part, the term ''savings association'' includes Federal savings associations and state savings associations, as those terms are defined in 12 U.S.C. 1813(b). This part does not apply to loans or extensions of credit made by a national bank, a savings association, and their domestic operating subsidiaries to the bank's or savings association's:

(i) Affiliates, as that term is defined in 12 U.S.C. 371c(b)(1) and (e), as implemented by 12 CFR 223.2(a) (Regulation W);

(ii) The bank's or savings association's operating subsidiaries;

(iii) Edge Act or Agreement Corporation subsidiaries; or

(iv) Any other subsidiary consolidated with the bank or savings association under Generally Accepted Accounting Principles (GAAP).

(2) The lending limits in this part are separate and independent from the investment limits prescribed by 12 U.S.C. 24 (Seventh) or 12 U.S.C. 1464(c), as applicable, and 12 CFR parts 1 and 160.30, and a national bank or savings association may make loans or extensions of credit to one borrower up to the full amount permitted by this part and also hold eligible securities of the same obligor up to the full amount permitted under 12 U.S.C. 24 (Seventh) or 12 U.S.C. 1464(c), as applicable, and 12 CFR part 1 and 12 CFR 160.30.

(3) Loans and extensions of credit to executive officers, directors and principal shareholders of national banks, savings associations, and their related interests are subject to limits prescribed by 12 U.S.C. 375a and 375b in addition to the lending limits established by 12 U.S.C. 84 or 12 U.S.C. 1464(u) as applicable, and this part.

* * * * *

(d) *Temporary exception.* The requirements of this part shall not apply to the credit exposure arising from a derivative transaction or securities financing transaction until January 1, 2013.

■ 3. Section 32.2 is amended by:
■ a. Redesignating paragraphs (a) through (t) as follows:

Old paragraph(s)	New paragraph(s)
(a) through (g)	(b) through (h)
(h)	(j)
(i)	(n)
(j) through (l)	(p) through (r)
(m)	(t)
(n) and (o)	(v) and (w)
(p) and (q)	(y) and (z)
(r) through (t)	(bb) through (dd)

■ b. Adding new paragraphs (a), (i), (k), (l), (m), (o), (s), (u), (x), and (aa) to read as follows;
■ c. Revising newly designated paragraphs (b), (c), (n) introductory text, (n)(1), and (q) to read as set forth below;
■ d. In newly designated paragraphs (d) and (f) removing the word ''bank'' and adding in its place the phrase ''national bank or savings association'';
■ e. In newly designated paragraph (g):
■ i. In the introductory text, removing the word ''bank's'' and adding in its place the phrase ''national bank's or savings association's'';
■ ii. In paragraphs (g)(1)(i) and (g)(2), adding the phrase ''or savings association'' after the word ''bank''; and
■ iii. In paragraphs (g)(1)(iii) and (g)(1)(iv), removing the phrases ''paragraph (m)'' and ''paragraph (s)'' and adding in its place the phrases ''paragraph (t)'' and ''paragraph (cc)'', respectively;
■ f. In newly designated paragraph (n)(2), removing the word ''bank's'' and adding in its place the phrase ''national bank's or savings association's'';
■ g. In newly designated paragraph (p), removing the word ''banks'' and adding in its place the phrase ''national banks or savings associations''; and
■ h. In newly designated paragraph (t):
■ i. In the introductory text and paragraph (t)(1), remove the phrase ''within the bank's'' and adding in its place the phrase ''within the national bank's or savings association's'', wherever it appears;
■ ii. In paragraph (t)(1), removing the phrase ''made, the bank'' and adding in its place the phrase ''made, the bank or savings association'';
■ iii. In paragraphs (t)(1) and (2), adding after the word ''bank's'' the phrase ''or savings association's'', wherever it appears;
■ iv. In paragraph (t)(1), removing the phrase ''paragraph (k)(2)(vi)'' and adding in its place the phrase ''paragraph (q)(2)(vi); and
■ v. In the first sentence of paragraph (t)(2), removing the word ''bank'' and adding in its place the phrase ''national bank or savings association''.

The additions and revisions read as follows.

§ 32.2 Definitions.

(a) *Appropriate Federal banking agency* has the same meaning as in 12 U.S.C. 1813(q).

(b) *Borrower* means a person who is named as a borrower or debtor in a loan or extension of credit; a person to whom a national bank or savings association has credit exposure arising from a derivative transaction or a securities financing transaction, entered by the bank or savings association; or any other person, including a drawer, endorser, or guarantor, who is deemed to be a borrower under the ''direct benefit'' or the ''common enterprise'' tests set forth in § 32.5.

(c) *Capital and surplus* means—

(1) A national bank's or savings association's Tier 1 and Tier 2 capital calculated under the risk-based capital standards applicable to the institution as reported in the bank's or savings association's Consolidated Reports of Condition and Income (Call Report); plus

(2) The balance of a national bank's or savings association's allowance for loan and lease losses not included in the bank's or savings association's Tier 2 capital, for purposes of the calculation

of risk-based capital described in paragraph (c)(1) of this section, as reported in the bank's or savings association's Call Report.

* * * * *

(i) *Credit derivative* has the same meaning as this term has in 12 CFR Part 3, Appendix C, Section 2.

* * * * *

(k) *Derivative transaction* includes any transaction that is a contract, agreement, swap, warrant, note, or option that is based, in whole or in part, on the value of, any interest in, or any quantitative measure or the occurrence of any event relating to, one or more commodities, securities, currencies, interest or other rates, indices, or other assets.

(l) *Effective margining arrangement* means a master legal agreement governing derivative transactions between a bank or savings association and a counterparty that requires the counterparty to post, on a daily basis, variation margin to fully collateralize that amount of the bank's net credit exposure to the counterparty that exceeds $1 million created by the derivative transactions covered by the agreement.

(m) *Eligible credit derivative* means a single-name credit derivative or a standard, non-tranched index credit derivative provided that:

(1) The derivative contract meets the requirements of an eligible guarantee, as defined in 12 CFR part 3, Appendix C, and has been confirmed by the protection purchaser and the protection provider;

(2) Any assignment of the derivative contract has been confirmed by all relevant parties;

(3) If the credit derivative is a credit default swap, the derivative contract includes the following credit events:

(i) Failure to pay any amount due under the terms of the reference exposure, subject to any applicable minimal payment threshold that is consistent with standard market practice and with a grace period that is closely in line with the grace period of the reference exposure; and

(ii) Bankruptcy, insolvency, or inability of the obligor on the reference exposure to pay its debts, or its failure or admission in writing of its inability generally to pay its debts as they become due and similar events;

(4) The terms and conditions dictating the manner in which the derivative contract is to be settled are incorporated into the contract;

(5) If the derivative contract allows for cash settlement, the contract incorporates a robust valuation process to estimate loss with respect to the derivative reliably and specifies a reasonable period for obtaining post-credit event valuations of the reference exposure;

(6) If the derivative contract requires the protection purchaser to transfer an exposure to the protection provider at settlement, the terms of at least one of the exposures that is permitted to be transferred under the contract provides that any required consent to transfer may not be unreasonably withheld; and

(7) If the credit derivative is a credit default swap, the derivative contract clearly identifies the parties responsible for determining whether a credit event has occurred, specifies that this determination is not the sole responsibility of the protection provider, and gives the protection purchaser the right to notify the protection provider of the occurrence of a credit event.

(n) *Eligible national bank or eligible savings association* means a national bank or saving association that:

(1) Is well capitalized as defined in the prompt corrective action rules applicable to the institution; and

* * * * *

(o) *Eligible protection provider* means:

(1) A sovereign entity (a central government, including the U.S. government; an agency; department; ministry; or central bank);

(2) The Bank for International Settlements, the International Monetary Fund, the European Central Bank, the European Commission, or a multilateral development bank;

(3) A Federal Home Loan Bank;

(4) The Federal Agricultural Mortgage Corporation;

(5) A depository institution, as defined in section 3 of the Federal Deposit Insurance Act, 12 U.S.C. 1813(c);

(6) A bank holding company, as defined in section 2 of the Bank Holding Company Act, as amended, 12 U.S.C. 1841;

(7) A savings and loan holding company, as defined in section 10 of the Home Owners' Loan Act, 12 U.S.C. 1467a;

(8) A securities broker or dealer registered with the SEC under the Securities Exchange Act of 1934, 15 U.S.C. 78o et seq.;s

(9) An insurance company that is subject to the supervision of a State insurance regulator;

(10) A foreign banking organization;

(11) A non-U.S.-based securities firm or a non-U.S.-based insurance company that is subject to consolidated supervision and regulation comparable to that imposed on U.S. depository institutions, securities broker-dealers, or insurance companies; and

(12) A qualifying central counterparty;

* * * * *

(q) *Loans and extensions of credit* means a national bank's or savings association's direct or indirect advance of funds to or on behalf of a borrower based on an obligation of the borrower to repay the funds or repayable from specific property pledged by or on behalf of the borrower; and any credit exposure, as determined pursuant to § 32.9, arising from a derivative transaction or a securities financing transaction.

(1) Loans or extensions of credit for purposes of 12 U.S.C. 84 or 12 U.S.C. 1464(u), as applicable, and this part include—

(i) A contractual commitment to advance funds, as defined in paragraph (g) of this section;

(ii) A maker or endorser's obligation arising from a national bank's or savings association's discount of commercial paper;

(iii) A national bank's or savings association's purchase of third-party paper subject to an agreement that the seller will repurchase the paper upon default or at the end of a stated period. The amount of the bank's or savings association's loan is the total unpaid balance of the paper owned by the bank or savings association less any applicable dealer reserves retained by the bank or savings association and held by the bank or savings association as collateral security. Where the seller's obligation to repurchase is limited, the bank's or savings association's loan is measured by the total amount of the paper the seller may ultimately be obligated to repurchase. A national bank's or savings association's purchase of third party paper without direct or indirect recourse to the seller is not a loan or extension of credit to the seller;

(iv) An overdraft, whether or not prearranged, but not an intra-day overdraft for which payment is received before the close of business of the national bank or savings association that makes the funds available;

(v) The sale of Federal funds with a maturity of more than one business day, but not Federal funds with a maturity of one day or less or Federal funds sold under a continuing contract;

(vi) Loans or extensions of credit that have been charged off on the books of the national bank or savings association in whole or in part, unless the loan or extension of credit—

(A) Is unenforceable by reason of discharge in bankruptcy;

(B) Is no longer legally enforceable because of expiration of the statute of limitations or a judicial decision; or

(C) Is no longer legally enforceable for other reasons, provided that the bank or savings association maintains sufficient records to demonstrate that the loan is unenforceable; and

(vii) A national bank's or savings association's purchase of securities subject to an agreement that the seller will repurchase the securities at the end of a stated period, but not including a national bank's or savings association's purchase of Type I securities, as defined in part 1 of this chapter, subject to a repurchase agreement, where the purchasing bank or savings association has assured control over or has established its rights to the Type I securities as collateral.

(2) The following items do not constitute loans or extensions of credit for purposes of 12 U.S.C. 84 or 12 U.S.C. 1464(u), as applicable, and this part—

(i) Additional funds advanced for the benefit of a borrower by a national bank or savings association for payment of taxes, insurance, utilities, security, and maintenance and operating expenses necessary to preserve the value of real property securing the loan, consistent with safe and sound banking practices, but only if the advance is for the protection of the bank's or savings association's interest in the collateral, and provided that such amounts must be treated as an extension of credit if a new loan or extension of credit is made to the borrower;

(ii) Accrued and discounted interest on an existing loan or extension of credit, including interest that has been capitalized from prior notes and interest that has been advanced under terms and conditions of a loan agreement;

(iii) Financed sales of a national bank's or savings association's own assets, including Other Real Estate Owned, if the financing does not put the bank or savings association in a worse position than when the bank or savings association held title to the assets;

(iv) A renewal or restructuring of a loan as a new ''loan or extension of credit,'' following the exercise by a national bank or savings association of reasonable efforts, consistent with safe and sound banking practices, to bring the loan into conformance with the lending limit, unless new funds are advanced by the national bank or savings association to the borrower (except as permitted by § 32.3(b)(5)), or a new borrower replaces the original borrower, or unless the appropriate Federal banking agency determines that a renewal or restructuring was undertaken as a means to evade the bank's or savings association's lending limit;

(v) Amounts paid against uncollected funds in the normal process of collection; and

(vi)(A) That portion of a loan or extension of credit sold as a participation by a national bank or savings association on a nonrecourse basis, provided that the participation results in a pro rata sharing of credit risk proportionate to the respective interests of the originating and participating lenders. Where a participation agreement provides that repayment must be applied first to the portions sold, a pro rata sharing will be deemed to exist only if the agreement also provides that, in the event of a default or comparable event defined in the agreement, participants must share in all subsequent repayments and collections in proportion to their percentage participation at the time of the occurrence of the event.

(B) When an originating national bank or savings association funds the entire loan, it must receive funding from the participants before the close of business of its next business day. If the participating portions are not received within that period, then the portions funded will be treated as a loan by the originating bank or savings association to the borrower. If the portions so attributed to the borrower exceed the originating bank's or savings association's lending limit, the loan may be treated as nonconforming subject to § 32.6, rather than a violation, if:

(*1*) The originating national bank or savings association had a valid and unconditional participation agreement with a participant or participants that was sufficient to reduce the loan to within the originating bank's or savings association's lending limit;

(*2*) The participant reconfirmed its participation and the originating national bank or savings association had no knowledge of any information that would permit the participant to withhold its participation; and

(*3*) The participation was to be funded by close of business of the originating national bank's or savings association's next business day.

* * * * *

(s) *Qualifying central counterparty* has the same meaning as this term has in 12 CFR Part 3, Appendix C, Section 2.

* * * * *

(u) *Qualifying master netting agreement* has the same meaning as this term has in 12 CFR part 3, Appendix C, Section 2.

* * * * *

(x) *Residential housing units* mean:

(1) Homes (including a dwelling unit in a multi-family residential property such as a condominium or a cooperative);

(2) Combinations of homes and business property (*i.e.,* a home used in part for business);

(3) Other real estate used for primarily residential purposes other than a home (but which may include homes);

(4) Combinations of such real estate and business property involving only minor business use (*i.e.,* where no more than 20 percent of the total appraised value of the real estate is attributable to the business use);

(5) Farm residences and combinations of farm residences and commercial farm real estate;

(6) Property to be improved by the construction of such structures; or

(7) Leasehold interests in the above real estate.

* * * * *

(aa) *Securities financing transaction means* a repurchase agreement, reverse repurchase agreement, securities lending transaction, or securities borrowing transaction.

* * * * *

■ 3a. Effective January 1, 2013, § 32.2 is amended by removing newly redesignated paragraph (q)(1)(vii), removing the semicolon and the word ''and'' at the end of newly redesignated paragraph (q)(1)(vi) and adding in its place a period, and adding the word ''and'' at the end of newly redesignated paragraph (q)(1)(v).

■ 4. Section 32.3 is amended by:

■ a. In paragraphs (a) and (b) adding the phrase ''or savings association's'' after the word ''bank's'', wherever it appears;

■ b. In paragraphs (a) and (b), adding the phrase ''or savings association'' after the word ''bank'', wherever it appears;

■ c. In the first sentence of paragraph (a), removing the phrase ''in § 32.2(n)'' and adding in its place the phrase ''in § 32.2(v)'';

■ d. In paragraph (b)(1)(i), removing the phrase ''in § 32.2(o)'' and replacing it with the phrase ''in § 32.2(w)'';

■ e. In paragraph (b)(2)(i), removing the phrase ''at § 32.2(e)'' and replacing it with the phrase ''at § 32.2(f)'';

■ g. In paragraph (b)(5) introductory text, removing the phrase ''by § 32.2(m)'' and replacing it with the phrase ''by § 32.2(t);

■ h. In paragraph (c) introductory text, adding the phrase '', or 12 U.S.C. 1464(u), as applicable,'' after the phrase ''12 U.S.C. 84'';

■ i. In paragraph (c)(1)(ii), by adding the phrase ''or 12 U.S.C. 1464(u), as applicable,'' after the phrase ''12 U.S.C. 84'';

■ j. Revising paragraphs (c)(2) and (c)(3)(ii) to read as set forth below;
■ k. In the first sentence of paragraph (c)(4)(ii)(B), paragraphs (c)(5)(i), (c)(6) introductory text, (c)(9)(i), and (c)(10)(i), removing the word ''bank'', whenever it appears, and adding in its place with the phrase ''national bank or savings association'';
■ l. In paragraphs (c)(4)(ii)(B) and (c)(6)(i), adding the phrase ''or savings association's'' after the word ''bank's'';
■ m. In the second sentence of paragraph (c)(4)(ii)(B), and paragraphs (c)(5)(ii), (c)(6)(i) and (c)(6)(ii)(B), the first sentence of paragraph (c)(7), and paragraphs (c)(9)(iii) and (iv) and (c)(10)(iii) through (vi), adding the phrase ''or savings association'' after the word ''bank'' whenever it appears;
■ n. In paragraph (c)(7), removing the word ''Comptroller'', wherever it appears, and adding in its place the phrase ''appropriate Federal banking agency''; and
■ o. Adding paragraphs (c)(11). (c)(12) and (d).

The addition and revisions read as follows.

§ 32.3 Lending limits.

* * * * *

(c) * * *

(2) *Bankers' acceptances.* A national bank's or savings association's acceptance of drafts eligible for rediscount under 12 U.S.C. 372 and 373 or 12 U.S.C. 1464(c)(1)(M), as applicable, or a national bank's or savings association's purchase of acceptances created by other banks or savings associations that are eligible for rediscount under those sections; but not including—

(i) A national bank's or savings association's acceptance of drafts ineligible for rediscount (which constitutes a loan by the bank or savings association to the customer for whom the acceptance was made, in the amount of the draft);

(ii) A national bank's or savings association's purchase of ineligible acceptances created by other banks or savings associations (which constitutes a loan from the purchasing bank or savings association to the accepting bank or savings association, in the amount of the purchase price); and

(iii) A national bank's or savings association's purchase of its own acceptances (which constitutes a loan to the bank's or savings association's customer for whom the acceptance was made, in the amount of the purchase price).

(3) * * *

(ii) To qualify a loan or extension of credit under paragraph (c)(3)(i) of this section, the national bank or savings association must perfect a security interest in the collateral under applicable law.

* * * * *

(11) *Credit Exposures arising from transactions financing certain government securities.* Credit exposures arising from securities financing transactions in which the securities financed are Type I securities, as defined in 12 CFR 1.2(j), in the case of national banks, or securities listed in section 5(c)(1)(C), (D), (E), and (F) of HOLA and general obligations of a state or subdivision as listed in section 5(c)(1)(H) of HOLA, 12 U.S.C. 1464(c)(1)(C), (D), (E), (F), and (H), in the case of savings associations.

(12) *Intraday credit exposures.* Intraday credit exposures arising from a derivative transaction or securities financing transaction.

(d) *Special lending limits for savings associations.* (1) *$500,000 exception for savings associations.* If a savings association's aggregate lending limitation calculated under paragraph (a) of this section is less than $500,000, notwithstanding this limitation in paragraph (a) of this section, such savings association may have total loans and extensions of credit, for any purpose, to one borrower outstanding at one time not to exceed $500,000.

(2) *Loans by savings associations to develop domestic residential housing units.* (i) Subject to paragraph (d)(2)(ii) of this section, a savings association may make loans to one borrower to develop domestic residential housing units, not to exceed the lesser of $30,000,000 or 30 percent of the savings association's unimpaired capital and unimpaired surplus, including all loans and extensions of credit subject to paragraph (a) of this section, *provided that:*

(A) The savings association is, and continues to be, in compliance with its capital requirements under part 167 of this chapter.

(B) The appropriate Federal banking agency permits, subject to conditions it may impose, the savings association to use the higher limit set forth under this paragraph (d)(2)(i). A savings association that meets the requirements of paragraphs (d)(2)(i)(A), (C), and (D) of this section and that meets the requirements for ''expedited treatment'' under 12 CFR 116.5 or 12 CFR 390.101 may use the higher limit set forth under paragraph (d)(2)(i) if the savings association has filed a notice with the appropriate Federal banking agency that it intends to use the higher limit at least 30 days prior to the proposed use. A savings association that meets the requirements of paragraphs (d)(2)(i)(A), (C), and (D) of this section and that meets the requirements for ''standard treatment'' under 12 CFR 116.5 or 12 CFR 390.101 may use the higher limit set forth under this paragraph (d)(2)(i) if the savings association has filed an application with the appropriate Federal banking agency and the agency has approved the use the higher limit;

(C) The loans and extensions of credit made under this paragraph (d)(2)(i) of this section to all borrowers do not, in aggregate, exceed 150 percent of the savings association's unimpaired capital and unimpaired surplus;

(D) The loans and extensions of credit made under paragraph (d)(2)(i) of this section comply with the applicable loan-to-value requirements.

(ii) The authority of a savings association to make a loan or extension of credit under the exception in paragraph (d)(2)(i) of this section ceases immediately upon the association's failure to comply with any one of the requirements set forth in paragraph (d)(2)(i) of this section or any condition(s) set forth in an order issued by the appropriate Federal banking agency under paragraph (d)(2)(i)(B) of this section.

(iii) As used in this section, the term ''*to develop*'' includes each of the various phases necessary to produce housing units as an end product, such as acquisition, development and construction; development and construction; construction; rehabilitation; and conversion; and the term ''*domestic*'' includes units within the fifty states, the District of Columbia, Puerto Rico, the Virgin Islands, Guam, and the Pacific Islands.

(3) *Commercial paper and corporate debt securities.* In addition to the amount allowed under the savings association's combined general limit, a savings association may invest up to 10 percent of unimpaired capital and unimpaired surplus in the obligations of one issuer evidenced by commercial paper or corporate debt securities that are, as of the date of purchase, investment grade.

■ 5. Section 32.4 is amended by:
■ a. Revising paragraphs (a) introductory text, (a)(2), and (c) to read as set forth below;
■ b. In paragraphs (b)(1) introductory text and (b)(2), removing the word ''bank's'' and adding in its place the phrase ''national bank's or savings association's'';
■ c. In paragraphs (b)(1)(i) and (ii), adding the phrase ''or savings association's'' after the word ''bank's''.

The revisions read as follows:

§ 32.4 Calculation of lending limits.

(a) *Calculation date.* For purposes of determining compliance with 12 U.S.C. 84, and 12 U.S.C. 1464(u), as applicable, and this part, a national bank or savings association shall determine its lending limit as of the most recent of the following dates:

* * * * *

(2) The date on which there is a change in the bank's or savings association's capital category for purposes of 12 U.S.C. 1831o and 12 CFR 6.3 or 12 CFR 165.3, as applicable.

* * * * *

(c) *More frequent calculations.* If the appropriate Federal banking agency determines for safety and soundness reasons that a national bank or savings association should calculate its lending limit more frequently than required by paragraph (a) of this section, the appropriate Federal banking agency may provide written notice to the national bank or savings association directing it to calculate its lending limit at a more frequent interval, and the national bank or savings association shall thereafter calculate its lending limit at that interval until further notice.

■ 6. Section 32.5 is amended by:

■ a. In paragraphs (c)(3), (d)(1), (f)(2) introductory text, and (f)(2)(v), removing the word ''bank'', wherever it appears, and adding in its place the phrase ''national bank or savings association'';

■ b. In paragraphs (d)(1) and (f)(3)(iii), adding the phrase ''or savings association's'' after the word ''bank's'', wherever it appears;

■ c. In paragraph (c)(4), removing the word ''OCC'' and adding in its place the phrase ''appropriate Federal banking agency'';

■ d. In paragraph (f)(2)(iv), removing the phrase ''bank's'' and adding in its place the phrase ''national bank's or savings association's''; and

■ e. Revising paragraph (f)(3)(ii) introductory text.

The revision reads as follows.

§ 32.5 Combination rules.

* * * * *

(f) * * *

(3) * * *

(ii) *Qualifying restructuring.* Loans and other extensions of credit to a foreign government, its agencies, and instrumentalities will qualify for the non-combination process under paragraph (f)(3)(i) of this section only if they are restructured in a sovereign debt restructuring approved by the appropriate Federal banking agency, upon request by a national bank or savings association for application of the non combination rule. The factors that the appropriate Federal banking agency will use in making this determination include, but are not limited to, the following:

* * * * *

■ 7. Section 32.6 is revised to read as follows:

§ 32.6 Nonconforming loans and extensions of credit.

(a) A loan or extension of credit, within a national bank's or savings association's legal lending limit when made, will not be deemed a violation but will be treated as nonconforming if the loan or extension of credit is no longer in conformity with the bank's or savings association's lending limit because—

(1) The bank's or savings association's capital has declined, borrowers have subsequently merged or formed a common enterprise, lenders have merged, or the lending limit or capital rules have changed;

(2) Collateral securing the loan to satisfy the requirements of a lending limit exception has declined in value; or

(3) In the case of a credit exposure arising from a transaction identified in § 32.9(a) and measured by the Internal Model Method specified in § 32.9(b)(1)(i) or § 32.9 (c)(1)(i), the credit exposure subject to the lending limits of 12 U.S.C. 84 or 12 U.S.C. 1464(u), as applicable, or this part increases after execution of the transaction.

(b) A national bank or savings association must use reasonable efforts to bring a loan or extension of credit that is nonconforming as a result of paragraph (a)(1) or (a)(3) of this section into conformity with the bank's or savings association's lending limit unless to do so would be inconsistent with safe and sound banking practices.

(c) A national bank or savings association must bring a loan that is nonconforming as a result of circumstances described in paragraph (a)(2) of this section into conformity with the bank's or savings association's lending limit within 30 calendar days, except when judicial proceedings, regulatory actions or other extraordinary circumstances beyond the bank's or savings association's control prevent it from taking action.

■ 8. Section 32.7 is amended by:

■ a. Revising the paragraph heading;

■ b. Removing the phrase ''special lending limits'' in paragraphs (a)(5), (b) introductory text, and (e), and adding in its place the phrase ''supplemental lending limits''.

■ b. In paragraphs (a)(1), (a)(3), and (e), adding the phrase ''or savings association'' after the phrases ''a national bank'', ''a bank'', and ''the national bank'', wherever they appear;

■ c. In paragraphs (a)(1) and (a)(3), add the phrase ''or eligible savings association'' after the phrase ''eligible national bank'';

■ d. Revise paragraphs (a)(2), (b)(1), (c), and (d) to read as follows;

■ e. In paragraphs (a)(4), (a)(5), and (b)(3), adding the phrase ''or savings association's'' after the word ''bank's'', wherever it appears;

■ f. In paragraph (b) introductory text, add the phrase ''or eligible savings association'' after the word ''bank'' in the first sentence.

The revisions read as follows.

§ 32.7 Residential real estate loans, small business loans, and small farm loans (''Supplemental Lending Limits Program'').

(a) * * *

(2) In addition to the amount that a national bank or savings association may lend to one borrower under § 32.3, an eligible national bank or eligible savings association may make small business loans or extensions of credit to one borrower in the lesser of the following two amounts: 10 percent of its capital and surplus; or the percent of its capital and surplus, in excess of 15 percent, that a state bank is permitted to lend under the state lending limit that is available for small business loans or unsecured loans in the state where the main office of the national bank or home office of the savings association is located.

* * * * *

(b) * * *

(1) Certification that the bank or savings association is an ''eligible bank'' or ''eligible savings association'';

* * * * *

(c) *Duration of approval.* Except as provided in paragraph (d) of this section, a bank or savings association that has received appropriate Federal banking agency approval may continue to make loans and extensions of credit under the supplemental lending limits in paragraphs (a)(1), (2), and (3) of this section, provided the bank or savings association remains an ''eligible bank'' or ''eligible savings association.''

(d) *Discretionary termination of authority.* The appropriate Federal banking agency may rescind a bank's or savings association's authority to use the supplemental lending limits in paragraphs (a)(1), (2), and (3) of this section based upon concerns about credit quality, undue concentrations in the bank's or savings association's portfolio of residential real estate, small

business, or small farm loans, or concerns about the bank's or savings association's overall credit risk management systems and controls. The bank or savings association must cease making new loans or extensions of credit in reliance on the supplemental lending limits upon receipt of written notice from the appropriate Federal banking agency that its authority has been rescinded.

* * * * *

§ 32.8 [Amended]

■ 9. Section 32.8 is amended by:

■ a. Adding the phrase ''or savings association'' after the phrase ''national bank'' and the phrase ''or eligible savings association'' after the phrase ''eligible bank''; and

■ b. Removing the word ''OCC'', wherever it appears, and adding in its place the phrase ''appropriate Federal banking agency''.

■ 10. Section 32.9 is added to read as follows:

§ 32.9 Credit exposure arising from derivative and securities financing transactions.

(a) *Scope.* This section sets forth the rules for calculating the credit exposure arising from a derivative transaction or a securities financing transaction entered into by a national bank or savings association for purposes of determining the bank's or savings association's lending limit pursuant to 12 U.S.C. 84 or 12 U.S.C. 1464(u), as applicable, and this part.

(b) *Derivative transactions.* (1) *Non-credit derivatives.* Subject to paragraphs (b)(2) and (b)(3) of this section, a national bank or savings association shall calculate the credit exposure to a counterparty arising from a derivative transaction by one of the following methods. Subject to paragraph (b)(3) of this section, a national bank or savings association shall use the same method for calculating counterparty credit exposure arising from all of its derivative transactions.

(i) *Internal Model Method.* (A) *Credit exposure.* The credit exposure of a derivative transaction under the Internal Model Method shall equal the sum of the current credit exposure of the derivative transaction and the potential future credit exposure of the derivative transaction.

(B) *Calculation of current credit exposure.* A bank or savings association shall determine its current credit exposure by the mark-to-market value of the derivative contract. If the mark-to-market value is positive, then the current credit exposure equals that mark-to-market value. If the mark to market value is zero or negative, than the current credit exposure is zero.

(C) *Calculation of potential future credit exposure.* A bank or savings association shall calculate its potential future credit exposure by using an internal model that has been approved for purposes of 12 CFR part 3, Appendix C, Section 53, 12 CFR part 167, Appendix C, Section 53, or 12 CFR part 390, subpart Z, Appendix A, Section 53, as appropriate, or any other appropriate model approved by the appropriate Federal banking agency.

(D) *Net credit exposure.* A bank or savings association that calculates its credit exposure by using the Internal Model Method pursuant to this paragraph (b)(1)(i) may net credit exposures of derivative transactions arising under the same qualifying master netting agreement.

(ii) *Conversion Factor Matrix Method.* The credit exposure arising from a derivative transaction under the Conversion Factor Matrix Method shall equal and remain fixed at the potential future credit exposure of the derivative transaction as determined at the execution of the transaction by reference to Table 1 of this section.

TABLE 1—CONVERSION FACTOR MATRIX FOR CALCULATING POTENTIAL FUTURE CREDIT EXPOSURE [1]

Original maturity [2]	Interest rate	Foreign exchange rate and gold	Equity	Other [3] (includes commodities and precious metals except gold)
1 year or less	.015	.015	.20	.06
Over 1 to 3 years	.03	.03	.20	.18
Over 3 to 5 years	.06	.06	0.20	0.30
Over 5 to 10 years	.12	.12	0.20	.60
Over ten years	.30	.30	.20	1.0

[1] For an OTC derivative contract with multiple exchanges of principal, the conversion factor is multiplied by the number of remaining payments in the derivative contract.

[2] For an OTC derivative contract that is structured such that on specified dates any outstanding exposure is settled and the terms are reset so that the market value of the contract is zero, the remaining maturity equals the time until the next reset date. For an interest rate derivative contract with a remaining maturity of greater than one year that meets these criteria, the minimum conversion factor is 0.005.

[3] Transactions not explicitly covered by any other column in the Table are to be treated as ''Other.''

(iii) *Remaining Maturity Method.* The credit exposure arising from a derivative transaction under the Remaining Maturity Method shall equal the greater of zero or the sum of the current mark-to-market value of the derivative transaction added to the product of the notional amount of the transaction, the remaining maturity in years of the transaction, and a fixed multiplicative factor determined by reference to Table 2 of this section.

TABLE 2—REMAINING MATURITY FACTOR FOR CALCULATING CREDIT EXPOSURE

	Interest rate	Foreign exchange rate and gold	Equity	Other [1] (includes commodities and precious metals except gold)
Multiplicative Factor	1.5%	1.5%	6%	6%

[1] Transactions not explicitly covered by any other column in the Table are to be treated as ''Other.''

(2) *Credit Derivatives.* (i) Notwithstanding paragraph (b)(1) of this section, a national bank or savings association that uses the Conversion Factor Matrix Method or Remaining Maturity Method, or that uses the Internal Model Method without entering an effective margining arrangement as defined in § 32.2(l), shall calculate the counterparty credit exposure arising from credit derivatives entered by the bank or savings association by adding the net notional value of all protection purchased from the counterparty on each reference entity.

(ii) A national bank or savings association shall calculate the credit exposure to a reference entity arising from credit derivatives entered by the bank or savings association by adding the notional value of all protection sold on the reference entity. However, the bank or savings association may reduce its exposure to a reference entity by the amount of any eligible credit derivative purchased on that reference entity from an eligible protection provider.

(3) *Mandatory use of Internal Model Method.* The appropriate Federal banking agency may require a national bank or savings association to use the Internal Model Method set forth in paragraph (b)(1)(i) of this section, the Conversion Factor Matrix Method set forth in paragraph (b)(1)(ii) of this section, or the Remaining Maturity Method set forth in paragraph (b)(1)(iii) of this section to calculate the credit exposure of derivative transactions if it finds that such method is necessary to promote the safety and soundness of the bank or savings association.

(c) *Securities financing transactions.* (1) *In general.* Except as provided by paragraph (c)(2) of this section, a national bank or savings association shall calculate the credit exposure arising from a securities financing transaction by one of the following methods. A national bank or savings association shall use the same method for calculating credit exposure arising from all of its securities financing transactions.

(i) *Internal Model Method.* A national bank or savings association may calculate the credit exposure of a securities financing transaction by using an internal model approved by the appropriate Federal banking agency for purposes of 12 CFR part 3, Appendix C, Section 32(d), 12 CFR part 167, Appendix C, Section 32(d), or 12 CFR part 390, subpart Z, Appendix A, Section 32(d), as appropriate, or any other appropriate model approved by the appropriate Federal banking agency.

(ii) *Non-Model Method.* A national bank or savings association may calculate the credit exposure of a securities financing transaction as follows:

(A) *Repurchase agreement.* The credit exposure arising from a repurchase agreement shall equal and remain fixed at the market value at execution of the transaction of the securities transferred to the other party less cash received.

(B) *Securities lending.* (*1*) *Cash collateral transactions.* The credit exposure arising from a securities lending transaction where the collateral is cash shall equal and remain fixed at the market value at execution of the transaction of securities transferred less cash received.

(*2*) *Non-cash collateral transactions.* The credit exposure arising from a securities lending transaction where the collateral is other securities shall equal and remain fixed as the product of the higher of the two haircuts associated with the two securities, as determined in Table 3 of this section, and the higher of the two par values of the securities.

(C) *Reverse repurchase agreements.* The credit exposure arising from a reverse repurchase agreement shall equal and remain fixed as the product of the haircut associated with the collateral received, as determined in Table 3 of this section, and the amount of cash transferred.

(D) *Securities borrowing.* (*1*) *Cash collateral transactions.* The credit exposure arising from a securities borrowed transaction where the collateral is cash shall equal and remain fixed as the product of the haircut on the collateral received, as determined in Table 3 of this section, and the amount of cash transferred to the other party.

(*2*) *Non-cash collateral transactions.* The credit exposure arising from a securities borrowed transaction where the collateral is other securities shall equal and remain fixed as the product of the higher of the two haircuts associated with the two securities, as determined in Table 3 of this section, and the higher of the two par values of the securities.

TABLE 3—COLLATERAL HAIRCUTS

	Residual maturity	Haircut without currency mismatch [1]
SOVEREIGN ENTITIES		
OECD Country Risk Classification [2] 0–1	<= 1 year	0.005
	>1 year, <= 5 years	0.02
	5 years	0.04
OECD Country Risk Classification 2–3	<= 1 year	0.01
	>1 year, <= 5 years	0.03
	5 years	0.06
CORPORATE AND MUNICIPAL BONDS THAT ARE BANK-ELIGIBLE INVESTMENTS		
	Residual maturity for debt securities	Haircut without currency mismatch
All	<= 1 year	0.02
All	>1 year, <= 5 years	0.06
All	> 5 years	0.12
OTHER ELIGIBLE COLLATERAL		
Main index [3] equities (including convertible bonds)		0.15
Other publicly traded equities (including convertible bonds)		0.25

Mutual funds	Highest haircut applicable to any security in which the fund can invest
Cash collateral held	0

[1] In cases where the currency denomination of the collateral differs from the currency denomination of the credit transaction, an addition 8 percent haircut will apply.

[2] OECD Country Risk Classification means the country risk classification as defined in Article 25 of the OECD's February 2011 Arrangement on Officially Supported Export Credits Arrangement.

[3] Main index means the Standard & Poor's 500 Index, the FTSE All-World Index, and any other index for which the covered company can demonstrate to the satisfaction of the Federal Reserve that the equities represented in the index have comparable liquidity, depth of market, and size of bid-ask spreads as equities in the Standard & Poor's 500 Index and FTSE All-World Index.

(2) *Mandatory use of Internal Model Method.* The appropriate Federal banking agency may require a national bank or savings association to use either the Internal Model Method set forth in paragraph (c)(1)(i) of this section or the Non-Model Method set forth in paragraph (c)(1)(ii) of this section to calculate the credit exposure of securities financing transactions if the appropriate Federal banking agency finds that such method is necessary to promote the safety and soundness of the bank or savings association.

■ 11. Appendix A to part 32 is added to read as follows:

Appendix A To Part 32—Interpretations

Section 1. Interrelation of General Limitation With Exception for Loans To Develop Domestic Residential Housing Units

1. The § 32.3(d)(2) exception for loans to one borrower to develop domestic residential housing units is characterized in the regulation as an ''alternative'' limit. This exceptional $30,000,000 or 30 percent limitation does not operate in addition to the 15 percent General Limitation or the 10 percent additional amount a savings association may loan to one borrower secured by readily marketable collateral, but serves as the uppermost limitation on a savings association's lending to any one person once a savings association employs this exception.

Example: Savings Association A's lending limitation as calculated under the 15 percent General Limitation is $800, 000. If Savings Association A lends Y $800,000 for commercial purposes, Savings Association A cannot lend Y an additional $1,600,000, or 30 percent of capital and surplus, to develop residential housing units under the paragraph § 32.3(d)(2) exception. The § 32.3(d)(2) exception operates as the uppermost limitation on all lending to one borrower (for savings associations that may employ this exception) and includes any amounts loaned to the same borrower under the General Limitation. Savings Association A, therefore, may lend only an additional $800,000 to Y, provided § 32.3(d)(2) prerequisites have been met. The amount loaned under the authority of the General Limitation ($800,000), when added to the amount loaned under the exception ($800,000), yields a sum that does not exceed the 30 percent uppermost limitation ($1,600,000).

2. a. This result does not change even if the facts are altered to assume that some or all of the $800,000 amount of lending permissible under the General Limitation's 15 percent basket is not used, or is devoted to the development of domestic residential housing units.

b. In other words, using the above example, if Savings Association A lends Y $400,000 for commercial purposes and $300,000 for residential purposes—both of which would be permitted under its $800,000 General Limitation—Savings Association A's remaining permissible lending to Y would be: first, an additional $100,000 under the General Limitation, and then another $800,000 to develop domestic residential housing units if the savings association meets the paragraph § 32.3(d)(2) prerequisites. (The latter is $800,000 because in no event may the total lending to Y exceed 30 percent of unimpaired capital and unimpaired surplus). If Savings Association A did not lend Y the remaining $100,000 permissible under the General Limitation, its permissible loans to develop domestic residential housing units under § 32.3(d)(2) would be $900,000 instead of $800,000 (the total loans to Y would still equal $1,600,000).

3. In short, under the § 32.3(d)(2) exception, the 30 percent or $30,000,000 limit will always operate as the uppermost limitation, unless the savings association does not avail itself of the exception and merely relies upon its General Limitation.

Section 2. Interrelationship Between the General Limitation and the 150 Percent Aggregate Limit on Loans to All Borrowers To Develop Domestic Residential Housing Units

Numerous questions have been received regarding the allocation of loans between the different lending limit ''baskets,'' *i.e.,* the 15 percent General Limitation basket and the 30 percent Residential Development basket. In general, the inquiries concern the manner in which a savings association may ''move'' a loan from the General Limitation basket to the Residential Development basket. The following example is intended to provide guidance:

Example: Savings Association A's General Limitation under § 32.3(a) is $15 million. In January, Savings Association A makes a $10 million loan to Borrower to develop domestic residential housing units. At the time the loan was made, Savings Association A had not received approval under an order issued by the appropriate Federal banking agency to avail itself of the residential development exception to lending limits. Therefore, the $10 million loan is made under Savings Association A's General Limitation.

2. In June, Savings Association A receives authorization to lend under the Residential Development exception. In July, Savings Association A lends $3 million to Borrower to develop domestic residential housing units. In August, Borrower seeks an additional $12 million commercial loan from Savings Association A. Savings Association A cannot make the loan to Borrower, however, because it already has an outstanding $10 million loan to Borrower that counts against Savings Association A's General Limitation of $15 million. Thus, Savings Association A may lend only up to an additional $5 million to Borrower under the General Limitation.

3. However, Savings Association A may be able to reallocate the $10 million loan it made to Borrower in January to its Residential Development basket provided that: (1) Savings Association A has obtained authority under an order issued by the appropriate Federal banking agency to avail itself of the additional lending authority for residential development and maintains compliance with all prerequisites to such lending authority; (2) the original $10 million loan made in January constitutes a loan to develop domestic residential housing units as defined; and (3) the housing unit(s) constructed with the funds from the January loan remain in a stage of ''development'' at the time Savings Association A reallocates the loan to the domestic residential housing basket. The project must be in a stage of acquisition, development, construction, rehabilitation, or conversion in order for the loan to be reallocated.

4. If Savings Association A is able to reallocate the $10 million loan made to Borrower in January to its Residential Development basket, it may make the $12 million commercial loan requested by Borrower in August. Once the January loan is reallocated to the Residential Development basket, however, the $10 million loan counts towards Savings Association A's 150 percent aggregate limitation on loans to all borrowers under the residential development basket (§ 32.3(d)(2)).

5. If Savings Association A reallocates the January loan to its domestic residential housing basket and makes an additional $12 million commercial loan to Borrower, Savings Association A's totals under the respective limitations would be: $12 million under the General Limitation; and $13 million under the Residential Development limitation. The full $13 million residential development loan counts toward Savings Association A's aggregate 150 percent limitation.

PART 159—SUBORDINATE ORGANIZATIONS

■ 12. The authority citation for part 159 continues to read as follows:

Authority: 12 U.S.C. 1462, 1462a, 1463, 1464, 1828, 5412(b)(2)(B).

§ 159.3 [Amended]

■ 13. Section 159.3 is amended, in paragraph (k) introductory text, by removing ''§ 160.93 of this chapter'' and adding in its place the phrase ''12 CFR part 32''.

PART 160—LENDING AND INVESTMENTS

■ 14. The authority citation for part 160 continues to read as follows:

Authority: 12 U.S.C. 1462, 1462a, 1463, 1464, 1467a, 1701j–3, 1828, 3803, 3806, 5412(b)(2)(B); 42 U.S.C. 4106.

§ 160.40 [Amended]

■ 15. Section 160.40 is amended, in paragraph (a)(3), by removing ''§ 160.93(c) of this part'' and adding in its place the phrase ''§ 32.3(a) of this chapter''.

§ 160.60 [Amended]

■ 16. Section 160.60 is amended, in paragraph (b)(3), by removing ''§§ 160.93 and 163.43 of this chapter'' and adding in its place the phrase ''12 CFR part 32 and § 163.43 of this chapter''.

§ 160.93 [Amended]

■ 17. Section 160.93 is removed.

Dated: June 14, 2012.

Thomas J. Curry,

Comptroller of the Currency.

[FR Doc. 2012–15004 Filed 6–20–12; 8:45 am]

BILLING CODE 4810–33–P

FARM CREDIT ADMINISTRATION

12 CFR Part 618

RIN 3052–AC66

General Provisions; Operating and Strategic Business Planning; Effective Date

AGENCY: Farm Credit Administration.

ACTION: Notice of effective date.

SUMMARY: The Farm Credit Administration (FCA or Agency), through the FCA Board (Board), issued a final rule under part 618 on May 1, 2012 (77 FR 25577) amending our regulations to require the board of directors of each Farm Credit System institution to adopt an operational and strategic business plan to include, among other things, outreach toward diversity and inclusion. In accordance with 12 U.S.C. 2252, the effective date of the final rule is 30 days from the date of publication in the **Federal Register** during which either or both Houses of Congress are in session. Based on the records of the sessions of Congress, the effective date of the regulations is June 18, 2012.

DATES: *Effective Date:* Under the authority of 12 U.S.C. 2252, the regulation amending 12 CFR part 618 published on May 1, 2011 (77 FR 25577) is effective June 18, 2012.

FOR FURTHER INFORMATION CONTACT: Jacqueline R. Melvin, Policy Analyst, Office of Regulatory Policy, Farm Credit Administration, McLean, Virginia 22102–5090, (703) 883–4498, TTY (703) 883–4434, or Jennifer A. Cohn, Senior Counsel, Office of General Counsel, Farm Credit Administration, McLean, Virginia 22102–5090, (703) 883–4020, TTY (703) 883–4020.

(12 U.S.C. 2252(a)(9) and (10))

Dated: June 18, 2012.

Dale L. Aultman,

Secretary, Farm Credit Administration Board.

[FR Doc. 2012–15197 Filed 6–20–12; 8:45 am]

BILLING CODE 6705–01–P

DEPARTMENT OF TRANSPORTATION

Federal Aviation Administration

14 CFR Part 39

[Docket No. FAA–2012–0057; Directorate Identifier 2012–NE–04–AD; Amendment 39–17100; AD 2012–12–20]

RIN 2120–AA64

Airworthiness Directives; Turbomeca S.A. Turboshaft Engines

AGENCY: Federal Aviation Administration (FAA), DOT.

ACTION: Final rule.

SUMMARY: We are adopting a new airworthiness directive (AD) for Turbomeca S.A. Arriel 2C1, 2C2, and 2S2 turboshaft engines. This AD requires replacement of affected digital engine control units (DECUs). This AD was prompted by a report of a helicopter experiencing a DECU malfunction during flight. We are issuing this AD to prevent loss of automatic control on one or both engines installed on the same helicopter, which could result in an uncommanded in-flight engine shutdown, forced autorotation landing, or accident.

DATES: This AD becomes effective July 26, 2012.

ADDRESSES: The Docket Operations office is located at Docket Management Facility, U.S. Department of Transportation, 1200 New Jersey Avenue SE., West Building Ground Floor, Room W12–140, Washington, DC 20590–0001.

FOR FURTHER INFORMATION CONTACT: Rose Len, Aerospace Engineer, Engine Certification Office, FAA, Engine & Propeller Directorate, 12 New England Executive Park, Burlington, MA 01803; phone: 781–238–7772; fax: 781–238–7199; email: *rose.len@faa.gov.*

SUPPLEMENTARY INFORMATION:

Discussion

We issued a notice of proposed rulemaking (NPRM) to amend 14 CFR part 39 to include an AD that would apply to the specified products. That NPRM was published in the **Federal Register** on February 21, 2012 (77 FR 9874). That NPRM proposed to correct an unsafe condition for the specified products. European Aviation Safety Agency AD 2011–0249 states:

> An incident has been reported of a helicopter which experienced a Digital Engine Control Unit (DECU) malfunction in flight from one of its Arriel 2C1 engines. The indicating system of the helicopter displayed a ''FADEC FAIL'' message, with a concurrent loss of automatic control of the engine. The mission was aborted and the helicopter returned to its base without any further incident.
>
> The subsequent technical investigations carried out by Turbomeca revealed that a Digital Engine Control Unit (DECU) assembly non-conformity was at the origin of this event. Further investigations performed with the supplier of the DECU led to the conclusion that only a limited number of DECU are potentially affected by the non-conformity.

Comments

We gave the public the opportunity to participate in developing this AD. We received no comments on the NPRM (77 FR 9874, February 21, 2012).

Conclusion

We reviewed the available data and determined that air safety and the public interest require adopting the AD as proposed.

Costs of Compliance

Based on the service information, we estimate that this AD will affect about two engines installed on helicopters of U.S. registry. We also estimate that it will take about one work-hour per engine to comply with this AD. The average labor rate is $85 per work-hour. Required parts will cost about $12,551 per engine. Based on these figures, we estimate the cost of the AD on U.S. operators to be $25,272. Our cost estimate is exclusive of possible warranty coverage.

Authority for This Rulemaking

Title 49 of the United States Code specifies the FAA's authority to issue

rules on aviation safety. Subtitle I, section 106, describes the authority of the FAA Administrator. ''Subtitle VII: Aviation Programs,'' describes in more detail the scope of the Agency's authority.

We are issuing this rulemaking under the authority described in ''Subtitle VII, Part A, Subpart III, Section 44701: General requirements.'' Under that section, Congress charges the FAA with promoting safe flight of civil aircraft in air commerce by prescribing regulations for practices, methods, and procedures the Administrator finds necessary for safety in air commerce. This regulation is within the scope of that authority because it addresses an unsafe condition that is likely to exist or develop on products identified in this rulemaking action.

Regulatory Findings

We determined that this AD will not have federalism implications under Executive Order 13132. This AD will not have a substantial direct effect on the States, on the relationship between the national government and the States, or on the distribution of power and responsibilities among the various levels of government.

For the reasons discussed above, I certify this AD:

1. Is not a ''significant regulatory action'' under Executive Order 12866;

2. Is not a ''significant rule'' under the DOT Regulatory Policies and Procedures (44 FR 11034, February 26, 1979); and

3. Will not have a significant economic impact, positive or negative, on a substantial number of small entities under the criteria of the Regulatory Flexibility Act.

We prepared a regulatory evaluation of the estimated costs to comply with this AD and placed it in the AD docket.

Examining the AD Docket

You may examine the AD docket on the Internet at *http://www.regulations.gov;* or in person at the Docket Operations office between 9 a.m. and 5 p.m., Monday through Friday, except Federal holidays. The AD docket contains this AD, the regulatory evaluation, any comments received, and other information. The street address for the Docket Operations office (phone: (800) 647–5527) is provided in the **ADDRESSES** section. Comments will be available in the AD docket shortly after receipt.

List of Subjects in 14 CFR Part 39

Air transportation, Aircraft, Aviation safety, Incorporation by reference, Safety.

Adoption of the Amendment

Accordingly, under the authority delegated to me by the Administrator, the FAA amends 14 CFR part 39 as follows:

PART 39—AIRWORTHINESS DIRECTIVES

■ 1. The authority citation for part 39 continues to read as follows:

Authority: 49 U.S.C. 106(g), 40113, 44701.

§ 39.13 [Amended]

■ 2. The FAA amends § 39.13 by adding the following new AD:

2012–12–20 Turbomeca S.A.: Amendment 39–17100; Docket No. FAA–2012–0057; Directorate Identifier 2012–NE–04–AD.

(a) Effective Date

This airworthiness directive (AD) becomes effective July 26, 2012.

(b) Affected ADs

None.

(c) Applicability

This AD applies to Turbomeca S.A. Arriel 2C1, 2C2, and 2S2 turboshaft engines with any of the digital engine control units (DECUs) listed in Table 1 of this AD installed.

TABLE 1—SERIAL NUMBERS OF AFFECTED DECUS

529	558	560	655
696	869	878	939
983	1039	1050	1052
1150	1195	1208	1236
1302	1304	1329	1330
1350	1384	1408	1412
1416	1429	1430	1440
1464	1468	1472	1499
1508	1528	1557	1558
1560	1567	1578	1615
1616	1656	1689	N/A

(d) Reason

This AD was prompted by a report of a helicopter experiencing a DECU malfunction during flight. We are issuing this AD to prevent loss of automatic control on one or both engines installed on the same helicopter, which could result in an uncommanded in-flight engine shutdown, forced autorotation landing, or accident.

(e) Actions and Compliance

Unless already done, do the following actions.

(1) For any helicopter fitted with two DECUs listed in Table 1 of this AD:

(i) Within 50 engine hours after the effective date of this AD, replace one of the two DECUs with a DECU that is not listed in Table 1 of this AD.

(ii) Within 1,000 engine hours or 12 months after the effective date of this AD, whichever occurs first, replace the other DECU with a DECU that is not listed in Table 1 of this AD.

(2) For any helicopter fitted with one DECU listed in Table 1 of this AD, within 1,000 engine hours or 12 months after the effective date of this AD, whichever occurs first, replace the DECU with a DECU that is not listed in Table 1 of this AD.

(f) Installation Prohibition

From the effective date of this AD, do not install a DECU listed in Table 1 of this AD onto any engine, and do not install any engine having a DECU listed in Table 1 of this AD, onto a helicopter.

(g) Alternative Methods of Compliance (AMOCs)

The Manager, Engine Certification Office, may approve AMOCs for this AD. Use the procedures found in 14 CFR 39.19 to make your request.

(h) Related Information

(1) For more information about this AD, contact Rose Len, Aerospace Engineer, Engine Certification Office, FAA, Engine & Propeller Directorate, 12 New England Executive Park, Burlington, MA 01803; phone: 781–238–7772; fax: 781–238–7199; email: *rose.len@faa.gov.*

(2) Refer to European Aviation Safety Agency AD 2011–0249, dated December 22, 2011, and Turbomeca Alert Mandatory Service Bulletin No. A292 73 2845, Version A, dated December 19, 2011, for related information.

(3) For service information identified in this AD, contact Turbomeca, 40220 Tarnos, France; phone: 33 05 59 74 40 00; fax: 33 05 59 74 45 15. You may review copies of the referenced service information at the FAA, Engine & Propeller Directorate, 12 New England Executive Park, Burlington, MA. For information on the availability of this material at the FAA, call 781–238–7125.

(i) Material Incorporated by Reference

None.

Issued in Burlington, Massachusetts, on June 14, 2012.

Colleen M. D'Alessandro,

Manager, Engine & Propeller Directorate, Aircraft Certification Service.

[FR Doc. 2012–15182 Filed 6–20–12; 8:45 am]

BILLING CODE 4910–13–P

DEPARTMENT OF LABOR

Office of Workers' Compensation Programs

20 CFR Parts 701, 702, 703, 725, and 726

RIN 1240–AA05

Technical Amendments

AGENCY: Office of Workers' Compensation Programs, Labor.

ACTION: Final rule.

SUMMARY: The Office of Workers' Compensation Programs is making

technical amendments to reflect the dissolution of the Employment Standards Administration and the Secretary's delegation of authority to administer the Longshore and Harbor Workers' Compensation Act (and its extensions) and the Black Lung Benefits Act to the Director, Office of Workers' Compensation Programs. The amendments also add and update Internet addresses, and update cross-references to other regulations.

DATES: Effective June 21, 2012.

FOR FURTHER INFORMATION CONTACT: Gary Steinberg, Acting Director, Office of Workers' Compensation Programs, U.S. Department of Labor, Room S–3524, 200 Constitution Avenue NW., Washington, DC 20210. *Telephone:* (202) 693–0031 (this is not a toll-free number). TTY/TDD callers may dial toll free 1–800–877–8339 for further information.

SUPPLEMENTARY INFORMATION:

I. Background of This Rulemaking

Prior to November 8, 2009, the Secretary of Labor had delegated her statutory authority to administer the Longshore and Harbor Workers' Compensation Act and its extensions (LHWCA) and the Black Lung Benefits Act (BLBA) to the Assistant Secretary for the Employment Standards Administration (ESA). Secretary's Order 13–71, 36 FR 8755 (May 12, 1971). The Assistant Secretary, in turn, delegated authority to administer both programs to the Office of Workers' Compensation Programs (OWCP), one of ESA's sub-agencies.

On November 8, 2009, the Secretary dissolved ESA into its constituent components. *See* Secretary's Order 10–2009, 74 FR 58834 (Nov. 13, 2009). The Secretary then delegated her authority to administer the LHWCA and the BLBA directly to the Director, OWCP. *Id.*

To reflect this transfer of administrative authority, the Secretary issued a final rule changing the heading of 20 CFR chapter VI, which contains regulations implementing the LHWCA and the BLBA, from ''Employment Standards Administration'' to ''Office of Workers' Compensation Programs.'' 75 FR 63379 (Oct. 15, 2010).

Numerous references to ESA remain in the regulatory text published in 20 CFR chapter VI. On January 18, 2011, the President issued Executive Order 13563, 76 FR 3821, calling upon agencies to review existing regulations and to revise outmoded provisions. In accordance with the Executive Order, this rule updates the regulations to reflect the Department's current organizational structure. The rule deletes all references to ESA and ensures that the regulations, in all respects, reflect that OWCP is the agency empowered to administer the LHWCA and the BLBA. The revisions do not change any substantive rule governing administration of these statutes.

ESA's dissolution has also necessitated revising several Internet addresses in these regulations, which previously included references to ESA in their URLs. This rule updates all Internet addresses in this chapter. In addition, this rule updates cross-references to other sections within Title 20 to correspond to changes in those other sections.

II. Statutory Authority

Section 39(a) of the LHWCA (33 U.S.C. 939(a)) and sections 411(b), 422(a), and 426(a) of the BLBA (30 U.S.C. 921(b), 932(a), and 936(a)) authorize the Secretary of Labor to prescribe rules and regulations necessary for the administration and enforcement of the LHWCA and the BLBA.

III. Rulemaking Analyses

Administrative Procedure Act

The Department has not published a notice of proposed rulemaking for this rule. Under Administrative Procedure Act (APA) section 553(b)(A), 5 U.S.C. 553(b)(A), the Department finds that this rule is exempt from notice and comment rulemaking requirements because these revisions involve rules of agency organization, procedure, or practice. In addition, the Department finds good cause under APA section 553(b)(B), 5 U.S.C. 553(b)(B), to publish this rule without notice and comment procedures because the rule only reflects the delegation of administrative authority within the Department and makes minor clerical updates, and does not alter any substantive standard. For these same reasons, the Department finds that good cause exists for making the rule effective upon publication under APA section 553(d)(3), 5 U.S.C. 553(d)(3).

Regulatory Flexibility Act

This rule is not subject to the regulatory flexibility provisions of the Regulatory Flexibility Act (5 U.S.C. 601 *et seq.*) because it is not subject to the APA's proposed rulemaking requirements.

Congressional Review Provisions of the Small Business Regulatory Enforcement Fairness Act (SBREFA)

This rule is not classified as a ''rule'' under SBREFA, because it is a rule pertaining to agency organization, procedure, or practice that does not substantially affect the right of non-agency parties (*see* 5 U.S.C. 804(3)(C)).

Unfunded Mandates Reform Act

This rule is not subject to sections 202 or 205 of the Unfunded Mandates Reform Act (UMRA, 2 U.S.C. 1501 *et seq.*) because it is not subject to the APA's proposed rulemaking requirements. In addition, this action does not significantly or uniquely affect small governments or impose a significant intergovernmental mandate as described in sections 203 and 204 of the UMRA.

Paperwork Reduction Act

This rule does not impose an information collection burden under the provisions of the Paperwork Reduction Act (44 U.S.C. 3501 *et seq.*).

Executive Order 12866

This rule is not a ''significant regulatory action'' and is therefore not subject to review by the Office of Management and Budget under Executive Order 12866 (58 FR 51735).

Executive Order 13132 (Federalism)

The Department has reviewed this rule in accordance with Executive Order 13132 (64 FR 43255) regarding federalism, and has determined that it does not have ''federalism implications.'' The rule will not ''have substantial direct effects on the States, on the relationship between the national government and the States, or on the distribution of power and responsibilities among the various levels of government.''

Executive Order 12988 (Civil Justice Reform)

This rule meets the applicable standards in sections 3(a) and 3(b)(2) of Executive Order 12988, Civil Justice Reform (61 FR 4729), to minimize litigation, eliminate ambiguity, and reduce burden.

List of Subjects

20 CFR Part 701

Longshore and harbor workers, Organization and functions (Government agencies), Workers' compensation.

20 CFR Part 702

Administrative practice and procedure, Claims, Health care, Health professions, Longshore and harbor workers, Reporting and recordkeeping requirements, Vocational rehabilitation, Whistleblowing, Workers' compensation.

20 CFR Part 703

Insurance companies, Longshore and harbor workers, Reporting and recordkeeping requirements, Workers' compensation.

20 CFR Part 725

Administrative practice and procedure, Black lung benefits, Claims, Health care, Reporting and recordkeeping requirements, Vocational rehabilitation, Workers' compensation.

20 CFR Part 726

Black lung benefits, Insurance companies, Reporting and recordkeeping requirements, Workers' compensation.

For the reasons set forth in the preamble, amend 20 CFR parts 701, 702, 703, 725, and 726 as follows:

PART 701—GENERAL; ADMINISTERING AGENCY; DEFINITIONS AND USE OF TERMS

■ 1. The authority citation for Part 701 is revised to read as follows:

Authority: 5 U.S.C. 301, 8171 *et seq.;* 33 U.S.C. 939; 36 D.C. Code 501 *et seq.;* 42 U.S.C. 1651 *et seq.;* 43 U.S.C. 1333; Reorganization Plan No. 6 of 1950, 15 FR 3174, 3 CFR, 1949–1953 Comp., p. 1004, 64 Stat. 1263; Secretary's Order 10–2009, 74 FR 58834.

■ 2. In § 701.301, remove and reserve paragraph (a)(3), and revise the first sentence of paragraph (a)(5) to read as follows:

§ 701.301 Definitions and use of terms.

(a) * * *

(3) [Reserved]

(4) * * *

(5) *Office of Workers' Compensation Programs* or *OWCP* or *the Office* means the Office of Workers' Compensation Programs, referred to in § 701.201.

* * *

* * * * *

PART 702—ADMINISTRATION AND PROCEDURE

■ 3. The authority citation for Part 702 is revised to read as follows:

Authority: 5 U.S.C. 301, 8171 *et seq.;* 33 U.S.C. 939; 36 D.C. Code 501 *et seq.;* 42 U.S.C. 1651 *et seq.;* 43 U.S.C. 1333; Reorganization Plan No. 6 of 1950, 15 FR 3174, 3 CFR 1949–1953, Comp., p. 1004, 64 Stat. 1263; Secretary's Order 10–2009, 74 FR 58834.

■ 4. Revise the second sentence of § 702.413 to read as follows:

§ 702.413 Fees for medical services; prevailing community charges.

* * * Where a dispute arises concerning the amount of a medical bill, the Director shall determine the prevailing community rate using the OWCP Medical Fee Schedule (as described in 20 CFR 10.805 *through 10.810*) to the extent appropriate, and where not appropriate, may use other state or federal fee schedules. * * *

■ 5. Revise § 702.414(a)(1)(iv) to read as follows:

§ 702.414 Fees for medical services; unresolved disputes on prevailing charges.

(a) * * *

(1) * * *

(iv) the provider or service is not one covered by the OWCP fee schedule as described by 20 CFR 10.805 *through 10.810.*

* * * * *

PART 703—INSURANCE REGULATIONS

■ 6. The authority citation for Part 703 is revised to read as follows:

Authority: 5 U.S.C. 301, 8171 *et seq.;* 31 U.S.C. 9701; 33 U.S.C. 939; 36 D.C. Code 501 *et seq.;* 42 U.S.C. 1651 *et seq.;* 43 U.S.C. 1333; Reorganization Plan No. 6 of 1950, 15 FR 3174; 3 CFR, 1949–1953 Comp., p. 1004, 64 Stat. 1263; Secretary's Order 10–2009, 74 FR 58834.

■ 7. Revise § 703.2(b) to read as follows:

§ 703.2 Forms.

* * * * *

(b) Copies of the forms listed in this section are available for public inspection at the Office of Workers' Compensation Programs, U.S. Department of Labor, Washington, DC 20210. They may also be obtained from OWCP district offices and on the Internet at *http://www.dol.gov/owcp/dlhwc.*

■ 8. Revise the first sentence of § 703.202(b) to read as follows:

§ 703.202 Identification of significant gaps in State guaranty fund coverage for LHWCA obligations.

* * * * *

(b) OWCP will identify States without guaranty funds and States with guaranty funds that do not fully and immediately secure LHWCA obligations and will post its findings on the Internet at *http://www.dol.gov/owcp/dlhwc.* * * *

■ 9. Revise § 703.203(a)(1) to read as follows:

§ 703.203 Application for security deposit determination; information to be submitted; other requirements.

(a) * * *

(1) Any carrier seeking an exemption from the security deposit requirements based on its financial standing (*see* § 703.204(c)(1)) must submit documentation establishing the carrier's current rating and its rating for the immediately preceding year from each insurance rating service designated by the Branch and posted on the Internet at *http://www.dol.gov/owcp/dlhwc.*

* * * * *

■ 10. Revise § 703.204(c)(1) to read as follows:

§ 703.204 Decision on insurance carrier's application; minimum amount of deposit.

* * * * *

(c) * * *

(1) Carriers who hold the highest rating awarded by each of the three insurance rating services designated by the Branch and posted on the Internet at *http://www.dol.gov/owcp/dlhwc* for both the current rating year and the immediately preceding year will not be required to deposit security.

* * * * *

PART 725—CLAIMS FOR BENEFITS UNDER PART C OF TITLE IV OF THE FEDERAL MINE SAFETY AND HEALTH ACT, AS AMENDED

■ 11. The authority citation for Part 725 is revised to read as follows:

Authority: 5 U.S.C. 301, Reorganization Plan No. 6 of 1950, 15 FR 3174; 30 U.S.C. 901 *et seq.,* 902(f), 921, 932, 936; 33 U.S.C. 901 *et seq.,* 42 U.S.C. 405; Secretary's Order 10–2009, 74 FR 58834.

■ 12. Revise § 725.101(a)(17) to read as follows:

§ 725.101 Definition and use of terms.

(a) * * *

(17) *Division* or *DCMWC* means the Division of Coal Mine Workers' Compensation in the OWCP, United States Department of Labor.

* * * * *

PART 726—BLACK LUNG BENEFITS; REQUIREMENTS FOR COAL MINE OPERATOR'S INSURANCE

■ 13. The authority citation for Part 726 is revised to read as follows:

Authority: 5 U.S.C. 301; 30 U.S.C. 901 *et seq.,* 902(f), 925, 932, 933, 934, 936; 33 U.S.C. 901 *et seq.;* Reorganization Plan No. 6 of 1950, 15 FR 3174; Secretary's Order 10–2009, 74 FR 58834.

■ 14. Revise § 726.6 to read as follows:

§ 726.6 The Office of Workers' Compensation Programs.

The Office of Workers' Compensation Programs (hereinafter the Office or OWCP) is that division of the U.S. Department of Labor which has been empowered by the Secretary of Labor to carry out his or her functions under section 415 and part C of title IV of the Act. As noted throughout this part 726

the Office shall perform a number of functions with respect to the regulation of both the self-insurance and commercial insurance programs. All correspondence with or submissions to the Office should be addressed as follows: Division of Coal Mine Workers' Compensation, Office of Workers' Compensation Programs, U.S. Department of Labor, Washington, DC 20210.

■ 15. Revise § 726.301(a) to read as follows:

§ 726.301 Definitions.

* * * * *

(a) *Division Director* means the Director, Division of Coal Mine Workers' Compensation, Office of Workers' Compensation Programs, or such other official authorized by the Division Director to perform any of the functions of the Division Director under this subpart.

* * * * *

■ 16. Revise the second sentence of § 726.307(a) to read as follows:

§ 726.307 Form of notice of contest and request for hearing.

(a) * * * The notice of contest shall be made in writing to the Director, Division of Coal Mine Workers' Compensation, Office of Workers' Compensation Programs, United States Department of Labor. * * *

* * * * *

Signed at Washington, DC, this the 12th day of June 2012.

Gary Steinberg,

Acting Director, Office of Workers' Compensation Programs.

[FR Doc. 2012–15029 Filed 6–20–12; 8:45 am]

BILLING CODE 4510–CF–P

DEPARTMENT OF THE TREASURY

Alcohol and Tobacco Tax and Trade Bureau

27 CFR Parts 40, 41, 44, and 45

[Docket No. TTB–2009–0002; T.D. TTB–104; Re: T.D. TTB–78, Notice No. 95 and Notice No. 98; T.D. TTB–80; T.D. TTB–81 and Notice No. 99]

RIN 1513–AB72

Implementation of Statutory Amendments Requiring the Qualification of Manufacturers and Importers of Processed Tobacco and Other Amendments Related to Permit Requirements, and the Expanded Definition of Roll-Your-Own Tobacco

AGENCY: Alcohol and Tobacco Tax and Trade Bureau, Treasury.

ACTION: Final rule; Treasury decision.

SUMMARY: The Alcohol and Tobacco Tax and Trade Bureau is making permanent, with some changes, temporary regulatory amendments promulgated in response to certain changes that the Children's Health Insurance Program Reauthorization Act of 2009 made to the tobacco provisions of the Internal Revenue Code of 1986. The regulatory amendments adopted in this final rule include permit and related requirements for manufacturers and importers of processed tobacco, requirements for manufacturers of tobacco products who also manufacture processed tobacco, and regulations related to the expansion of the definition of roll-your-own tobacco.

DATES: Effective June 21, 2012, the temporary regulations published in the **Federal Register** at 74 FR 29401 on June 22, 2009, at 74 FR 37551 on July 29, 2009, and at 74 FR 48650 on September 24, 2009 are adopted as final, and these regulations will no longer have a sunset date of June 22, 2012. The amendments to 27 CFR parts 40 and 41 contained in this rule are effective June 21, 2012.

FOR FURTHER INFORMATION CONTACT: Amy Greenberg, Regulations and Rulings Division, Alcohol and Tobacco Tax and Trade Bureau 1310 G St. NW., Box 12, Washington, DC 20005; phone (202) 453–1039, ext. 099.

SUPPLEMENTARY INFORMATION:

Background

TTB Authority

Chapter 52 of the Internal Revenue Code of 1986 (IRC) sets forth the Federal excise tax and related provisions that apply to manufacturers and importers of tobacco products, processed tobacco, and cigarette papers and tubes, and to export warehouse proprietors who hold such products, upon which tax has not been paid, pending export. The Alcohol and Tobacco Tax and Trade Bureau (TTB) administers chapter 52 of the IRC pursuant to section 1111(d) of the Homeland Security Act of 2002, codified at 6 U.S.C. 531(d). The Secretary has delegated various authorities through Treasury Department Order 120–01 (Revised), dated January 21, 2003, to the TTB Administrator to perform the functions and duties in the administration and enforcement of this law.

Section 5701 of the IRC (26 U.S.C. 5701) sets forth the excise tax rates that apply to domestic and imported tobacco products and cigarette papers and tubes. Section 5702 of the IRC (26 U.S.C. 5702) defines tobacco products as cigars, cigarettes, smokeless tobacco, pipe tobacco, and roll-your-own tobacco and separately defines each of these terms. That section also defines other relevant terms, such as ''manufacturer of tobacco products,'' ''importer,'' and ''export warehouse proprietor.''

Sections 5712 and 5713 of the IRC (26 U.S.C. 5712 and 5713) provide that manufacturers and importers of tobacco products and processed tobacco and export warehouse proprietors must obtain a permit to engage in such businesses. Section 5712 also allows for the promulgation of regulations to prescribe minimum manufacturing and activity requirements for such permittees. Sections 5721, 5722, and 5741 of the IRC (26 U.S.C. 5721, 5722, 5741) authorize the promulgation of regulations to require inventories, reports, and recordkeeping, respectively. Section 5723 of the IRC (26 U.S.C. 5723) includes authority to promulgate regulations regarding standards for packages, and for marks, labels, and notices on such packages of tobacco products, processed tobacco, and cigarette papers and tubes.

Regulations implementing the provisions of chapter 52 of the IRC are contained in 27 CFR parts 40 (manufacture of tobacco products, cigarette papers and tubes, and processed tobacco), 41 (importation of tobacco products, cigarette papers and tubes, and processed tobacco), 44 (exportation of tobacco products and cigarette papers and tubes, without payment of tax, or with drawback of tax), and 45 (removal of tobacco products and cigarette papers and tubes, without payment of tax, for use of the United States). These regulatory provisions are administered by TTB.

Children's Health Insurance Program Reauthorization Act of 2009

On February 4, 2009, the President signed into law the Children's Health Insurance Program Reauthorization Act of 2009, Public Law 111–3, 123 Stat. 8 (''CHIPRA''). Section 701 of CHIPRA amended the IRC to increase the Federal excise tax rates on tobacco products and cigarette papers and tubes. Section 701 also imposed a floor stocks tax on such articles held for sale on the effective date of the tax rate increases (April 1, 2009). On March 31, 2009, TTB published in the **Federal Register** (74 FR 14479) a temporary rule, T.D. TTB–75, to amend the TTB regulations to reflect the section 701 changes. On July 22, 2010, TTB published in the **Federal Register** (75 FR 42605) T.D. TTB–85 which adopted those temporary regulations as a final rule. The section 701 statutory and regulatory changes are not the subject of this document.

Section 702 of CHIPRA also made some significant changes to the IRC, some of which are reflected in the description of TTB's authority above. These changes were principally with regard to ''roll-your-own tobacco'' and ''processed tobacco.'' Section 702 amended the definition of ''roll-your-own tobacco'' in section 5702 of the IRC by including in its scope tobacco for making cigars and tobacco for use as wrappers of cigars and cigarettes. Section 702 of CHIPRA also set forth a statutory framework for regulating ''processed tobacco'' by:

- Amending section 5702 of the IRC to add a definition of ''manufacturer of processed tobacco'';
- Amending sections 5712 and 5713 of the IRC to require that manufacturers and importers of processed tobacco, like manufacturers and importers of tobacco products, apply for and obtain a permit before commencing such businesses. Section 702 included a transitional rule under which manufacturers and importers of processed tobacco who were engaged in such a business on April 1, 2009, and who file a permit application with TTB on or before June 30, 2009, could continue in business pending final TTB action on the application;
- Amending sections 5721, 5722, and 5741 to make manufacturers and importers of processed tobacco subject to the inventory, reporting, and recordkeeping regulatory authority already applicable to manufacturers and importers of tobacco products; and
- Amending section 5723 of the IRC to make processed tobacco subject to the packaging (including mark, label, and notice) regulatory authority already applicable to tobacco products and cigarette papers and tubes.

The changes made by section 702 of CHIPRA clearly brought processed tobacco within the statutory and regulatory framework administered by TTB under chapter 52 of the IRC but did not establish processed tobacco as a commodity subject to excise tax. The regulatory actions taken by TTB in response to these statutory changes are outlined below.

Publication of Temporary Regulations and Notices of Proposed Rulemaking

On June 22, 2009, TTB published in the **Federal Register** (74 FR 29401) a temporary rule, T.D. TTB–78, setting forth amendments to parts 40, 41, 44, and 45 of the TTB regulations to reflect the changes made by section 702 of CHIPRA; those temporary regulations went into effect on the date of publication. On the same day, TTB published in the **Federal Register** (74 FR 29433) a notice of proposed rulemaking, Notice No. 95, that invited comments from the public on the amendments contained in that temporary rule.

The principal regulatory changes contained in the T.D. TTB–78 temporary rule are as follows:

- Numerous provisions within parts 40, 41, and 44 were amended by the inclusion of references to ''processed tobacco'' to reflect the entry of that commodity into the regulatory framework administered by TTB.
- A new subpart L was added to part 40 and a new subpart M was added to part 41, setting forth qualification, operation, and related requirements for manufacturers and importers of processed tobacco. These provisions included permit application, recordkeeping, reporting, and minimum activity requirements. Inventory requirements also were included for manufacturers of processed tobacco.
- Definitions of ''manufacturer of processed tobacco'' and of ''processed tobacco'' were added to §§ 40.11 and 41.11 to assist in distinguishing between activities related to farming and the handling of processed tobacco, which do not fall under the regulatory provisions, and activities related to the processing of tobacco, which must be undertaken in compliance with statutory and regulatory requirements.
- The definition of ''roll-your-own tobacco'' in §§ 40.11 and 41.11 was amended to reflect the expanded definition of that term in section 5702 of the IRC, and corresponding changes were made to the notice requirements for roll-your-own tobacco specified in §§ 40.216b and 41.72b.
- In §§ 40.11 and 41.11 the definition of ''package'' was revised, and a definition of ''packaging'' was added, in order to make clear that ''processing of tobacco'' does not include placing processed tobacco in consumer packaging. A manufacturer of processed tobacco may not place processed tobacco in a consumer package because to do so would result in a product that fits the definition of a taxable commodity. Accordingly, such packaging may not occur on the premises of a person who is qualified only as a manufacturer of processed tobacco but may only be undertaken on the bonded premises of a tobacco product manufacturer.
- Sections 40.25a and 41.30, which specify the tax rates that apply to pipe tobacco and roll-your-own tobacco, were amended by the addition of standards for distinguishing between these two classes of tobacco products on the basis of their packaging and labeling, including rules under which a product is deemed to be (and thus subject to the tax rate applicable to) roll-your-own tobacco.
- The notice requirements for pipe tobacco in §§ 40.216a and 41.72a were amended by removing ''Tax Class L'' as a specified designation on a pipe tobacco package, thus leaving ''pipe tobacco'' as the only specified designation.
- The notice requirements for roll-your-own tobacco in §§ 40.216b and 41.72b were amended by removing ''Tax Class J'' as a specified designation on a roll-your-own tobacco package (thus leaving ''roll-your-own tobacco'' and ''cigarette tobacco'' as specified designations) and, to reflect the expanded definition of ''roll-your-own tobacco'' mentioned above, by adding ''cigar tobacco,'' ''cigarette wrapper,'' and ''cigar wrapper'' as specified designations.
- Sections 40.216c and 41.72c were revised to set forth a use-up period, until August 1, 2009, for the removal of pipe tobacco and roll-your-own tobacco in packages that bore the ''Tax Class L'' and ''Tax Class J'' designations.

On July 29, 2009, TTB published in the **Federal Register** (74 FR 37551) a temporary rule, T.D. TTB–80, to correct several inadvertent errors that appeared in the T.D. TTB–78 temporary rule; these corrections were effective on the date of publication. Subsequently, on August 25, 2009, TTB published in the **Federal Register** (74 FR 42812) a notice of proposed rulemaking, Notice No. 98, to reopen the comment period specified in Notice No. 95 in order to extend that comment period for an additional 60 days, that is, until October 20, 2009.

During the initial Notice No. 95 comment period, TTB received three comments requesting an extension of the package use-up period beyond the August 1, 2009, date specified in T.D. TTB–78. One commenter also pointed out that the temporary regulations set forth additional factors related to the packaging of the pipe tobacco and roll-your-own products that bears on the classification of those products, but those provisions were not subject to a use-up period in the temporary regulations. The commenter asked that TTB provide a use-up provision that applied to both the classification and the notice-related packaging provisions. On September 24, 2009, TTB published in the **Federal Register** (74 FR 48650) a temporary rule, T.D. TTB–81, which: (1) Further amended §§ 40.216c and 41.72c, discussed above, in order to extend the specified use-up period for packages bearing the ''Tax Class L'' and ''Tax Class J'' designations to March 23, 2010;

(2) amended §§ 40.25a and 41.30, discussed above, in order to delay application of the new standards for distinguishing between pipe tobacco and roll-your-own tobacco, also to March 23, 2010; and (3) corrected two minor errors of omission in the T.D. TTB–78 regulatory texts. These regulatory amendments took effect on the date of publication. Also on September 24, 2009, TTB published in the **Federal Register** (74 FR 48687) a notice of proposed rulemaking, Notice No. 99, inviting the submission of public comments, until November 23, 2009, on the additional regulatory amendments contained in T.D. TTB–81.

Discussion of Comments

Comment Overview

TTB received 19 responses to the solicitation of comments regarding the temporary regulations contained in T.D. TTB–78 and 1 response to the solicitation of comments regarding the regulatory amendments contained in T.D. TTB–81. TTB had also received 2 comments to an earlier temporary rule (T.D. TTB–75, implementing the new tax rates and floor stocks tax imposed by CHIPRA) that are relevant to the issues raised in T.D. TTB–78.

The 19 responses to the publication of T.D. TTB–78 included comments submitted by or on behalf of the following industry members, trade organizations, consulting firms, and law firms: R.J. Reynolds Tobacco Co. (R.J. Reynolds), John Middleton Co., National Tobacco Co. LP (National Tobacco), Altadis USA, Inc., Universal Leaf Tobacco Co., Inc., Schweitzer-Mauduit International, Inc. (Schweitzer-Mauduit), the Pipe Tobacco Council, Inc., Customs Advisory Services, Inc., Venable, LLP, the law offices of Barry Boren, and the companies of the Altria Group, Inc., consisting of John Middleton Co., Philip Morris USA, Inc. and U.S. Smokeless Tobacco Manufacturing Co. LLC (the Altria Group). The comment received in response to T.D. TTB–81 was submitted on behalf of the Campaign for Tobacco-Free Kids. The two comments received in response to T.D. TTB–75 and referenced below were submitted on behalf of Domestic Tobacco Co., and National Tobacco.

Two individuals submitted comments that were not pertinent to the regulations at issue and therefore are outside the scope of this final rule. One comment discussed techniques for quitting smoking and the other discussed subsidies for health insurance. These comments are not discussed further in this document. Descriptions of the remaining comments, along with TTB's responses, are set forth below, with the exception of the comments on the package use-up period that were addressed in T.D. TTB–81.

General Comments

Comment

The Altria Group commented that TTB should, in the future, consult with industry through roundtable discussions, or stakeholder meetings, prior to issuing ''this type of broad regulatory program.'' National Tobacco commented that TTB should consider establishing an advisory committee, consisting of a panel of industry experts, for providing TTB with industry input on a variety of issues, including distinguishing between pipe tobacco and other tobacco products and simplifying the recordkeeping requirements.

TTB response: Because of the short time period between enactment of CHIPRA and the effective date of its provisions, expedited adoption of the implementing regulations was necessary and precluded advanced consultation with industry. Moreover, publication of the notice inviting comments on the temporary provisions is an effective means to obtain public input to be taken into account at the final rule stage.

With regard to the suggestion that TTB set up an advisory group, TTB agrees that obtaining input from the regulated industry as well as other members of the public, prior to rulemaking, is valuable. TTB often receives and considers information from industry members, State and Federal regulators, and other interested parties, which assists in the development of policy positions. TTB is also currently evaluating additional ways of obtaining input from all interested parties beyond notice and comment rulemaking and ad hoc communications.

Specifically in regard to the distinction between pipe tobacco and roll-your-own tobacco, TTB has found that the publication of an advance notice of proposed rulemaking (Notice No. 106, 75 FR 42659, published in the **Federal Register** on July 22, 2010) and the reopening of the comment period for that rulemaking (in Notice No. 120, 76 FR 52913, published in the **Federal Register** on August 24, 2011) has been an effective method of receiving thoughtful and substantive written comments from industry members and other interested parties.

Definitions of ''Processed Tobacco,'' ''Package,'' and ''Packaging''

Comment

National Tobacco requested that TTB amend the definition of ''processed tobacco'' in §§ 40.11 and 41.11 in such a way that the permit requirement would not apply when processed tobacco is used in the flavoring industry, in ceremonial Native American and other religious activities, in chemical extractive industries, in pharmaceuticals, and in agricultural pesticides and fertilizer.

TTB response: TTB believes that the legislation is concerned with processed tobacco that could be used to make a tobacco product. At this point, TTB has no regulatory standard that would distinguish the ''processed tobacco'' that could be used to make a tobacco product from ''processed tobacco'' that could not be used to make a tobacco product. However, TTB does make a determination on a case-by-case basis, considering the particular circumstances of a processing operation and consistent with the statutory language. TTB will consider future amendments to the regulations in this matter.

Comment

R.J. Reynolds expressed concern that the definition of ''package'' treats all packages of processed tobacco weighing 10 pounds or less as a taxable product. R.J. Reynolds asserted that this does not account for the ''legitimate needs'' companies have of shipping small samples of processed tobacco and proposed that TTB amend the definitions of the terms ''package'' and ''processed tobacco'' to better accommodate such shipments. Specifically, R.J. Reynolds proposed that the second sentence of the definition of package in § 40.11 be revised to read as follows: ''For purposes of this definition, a container of processed tobacco, the contents of which weigh 10 pounds or less, that is removed within the meaning of this part *and* offered for sale or delivery to the ultimate consumer is deemed to be a taxable tobacco product as referenced with this part.'' [Emphasis in the original.] R.J. Reynolds also suggested that TTB consider package graphics (that is, markings and designations) and the way that the product is marketed and offered for sale.

TTB response: The issue R.J. Reynolds raised of shipping small samples of processed tobacco is addressed below in the recordkeeping and reporting requirements section of this comment discussion. With regard to the specific

language proposed by R.J. Reynolds, TTB believes that adopting the proposal would be problematic as it would only recognize a container as a ''package,'' and therefore, a taxable commodity, if the container is *actually* offered for sale or delivery to the consumer by the manufacturer. This would be inconsistent with the statutory language for pipe tobacco and roll-your-own tobacco which only requires that the packaging of a product make it suitable for use and *likely* to be offered to, or purchased by, consumers.

With regard to the proposal that TTB consider package graphics and marketing in determining when processed tobacco is deemed a taxable product, TTB believes that the consideration of package graphics, along with physical characteristics, is appropriate for further consideration and notice and comment in a separate rulemaking action. Setting forth specific, potentially limiting, standards for package graphics in this final rule without providing the general public, including other industry members, an opportunity to comment on such standards would not be appropriate. Similarly, how a product is marketed and offered for sale also warrants further consideration and notice and comment.

Comment

The Altria Group requested clarification of the last sentence of 27 CFR 40.61(c), which states: ''For the purposes of this section, the activity of packaging processed tobacco *may* be sufficient to qualify as a manufacturing activity.'' The emphasis was added by the commenter who asserted that this phrase is vague and discretionary, both for those who seek to obtain permits and for those who might contract with such entities for packaging services. The Altria Group expressed concern that, as written, § 40.61(c) ''could be interpreted to allow a permit for the packaging of pipe tobacco or snuff (loose tobacco that could be called processed tobacco), but not the packaging of cigarettes or cigars (clearly fashioned into an actual product).'' The commenter stated that if TTB intended for the tobacco to be considered processed tobacco until it is put into a package, then the Bureau should clarify that intent in the regulations.

TTB response: The regulatory text at § 40.61(c), as amended by T.D. TTB–78, states that the activity of packaging processed tobacco may be sufficient to qualify as a manufacturing activity, for the purposes of requiring the packager to obtain a permit as a tobacco product manufacturer. The text is not ambiguous as to whether it applies to cigars and cigarettes. It should be noted that the activity of packaging cigars and cigarettes is not sufficient to qualify a person as a manufacturer of tobacco products as both cigars and cigarettes already clearly meet all the considerations in the applicable statutory definitions (at 26 U.S.C. 5702(a) and (b), respectively) prior to their packaging. A cigar or cigarette is distinguishable as a roll of tobacco wrapped in paper, tobacco, or a substance not containing tobacco, before the products are put up in consumer packages.

Single Entities Operating Multiple Locations Under the Same Permit

Comment

Two industry members (National Tobacco and Schweitzer-Mauduit) and Customs Advisory Services Inc. suggested that TTB allow a single legal entity to operate multiple factories under a single permit for the manufacture of processed tobacco. National Tobacco argued that ''[r]equiring separate permits for each location is anachronistic in an age when central recordkeeping and global information sharing are the norm.'' National Tobacco further suggested that the ''person'' who must qualify for a permit under § 40.61(a) should refer to an individual, company, corporation, partnership, or other legal entity, rather than to a location. Schweitzer-Mauduit requested clarification of its understanding that the TTB regulations require ''one application for permit and one monthly report from each corporation that manufactures processed tobacco at more than one facility.'' R.J. Reynolds asked whether a manufacturer of tobacco products could store processed tobacco in warehouse facilities not located in the vicinity of its manufacturing facilities or whether those facilities had to be located in the vicinity of the factory. Customs Advisory Services Inc. asserted that ''[c]onfusion exists in the trade regarding the number of permits required and the tobacco reporting requirements for companies operating multiple factories for the manufacture of processed tobacco,'' and that the reporting requirements for intercompany movements of tobacco between factories and storage warehouses operated by the same legal entity are not clearly described by the regulations. The commenter recommended that the regulations be clarified to allow a single legal entity to operate multiple facilities under a single permit.

Finally, National Tobacco extended the suggestion of a single permit to cover multiple locations to also apply to manufacturers of tobacco products. Specifically, National Tobacco suggested that TTB also amend §§ 40.61 and 40.62 to allow each manufacturer of tobacco products to obtain a single permit covering multiple locations, as well as the importation of tobacco products, to eliminate any duplication of records that results from operating under multiple permits.

TTB response: The issue of allowing the permit of a manufacturer of tobacco products to cover multiple manufacturing locations and also importation is not an issue appropriate for resolution in this final rule document because it was not raised in, and goes beyond the scope of, T.D. TTB–78. With regard to the comment that a person, rather than a location, must qualify for a permit, TTB points out that the IRC at 26 U.S.C. 5712 and 5713 requires that the determination of whether an applicant is qualified to obtain a permit depends on, among other factors, consideration of the premises. In very general terms, section 5712 requires that an application for a permit be evaluated on three factors: (1) The premises upon which business will occur, (2) the proposed business activities, and (3) the person intending to engage in such business. Specifically, section 5712 provides that an application for a permit may be rejected and the permit denied if the Secretary finds that ''the premises on which it is proposed to conduct the business are not adequate to protect the revenue.'' This provision obligates TTB to evaluate the premises upon which business is proposed to be conducted in order to determine whether to issue a permit. Similarly, an existing permit may be revoked or suspended under 26 U.S.C. 5713 if the permittee has failed to maintain the premises in such manner as to protect the revenue. As a result, a permit authorizes a person to engage in business only at a specific location. The location where business may take place under the permit may be changed, where authorized under the TTB regulations, but the permit continues to be tied to a specific location under the statute.

TTB agrees with the comments that point out that TTB needs to address the activities that may be undertaken on, and the boundaries of, the physical premises delineated by the permit of a manufacturer of processed tobacco. In considering this matter, TTB reviewed the regulations that apply to the premises of manufacturers of tobacco products to determine whether and to

what extent those provisions may be appropriate to the activities of manufacturers of processed tobacco. The regulations at § 40.72(a) specifically prescribe the scope and use of a tobacco product manufacturer's premises. Under that section, the premises used by a manufacturer of tobacco products for the factory are to be used exclusively for the purposes of manufacturing and storing tobacco products; storing materials, equipment, and supplies related thereto or used or useful in the conduct of the business; and carrying on activities in connection with business of that manufacturer. Further, § 40.69 addresses premises that incorporate portions of buildings and multiple non-contiguous buildings, and when diagrams of such premises must be submitted to TTB. Under that section, the premises used by a manufacturer of tobacco products may consist of more than one building, or portions of buildings, which need not be contiguous but must be located in the same city, town, or village. Where not so located, the appropriate TTB officer may authorize the inclusion of buildings, or portions of buildings, that are so conveniently and closely situated to the general factory premises as to present no jeopardy to the revenue or hindrance to the administration of the regulations. The buildings or portions of buildings must be described in the application for permit and the regulations require the submission of a diagram in certain circumstances. If the factory premises are to be changed to an extent that will make inaccurate the description of the factory set forth in the last application, § 40.114 requires that a manufacturer of tobacco products submit an application for an amended permit before changes are made to the premises.

The current regulations described above speak to the delineation of the factory premises of a manufacturer of tobacco products but the temporary regulations do not, as the commenters point out, address issues regarding the factory premises of a manufacturer of processed tobacco. In addition, since publication of the temporary regulations, TTB has fielded a number of questions from industry members regarding whether the existing concepts applicable to the premises of manufacturers of tobacco products apply to the premises of manufacturers of processed tobacco.

TTB believes that the provisions of § 40.72(a) regarding the activities that may take place on the factory premises of a manufacturer of tobacco products are appropriate to apply to the factory premises of manufacturers of processed tobacco, with some modification. Similar to the provisions set forth for manufacturers of tobacco products, for manufacturers of processed tobacco, the premises must be used for the manufacturing and storing of, in this case, processed tobacco; storing materials, equipment, and supplies related to the processing of tobacco or used or useful in the conduct of the business; and carrying on activities in connection with business of the manufacturer of processed tobacco. Just as with the manufacturing of tobacco products, TTB believes that any activity related to the business of processing tobacco must be undertaken only on premises delineated by a TTB permit. The physical premises delineated by the permit must include all buildings or portions of buildings in which such activities take place. TTB believes that in the context of a manufacturer of taxable tobacco products, it is necessary and appropriate to require that only buildings in close proximity to the factory be included as part of the factory in which such products are manufactured. In that context, extending the factory premises to include buildings not within geographic proximity would allow for the inappropriate deferral or ''downstreaming'' of the payment of tax beyond the point of manufacture. The same consideration does not apply to processed tobacco, and in that context TTB believes that extending the factory premises to allow for it to include all buildings, even those not within geographic proximity, would allow for more efficient recordkeeping and reporting, as described in several comments, without any readily-apparent revenue or administrative burden consequence. Therefore, this final rule provides that the factory premises of a manufacturer of processed tobacco may consist of more than one building, or portions of buildings, which need not be contiguous nor must they be located in the same city, town, village, or State. The manufacturer of processed tobacco in its permit application must identify and describe all buildings or portions of buildings where any activity related to the processing of tobacco, as described under § 40.11, takes place and also where any processed tobacco is stored pending removal for transfer to another entity. The manufacturer must also designate a central location as a repository of records sufficient to incorporate all activities involved under the permit.

As a result, TTB sets forth in this final rule a new section, § 40.502, which in paragraph (a) is similar to the regulations at § 40.72 regarding what buildings and activities are to be covered by the factory premises and what location information must be submitted with the permit application. Section 40.502 differs from § 40.69 in that it provides that the buildings that make up a factory for manufacturing processed tobacco need not be within a certain proximity to each other; and, in paragraph (b), mirrors the regulations at § 40.114 regarding changes (extensions and curtailment) of factory premises. A paragraph (b) is added to require that manufacturers of processed tobacco operating under a permit issued prior to the effective date of this final rule submit the required location information within 180 days of the effective date. In addition, the requirements set forth at § 40.521 regarding the records that a manufacturer of processed tobacco must keep are amended to include records of transfers between buildings that are covered under the same permit but that are not located in the same city, town, village, or State.

TTB believes that this new section, § 40.502, provides a result consistent with that requested by the commenters, and adds clarification with regard to the point at which TTB F 5250.2 (Report of Removal, Transfer, or Sale of Processed Tobacco) must be submitted, that is, when a ''removal,'' for purposes of the reporting requirement, takes place.

Similar considerations also apply to importers of processed tobacco. Under the IRC at 26 U.S.C. 5702(k), an importer of processed tobacco is any person in the United States to whom any processed tobacco manufactured in a foreign country, Puerto Rico, the Virgin Islands, or a possession of the United States is shipped or consigned. An importer of processed tobacco may obtain release from customs custody of processed tobacco and store the tobacco until it is sold or transferred to another entity. Such a sale or transfer must be reported on TTB F 5250.2, in accordance with § 41.262(d). As a result, this final rule amends the TTB regulations at §§ 41.237 and 41.253 to specifically require that the application for a permit to be an importer of processed tobacco set forth the location to be used as the principal business office and the locations in which the importer stores processed tobacco and that any change in the designated locations be submitted to TTB as an amendment to the importer's permit. This final rule also adds a new § 41.264 to specify that the importer of processed tobacco is subject to inventory requirements at the same times as those

required of manufacturers of processed tobacco under § 40.523, that is, at the time of commencing business, at the time of transferring ownership, at the time of changing the location, at the time of concluding business, and at such other time as any appropriate TTB officer may require. These new provisions provide that an importer of processed tobacco holding a permit issued prior to the effective date of the final rule has 180 days to submit to TTB the information regarding the location and inventory now required. The recordkeeping requirements applicable to importers of processed tobacco, set forth at § 41.261, are also amended to require that the records of an importer of processed tobacco include information on transfers between buildings that are covered under the same permit but that are not located in the same city, town, village, or State.

Use of Factory Premises for Other Business

Comment

National Tobacco suggested that TTB amend 27 CFR 40.47 and 40.72 to authorize the storage and manipulation of non-tobacco smoking products such as tobacco-free herbal hookah/shisha on the premises of tobacco product manufacturers. National Tobacco commented that tobacco-free herbal hookah/shisha is typically marketed and distributed through the same channels as tobacco products, and thus is an appropriate adjunct to a line of smoking products. National Tobacco stated that TTB's regulations are not clear as to whether herbal hookah/shisha would be regarded as materials or supplies related to a permit holder's tobacco business.

TTB response: TTB believes this issue is beyond the scope of the temporary rule, as it does not relate to the CHIPRA-related regulatory changes. However, TTB notes that § 40.47(a) provides that a TTB-permitted manufacturer of tobacco products that wishes to engage in any other business on the premises of a tobacco factory may apply to TTB to do so. TTB frequently receives requests from manufacturers of tobacco products to operate varied businesses on their premises. These requests are evaluated on an individual, case-by-case basis. This process eliminates the need for TTB to amend the regulations to authorize each type of ''other business.'' The process set forth at § 40.47(a) is appropriate and adequate to address the scenario described in the comment. A specific regulatory amendment is unnecessary.

Recordkeeping and Reporting Requirements

Comment

R.J. Reynolds, Universal Leaf Tobacco Co. Inc., and Schweitzer-Mauduit all suggested that TTB consider accepting reports electronically.

TTB Response: TTB recognizes the value of accepting reports electronically, and we intend to do so as resources and logistics allow.

Comment

Altadis USA, Inc. proposed that the records required under §§ 40.182 and 40.521 should be monthly records, rather than daily records. According to the commenter, daily reconciliation of processing runs is impossible, and monthly, rather than daily, recordkeeping ''makes sense in light of current monthly reporting requirements already in place for manufacturers with respect to shipped tobacco products, and is consistent with the good business practices endorsed by TTB in the temporary rule.'' Additionally, Altadis USA, Inc. asserted that the recordkeeping requirements in §§ 40.182 and 40.521 should only apply to leaf tobacco that is received at a facility and that leaves the facility in the form of a tobacco product, or, under § 40.521, is otherwise removed from the facility. Altadis USA, Inc. stated that ''the requirements of the temporary rule will not achieve the intended result; indeed the information will be either misleading or meaningless,'' explaining in this regard that it is not technologically feasible to measure quantities of processed tobacco at every stage of the manufacturing process because no product exists during the intermediate steps of processing.

The Altria Group similarly argued that the §§ 40.182 and 40.521 daily recordkeeping requirements for manufacturers of tobacco products who also process tobacco are unduly burdensome, although, beyond that, the incremental addition of a monthly report and documentation of transfers from the permitted facility are not significantly onerous. They suggested that it would be appropriate, and would impose a more reasonable burden, to require recordkeeping for all transfers of processed tobacco from the permitted facility by the manufacturer but only require submission of the reports to TTB for shipments to unpermitted facilities. The Altria Group asserts that jeopardy to the revenue comes when processed tobacco is transferred to a nonpermitted manufacturer in an untracked manner.

According to R.J. Reynolds and National Tobacco, TTB F 5250.2 (Report of Removal, Transfer, or Sale of Processed Tobacco) imposes a significant administrative burden on industry members. To remedy this, R.J. Reynolds recommended that TTB exempt from the TTB F 5250.2 reporting requirements both shipments of processed tobacco to government agencies and export shipments of processed tobacco. Additionally, the commenter suggested that TTB change the reporting deadline in § 40.522(d) from the close of business the day after the transfer to one week after the transfer.

Schweitzer-Mauduit and Universal Leaf Tobacco Co. Inc. requested that TTB eliminate the requirement to provide details on export shipments of processed tobacco. In support of this, Universal Leaf Tobacco Co. Inc., asserted the following: Exports are non-taxable; permitted manufacturers of processed tobacco maintain export records on their premises that provide sufficient information regarding export movement; and processed tobacco movements are tracked through other TTB forms as well as by other Federal agencies. These two commenters recommended that TTB require submission of TTB F 5250.2 on a monthly, rather than daily, basis. Universal Leaf Tobacco Co. Inc., further suggested amending TTB F 5250.2, and the related regulations, to allow for aggregate reporting of multi-container shipments to a single recipient within any 10 business day period. Customs Advisory Services Inc. also proposed that recordkeeping related to shipments of processed tobacco for export should be done on a daily basis, with summary reporting on a monthly basis. In addition, they proposed that TTB accept commercial records, such as invoices and bills of lading in lieu of the recordkeeping requirements specified in §§ 40.521(b) and 41.261(b), and the reporting requirements specified in §§ 40.522 and 41.262.

TTB response: Based on these comments, TTB has concluded that it would be appropriate to revise the recordkeeping requirements in §§ 40.182 and 40.521 to remove the requirement that tobacco product manufacturers and processed tobacco manufacturers maintain daily processed tobacco records. Tobacco product manufacturers will be required to account for processed tobacco on hand at the beginning and end of each month and will also be required to account for, and provide dates for, receipts of processed tobacco, use of processed tobacco in the manufacture of tobacco products, and any loss or destruction of processed tobacco. Manufacturers of

processed tobacco and manufacturers of tobacco products who are required to obtain authorization to engage in another business within the factory under §§ 40.47(b) and 40.72(b) will also still be required to maintain records of the date on which processed tobacco is received at the factory, removed from the factory, or lost or destroyed. The records of removals must still be made for each day by the close of the business day following the day on which the removal occurs. TTB believes that these changes address the concerns of the commenters regarding the recordkeeping burden, without jeopardizing the revenue.

In addition, TTB has reinstituted in this final rule a requirement that was removed by T.D. TTB–78 that manufacturers of tobacco products maintain records of tobacco received and disposed of. Prior to CHIPRA, the requirement set forth at § 40.182 regarding records of ''tobacco,'' would have included records of what would now be considered ''processed tobacco'' as well as of tobacco that had not yet been processed. In T.D. TTB–78, TTB amended § 40.182 to reflect the new category of ''processed tobacco'' by replacing references to ''tobacco'' with the term ''processed tobacco.'' Records of tobacco (unprocessed) were no longer required. However, TTB experience since the publication of the temporary rule has shown that the absence of such records hinders TTB's ability to determine whether the volume of products manufactured in a factory is consistent with the amount of tobacco received, used, and disposed of by the manufacturer. As a result, this final rule amends the recordkeeping requirements set forth at § 40.182 to require that the records of manufacturers of tobacco products include the quantity of tobacco (unprocessed) on hand at the beginning of each month and the quantity received, used, removed, lost, and destroyed during the month. Section 40.521 is also amended to extend this requirement to manufacturers of processed tobacco.

TTB does not concur with the suggestion by Altadis USA, Inc. that recordkeeping should only apply to leaf tobacco that is received in the factory and that is removed from the factory in the form of a tobacco product. TTB believes that the type of recordkeeping recommended by the commenters is the same recordkeeping that was in place prior to the statutory amendments of CHIPRA, that is, before TTB was mandated by Congress to regulate processed tobacco. The regulation of processed tobacco consistent with the goals of CHIPRA, that is, to prevent its being provided to entities operating illicit manufacturing operations, requires that manufacturers of tobacco products who remove processed tobacco for shipment to other entities be required to keep records of such shipments and that those records be made available to TTB. Thus, records of the movement of processed tobacco from a tobacco product manufacturer's facility, and not only records related to tobacco products, are necessary. However, TTB believes that changing the recordkeeping requirements as described above, from a daily to a monthly or situation-specific accounting of certain processed tobacco, may also address the concerns raised in this comment to the extent that it reduces the burden of accounting for processed tobacco within a continuous manufacturing process.

With regard to exports of processed tobacco, TTB agrees that submission of the TTB F 5250.2 may not be necessary in some cases. We are amending the regulations at §§ 40.522 and 41.262 to provide that manufacturers and importers that remove processed tobacco for export may, in lieu of submitting the TTB F 5250.2 by the close of business the day after the removal, submit a monthly summary report of removals upon written approval of the appropriate TTB officer. A manufacturer or importer that wishes to operate under such an alternative must apply for authorization to do so by submitting a written request to the appropriate TTB officer. The request must be accompanied by an example of the format intended for the monthly summary report. Such exporters are still required to maintain on their premises records of all export shipments, including records of the circumstances surrounding those shipments. At this time, we believe that if manufacturers and importers of processed tobacco maintain records related to export transactions on their premises, which must be made available to TTB for review upon request, TTB will have sufficient access to information related to exports to follow potential leads for diversion and thus protect the revenue. We note that manufacturers and importers of processed tobacco will, except in certain cases discussed below, still be responsible for submitting TTB F 5250.2 for all other (domestic) removals by the close of the business day following the removal, sale, or transfer. We believe that to do otherwise, such as to delay reporting by one week or longer to allow for aggregate reporting to a single recipient, would remove an important enforcement tool, that is, timely and detailed information about shipments of processed tobacco to entities not operating under a TTB permit.

With regard to recordkeeping, as is general practice, TTB will consider requests for alternate methods or procedures related to records of processed tobacco, provided that the proposed alternate method or procedure is consistent with the effect intended by the required procedure and it provides equivalent protection of the revenue. However, for clarity, a new sentence is added to §§ 40.521(c) and 41.261(c) specifically providing industry members with the option of applying for an alternate method or procedure with regard to recordkeeping related to shipments using commercial carriers.

Comment

TTB received comments from the Altria Group and Customs Advisory Services Inc. requesting clarification of whether importers of processed tobacco may receive domestic processed tobacco and, if so, how such receipts should be reflected in the required records and reports. The Altria Group also asked TTB to clarify the recordkeeping and reporting requirements for importers of processed tobacco who are also manufacturers of tobacco products.

Customs Advisory Services Inc. requested clarification of the meaning of the recordkeeping requirements at § 41.261(a)(2) that apply to importers of processed tobacco. That paragraph requires importers of processed tobacco to maintain records of the date and quantity of processed tobacco received ''otherwise than through importation.'' Customs Advisory Services Inc. asserts that, when that section is viewed alongside the monthly report form (TTB F 5220.6), it is unclear whether Line 8 of TTB F 5220.6, which requires accounting of tobacco products and processed tobacco ''received from other sources,'' would cover processed tobacco received from a domestic manufacturer or processed tobacco received from another importer. Customs Advisory Services Inc. recommended that TTB expand and clarify the scope of § 41.261(a)(2) and provide separate lines on TTB F 5220.6 ''to show imported tobacco received from other importers of processed tobacco and processed tobacco received from domestic producers of processed tobacco.'' Finally, Customs Advisory Services Inc. recommended that TTB modify the removals section of the monthly report required of the domestic manufacturer of processed tobacco (TTB F 5250.1) to provide a specific line for reporting removals of processed tobacco

shipped to an importer of processed tobacco. The commenter believes that the failure to account for these removals would result in substantial quantities of processed tobacco not being reported.

With regard to the issue of an importer of processed tobacco also being a manufacturer of tobacco products, the Altria Group states that it is unclear whether the recordkeeping and reporting requirements for an importer of processed tobacco that is also a manufacturer of tobacco products apply with regard to the imported tobacco consumed in the company's manufacturing operations. According to the Altria Group, to the extent that the temporary regulations are intended to apply to such internal consumption, they are unduly burdensome for the importer, stating in this regard as follows: ''Where a large volume of tobacco is imported and the vast majority is consumed in the manufacturing process of the importer, it is an onerous requirement to record and report each and every transaction of transfer to the manufacturing facility.'' The Altria Group further asserts that the TTB regulations, presumably in § 41.261, do not clearly state whether records must be maintained for the transfer of imported processed tobacco from storage to the manufacturing facility, suggesting that TTB require recordkeeping and reporting only of transfers of imported processed tobacco outside the company.

Finally, R.J. Reynolds stated that, like manufacturers of processed tobacco, importers of processed tobacco should be required to complete the TTB F 5250.2 (Report of Removal, Transfer, or Sale of Processed Tobacco).

TTB response: Regarding the transfer of domestic processed tobacco to an importer of processed tobacco, we agree that the regulations in question are ambiguous and, therefore, in this final rule we are amending §§ 40.521(a)(4) and (a)(5) and 40.522(d) setting forth recordkeeping and reporting requirements to specifically incorporate language showing that a manufacturer of processed tobacco may transfer domestic processed tobacco to an importer of processed tobacco. Such transfers are recorded and reported in the same way that transfers of processed tobacco are made from a manufacturer of processed tobacco to another manufacturer of processed tobacco or to a manufacturer of tobacco products or an export warehouse proprietor. In addition, in response to Customs Advisory Services Inc.'s suggestion, we intend to amend TTB F 5250.1 to specifically provide for the reporting of removals of processed tobacco shipped to an importer of processed tobacco.

We do not believe at this time that § 41.261(a)(2) needs to be amended to clarify its scope with regard to an importer of processed tobacco receiving processed tobacco from a domestic manufacturer of such tobacco. The regulatory text currently requires that records be maintained reflecting the date and quantity of processed tobacco ''received otherwise than through importation,'' and that phrase includes any receipt such as the type in question. Similarly, we do not believe that TTB F 5220.6 needs immediate amendment to provide for receipts from domestic manufacturers of processed tobacco or from other importers, as it currently requires accounting of processed tobacco ''received from other sources'' and this phrase also includes any receipt that is not a direct importation. However, we do intend to provide clarifying instructions to TTB F 5220.6 after publication of this final rule.

In addition, TTB acknowledges that there is no line on the monthly report of importers of processed tobacco (TTB F 5220.6) specifically dedicated to reporting the amount of imported processed tobacco consumed in the manufacturing process, as noted in the Altria Group's comments. TTB regulations consider importing and manufacturing to be two distinct businesses whose operations are covered by two separate permits, with their own respective recordkeeping and reporting requirements. Accordingly, where processed tobacco is imported by the same entity that uses it in the manufacture of tobacco products, to create a complete record, the importation must be reflected in the records and on the monthly report of the importer, under that importer's permit number, and such report and records also must show the processed tobacco as transferred to the records associated with the permit of the manufacturer, even if the entity that holds the importer permit and the manufacturing permit are the same entity.

In response to the Altria Group's comments that this is an ''unreasonable burden'' on importers of processed tobacco who are also manufacturers of tobacco products, we note that the recordkeeping and reporting requirements for manufacturers of tobacco products who import tobacco for use in such manufacture are similar in scope to the requirements that were in effect prior to the amendments made in response to CHIPRA. Previous regulations at §§ 40.181–40.183 required that a manufacturer of tobacco products maintain records of the date and quantity of all tobacco other than tobacco products received, together with the name and address of the person from whom received. The new provisions require accounting for processed tobacco, but also require records that connect the processed tobacco imported under an importer's permit to that transferred to and used by a manufacturer of tobacco products under a different permit. We believe this tracking of processed tobacco between the importation and the use in manufacture is necessary to regulate processed tobacco as required by CHIPRA.

In response to R.J. Reynolds' suggestion that TTB require importers of processed tobacco to submit TTB F 5250.2 when they make shipments to entities that do not possess a permit, we note that the regulations already require such submissions. Section 41.262(d) requires an importer who transfers or sells processed tobacco to someone other than a person holding a TTB permit to report such sale or transfer on TTB F 5250.2 by the close of the business day on the day following the transfer or sale.

Comment

We received five comments from industry members requesting that TTB revise the regulations to allow an exemption from certain reporting and recordkeeping requirements related to shipments of processed tobacco as samples or for experimental and other small quantity purposes, or allow an exemption from the requirement that a manufacturer of tobacco products must obtain authorization to operate as a manufacturer of processed tobacco if that manufacturer removes processed tobacco for purposes other than destruction. A few comments addressed in particular that portion of the definition of ''package'' in § 40.11 that provides that a container of processed tobacco weighing 10 pounds or less (including any non-tobacco ingredients or constituents), that is removed within the meaning of that term in the regulations, is deemed to be a package for sale or delivery to the ultimate consumer.

Schweitzer-Mauduit and R.J. Reynolds both asserted that the ''10 pounds or less'' weight specified in the § 40.11 definition is unduly restrictive because manufacturers ship small amounts of processed tobacco that are samples for testing or analysis and thus are not intended to be used as roll-your-own tobacco, pipe tobacco, or any other taxable tobacco product. Similarly, National Tobacco asserted that most shipments of processed tobacco are ''of

a limited noncommercial nature, such as test samples to labs, batch samples for export, batch samples from new importers, samples direct from farmers for evaluation.'' National Tobacco recommended that TTB require weekly rather than daily reporting of such transfers, or, as an alternative, that TTB create an exception to the reporting requirement for sample shipments of a certain weight, for example, two pounds.

In addition to the transfer of samples of processed tobacco for experimental purposes, Universal Leaf Tobacco Co. Inc., commented that ''the sale of processed tobacco is often carried out through the delivery of a representative sample of the processed tobacco to a prospective buyer'' as a ''slice'' of processed tobacco, which typically weighs between 5 and 10 pounds. Universal Leaf Tobacco Co. Inc., explained that the samples are extremely small portions of the processed tobacco being sold and are not fit for direct consumption in the marketplace; they therefore requested that the regulations be amended to exclude samples from the reporting requirements on TTB Forms 5220.6, 5250.1, and 5250.2. R.J. Reynolds alternatively suggested that TTB add lines to the monthly report, TTB F 5250.1, to report tobacco shipped as samples to potential customers or government agencies not intended for sale and tobacco shipped off of the premises for experimental purposes.

In its comments, the Altria Group claimed that because there is no tax on processed tobacco, there is no immediate jeopardy to the revenue related to the transfer of processed tobacco unless the processed tobacco is transferred to an unpermitted facility. Accordingly, the comment suggested that TTB exempt manufacturers of tobacco products that also manufacture processed tobacco from the requirement to obtain authorization to engage in either the removal of processed tobacco for experimental purposes or the transfer of processed tobacco between permitted facilities, by providing manufacturers of processed tobacco with exceptions similar to those provided for manufacturers of tobacco products, such as the experimental purposes provision in § 40.232, and the exemption for transfer in bond (between permitted facilities) provided for in § 40.233. The Altria Group stated that these provisions provide an opportunity for a manufacturer to test machinery using tobacco products, conduct testing of tobacco products, and transfer tobacco products among permitted facilities for product development or other legitimate business purposes without payment of tax so long as certain records are maintained. With regard to removals for experimental purposes, the Altria Group suggested that the manufacturer of tobacco products be exempt from the requirement to obtain authorization to operate as a manufacturer of processed tobacco under 27 CFR 40.72(b) if that manufacturer removes processed tobacco for experimental purposes or for transfers between permitted facilities. The comment recommended requiring recordkeeping of all such transfers and also requiring that the processed tobacco either be destroyed in the testing process or be returned to the manufacturer for documented destruction. The Altria Group also proposed that a manufacturer submit to TTB an initial notice that the manufacturer intended to engage in such transfer activities.

TTB response: TTB believes that the basic point made by these commenters is valid. Accordingly, in this final rule document we have amended § 40.72(b) to provide that a manufacturer of tobacco products that processes tobacco on the factory premises solely for use in the manufacture of tobacco products under that permit and that removes the processed tobacco from those premises only for purposes related to the business of a manufacturer of tobacco products, and not for purposes related to the business of a manufacturer of processed tobacco, may engage in those operations without obtaining prior authorization from TTB. Under the new text of § 40.72(b)(2), removals of processed tobacco that are considered removals for purposes related to the business of a manufacturer of tobacco products, and therefore do not require TTB authorization, include removals of samples for soliciting orders of tobacco products and removals of processed tobacco for destruction, for scientific testing or testing of equipment, and for transfer between permitted premises of the same manufacturer. A manufacturer of tobacco products who engages in any of these removals and who maintains adequate records of the disposition of such processed tobacco may engage in such removals without first obtaining authorization from TTB. Any removal not adequately supported by records and any other type of removal other than those listed will be treated as a removal related to the business of a manufacturer of processed tobacco, for which the manufacturer of tobacco products must first obtain authorization to engage in another business within the factory under § 40.47 and keep records and submit reports under §§ 40.521 and 40.522, unless the manufacturer can show to the satisfaction of the appropriate TTB officer that the removal is connected with the business of a manufacturer of tobacco products. In this final rule TTB has amended §§ 40.47(b), 40.202(b), and 40.491 to conform to the changes made in § 40.72(b).

TTB also amended § 40.522(d) to provide exceptions from the reporting of certain removals on TTB F 5250.2. TTB F 5250.2 is used by a manufacturer or importer to report certain removals of processed tobacco; the form must be submitted to TTB by the close of the business day on the day following the removal. Under the temporary regulations, § 40.522(d) requires manufacturers to report on TTB F 5250.2 any removals of processed tobacco for shipment to any person not holding a TTB permit as a manufacturer of processed tobacco, a manufacturer of tobacco products, or an export warehouse proprietor. The final regulations no longer require manufacturers of tobacco products to report removals of processed tobacco to entities not holding such permits if those removals are for purposes related to the business of a manufacturer of tobacco products, such as removals for destruction, for scientific testing or testing of equipment, for soliciting orders of tobacco products, or for transfer between permitted premises of the same manufacturer. These exceptions to the reporting requirement are described in § 40.72(b)(2). In addition, manufacturers of processed tobacco will not be required to report on TTB F 5250.2 any removals of processed tobacco for destruction, scientific testing, or testing of equipment that result in the destruction of the processed tobacco or the return of the tobacco to the factory premises. Similarly, TTB has added a new paragraph § 41.262(d)(3) stating that an importer of processed tobacco that ships or transfers processed tobacco for scientific testing which results in the destruction of the processed tobacco is not required to report such shipment or transfer on TTB F 5250.2. Manufacturers and importers must still report such removals on their respective monthly reports.

Comment

We received two additional comments from R.J. Reynolds regarding recordkeeping and reporting requirements for manufacturers of processed tobacco. R.J. Reynolds requested confirmation that physical possession (and not ownership) of

processed tobacco is the primary criterion used to identify the permit holder responsible for reporting the associated activity. Additionally, R.J. Reynolds asked that TTB acknowledge the likelihood of variations in the weight of processed tobacco as it is blended with other ingredients and as it gains and loses moisture due to the atmospheric conditions of the manufacturing process. R.J. Reynolds asks that TTB provide guidance on how these variations are to be reported.

TTB response: In response to the first point, as a general principle, TTB agrees that physical possession and control over the removal of the processed tobacco triggers the recordkeeping and reporting requirements, rather than only legal ownership of the processed tobacco. The permittee is responsible for the physical movement of the processed tobacco and the permittee who removes the processed tobacco from its factory is responsible for reporting the transfer. With regard to the second point, we acknowledge that there can be significant variations in the weight of processed tobacco. Because the variation in the weight of processed tobacco is specific to each industry member's manufacturing process, any standardized guidance by TTB would be too limiting on industry members to include in this final rule or too general to account for individual variations. Accordingly, manufacturers of processed tobacco should maintain records supporting any variations in weight throughout their manufacturing process.

Comment

Universal Leaf Tobacco Co. Inc., requested that TTB remove the signature requirement from TTB F 5250.2 because no signature is required under the pertinent regulatory provisions at § 40.521. Schweitzer-Mauduit and Universal Leaf Tobacco Co. Inc., requested that TTB remove the requirement for personal information about the person picking up the processed tobacco for delivery, that is, lines 16, 17 and 18 of TTB F 5250.2. These lines require the person be identified by name, address, and government-issued identification number (such as a driver's license number) and that the vehicle be identified by license tag number. According to Universal Leaf Tobacco Co. Inc., ''this requirement infringes on certain privacy matters.'' Schweitzer-Mauduit asserts that such collection of information is burdensome for its employees, while the drivers about whom information is collected find the inquiry intrusive and objectionable.

TTB response: With regard to the requirement that TTB F 5250.2 bear a signature, the IRC at section 6061 provides that any return, statement, or other document required to be made under any provision of the internal revenue laws or regulations shall be signed in accordance with forms or regulations prescribed by the Secretary of the Treasury. The TTB regulations at 27 CFR 40.41 provide that the appropriate TTB officer is authorized to prescribe all forms required by part 40 and that all of the information called for in each form shall be furnished as indicated by the headings on the form and by the instructions on or pertaining to the form. In addition, § 40.41 states that information called for in each form shall be furnished as required by part 40 and that, when a return, form, claim, or other document called for under part 40 is required by part 40, or by the document itself, to be executed under penalties of perjury, it shall be executed under penalties of perjury. The same provisions apply to part 41, with regard to importers, under § 41.21. The form itself is required under §§ 40.522(d) and 41.262(d), which state, in pertinent part, that the TTB F 5250.2 must be submitted ''in accordance with the instructions on the form.'' Accordingly, the signature requirement need not be specifically restated in the regulations.

Also, information about the driver and vehicle involved in the removal of processed tobacco from the regulated premises provides TTB with information that has been found effective in tracking processed tobacco and preventing diversion to illegal manufacturers. TTB believes that the information we require at that point is the minimum necessary to ensure protection of the revenue by tracking processed tobacco. It remains the position of TTB that both importers and manufacturers must provide TTB with certain information regarding the person involved in the delivery of the processed tobacco to a person who does not have the appropriate TTB permit. The information that we are requiring is consistent with similar recordkeeping required under the Contraband Cigarette Trafficking Act (CCTA), 18 U.S.C. chapter 114, which deals primarily with contraband cigarettes and smokeless tobacco and is administered by the Department of Justice, Bureau of Alcohol, Tobacco, Firearms, and Explosives (ATF). However, in considering these comments, TTB has determined that, rather than the personal address of the person picking up the shipment, a more appropriate requirement would be the business address of the company for which the driver works. As a result, in the final rule, the word ''business'' is added in §§ 40.521(b)(2) and 41.261(b)(2) to clarify that records of the business address of the driver picking up the processed tobacco must be kept, rather than the driver's personal address. Further, in this final rule both §§ 40.521 and 41.261 have been amended to specify that an alternate method may be approved for the collection of such information in the case of shipments by common carrier. Section 41.261 has also been amended to incorporate some technical changes for clarity and for consistency with the language contained in § 40.521.

Comment

Customs Advisory Services Inc. recommended that the inventory reporting requirement be clarified, specifically with regard to how often TTB F 5210.9 (Inventory—Manufacturer of Tobacco Products or Processed Tobacco) must be submitted. The commenter points to the temporary regulations at 27 CFR 40.523 that require a manufacturer to make an inventory ''at the time of commencing business, at the time of transferring ownership, at the time of changing location of the factory, at the time of concluding business, and at such other time as any appropriate TTB officer may require,'' and asserts that reporting of inventory only upon the opening and closing of business operations ''could be meaningless reporting for companies with ongoing operations'' but that the phrase ''* * * and at such other time as any appropriate TTB officer may require'' is vague and undefined.

R.J. Reynolds asserted that there are ''major inconsistencies'' within the proposed regulations regarding the reporting of inventories. Under § 40.523, a manufacturer of processed tobacco operating under the transitional rule set forth in § 40.493 must make a true and accurate inventory on TTB F 5210.9 within 10 days of the date of TTB's written acknowledgement of the receipt of the application filed under § 40.492. R.J. Reynolds points out that importers of processed tobacco are not required to provide a similar inventory and, as these entities could easily have inventory in their possession, a similar reporting should be required. In addition, R.J. Reynolds believes that, because the date of the initial inventory and the dates that must be covered by a manufacturer's first monthly reports do not correspond, the relationship between the two types of reports is unclear.

TTB response: With regard to the comments from Customs Advisory Services Inc., under § 40.523, the phrase ''at such other time as any appropriate TTB officer may require'' provides TTB with the authority to require an inventory when necessary, for example, in connection with an audit or investigation of an industry member, which is the most common use by TTB of the authority to require an inventory. The same language appears in § 40.201 which sets forth inventory requirements for manufacturers of tobacco products and has been an effective tool for TTB in regulating the industry without the burden of monthly inventories. Neither the regulatory text at § 40.523 nor the form TTB F 5210.9 mentions a requirement to submit to TTB an inventory monthly and none is deemed necessary for TTB purposes.

In response to R.J. Reynolds' comments, we agree that for the same reasons a manufacturer of processed tobacco must perform an inventory at specified times, an importer of processed tobacco should also perform an inventory. The omission of this requirement was an oversight. Importers of tobacco products are not currently required to submit inventories because the products that they store and ship could only be taxpaid tobacco products, the tracking of which has been seen as needing less regulatory oversight. However, importers of processed tobacco must account for all processed tobacco imported and also must report on the TTB F 5250.2 processed tobacco shipped to a non-permittee. The inadvertent omission of an inventory requirement for importers of processed tobacco in the temporary regulations is corrected in this final rule through the addition of a new section 27 CFR 41.264 that mirrors the inventory requirement applicable to manufacturers of processed tobacco appearing at § 40.523. TTB authority to require such inventories is set forth in the Internal Revenue Code of 1986 at 26 U.S.C. 5721, and applies equally to manufacturers and importers of processed tobacco.

With regard to the other comments related to TTB F 5250.1 and TTB F 5210.9, we have addressed issues relating to the use of those forms with individual industry members, on a case-by-case basis, since the publication of T.D. TTB–78, and we do not believe that any further regulatory action is necessary on these points.

Applicants for Permits To Manufacture Processed Tobacco

Comment

Two commenters suggested that we amend our regulations to address whether, and to what extent, TTB will consider specific factors when evaluating a tobacco processor's permit application.

The Law Offices of Barry Boren asserted that the regulations addressing ''Investigation of Applicant'' at 27 CFR 40.498(b) and 41.238(b) imply a life-time ban from obtaining a permit for applicants with a felony conviction. The commenter stated that, in the past, TTB has determined that a felony conviction should not necessarily be a life-time ban to obtaining a permit and that, rather than a life-time ban, five years is a ''reasonable ban'' in such cases so long as the agency does not have other reasons for denying an application for a permit.

Venable, LLP requested that TTB amend its regulations to clarify that we will only deny a permit to an applicant based on the conduct of an officer, director, or principal stockholder of a company, and only if that person is actively involved in the day-to-day management or operations of the applicant. Venable, LLP referenced two Federal cases from the 1930s to demonstrate that TTB's predecessors, such as the Internal Revenue Service, ''primarily based their decisions to deny a permit to an applicant on the level of involvement of the officer, director, or principal stockholder at issue in the day-to-day management or operations of the applicant.'' Venable, LLP also described the standards for denial of permits applied by other Federal agencies. Venable, LLP suggested that TTB adopt a ''present responsibility'' standard, in which ''[t]he government frequently finds that companies are 'presently responsible' so long as the officer does not control or manage the day-to-day operations of the company, or where the company has instituted sufficient controls to prevent the officer from becoming involved in future government contracts.'' In evaluating an officer's conduct, Venable, LLP recommended that TTB consider mitigating factors, including: (1) The nexus between the activity for which the officer, director, or principal stockholder is under indictment and the applicant's business operations; (2) whether the officer, director, or principal stockholder is involved in the day-to-day management or operations of the applicant; (3) the applicant's cooperation with TTB and willingness to take actions to address TTB's concerns; (4) the applicant's willingness to implement remedial or monitoring measures determined necessary by TTB; (5) whether the applicant has, or will shortly, implement policies to prevent the future occurrence of offenses; and (6) the likelihood that any legal proceedings against an officer, director, or principal stockholder are likely to be resolved in the person's favor.

Venable, LLP also requested that TTB consider extending the transitional rule under § 40.493, which provides that manufacturers and importers of processed tobacco already in operation who applied to TTB for a permit by June 30, 2009, could continue to engage in that business pending final action by TTB on the permit application. Venable, LLP stated that the purpose of transitional rule was ''to ensure that long-standing manufacturers and processors that have operated successfully and in compliance with the law are not unfairly denied the right to continue their business.'' The commenter suggested an extension to this rule to stay denial of any processed tobacco manufacturer's or importer's permit application until there is a final administrative and/or judicial review of their application, or a final resolution of any judicial proceedings involving an officer, director, or principal shareholder of the company.

TTB response: First, the regulations at §§ 40.498(b) and 41.238(b) repeat the standards of review that TTB may use to deny a permit under 26 U.S.C. 5712; the regulatory and statutory texts state that a permit may be denied if TTB finds that the applicant is, by reason of his business experience, financial standing or trade connections or by reason of previous or current legal proceedings involving a felony violation of any other provision of Federal criminal law related to tobacco products, processed tobacco, cigarette paper, or cigarette tubes, not likely to maintain operations in compliance with the provisions of title 26, United States Code, chapter 52, or has been convicted of a felony violation of any provision of Federal or State criminal law relating to tobacco products, processed tobacco, cigarette paper or cigarette tubes, or has failed to disclose any material information required or made any material false statement in the application for permit. The fact that a permit may now be denied for reasons related to a felony conviction does not imply that the permit will necessarily be denied for such a conviction or that such a conviction will result in a life-time ban from obtaining a TTB permit. Rather, as has been the case historically, TTB believes that an individual, case-

by-case determination is necessary for each applicant, given the variability of circumstances. TTB will apply these provisions, as it has applied the provisions related to determining qualification for a permit, by considering all relevant factors. A five-year limitation, as suggested by Mr. Boren, would eliminate TTB's flexibility to individually evaluate each applicant's particular situation. With regard to the mitigating factors suggested by Venable, LLP, although it would not be appropriate to include specific mitigation standards in the regulations, those suggested by Venable, LLP are factors that TTB could reasonably consider when evaluating an application for a permit.

Section 702 of CHIPRA merely adds manufacturers and importers of processed tobacco to the list of persons in sections 5712 and 5713(a) of the IRC who must apply for and obtain a permit from TTB in order to engage in business, while it amends sections 5721, 5722, 5723, and 5741 to add references to processed tobacco with regard to requirements for making inventories, keeping records, packaging and labeling, and reporting. As a result, the same regulatory authority in these areas applies to activities involving tobacco products and processed tobacco.

As for the request that TTB stay the denial of any processed tobacco manufacturer or importer permit application, TTB has no authority to extend the statutory transitional rule reflected in § 40.493. However, TTB does have an administrative process in place in 27 CFR part 71, consistent with Federal administrative law, through which an applicant for a permit may contest TTB's denial of a permit application. Under 27 CFR 71.59, an applicant may request a hearing before an administrative law judge, within 15 days of receipt of notice of the contemplated disapproval of the application. Thus, TTB's regulations already provide an appropriate administrative process for all permits administered under TTB's authority under the IRC.

Roll-Your-Own and Pipe Tobacco Issues

Comment

John Middleton Co. asserted that the regulations addressing the packaging of pipe tobacco, specifically 27 CFR 40.25a(b)(3)(i), are not authorized by CHIPRA because CHIPRA only mentions pipe tobacco in reference to its tax rate increase. That section deems a product to be roll-your-own tobacco rather than pipe tobacco if the package does not bear the declaration ''pipe tobacco'' in a specified manner everywhere on the package that the brand name appears. These comments were made in the context of a request for an extension of the time manufacturers and importers could use up existing packaging before being required to come into compliance with the new packaging standards. John Middleton Co., along with the rest of the Altria Group companies, further argued that the temporary regulations place an onerous burden on pipe tobacco products because ''the focus on regulation of the pipe tobacco industry is not anticipated, authorized or required by the CHIPRA legislation nor is there anything in CHIPRA that would have alerted manufacturers of pipe tobacco that such requirements would be forthcoming.''

TTB response: First, TTB notes that the package use-up period was extended from the original date of August 1, 2009, until March 23, 2010 (see T.D. TTB–81, 74 FR 48650). With regard to the certain points made about the classification of pipe tobacco and roll-your-own tobacco based on package statements, although CHIPRA did not specifically highlight pipe tobacco beyond the section 701 tax rate increase, as noted in T.D. TTB–78, TTB determined that because of the revenue implications resulting from the tax rate changes made by CHIPRA, there was a need for more regulatory detail to clarify the difference between the two products. Further, as described above, the statutory definitions of pipe tobacco and roll-your-own tobacco both require consideration of the packaging and labeling of the product—specifically, whether the packaging or labeling causes it to be ''suitable for use and likely to be offered to, or purchased by, consumers as'' tobacco to be smoked in a pipe or as tobacco for making cigarettes or cigars or for use as wrappers thereof. In T.D. TTB–78, TTB set forth regulations regarding how that statutory language would be applied. Those regulations were promulgated under 26 U.S.C. 5723(a) and (b), which provide the authority to prescribe regulations regarding the packaging and labeling of tobacco products, and under 26 U.S.C. 7805(a), which confers on the Secretary of the Treasury the broad authority to prescribe ''all rules and regulations as may be necessary by reason of any alteration of law in relation to internal revenue.''

Comment

TTB received two comments that requested that we define ''conspicuousness'' as it is used in § 40.25a(b)(3)(i). That regulatory provision refers to a package that does not bear the ''pipe tobacco'' declaration ''in substantially the same conspicuousness of type and background as the brand name,'' the result of which is that the package would be deemed roll-your-own tobacco rather than pipe tobacco for tax purposes.

The Law Offices of Barry Boren suggested that, because the term ''conspicuousness'' is not defined in TTB's regulations, TTB should adopt the definition of conspicuousness used in the U.S. Customs and Border Protection (CBP) regulations, noting in this regard that in 19 CFR 134.1(k), ''conspicuous'' is defined as ''capable of being easily seen with normal handling of the article or container.'' By adopting the same conspicuous standard as CBP, TTB would ''help manufacturers and importers better understand their obligations under the statute and promote compliance and enforcement,'' and prevent confusion and unintentional noncompliance, which would result from agencies adopting different definitions and policies for the same term. Further, TTB should adopt a policy that articles need not be marked in the most conspicuous place but must be marked in any conspicuous place. Finally, the commenter suggested that TTB adopt provisions from the CBP regulations at 19 CFR 134.41 regarding the methods and manner of marking.

National Tobacco suggested that, due to the inherently ambiguous nature of the ''conspicuousness'' standard in § 40.25a(b)(3)(i), TTB should set up a process allowing tobacco companies to get prompt, advance TTB approval of new packaging designs. Under this approval process, packaging designs submitted to TTB for review would be deemed approved if TTB did not specify any objections within a 15-day time period. Alternatively, TTB should further define ''conspicuousness'' by specifying a minimum font size for the term ''pipe tobacco'' relative to the font size of the product brand name each time the brand name appears on the packaging.

National Tobacco also suggested that TTB clarify § 40.25a(b)(3)(ii), under which processed tobacco removed from a factory in a package is deemed to be roll-your-own tobacco if the package or accompanying materials bear any representation that would suggest a use other than as pipe tobacco. National Tobacco asks that TTB state that the term ''accompanying materials'' used in that section includes any point of sale advertising and all other printed product communications issued by the manufacturer of pipe tobacco products.

TTB response: TTB does not believe that it is appropriate to define the word ''conspicuousness'' in this final rule because any attempt to do so without first going through a period of public notice and comment could prove to be unnecessarily limiting. The current regulatory text in § 40.25a(b)(3)(i) allows for sufficient flexibility depending on the design and size of the package, and TTB believes this is the preferable approach at this time. In this regard, TTB notes that, after the enactment of CHIPRA, Congress passed and the President signed the Family Smoking Prevention and Tobacco Control Act (Pub. L. 111–31) affecting the graphics and warning statements required to appear on certain tobacco products. These additional issues now faced by the tobacco industry regarding packaging and labeling requirements underscore our belief that a flexible approach, particularly with regard to size and placement of certain information on a tobacco product package, is necessary for the near future. Rather than establishing a new process of review and prior approval by TTB of each tobacco product package, TTB will consider whether clarifying the conspicuousness standard in future guidance is needed.

With regard to the request that TTB amend § 40.25a to specify what may be ''accompanying materials,'' we agree with the comment. The final regulations at § 40.25a(b)(3)(ii) and § 41.30(b)(3)(ii) provide that ''accompanying materials'' includes, but is not limited to, any point of sale advertising or other printed product communications issued by the manufacturer or importer of pipe tobacco products. In addition, the inclusion of cigarette papers or tubes in a package bearing a ''pipe tobacco'' declaration will suggest a use other than pipe tobacco.

Comment

We received a comment from Geoffrey Ranck of Domestic Tobacco Co., recommending that TTB add a line to the monthly report required of importers of tobacco products or processed tobacco (TTB F 5220.6) to account for cigar tobaccos (filler, binder, and cigar wraps) separately from roll-your-own tobacco. Mr. Ranck noted that, although CHIPRA amended the definition of roll-your-own tobacco so that cigar tobacco must now be included in the accounting of roll-your-own tobacco, cigar tobacco is still considered to be distinct from traditional roll-your-own cigarette tobacco by the U.S. Department of Agriculture (USDA) in its implementation of the Fair and Equitable Tobacco Reform Act (commonly referred to as the ''Tobacco Buyout'') and by the various states in their implementation of the Master Settlement Agreement.

TTB response: Although the categories on TTB F 5220.6 correspond directly to the types of tobacco products recognized under the IRC definitions (small cigarettes, large cigarettes, small cigars, large cigars, snuff, chewing tobacco, pipe tobacco, and roll-your-own tobacco), we recognize that other Federal agencies have different definitions of these tobacco products. Mr. Ranck's suggestion has merit and, when updating TTB F 5220.6, TTB will explore the extent to which such a change would meet the needs of industry members and be consistent with and facilitate reporting required by other Federal agencies or the Master Settlement Agreement.

Comment

Two commenters addressed the designations that must appear on tobacco product packages, under § 40.216b and 41.72b, to identify those products for tax purposes. National Tobacco noted that the temporary regulations removed ''Tax Class L'' and ''Tax Class J'' as approved designations for packages of pipe tobacco and roll-your-own tobacco, respectively, and suggested that TTB also eliminate all ''Tax Class'' designations for the other tobacco products in favor of accurate descriptive terms. This would remove ''Class A'' and ''Class B'' as alternatives for the term ''small cigarette'' and ''large cigarette,'' ''Tax Class C'' as an alternative for the term ''chewing tobacco'' and ''Tax Class M'' as an alternative designation for ''snuff''. National Tobacco and the Law Offices of Barry Boren requested that TTB also authorize the use of a number of designations for roll-your-own tobacco in addition to those prescribed in § 40.216b and 41.72b. The Law Offices of Barry Boren stated that the labeling requirements proposed for cigar wrappers are unduly restrictive; that cigar wrappers have been known throughout the industry and the general public under names such as ''cigar wrappers,'' ''cigar wraps,'' ''blunts,'' ''leaf wraps'' and ''flat wraps;'' and that any of these names should be acceptable for marking purposes. National Tobacco proposed adding ''tobacco cones'' and ''cigar tubes'' as designations, stating that the use of the term ''roll-your-own tobacco'' to designate such products may cause confusion between products used for making cigars and products used for making cigarettes, particularly because roll-your-own tobacco used for making cigarettes is subject to State excise taxes and the payment obligations of the Master Settlement Agreement.

TTB Response: First, TTB notes that the designations required on tobacco product packages are intended to identify the product for purposes of Federal excise tax. The designation indicates the tax category under which the taxpayer removed the product domestically or obtained release of an imported product. The regulations have traditionally allowed industry members a choice between using a descriptive term and using a ''Tax Class'' reference. For example, under the previous version of § 40.216a, a package of pipe tobacco had to bear either the designation ''pipe tobacco'' or the designation ''Tax Class L.'' Although we agree that descriptive terms for all tobacco products may be preferable in some regards, the removal of the options to use ''Tax Class L'' to designate pipe tobacco and ''Tax Class J'' to designate roll-your-own tobacco was specific to those products and to the ways those products are defined by statute. The designations ''Tax Class L'' and ''Tax Class J'' were removed as authorized designations because the IRC definitions, as discussed above, require consideration of the packaging and labeling of pipe tobacco and roll-your-own tobacco—specifically as to whether packaging, labeling, appearance, or type of the tobacco, cause the product to be ''suitable for use and likely to be offered to, or purchased by, consumers'' as either of those products. The statutory definitions of the other products do not require a similar consideration of the packaging and labeling. Accordingly, because TTB does not have a compelling reason to adopt the requested change within the scope of administration and enforcement of the Federal excise tax, and because the alternative notices are currently in use by industry members, it would not be appropriate to adopt the proposed changes in this final rule without notice to, and opportunity for comment by, industry members.

With regard to the designations authorized for roll-your-own tobacco, under the temporary regulations, the following terms may be used: ''roll-your-own tobacco,'' ''cigarette tobacco,'' ''cigar tobacco,'' ''cigarette wrapper,'' and ''cigar wrapper.'' TTB believes these alternative designations are sufficient for administering and enforcing the Federal excise tax provisions. The designations are used for tax purposes and are not intended to reflect the scope of terms used for marketing the product. TTB notes that the regulations do not prohibit additional terms from appearing on tobacco product packages

that also bear one of the prescribed designations. Such additional information may appear so long as it does not contradict or conflict with the tax designation.

Comments To Be Addressed in a Future Rulemaking

TTB received additional comments that relate to pipe tobacco and roll-your-own tobacco issues, particularly with regard to distinguishing between the two products for tax purposes. Comments from the South Dakota Attorney General's Office, National Tobacco, the Law Offices of Barry Boren, Altadis USA, Inc., and the Campaign for Tobacco-Free Kids suggested that TTB clarify the characteristics that distinguish pipe tobacco from roll-your-own tobacco to prevent mislabeling of roll-your-own tobacco as pipe tobacco. Altadis USA, Inc. expressed concern about ''massive tax cheating in the form of misclassification of RYO tobacco as pipe tobacco'' and submitted a ''Draft Revision of Temporary/Proposed Regulation on Classification of Pipe Tobacco and Roll-Your-Own Tobacco.''

The Pipe Tobacco Council, National Tobacco, and Altadis USA, Inc. requested that TTB ''grandfather'' pipe tobacco brands that were on the market prior to the enactment of CHIPRA in 2009. Although various ''grandfather'' proposals have been suggested to TTB, they differ in details. In general, under those various proposals, brands that were marketed as pipe tobacco prior to a certain date, for example, April 1, 2009, would continue to be deemed pipe tobacco after that date so long as the product remained sufficiently similar to the product that was produced under that brand name before April 1, 2009. As a result, under the various proposals, any standards that TTB might find to distinguish between pipe tobacco and roll-your-own tobacco would not be applied to ''grandfathered'' brands.

The Pipe Tobacco Council also expressed concern about the importation of cut tobacco that was not put up into consumer packages, specifically that there would be a disparity in treatment between packaged and unpackaged imported tobacco. The Pipe Tobacco Counsel recommended that cut tobacco imported under a certain subheading of the Harmonized Tariff Schedule of the United States (HTSUS) be categorized as roll-your-own tobacco, with excise tax due upon release from customs custody. That subheading (2403.10.30.90) applies, in general terms, to smoking tobacco that is to be used in products other than cigarettes and that is not prepared for marketing to the ultimate consumer in the form and package in which it's imported.

The issues involved in distinguishing between pipe tobacco and roll-your-own tobacco merit separate treatment. To obtain public input specifically on those issues, TTB published in the **Federal Register** on July 22, 2010 (75 FR 42659), an advance notice of proposed rulemaking, Notice No. 106, referred to earlier in this comment discussion. After the close of the Notice No. 106 comment period, TTB received a request to meet with an industry member and its legal representation to present TTB with a proposal to use certain physical characteristics to distinguish between pipe tobacco and roll-your-own tobacco that differ from the standards proposed by the other commenters. That new proposal, which was submitted as a slide presentation, is now posted with the comments on Notice No. 106 as Comment 23 and may be viewed at the Regulations.gov Web site (*www.regulations.gov*) within Docket No. TTB–2010–0004. Through publication in the **Federal Register** of Notice No. 120 on August 24, 2011 (76 FR 52913), TTB reopened the public comment period for Notice No. 106, until October 24, 2011, in order to provide an opportunity for public feedback to the new proposal. TTB is currently reviewing the comments and determining the appropriate rulemaking action in response.

Other Changes to the Temporary Regulations

In addition to those changes noted in the above discussion of comments, this final rule document makes the following changes to the temporary regulations published in T.D. TTB–78 and T.D. TTB–81:

- In §§ 40.11 and 41.11, the definition of ''package'' is amended to provide for several exceptions to the statement that ''[a] container of processed tobacco, the contents of which weigh 10 pounds or less (including any non-tobacco ingredients or constituents), that is removed within the meaning of this part, is deemed to be a package offered for sale or delivery to the ultimate consumer.'' Those exceptions are provided to recognize that manufacturers and importers of processed tobacco may remove processed tobacco in small amounts for purposes related to the business of a manufacturer or importer of processed tobacco; the exceptions allow the removal of such small amounts without that removal being deemed a removal of a taxable product and thus triggering the tax. The exceptions are similar to those provided to manufacturers of tobacco products who remove tobacco products without payment of tax for specified purposes. The definition of ''package'' is also amended to add references to § 40.25a and 41.30, respectively, to direct the reader to the tax rates that apply to processed tobacco that is placed into a package and removed. Also, in §§ 40.11 and 41.11, TTB is amending the definition of ''packaging'' to clarify that, when used in the context of an action, the term ''packaging'' refers to the activity of placing processed tobacco or a tobacco product in a package. This differentiates the use of the verb form of ''packaging'' from that of the noun form, as both appear in the regulatory text.
- In §§ 40.25a(b)(2) and 41.30(b)(2), a sentence has been added that mirrors text in the definition of ''package'' in §§ 40.11 and 41.11 described in the first bullet above. Specifically §§ 40.25a(b)(2) and 41.30(b)(2) now state that a container of processed tobacco, the contents of which weigh 10 pounds or less (including any added non-tobacco ingredients or constituents), that is removed within the meaning of this part, is deemed to be a package offered for sale or delivery to the ultimate consumer. The same exceptions are provided in those regulatory sections to recognize that manufacturers and importers of processed tobacco may remove processed tobacco in small amounts for purposes related to the business of a manufacturer or importer of processed tobacco; the exceptions allow the removal of such processed tobacco without that removal being deemed a removal of a taxable product and triggering the tax. The added text in §§ 40.25a(b)(2) and 41.30(b)(2) is for ease of reference.
- In § 40.256, the reference to ''§ 40.61(b)'' is corrected, so that it reads ''§ 40.61(c).''
- In § 40.521(a), TTB is removing the requirement to keep records showing the quantity of processed tobacco processed, because we believe this requirement could result in counting the same tobacco multiple times where the tobacco is subject to more than one processing activity.
- In § 40.521, paragraphs (b)(6) and (b)(7) are removed, thereby removing the requirement that manufacturers of processed tobacco obtain a declaration by the purchaser of the processed tobacco of the specific purposes for the purchase and a declaration by the purchaser of the name and address of the principal if the purchaser is acting as an agent. TTB has not to date obtained any useful information from

such requirements. Corresponding changes are made to the recordkeeping requirements applicable to importers of processed tobacco at §§ 41.261(b)(6) and (b)(7).

• In § 40.531, which concerns approvals of alternate methods or procedures for manufacturers of processed tobacco, TTB is amending paragraph (a)(2) by adding a reference to affording equivalent security to the revenue, as an additional condition for TTB approval.

• A new § 41.203a is added to correct an oversight. Importers of tobacco products are subject, under 26 U.S.C. 5713(b), to the same permit suspension and revocation provisions as those in the regulations applicable to manufacturers of tobacco products and processed tobacco and to importers of processed tobacco, at 27 CFR 40.332, 40.528, and 41.273 respectively. However, no such provision mirroring this statutory text appears in the current regulations applicable to importers of tobacco products. The new section sets forth permit suspension and revocation provisions for importers of tobacco products that mirror the permit suspension and revocation provisions for importers of processed tobacco in § 41.273.

• In 27 CFR 41.232, TTB is adding language to clarify that, although the permit of an importer of tobacco products can be amended to allow for the importer to import processed tobacco under the same permit, that importer qualifies to do so only when TTB authorization of the amendment is received in response to the application.

• Finally, TTB has made several non-substantive editorial changes to improve the readability and the clarity of the regulatory texts that appear in this document.

Adoption of Final Rule

Based on the foregoing, TTB has determined that the temporary regulations published in T.D. TTB–78 and T.D. TTB–81 should be adopted as a final rule with the changes discussed above.

Regulatory Flexibility Act

We certify that these regulations will not have a significant economic impact on a substantial number of small entities. The regulatory obligations and relevant collections of information which are the subject of this rule derive directly from the Internal Revenue Code of 1986, as amended, and the regulations in this rule concerning these obligations and collections merely implement and provide necessary standards for complying with the statutory requirements. Likewise, any secondary or incidental effects, and any reporting, recordkeeping, or other compliance burdens flow directly from the statute. Accordingly, a regulatory flexibility analysis is not required.

Paperwork Reduction Act

TTB has provided estimates of the burden that the collection of information contained in these regulations imposes, and the estimated burden has been reviewed and approved by the Office of Management and Budget (OMB) in accordance with the Paperwork Reduction Act of 1995 (44 U.S.C. 3507) and assigned control numbers 1513–0024, 1513–0032, 1513–0033, 1513–0035, 1513–0068, 1513–0070, 1513–0078, 1513–0106, 1513–0107, and 1513–0130. TTB notes that this final rule contains a number of amendments to the regulations that alleviate the recordkeeping and reporting required by the temporary rule that this document replaces. In several provisions, alternate procedures are provided that allow for monthly summary reporting rather than daily or per-shipment reporting, and in two provisions, the requirement to record certain information has been removed. In addition, this final rule allows manufacturers of processed tobacco to submit one permit application to cover all locations at which they conduct business, rather than one application for each location. This final rule does, however, add an additional requirement that manufacturers and importers of processed tobacco submit location information to TTB as part of the permit application. This information was not previously specifically required under the regulations but could have been required by TTB under its authority to require submission of any ''additional information'' required to determine whether an applicant is entitled to a permit. (Set forth at 27 CFR 40.497 and 41.237.). This final rule reinstitutes recordkeeping of certain unprocessed tobacco and also extends certain inventory requirements to importers of processed tobacco.

Under the Paperwork Reduction Act of 1995, an agency may not conduct or sponsor, and a person is not required to respond to, a collection of information unless it displays a valid OMB control number. Comments concerning suggestions for reducing the burden of the collections of information in this document should be directed to Mary A. Wood, Alcohol and Tobacco Tax and Trade Bureau, using any of these points of contact:

• P.O. Box 14412, Washington, DC 20044–4412;

• 202–453–2686 (facsimile); or

• *formcomments@ttb.gov* (email).

Effective Date

This document finalizes temporary regulations that were effective on June 22, 2009, which implemented changes made to the Internal Revenue Code of 1986 by the Children's Health Insurance Program Reauthorization Act of 2009. Because industry members have been operating for almost three years under the temporary regulations finalized in this document, and because many of the final regulations set forth in this document lessen reporting and recordkeeping burdens for industry members, TTB finds good cause under 5 U.S.C. 553(d)(3) to dispense with the effective date limitation in 5 U.S.C. 553(d). This final rule will be effective on June 21, 2012.

Executive Order 12866

It has been determined that this rule is not a significant regulatory action as defined in E.O. 12866. Therefore, it requires no regulatory assessment.

Drafting Information

This document was drafted by several members of the Regulations and Rulings Division, Alcohol and Tobacco Tax and Trade Bureau, with assistance from personnel in other divisions within TTB.

List of Subjects

27 CFR Part 40

Cigars and cigarettes, Claims, Electronic funds transfers, Excise taxes, Imports, Labeling, Packaging and containers, Processed tobacco, Reporting and recordkeeping requirements, Surety bonds, Tobacco products.

27 CFR Part 41

Cigars and cigarettes, Claims, Customs duties and inspection, Electronic funds transfers, Excise taxes, Imports, Labeling, Packaging and containers, Puerto Rico, Reporting and recordkeeping requirements, Surety bonds, Tobacco, Virgin Islands, Warehouses.

The Regulatory Amendment

For the reasons discussed in the preamble, the temporary regulations published in the **Federal Register** at 74 FR 29401 on June 22, 2009, as T.D. TTB–78, the temporary regulations published in the **Federal Register** at 74 FR 37551 on July 29, 2009, as T.D. TTB–80, and the temporary regulations published in the **Federal Register** at 74 FR 48650 on September 24, 2009, as T.D. TTB–81, are adopted as final, with

the changes as discussed above and set forth below:

PART 40—MANUFACTURE OF TOBACCO PRODUCTS, CIGARETTE PAPERS AND TUBES, AND PROCESSED TOBACCO

■ 1. The authority citation for part 40 continues to read as follows:

Authority: 26 U.S.C. 448, 5701–5705, 5711–5713, 5721–5723, 5731–5734, 5741, 5751, 5753, 5761–5763, 6061, 6065, 6109, 6151, 6301, 6302, 6311, 6313, 6402, 6404, 6423, 6676, 6806, 7011, 7212, 7325, 7342, 7502, 7503, 7606, 7805, 31 U.S.C. 9301, 9303, 9304, 9306.

§ 40.11 [Amended]

■ 2. In § 40.11:

■ a. The definition of ''package'' is amended by adding, after the word ''part,'' the words ''for any purpose other than destruction, export, delivery as a sample to a manufacturer of processed tobacco or tobacco products for the purpose of soliciting orders of processed tobacco, or scientific testing or testing of equipment which results in the destruction of the processed tobacco or the return of the processed tobacco to the factory premises,'' and by adding, at the end, the sentence, ''For appropriate tax rate, see § 40.25a.'';

■ b. The definition of ''packaging'' is amended by removing the word ''The'' and adding, in its place, the words, ''When used in the context of an action, the''; and

■ c. The definition of ''sale price'' is amended by adding, after the words ''sold by the'', the words ''U.S.''.

§ 40.25a [Amended]

■ 3. In § 40.25a:

■ a. Paragraph (b)(2) is amended by adding a sentence at the end to read as follows: ''A container of processed tobacco, the contents of which weigh 10 pounds or less (including any added non-tobacco ingredients or constituents), that is removed within the meaning of this part for any purpose other than destruction, export, delivery as a sample to a manufacturer of processed tobacco or tobacco products for the purpose of soliciting orders of processed tobacco, or scientific testing or testing of equipment which results in the destruction of the processed tobacco or the return of the processed tobacco to the factory premises, is deemed to be a package offered for sale or delivery to the ultimate consumer.''

■ b. Paragraph (b)(3)(ii) is amended by adding two sentences at the end to read as follows: ''The term 'accompanying materials' includes, but is not limited to, any point of sale advertising or other printed product communications issued by the manufacturer or importer of pipe tobacco products. In addition, the inclusion of cigarette papers or tubes in a package bearing a 'pipe tobacco' declaration will suggest a use other than pipe tobacco.''

■ 4. In § 40.47, paragraph (b) is revised to read as follows:

§ 40.47 Other businesses within factory.

* * * * *

(b) *Processed tobacco.* A manufacturer of tobacco products may engage in certain activities related to processed tobacco without an approval under paragraph (a) of this section. Section 40.72(b) specifies the activities and circumstances that do not require authorization to engage in another business as well as those activities and circumstances that do.

■ 5. In § 40.72, paragraph (b) is revised to read as follows:

§ 40.72 Use of factory premises.

* * * * *

(b) *Processed tobacco.* (1) A manufacturer of tobacco products that processes tobacco or receives processed tobacco on its factory premises solely for use in the manufacture of tobacco products under its permit, that removes processed tobacco from the factory premises only for purposes related to its business of manufacturing tobacco products as set forth in (b)(2) of this section, and that maintains records sufficient to show the final disposition of any processed tobacco removed from the factory premises may engage in such activities on the factory premises under the authority of its existing permit without prior authorization from TTB under § 40.47. If a manufacturer of tobacco products removes processed tobacco for purposes other than those specified in paragraph (b)(2) of this section, that manufacturer must obtain prior authorization from TTB in accordance with § 40.47 and must keep records and submit reports as prescribed in §§ 40.521 and 40.522.

(2) The following activities are considered to be activities related to the manufacture of tobacco products: Removal of samples of processed tobacco for the purpose of soliciting orders of tobacco products; removal of processed tobacco for destruction; removal of processed tobacco for scientific testing or testing of equipment which results in the destruction of the processed tobacco or the return of the processed tobacco to the factory premises; and transfer of processed tobacco between permitted premises of the same manufacturer. Any removal of processed tobacco other than those listed above requires the manufacturer to first obtain authorization to engage in another business within the factory under § 40.47 and to keep records and submit reports under §§ 40.521 and 40.522, unless the manufacturer can show to the satisfaction of the appropriate TTB officer that the removal is connected with the business of a manufacturer of tobacco products rather than with the business of a manufacturer of processed tobacco.

■ 6. Section 40.182 is revised to read as follows:

§ 40.182 Record of tobacco and processed tobacco.

(a) Except as provided in paragraph (b) of this section, a manufacturer of tobacco products must maintain a record that shows the total quantity in pounds of all:

(1) Processed tobacco on hand at the beginning of each month;

(2) Processed tobacco received, together with the name and address of the person from whom received and the date of receipt;

(3) Processed tobacco used in the manufacture of tobacco products, together with the date of use;

(4) Processed tobacco lost, together with the date and other circumstances of the loss;

(5) Processed tobacco destroyed, together with the date and other circumstances of the destruction;

(6) Processed tobacco removed, together with the date of the removal and reason for the removal; and

(7) Tobacco (unprocessed) on hand at the beginning of each month and used in the manufacture of tobacco products, lost, destroyed, or removed during each month.

(b) A manufacturer of tobacco products that is required to obtain authorization to engage in another business within the factory under §§ 40.47(b) and 40.72(b) must keep records as prescribed in § 40.521, in addition to those required elsewhere in this part.

(Approved by the Office of Management and Budget under control number 1513–0068)

■ 7. In § 40.202, paragraph (b) and the parenthetical OMB approval are revised to read as follows:

§ 40.202 Reports.

* * * * *

(b) *Report of processed tobacco.* In addition to complying with the requirements set forth in this part relating to the reporting of tobacco products, a manufacturer of tobacco products that is required to obtain authorization to engage in another

business within the factory under §§ 40.47(b) and 40.72(b) must also make and submit reports as prescribed in § 40.522.

(Approved by the Office of Management and Budget under control number 1513–0033)

§ 40.256 [Amended]

■ 8. In § 40.256, the first sentence is amended by removing the reference ''§ 40.61(b)'' and adding, in its place, the reference ''§ 40.61(c)''.

■ 9. Section 40.491(b)(3) is revised to read as follows:

§ 40.491 Factory premises.

* * * * *

(b) * * *

(3) Any person that holds a TTB permit for the manufacture of tobacco products and that removes processed tobacco from the factory must apply for authorization to engage in that activity, when required to do so under § 40.47.

■ 10. A new § 40.502 is added under the undesignated center heading ''Qualification Requirements for Manufacturers of Processed Tobacco'' to read as follows:

§ 40.502 Factory premises.

(a) *General.* The premises used by a manufacturer of processed tobacco to conduct such business must be described on its permit and such premises must include any physical location or building used for: Manufacturing and storing processed tobacco; storing materials, equipment, and supplies related to or used in the manufacturing and storage of processed tobacco; and carrying on activities in connection with the manufacturing and storage of processed tobacco. The premises may consist of more than one building, or portions of buildings, which need not be contiguous or located in the same city, town, village, or State. The manufacturer must designate a central location as a repository for the records required under this subpart. The application for the permit filed under § 40.492 must describe the buildings or portions of buildings by street address (number, street, city or equivalent, and State). The permit application must include a diagram, in duplicate, showing the following information, if applicable:

(1) The identification of each building by a letter, number, or similar designation if the factory is in more than one building and each building is not identifiable by a separate street address; and

(2) The particular floor or floors, or room or rooms, comprising the factory if the factory consists of, or includes, a portion of a building or portions of buildings.

(b) *Permits issued prior to June 21, 2012.* A manufacturer of processed tobacco operating under a permit issued prior to June 21, 2012, must submit the information required under paragraph (a) of this section within 180 days after June 21, 2012.

(c) *Extension or curtailment of factory.* If a manufacturer of processed tobacco wishes to change the premises delineated by its permit to an extent that would be inconsistent with the description or diagram of the premises that was submitted with the manufacturer's last permit application, the manufacturer must submit an application on TTB Form 5200.16 for, and obtain, an amended permit before the change in the premises occurs. The application must describe the proposed change in the premises and must be accompanied by a new diagram if required under paragraph (a) of this section.

■ 11. Section 40.521 is revised to read as follows:

§ 40.521 Record of tobacco and processed tobacco.

(a) Every manufacturer of processed tobacco and every manufacturer of tobacco products required to obtain authorization to engage in another business within the factory under §§ 40.47(b) and 40.72(b) of this part must keep records of operations and transactions that show the total quantity of all:

(1) Processed tobacco on hand at the beginning of each month;

(2) In the case of a manufacturer of tobacco products, processed tobacco used in the manufacture of tobacco products during each month;

(3) Processed tobacco received, together with the date of receipt and the name and address of the person from whom it was received;

(4) Processed tobacco removed from the factory for shipment to a person holding a TTB permit as a manufacturer of processed tobacco, as a manufacturer of tobacco products, as an importer of processed tobacco, or as an export warehouse proprietor, together with the date of removal and the name and address of the person to whom shipped or delivered;

(5) Processed tobacco removed from the factory for shipment, other than for export, to a person not holding a TTB permit as a manufacturer of processed tobacco, as a manufacturer of tobacco products, as an importer of processed tobacco, or as an export warehouse proprietor, together with the date of removal;

(6) Processed tobacco removed from the factory for export, together with the date of removal;

(7) Processed tobacco removed for any purpose not referred to in paragraphs (a)(4), (5), (6), and (7) of this section, together with the date of removal;

(8) Processed tobacco lost, together with the date and other circumstances of the loss;

(9) Processed tobacco destroyed (either on factory premise or removed from factory premises for destruction), together with the date and other circumstances of the destruction;

(10) Processed tobacco transferred between buildings that are covered under the same permit but that are not located in the same city, town, village, or State; and

(11) Tobacco (unprocessed) on hand at the beginning of each month and used in the manufacture of tobacco products, lost, destroyed, or removed during each month.

(b) Any manufacturer of processed tobacco and any manufacturer of tobacco products that are required to obtain authorization to engage in another business within the factory under §§ 40.47(b) and 40.72(b) and that engage in removals of processed tobacco described in paragraph (a)(5) or (a)(6) of this section must also keep records that show the following information about each such removal:

(1) The full name and business address (including city and State) of the purchaser (if there is a purchaser) and the full name and business address of the recipient, or personal address if the purchaser or recipient is not a business;

(2) The full name, business address (including city and State), and driver's license number of the person picking up the processed tobacco for delivery;

(3) The license number of the vehicle in which the processed tobacco is removed from the manufacturer's premises;

(4) The street address of the destination (not including any in-transit stops) of the processed tobacco; and

(5) The quantity of processed tobacco in the shipment;

(c) The entries in the records of removals required under this section must be made for each day by the close of the business day following the day on which the removal occurs. There is no particular format prescribed for the records required under this section (and commercial records may be used) although the required information must be readily ascertainable from the records kept. In the case of a removal under paragraph (a)(5) or (a)(6) of this section that involves shipment by a common carrier, the appropriate TTB officer may

approve an alternate method or procedure pursuant to §§ 40.45 or 40.531 through which the manufacturer may keep records regarding the common carrier and its means of tracking (including pick up and delivery) of the shipment in lieu of the information required by paragraphs (b)(2) and (b)(3) of this section.

■ 12. In § 40.522, paragraph (d) is revised to read as follows:

§ 40.522 Reports.

* * * * *

(d) *Reports of removals.* (1) Except as otherwise provided in paragraphs (d)(2) or (d)(3) of this section, a manufacturer who removes processed tobacco for export or for shipment to someone other than a person holding a TTB permit as a manufacturer of processed tobacco, as a manufacturer of tobacco products, as an importer of processed tobacco, or as an export warehouse proprietor must report each such removal on TTB F 5250.2 by the close of the next business day following the day of removal, in accordance with the instructions on the form.

(2) In the case of removals for export, as an alternative to the procedure prescribed in paragraph (d)(1) of this section, the manufacturer may submit to TTB a monthly summary report of such removals in a format approved by the appropriate TTB officer. Prior to the use of such an alternate procedure, the manufacturer must obtain written approval from the appropriate TTB officer.

(3) A manufacturer of tobacco products who removes processed tobacco for any of the purposes related to the manufacture of tobacco products set forth under § 40.72(b)(2) is not required to report such removals on TTB F 5250.2. Records of such removals must still be kept pursuant to § 40.521.

* * * * *

§ 40.531 [Amended]

■ 13. In § 40.531, paragraph (a)(2) is amended by removing the word ‘‘, and’’ at the end and adding in its place, the words ‘‘and affords equivalent security to the revenue; and’’.

PART 41—IMPORTATION OF TOBACCO PRODUCTS, CIGARETTE PAPERS AND TUBES, AND PROCESSED TOBACCO

■ 14. The authority citation for part 41 continues to read as follows:

Authority: 26 U.S.C. 5701–5705, 5708, 5712, 5713, 5721–5723, 5741, 5754, 5761–5763, 6301, 6302, 6313, 6402, 6404, 7101, 7212, 7342, 7606, 7651, 7652, 7805; 31 U.S.C. 9301, 9303, 9304, 9306.

§ 41.11 [Amended]

■ 15. In § 41.11, the definition of ‘‘package’’ is amended by adding, after the word ‘‘part’’ the words ‘‘for any purpose other than destruction, export, delivery as a sample to a manufacturer of processed tobacco or tobacco products for the purpose of soliciting orders of processed tobacco, or for scientific testing or testing of equipment that results in the destruction of the processed tobacco or the return of the processed tobacco,’’ and by adding, at the end, the sentence, ‘‘For appropriate tax rate, see § 41.30.’’; and the definition of ‘‘packaging’’ is amended by removing the word ‘‘The’’ and adding, in its place, the words, ‘‘When used in the context of an action, the’’.

§ 41.30 [Amended]

■ 16. In § 41.30:

■ a. Paragraph (b)(2) is amended by adding a sentence at the end to read as follows: ‘‘A container of processed tobacco, the contents of which weigh 10 pounds or less (including any added non-tobacco ingredients or constituents), that is removed within the meaning of this part for any purpose other than destruction, export, delivery as a sample to a manufacturer of processed tobacco or tobacco products for the purpose of soliciting orders of processed tobacco, or for scientific testing or testing of equipment that results in the destruction of the processed tobacco or the return of the processed tobacco, is deemed to be a package offered for sale or delivery to the ultimate consumer.’’

■ b. Paragraph (b)(3)(ii) is amended by adding two sentences at the end to read as follows: ‘‘The term ‘accompanying materials’ includes, but is not limited to, any point of sale advertising or other printed product communications issued by the manufacturer or importer of pipe tobacco products. In addition, the inclusion of cigarette papers or tubes in a package bearing a ‘pipe tobacco’ declaration will suggest a use other than pipe tobacco.’’

■ 17. New § 41.203a, is added immediately before the undesignated center heading ‘‘Required Records and Reports’’ to read as follows:

§ 41.203a Suspension and revocation of permit.

When the appropriate TTB officer has reason to believe that an importer of tobacco products has not in good faith complied with the provisions of 26 U.S.C. chapter 52, and regulations thereunder, or with any other provision of 26 U.S.C. with intent to defraud, or has violated any condition of the permit, or has failed to disclose any material information required or made any material false statement in the application for the permit, or is, by reason of previous or current legal proceedings involving a felony violation of any other provision of Federal criminal law relating to tobacco products, processed tobacco, cigarette paper, or cigarette tubes, not likely to maintain operations in compliance with 26 U.S.C. chapter 52, or has been convicted of a felony violation of any provision of Federal or State criminal law relating to tobacco products, processed tobacco, cigarette paper, or cigarette tubes, the appropriate TTB officer shall issue an order, stating the facts charged, citing such person to show cause why the permit should not be suspended or revoked. Such citation shall be issued and opportunity for hearing afforded in accordance with part 71 of this chapter, which part is applicable to such proceedings. If, after hearing, the Administrative Law Judge, or on appeal, the Administrator, finds that such person has not shown cause why the permit should not be suspended or revoked, such permit shall be suspended for such period as the appropriate TTB officer deems proper or shall be revoked.

■ 18. In § 41.232, paragraph (b) is amended by adding, before the period, the words, ‘‘and receiving TTB authorization’’.

■ 19. Section 41.237 is amended by designating the existing text as paragraph (a), adding a heading to newly designated paragraph (a), and adding a new paragraph (b). The additions read as follows:

§ 41.237 Additional information.

(a) *General.* * * *

(b) *Business premises.* Every person that files an application for a permit required by § 41.231 as an importer of processed tobacco must furnish, with its application for the permit, the address to be used as the principal business office where the records and reports required by the subpart must be maintained pursuant to § 41.263. The applicant must also include the location (by physical address or other means if there is no physical address) of any premises used for the storage of processed tobacco imported or received. For permits issued prior to June 21, 2012, the permittee has 180 days from June 21, 2012, to submit the information required under this paragraph.

■ 20. In § 41.253, a sentence is added at the end to read as follows:

§ 41.253 Change in location or address.

* * * Whenever the importer wishes to change the location of the premises

used for the storage of processed tobacco imported or received by the importer to an extent that would be inconsistent with the location information submitted with the importer's last permit application, the importer must apply for, and obtain, an amended permit before such a change in premises takes place.

■ 21. In § 41.261:

■ a. Paragraph (a)(2) is amended by adding at the end before the semicolon the words ‘‘, together with the name and address of the person from whom it was received’’;

■ b. Paragraph (a)(3) is amended by adding at the end before the semicolon the words ‘‘or exported’’;

■ c. Paragraph (a)(5) is amended by removing the word ‘‘Transferred’’ and adding, in its place, the words ‘‘Except in the case of returns to customs custody or exportations, transferred’’;

■ d. Paragraph (a)(6) is amended by removing the period at the end and adding in its place the word ‘‘; and’’;

■ e. New paragraph (a)(7) is added;

■ f. Paragraph (b)(1) is amended by removing the words ‘‘address (including city and State) of the purchaser (or recipient, if there is no purchaser)’’ and adding, in their place, the words ‘‘business address (including city and State) of the purchaser (if there is a purchaser) or the full name and business address of the recipient (if there is no purchaser), or personal address if the purchaser or recipient is not a business’’;

■ g. Paragraph (b)(2) is amended by adding before the word ‘‘address’’ the word ‘‘business’’;

■ h. Paragraph (b)(5) is amended by removing the semicolon and adding in its place a period;

■ i. Paragraphs (b)(6), (b)(7), and (d) are removed; and

■ j. Paragraph (c) is revised.

The revision and addition read as follows:

§ 41.261 Records.

(a) * * *

(7) Transferred between buildings that are covered under the same permit but that are not located in the same city, town, village, or State.

* * * * *

(c) The entries in the records required under this section must be made for each day by the close of the business day following the day on which the transfer or sale occurs. There is no particular format prescribed for the records required under this section (and commercial records may be used), although the required information must be readily ascertainable from the records kept. In the case of a removal under paragraph (a)(5) of this section that involves shipment by a common carrier, the appropriate TTB officer may approve an alternate method or procedure pursuant to § 41.26 of this part through which the importer may keep records regarding the common carrier and its means of tracking (including pick up and delivery) of the shipment in lieu of the information required by paragraphs (b)(2) and (b)(3) of this section. No records are required to be kept under this part regarding processed tobacco within customs custody, although this will not preclude TTB review of records related to such processed tobacco as may be appropriate for purposes of the enforcement of the provisions of this part.

* * * * *

■ 22. In § 41.262, paragraph (a) is amended by adding at the end of the paragraph the sentence, ‘‘The importer need not include in the reports under this part information regarding processed tobacco that is in customs custody.’’; and paragraph (d) is revised to read as follows:

§ 41.262 Reports.

* * * * *

(d) *Reports of sales and transfers.* (1) Except as otherwise provided in paragraph (d)(2) of this section, an importer that exports processed tobacco or transfers or sells processed tobacco to someone other than a person holding a permit as an importer or manufacturer of processed tobacco or tobacco products or as an export warehouse proprietor must report each such exportation, sale, or transfer on TTB F 5250.2 by the close of the next business day following the day of exportation, sale, or transfer, in accordance with the instructions on the form.

(2) In the case of removals for export, as an alternative to the procedure prescribed in paragraph (d)(1) of this section, the importer may submit to TTB monthly summary reports of such removals in a format approved by the appropriate TTB officer. Prior to the use of such an alternate procedure, the importer must obtain written approval from the appropriate TTB officer.

(3) An importer that ships or transfers processed tobacco for scientific testing or testing of equipment which results in the destruction of the processed tobacco or the return of the processed tobacco is not required to report such shipment or transfer on TTB F 5250.2.

* * * * *

■ 23. New § 41.264 is added immediately after § 41.263, to read as follows:

§ 41.264 Inventories.

Every importer of processed tobacco must provide a true and accurate inventory of any processed tobacco stored on premises designated pursuant to § 41.237. The importer must make such an inventory at the time of commencing business, at the time of transferring ownership, at the time of changing the location of facilities in which processed tobacco is stored, at the time of concluding business, and at such other time as the appropriate TTB officer may require. A specific format is not prescribed. For permits issued prior to June 21, 2012, the permittee has 180 days from June 21, 2012, to make an inventory as required under this paragraph.

Signed: April 12, 2012.

John J. Manfreda,

Administrator.

Approved: June 12, 2012.

Timothy E. Skud,

Deputy Assistant Secretary (Tax, Trade, and Tariff Policy).

[FR Doc. 2012–15190 Filed 6–20–12; 8:45 am]

BILLING CODE 4810–31–P

DEPARTMENT OF HOMELAND SECURITY

Coast Guard

33 CFR Parts 1, 2, 27, 40, 45, 66, 80, 83, 84, 85, 100, 101, 110, 114, 115, 116, 117, 118, 136, 138, 162, 165, and 177

[Docket No. USCG–2012–0306]

RIN 1625–AB86

Navigation and Navigable Waters; Technical, Organizational, and Conforming Amendments

AGENCY: Coast Guard, DHS.

ACTION: Final rule.

SUMMARY: This rule makes non-substantive changes throughout title 33 of the Code of Federal Regulations. The purpose of this rule is to make conforming amendments and technical corrections to Coast Guard navigation and navigable waters regulations. This rule will have no substantive effect on the regulated public. These changes are provided to coincide with the annual recodification of title 33 on July 1, 2012.

DATES: This final rule is effective June 21, 2012.

ADDRESSES: Documents mentioned in this preamble as being available in the

docket are part of docket USCG–2012–0306 and are available for inspection or copying at the Docket Management Facility (M–30), U.S. Department of Transportation, West Building Ground Floor, Room W12–140, 1200 New Jersey Avenue SE., Washington, DC 20590, between 9 a.m. and 5 p.m., Monday through Friday, except Federal holidays. You may also find this docket on the Internet by going to *http://www.regulations.gov,* inserting USCG–2012–0306 in the ''Keyword'' box, and then clicking ''Search.''

FOR FURTHER INFORMATION CONTACT: If you have questions on this rule, call or email Leo Huott, Coast Guard; telephone 202–372–1027, email *Leo.S.Huott@uscg.mil.* If you have questions on viewing the docket, call Renee V. Wright, Program Manager, Docket Operations, telephone 202–366–9826.

SUPPLEMENTARY INFORMATION:

Table of Contents for Preamble

I. Abbreviations
II. Regulatory History
III. Background
IV. Basis and Purpose
V. Regulatory Analyses
A. Regulatory Planning and Review
B. Small Entities
C. Assistance for Small Entities
D. Collection of Information
E. Federalism
F. Unfunded Mandates Reform Act
G. Taking of Private Property
H. Civil Justice Reform
I. Protection of Children
J. Indian Tribal Governments
K. Energy Effects
L. Technical Standards
M. Environment

I. Abbreviations

DHS Department of Homeland Security
CFR Code of Federal Regulations
DOT Department of Transportation
FR **Federal Register**
TSA Transportation Security Administration
OFR Office of the Federal Register
U.S.C. United States Code

II. Regulatory History

We did not publish a notice of proposed rulemaking for this rule. Under 5 U.S.C. 553(b)(A), the Coast Guard finds this rule is exempt from notice and comment rulemaking requirements because these changes involve rules of agency organization, procedure, or practice. In addition, the Coast Guard finds notice and comment procedures are unnecessary under 5 U.S.C. 553(b)(B) as this rule consists only of corrections and editorial, organizational, and conforming amendments and these changes will have no substantive effect on the public. Under 5 U.S.C. 553(d)(3), the Coast Guard finds that, for the same reasons, good cause exists for making this rule effective upon publication in the **Federal Register**.

III. Background

Each year, the printed edition of title 33 of the Code of Federal Regulations (CFR) is recodified on July 1. This rule, which is effective June 21, 2012, makes technical and editorial corrections throughout title 33. This rule does not create any substantive requirements.

IV. Basis and Purpose

This rule amends 33 CFR part 1 to reflect changes in agency organization by adding the authority for District Commanders to establish inland waterways navigation regulations within their areas of responsibility. In 1999, the Commandant delegated the authority to promulgate regulations under 33 U.S.C. 162, Inland Waterways Navigation Regulations, to District Commanders without further redelegation. This amendment codifies this Commandant delegation.

Additionally, in 33 CFR part 1, the authority section in subpart 1.07 is updated to reflect current authorities. The following citations are being removed since these are citations with authorities under the Department of Transportation (DOT), which no longer apply to the Coast Guard: Sec. 6079(d), Public Law 100–690, 102 Stat. 4181, and 49 CFR 1.46. The following citations are added to the authorities since these citations are more relevant to the current civil penalty process: 14 U.S.C. 92(e), 33 U.S.C. 1321(b)(6)(B), 46 U.S.C. 2103, and Department of Homeland Security Delegation No. 0170.1.

This rule amends § 2.30(b) to reflect the correct citation to article 55 of the 1982 United Nations Convention on the Law of the Sea. We are removing the citation to article 56 because it speaks to the rights, jurisdiction, and duties of the coastal state in the exclusive economic zone, but does not reference the definition of exclusive economic zones. Article 55 sets out the definition of an exclusive economic zone, and is the article relevant to this section.

This rule revises 33 CFR part 27 to remove all references to 33 U.S.C. 1319. This statute does not govern the Coast Guard so we may not authorize a civil monetary penalty under it. This section also informs the public of the maximum civil monetary penalties authorized under 33 U.S.C. 3852 and 46 U.S.C. 70506.

This rule revises 33 CFR parts 40 and 45 to reflect changes in agency organization by removing 49 CFR 1.46(b) from the authority sections in these parts. Because the Coast Guard is no longer a component of DOT, delegations from the Secretary of DOT no longer apply. The regulation at 49 CFR 1.46(b) currently addresses delegations to the Administrator of the Research and Innovative Technology Administration, which is a DOT office.

This rule revises § 66.01–1 by moving current paragraph (a) to paragraph (a) of § 66.10–1, which is the proper location. Due to a clerical error, the current § 66.01–1 paragraph (a) mistakenly replaced the former paragraph (a) in that section. We are now correcting that error and restoring the former paragraph (a) to § 66.01–1 and moving current paragraph (a) in § 66.01–1 to its correct location as paragraph (a) of § 66.10–1.

This rule amends § 80.825 by removing paragraphs (d) and (e) from this section. In 1990, the boundary lines of the Mississippi Passes, Louisiana were redrawn. The coordinates now located in paragraphs (d) and (e) are encompassed by the new boundary lines found in paragraphs (a) through (c) so we are removing these superfluous coordinates in paragraphs (d) and (e).

This rule corrects non-substantive typographical and spelling errors in 33 CFR part 83. In § 83.10, a space has been removed between the heading of the paragraph and the body of the paragraph. In § 83.27, a space has been added between ''mine'' and ''clearance'' to make them two separate words.

This rule corrects non-substantive typographical and spelling errors in 33 CFR part 84. In § 84.01, to avoid any printing confusing, cubic meters is replacing meters$_3$. Paragraphs and subparagraphs in § 84.03 and § 84.07 use the incorrect Office of the Federal Register (OFR) numbering scheme. The incorrect numbering scheme is being replaced. In § 84.15, there is a formula for intensity of lights. Following this formula, each letter in the formula is defined. A colon is being inserted after each letter representation and a hard return is added following each colon. The word ''two'' is incorrectly spelled as ''tow'' in § 84.17 so the word ''two'' is being corrected.

This rule corrects non-substantive typographical and spelling errors in 33 CFR part 85. Paragraphs and subparagraphs in § 85.1 use the incorrect OFR numbering scheme. The incorrect numbering scheme is being replaced.

This rule corrects non-substantive typographical and spelling errors in 33 CFR part 100. Table 1 in § 100.901 identifies Buffalo as a ''Group'' not a ''Sector.'' This is an incorrect identification so this section is being

revised to reflect ''Sector.'' ''Bell'' and ''Russel'' are incorrectly spelled in §§ 100.912 and 100.916, respectively. The correct spellings of ''Belle'' and ''Russell'' are being inserted.

This rule revises 33 CFR part 101 to remove a reference to an outdated assessment tool. On May 16, 2012, the Transportation Security Administration (TSA) announced that the TSA Maritime Self-Assessment Risk Module, developed to support the Coast Guard's regulatory efforts promulgated pursuant to the Maritime Transportation Security Act of 2002, will no longer be available. Since this assessment tool will no longer be available, the reference to this tool in section 101.510(a) must be removed.

This rule amends 33 CFR part 110 to reflect changes in geographic coordinates and command boundaries. Based on a previous technical amendment, several geographic coordinates were updated in § 110.60. Several notes in § 110.155 refer back to § 110.60. Therefore, since several geographic coordinates changed in § 110.60, the notes in § 110.155 also need to reflect that change. Additionally, in 1996, the command boundaries for the Captain of the Port Long Island were redrawn. Because of this, the anchorage areas in Randall Bay, Freeport, and Long Island were redrawn under the command of the Captain of the Port Long Island. Section 110.156 is being updated to reflect this command change.

The authority section in 33 CFR part 110 is also revised to correct a citation. The delegation of rulemaking authority to establish anchorages is cited incorrectly as 33 CFR 1.05–1(g). The citation is being changed to reflect that 33 CFR 1.05–1 is the correct authority.

This rule revises the definitional section in § 114.05 to reflect the format in the definitions in § 117.4. The letter designations, including the period after each word, are removed. The definitions will now read as sentences beginning with the word to be defined. The format used in the definitional section in § 117.4 is preferred and this change will create format consistency in the two sections.

Additionally, this rule revises § 114.20(a) to replace the words ''a tracing'' with the words ''as-built plans.'' This change does not change the substance of the regulation but replaces a term of art with an updated, more accurate term of art.

This rule revises 33 CFR part 115 to correct grammatically incorrect or passive phrases. In § 115.01, the phrase ''for construction of or modification to'' is replaced with active language, ''to construct or modify.'' The grammar in § 115.05 is corrected by replacing the word ''be'' with ''is.''

In § 115.40, we are replacing the words ''approval of'' with ''a formal permit action from''. This section addresses the fact that bridge repairs do not require permitting if they only replace worn or obsolete parts of an already-approved bridge. ''Approved'' is already used in the short paragraph and ''a formal permit action'' is a more accurate description of the Coast Guard's role. Therefore, this section has been changed to incorporate permit instead of approval.

In § 115.50, we are changing the word ''referred'' to ''refer'' as it is grammatically correct.

In § 115.60, the word ''construction'' is removed from the heading. This section focuses on applications for permits to construct, modify, or replace bridges. The word ''construction'' in the title does not accurately indicate the breadth of the regulation so the word is being removed. Also, in paragraph (d) of this section, we are removing a comma after the word ''disapproval'' since the comma makes the sentence grammatically incorrect.

This rule corrects non-substantive typographical and spelling errors in 33 CFR part 116. In § 116.15(a), we are replacing ''Bridge Administration Program'' with the correct office designation of ''Office of Bridge Programs.''

This rule amends 33 CFR part 117 to correct the current names of the following bridges with their accurate names: Main Street (U.S. 17) Bridge; Baltimore Harbor-Patapsco Bridge; Debbie's Creek Bridge; SR#543 Bridge; Beaufort Channel, NC Bridge; and Rancocas River (Creek) Bridge. Because we are changing existing bridge names to the accurate names, the headings in §§ 117.325(a), 117.541, 117.715, 117.719, 117.745, 117.822, and 117.823 are changed accordingly, and the sections are redesignated to follow the alphabetical order of state waterways set out in this subpart. Also, in § 117.571, ''4.0'' is changed to ''0.4'' to reflect the correct mile marker. In § 117.965, ''Bay City'' is changed to ''Bridge City'' to reflect the correct location.

The rules in new §§ 117.566 and 117.823 are rewritten to clarify bridge operation and appropriate bridge contacts. Although the substance of the regulations is unchanged, the revisions make them easier to understand.

The rule amends § 118.160 to include the following language in paragraph (b): ''(in the closed to navigation position for drawbridges)''. This language will follow the phrase ''the bridge channel span''. The substance of the rule is not changing, but inserting the additional language makes the regulation clearer.

This rule corrects non-substantive typographical and spelling errors in 33 CFR part 136. There are commas missing from the following sections in part 136: 136.3, 136.5, and 136.101. We are adding commas in the appropriate places in these sections. In § 136.305, we are correcting the spelling of the word ''regarding'', and in that same section, we are replacing ''of'' with ''and'', which is the appropriate conjunction.

This rule corrects non-substantive typographical and spelling errors in 33 CFR part 138. In § 138.20, we are adding missing commas in the appropriate places. Also in that section, we are adding a space between the end of the sentence and the beginning of the next sentence.

This rule corrects non-substantive typographical and spelling errors in 33 CFR part 162. In § 162.120, we are correcting the spelling of two cities' names.

This rule amends 33 CFR 165.941 by removing the word ''fireworks'' from the section heading. This section speaks to safety zones for annual events in the Captain of the Port Detroit Zone. The word ''fireworks'' in the heading does not accurately indicate the breadth of the regulation, which applies to any annual event requiring a safety zone. We are also removing paragraph (a)(5) titled ''Alpena Fireworks, Alpena, MI'' in its entirety, as it is no longer under the responsibility of the Captain of the Port Detroit Zone, and this event was moved to another section by a previous rulemaking. This rule also rewords the notification section in paragraph (f) to clarify already-established Coast Guard practice, stating that the Captain of the Port ''may'' issue, ''if deemed necessary,'' a notice cancelling a safety zone, instead of mandating that he or she issue a notice of cancellation.

We are revising an authority in 33 CFR part 177.09(b)(2) to reflect a correct citation. There is currently a reference to 46 U.S.C., pointing out the authority under which certain civil penalties are assessed. Currently, paragraph (b)(2) makes a general reference to this title but immediately following that, it incorrectly lists title 43 instead of 46. We are changing the misquoted reference to 46 U.S.C.

This rule amends §§ 1.05–1(j), 114.50, 165.920(b), and 100.901 in title 33 to update internal Coast Guard office designations as well as certain personnel titles. Changes in personnel titles included in this rule are only technical revisions reflecting changes in

agency procedures and organization, and do not indicate new authorities.

Finally, this rule amends §§ 114.50, 118.3(b), and 66.01–5 in title 33 to update various physical addresses for Coast Guard offices as well as Web site addresses and contact information.

V. Regulatory Analyses

We developed this rule after considering numerous statutes and executive orders related to rulemaking. Below we summarize our analyses based on 14 of these statutes or executive orders.

A. Regulatory Planning and Review

Executive Orders 12866 (''Regulatory Planning and Review'') and 13563 (''Improving Regulation and Regulatory Review'') direct agencies to assess the costs and benefits of available regulatory alternatives and, if regulation is necessary, to select regulatory approaches that maximize net benefits (including potential economic, environmental, public health and safety effects, distributive impacts, and equity). Executive Order 13563 emphasizes the importance of quantifying both costs and benefits, of reducing costs, of harmonizing rules, and of promoting flexibility.

This rule is not a significant regulatory action under section 3(f) of Executive Order 12866 and does not require an assessment of potential costs and benefits under section 6(a)(3) of that Order. The Office of Management and Budget has not reviewed it under that Order. Because this rule involves non-substantive changes and internal agency practices and procedures, it will not impose any additional costs on the public.

B. Small Entities

Under the Regulatory Flexibility Act (5 U.S.C. 601–612), rules exempt from the notice and comment requirements of the APA are not required to examine the impact of the rule on small entities. Nevertheless, we have considered whether this rule would have a significant economic impact on a substantial number of small entities. The term ''small entities'' comprises small businesses, not-for-profit organizations that are independently owned and operated and are not dominant in their fields, and governmental jurisdictions with populations of less than 50,000.

There is no cost to this rule and we do not expect it to have an impact on small entities because the provisions of this rule are technical and non-substantive. It will have no substantive effect on the public and will impose no additional costs. Therefore, the Coast Guard certifies under 5 U.S.C. 605(b) that this final rule will not have a significant economic impact on a substantial number of small entities.

C. Assistance for Small Entities

Under section 213(a) of the Small Business Regulatory Enforcement Fairness Act of 1996 (Pub. L. 104–121), we want to assist small entities in understanding the rule so that they can better evaluate its effects on them and participate in the rulemaking. If the rule would affect your small business, organization, or governmental jurisdiction and you have questions concerning its provisions or options for compliance, please consult Leo Huott by phone at 202–372–1565 or via email at *Leo.S.Huott@uscg.mil.* The Coast Guard will not retaliate against small entities that question or complain about this rule or any policy or action of the Coast Guard.

Small businesses may send comments on the actions of Federal employees who enforce, or otherwise determine compliance with, Federal regulations to the Small Business and Agriculture Regulatory Enforcement Ombudsman and the Regional Small Business Regulatory Fairness Boards. The Ombudsman evaluates these actions annually and rates each agency's responsiveness to small business. If you wish to comment on actions by employees of the Coast Guard, call 1–888–REG–FAIR (1–888–734–3247).

D. Collection of Information

This rule calls for no new collection of information under the Paperwork Reduction Act of 1995 (44 U.S.C. 3501–3520).

E. Federalism

A rule has implications for federalism under Executive Order 13132, Federalism, if it has a substantial direct effect on State or local governments and would either preempt State law or impose a substantial direct cost of compliance on them. We have analyzed this rule under that Order and have determined that it does not have implications for federalism.

F. Unfunded Mandates Reform Act

The Unfunded Mandates Reform Act of 1995 (2 U.S.C. 1531–1538) requires Federal agencies to assess the effects of their discretionary regulatory actions. In particular, the Act addresses actions that may result in the expenditure by a State, local, or tribal government, in the aggregate, or by the private sector of $100,000,000 (adjusted for inflation) or more in any one year. Though this rule will not result in such an expenditure, we do discuss the effects of this rule elsewhere in this preamble.

G. Taking of Private Property

This rule will not cause a taking of private property or otherwise have taking implications under Executive Order 12630, Governmental Actions and Interference with Constitutionally Protected Property Rights.

H. Civil Justice Reform

This rule meets applicable standards in sections 3(a) and 3(b)(2) of Executive Order 12988, Civil Justice Reform, to minimize litigation, eliminate ambiguity, and reduce burden.

I. Protection of Children

We have analyzed this rule under Executive Order 13045, Protection of Children From Environmental Health Risks and Safety Risks. This rule is not an economically significant rule and does not create an environmental risk to health or risk to safety that may disproportionately affect children.

J. Indian Tribal Governments

This rule does not have tribal implications under Executive Order 13175, Consultation and Coordination With Indian Tribal Governments, because it does not have a substantial direct effect on one or more Indian tribes, on the relationship between the Federal Government and Indian tribes, or on the distribution of power and responsibilities between the Federal Government and Indian tribes.

K. Energy Effects

We have analyzed this rule under Executive Order 13211, Actions Concerning Regulations That Significantly Affect Energy Supply, Distribution, or Use. We have determined that it is not a ''significant energy action'' under that order because it is not a ''significant regulatory action'' under Executive Order 12866 and is not likely to have a significant adverse effect on the supply, distribution, or use of energy. The Administrator of the Office of Information and Regulatory Affairs has not designated it as a significant energy action. Therefore, it does not require a Statement of Energy Effects under Executive Order 13211.

L. Technical Standards

The National Technology Transfer and Advancement Act (NTTAA) (15 U.S.C. 272 note) directs agencies to use voluntary consensus standards in their regulatory activities unless the agency provides Congress, through the Office of Management and Budget, with an

explanation of why using these standards would be inconsistent with applicable law or otherwise impractical. Voluntary consensus standards are technical standards (e.g., specifications of materials, performance, design, or operation; test methods; sampling procedures; and related management systems practices) that are developed or adopted by voluntary consensus standards bodies.

This rule does not use technical standards. Therefore, we did not consider the use of voluntary consensus standards.

M. Environment

We have analyzed this rule under Department of Homeland Security Management Directive 023–01 and Commandant Instruction M16475.lD, which guide the Coast Guard in complying with the National Environmental Policy Act of 1969 (NEPA) (42 U.S.C. 4321–4370f), and have concluded that this action is one of a category of actions that do not individually or cumulatively have a significant effect on the human environment. This rule is categorically excluded under section 2.B.2, figure 2–1, paragraphs (34)(a) and (b) of the Instruction. This rule involves regulations that are editorial, procedural, or concern internal agency functions or organizations. An environmental analysis checklist and a categorical exclusion determination are available in the docket where indicated under **ADDRESSES**.

List of Subjects

33 CFR Part 1

Administrative practice and procedure, Authority delegations (Government agencies), Freedom of information, Penalties.

33 CFR Part 2

Administrative practice and procedure, Law enforcement.

33 CFR Part 27

Administrative practice and procedure, Penalties.

33 CFR Part 40

Military academies.

33 CFR Part 45

Military personnel, Reporting and recordkeeping requirements.

33 CFR Part 66

Intergovernmental relations, Navigation (water), Reporting and recordkeeping requirements.

33 CFR Part 80

Navigation (water), Treaties, Waterways.

33 CFR Parts 83, 84, and 162

Navigation (water), Waterways.

33 CFR Part 85

Fishing vessels, Navigation (water), Waterways.

33 CFR Part 100

Marine safety, Navigation (water), Reporting and recordkeeping requirements, Waterways.

33 CFR Part 101

Harbors, Maritime security, Reporting and recordkeeping requirements, Security measures, Vessels, Waterways.

33 CFR Part 110

Anchorage grounds.

33 CFR Parts 114, 116, and 117

Bridges.

33 CFR Part 115

Administrative practice and procedure, Bridges, Reporting and recordkeeping requirements.

33 CFR Part 118

Bridges.

33 CFR Part 136

Administrative practice and procedure, Advertising, Claims, Oil pollution, Penalties, Reporting and recordkeeping requirements.

33 CFR Part 138

Hazardous materials transportation, Insurance, Oil pollution, Reporting and recordkeeping requirements, Water pollution control.

33 CFR Part 165

Harbors, Marine safety, Navigation (water), Reporting and recordkeeping requirements, Security measures, Waterways.

33 CFR Part 177

Marine safety.

For the reasons discussed in the preamble, the Coast Guard amends 33 CFR parts 1, 2, 27, 40, 45, 66, 80, 83, 84, 85, 100, 101, 110, 114, 115, 116, 117, 118, 136, 138, 162, 165, and 177 as follows:

PART 1—GENERAL PROVISIONS

Subpart 1.05—Rulemaking

■ 1. The authority citation for subpart 1.05 continues to read as follows:

Authority: 5 U.S.C. 552, 553, App. 2; 14 U.S.C. 2, 631, 632, and 633; 33 U.S.C. 471, 499; 49 U.S.C. 101, 322; Department of Homeland Security Delegation No. 0170.1.

■ 2. Amend § 1.05–1 as follows:

■ a. Add paragraph (e)(1)(vii) to read as set forth below; and

■ b. In paragraph (j), remove the words ''District Bridge Chief'' wherever they appear, and add, in their place, the words ''District Bridge Programs Chief''.

§ 1.05–1 Delegation of rulemaking authority.

* * * * *

(e) * * *

(1) * * *

(vii) The establishment of inland waterways navigation regulations.

* * * * *

Subpart 1.07— Enforcement; Civil and Criminal Penalty Proceedings

■ 3. The authority citation for subpart 1.07 is revised to read as follows:

Authority: 14 U.S.C. 633; 14 U.S.C. 92(e); 33 U.S.C. 1321(b)(6)(B); 46 U.S.C. 2103; Department of Homeland Security Delegation 0701.1.

PART 2—JURISDICTION

■ 4. The authority citation for part 2 continues to read as follows:

Authority: 14 U.S.C. 633; 33 U.S.C. 1222; Pub. L. 89–670, 80 Stat. 931, 49 U.S.C. 108; Pub. L. 107–296, 116 Stat. 2135, 2249, 6 U.S.C. 101 note and 468; Department of Homeland Security Delegation No. 0170.1.

§ 2.30 [Amended]

■ 5. In § 2.30(b), following the words ''as reflected in Article'', remove the number ''56'' and add, in its place, the number ''55''.

PART 27— ADJUSTMENT OF CIVIL MONETARY PENALTIES FOR INFLATION

■ 6. The authority citation for part 27 continues to read as follows:

Authority: Secs. 1–6, Pub. L. 101–410, 104 Stat. 890, as amended by Sec. 31001(s)(1), Pub. L. 104–134, 110 Stat. 1321 (28 U.S.C. 2461 note); Department of Homeland Security Delegation No. 0170.1, sec. 2 (106).

■ 7. Revise § 27.3 to read as follows:

§ 27.3 Penalty Adjustment Table.

Table 1 identifies the statutes administered by the Coast Guard that authorize a civil monetary penalty. The ''adjusted maximum penalty'' is the maximum penalty authorized by the Federal Civil Penalties Inflation Adjustment Act of 1990, as amended, as determined by the Coast Guard.

TABLE 1—CIVIL MONETARY PENALTY INFLATION ADJUSTMENTS

U.S. Code citation	Civil monetary penalty description	2012 Adjusted maximum penalty amount ($)
14 U.S.C. 88(c)	Saving Life and Property	8,000
14 U.S.C. 645(i)	Confidentiality of Medical Quality Assurance Records (first offense)	4,000
14 U.S.C. 645(i)	Confidentiality of Medical Quality Assurance Records (subsequent offenses)	30,000
16 U.S.C. 4711(g)(1)	Aquatic Nuisance Species in Waters of the United States	35,000
19 U.S.C. 70	Obstruction of Revenue Officers by Masters of Vessels	3,000
19 U.S.C. 70	Obstruction of Revenue Officers by Masters of Vessels—Minimum Penalty	700
19 U.S.C. 1581(d)	Failure to Stop Vessel When Directed; Master, Owner, Operator or Person in Charge [1].	5,000
19 U.S.C. 1581(d)	Failure to Stop Vessel When Directed; Master, Owner, Operator or Person in Charge—Minimum Penalty [1].	1,000
33 U.S.C. 471	Anchorage Ground/Harbor Regulations General	110
33 U.S.C. 474	Anchorage Ground/Harbor Regulations St. Mary's River	300
33 U.S.C. 495(b)	Bridges/Failure to Comply with Regulations [2]	25,000
33 U.S.C. 499(c)	Bridges/Drawbridges [2]	25,000
33 U.S.C. 502(c)	Bridges/Failure to Alter Bridge Obstructing Navigation [2]	25,000
33 U.S.C. 533(b)	Bridges/Maintenance and Operation	25,000
33 U.S.C. 1208(a)	Bridge to Bridge Communication; Master, Person in Charge or Pilot	800
33 U.S.C. 1208(b)	Bridge to Bridge Communication; Vessel	800
33 U.S.C. 1232(a)	PWSA Regulations	40,000
33 U.S.C. 1236(b)	Vessel Navigation: Regattas or Marine Parades; Unlicensed Person in Charge	8,000
33 U.S.C. 1236(c)	Vessel Navigation: Regattas or Marine Parades; Owner Onboard Vessel	8,000
33 U.S.C. 1236(d)	Vessel Navigation: Regattas or Marine Parades; Other Persons	3,000
33 U.S.C. 1321(b)(6)(B)(i)	Oil/Hazardous Substances: Discharges (Class I per violation)	15,000
33 U.S.C. 1321(b)(6)(B)(i)	Oil/Hazardous Substances: Discharges (Class I total under paragraph)	40,000
33 U.S.C. 1321(b)(6)(B)(ii)	Oil/Hazardous Substances: Discharges (Class II per day of violation)	15,000
33 U.S.C. 1321(b)(6)(B)(ii)	Oil/Hazardous Substances: Discharges (Class II total under paragraph)	190,000
33 U.S.C. 1321(b)(7)(A)	Oil/Hazardous Substances: Discharges (per day of violation) Judicial Assessment	40,000
33 U.S.C. 1321(b)(7)(A)	Oil/Hazardous Substances: Discharges (per barrel of oil or unit discharged) Judicial Assessment.	1,100
33 U.S.C. 1321(b)(7)(B)	Oil/Hazardous Substances: Failure to Carry Out Removal/Comply With Order (Judicial Assessment).	40,000
33 U.S.C. 1321(b)(7)(C)	Oil/Hazardous Substances: Failure to Comply with Regulation Issued Under 1321(j) (Judicial Assessment).	40,000
33 U.S.C. 1321(b)(7)(D)	Oil/Hazardous Substances: Discharges, Gross Negligence (per barrel of oil or unit discharged) Judicial Assessment.	4,000
33 U.S.C. 1321(b)(7)(D)	Oil/Hazardous Substances: Discharges, Gross Negligence—Minimum Penalty (Judicial Assessment).	130,000
33 U.S.C. 1322(j)	Marine Sanitation Devices; Operating	3,000
33 U.S.C. 1322(j)	Marine Sanitation Devices; Sale or Manufacture	8,000
33 U.S.C. 1608(a)	International Navigation Rules; Operator	8,000
33 U.S.C. 1608(b)	International Navigation Rules; Vessel	8,000
33 U.S.C. 1908(b)(1)	Pollution from Ships; General	40,000
33 U.S.C. 1908(b)(2)	Pollution from Ships; False Statement	8,000
33 U.S.C. 2072(a)	Inland Navigation Rules; Operator	8,000
33 U.S.C. 2072(b)	Inland Navigation Rules; Vessel	8,000
33 U.S.C. 2609(a)	Shore Protection; General	40,000
33 U.S.C. 2609(b)	Shore Protection; Operating Without Permit	15,000
33 U.S.C. 2716a(a)	Oil Pollution Liability and Compensation	40,000
33 U.S.C. 3852(a)(1)(A)	Clean Hulls; Civil Enforcement	37,500
33 U.S.C. 3852(a)(1)(B)	Clean Hulls; Civil Enforcement	50,000
42 U.S.C. 9609(a)	Hazardous Substances, Releases, Liability, Compensation (Class I)	35,000
42 U.S.C. 9609(b)	Hazardous Substances, Releases, Liability, Compensation (Class II)	35,000
42 U.S.C. 9609(b)	Hazardous Substances, Releases, Liability, Compensation (Class II subsequent offense).	100,000
42 U.S.C. 9609(c)	Hazardous Substances, Releases, Liability, Compensation (Judicial Assessment)	35,000
42 U.S.C. 9609(c)	Hazardous Substances, Releases, Liability, Compensation (Judicial Assessment subsequent offense).	100,000
46 U.S.C. App 1505(a)(2)	Safe Containers for International Cargo	8,000
46 U.S.C. App 1712(a)	International Ocean Commerce Transportation—Common Carrier Agreements per violation.	6,000
46 U.S.C. App 1712(a)	International Ocean Commerce Transportation—Common Carrier Agreements per violation—Willfull violation.	30,000
46 U.S.C. App 1712(b)	International Ocean Commerce Transportation—Common Carrier Agreements—Fine for tariff violation (per shipment).	60,000
46 U.S.C. App 1805(c)(2)	Suspension of Passenger Service	70,000
46 U.S.C. 2110(e)	Vessel Inspection or Examination Fees	8,000
46 U.S.C. 2115	Alcohol and Dangerous Drug Testing	7,000
46 U.S.C. 2302(a)	Negligent Operations: Recreational Vessels	6,000
46 U.S.C. 2302(a)	Negligent Operations: Other Vessels	30,000

TABLE 1—CIVIL MONETARY PENALTY INFLATION ADJUSTMENTS—Continued

U.S. Code citation	Civil monetary penalty description	2012 Adjusted maximum penalty amount ($)
46 U.S.C. 2302(c)(1)	Operating a Vessel While Under the Influence of Alcohol or a Dangerous Drug	7,000
46 U.S.C. 2306(a)(4)	Vessel Reporting Requirements: Owner, Charterer, Managing Operator, or Agent	8,000
46 U.S.C. 2306(b)(2)	Vessel Reporting Requirements: Master	1,100
46 U.S.C. 3102(c)(1)	Immersion Suits	8,000
46 U.S.C. 3302(i)(5)	Inspection Permit	1,100
46 U.S.C. 3318(a)	Vessel Inspection; General	8,000
46 U.S.C. 3318(g)	Vessel Inspection; Nautical School Vessel	8,000
46 U.S.C. 3318(h)	Vessel Inspection; Failure to Give Notice IAW 3304(b)	1,100
46 U.S.C. 3318(i)	Vessel Inspection; Failure to Give Notice IAW 3309(c)	1,100
46 U.S.C. 3318(j)(1)	Vessel Inspection; Vessel ≥1600 Gross Tons	15,000
46 U.S.C. 3318(j)(1)	Vessel Inspection; Vessel <1600 Gross Tons	3,000
46 U.S.C. 3318(k)	Vessel Inspection; Failure to Comply with 3311(b)	15,000
46 U.S.C. 3318(l)	Vessel Inspection; Violation of 3318(b)–3318(f)	8,000
46 U.S.C. 3502(e)	List/count of Passengers	110
46 U.S.C. 3504(c)	Notification to Passengers	15,000
46 U.S.C. 3504(c)	Notification to Passengers; Sale of Tickets	800
46 U.S.C. 3506	Copies of Laws on Passenger Vessels; Master	300
46 U.S.C. 3718(a)(1)	Liquid Bulk/Dangerous Cargo	40,000
46 U.S.C. 4106	Uninspected Vessels	8,000
46 U.S.C. 4311(b)(1)	Recreational Vessels (maximum for related series of violations)	300,000
46 U.S.C. 4311(b)(1)	Recreational Vessels; Violation of 4307(a)	6,000
46 U.S.C. 4311(c)	Recreational vessels	1,100
46 U.S.C. 4507	Uninspected Commercial Fishing Industry Vessels	8,000
46 U.S.C. 4703	Abandonment of Barges	1,100
46 U.S.C. 5116(a)	Load Lines	8,000
46 U.S.C. 5116(b)	Load Lines; Violation of 5112(a)	15,000
46 U.S.C. 5116(c)	Load Lines; Violation of 5112(b)	8,000
46 U.S.C. 6103(a)	Reporting Marine Casualties	35,000
46 U.S.C. 6103(b)	Reporting Marine Casualties; Violation of 6104	8,000
46 U.S.C. 8101(e)	Manning of Inspected Vessels; Failure to Report Deficiency in Vessel Complement.	1,100
46 U.S.C. 8101(f)	Manning of Inspected Vessels	15,000
46 U.S.C. 8101(g)	Manning of Inspected Vessels; Employing or Serving in Capacity not Licensed by USCG.	15,000
46 U.S.C. 8101(h)	Manning of Inspected Vessels; Freight Vessel <100 GT, Small Passenger Vessel, or Sailing School Vessel.	1,100
46 U.S.C. 8102(a)	Watchmen on Passenger Vessels	1,100
46 U.S.C. 8103(f)	Citizenship Requirements	800
46 U.S.C. 8104(i)	Watches on Vessels; Violation of 8104(a) or (b)	15,000
46 U.S.C. 8104(j)	Watches on Vessels; Violation of 8104(c), (d), (e), or (h)	15,000
46 U.S.C. 8302(e)	Staff Department on Vessels	110
46 U.S.C. 8304(d)	Officer's Competency Certificates	110
46 U.S.C. 8502(e)	Coastwise Pilotage; Owner, Charterer, Managing Operator, Agent, Master or Individual in Charge.	15,000
46 U.S.C. 8502(f)	Coastwise Pilotage; Individual	15,000
46 U.S.C. 8503	Federal Pilots	40,000
46 U.S.C. 8701(d)	Merchant Mariners Documents	800
46 U.S.C. 8702(e)	Crew Requirements	15,000
46 U.S.C. 8906	Small Vessel Manning	35,000
46 U.S.C. 9308(a)	Pilotage: Great Lakes; Owner, Charterer, Managing Operator, Agent, Master or Individual in Charge.	15,000
46 U.S.C. 9308(b)	Pilotage: Great Lakes; Individual	15,000
46 U.S.C. 9308(c)	Pilotage: Great Lakes; Violation of 9303	15,000
46 U.S.C. 10104(b)	Failure to Report Sexual Offense	8,000
46 U.S.C. 10314(a)(2)	Pay Advances to Seamen	800
46 U.S.C. 10314(b)	Pay Advances to Seamen; Remuneration for Employment	800
46 U.S.C. 10315(c)	Allotment to Seamen	800
46 U.S.C. 10321	Seamen Protection; General	7,000
46 U.S.C. 10505(a)(2)	Coastwise Voyages: Advances	7,000
46 U.S.C. 10505(b)	Coastwise Voyages: Advances; Remuneration for Employment	7,000
46 U.S.C. 10508(b)	Coastwise Voyages: Seamen Protection; General	7,000
46 U.S.C. 10711	Effects of Deceased Seamen	300
46 U.S.C. 10902(a)(2)	Complaints of Unfitness	800
46 U.S.C. 10903(d)	Proceedings on Examination of Vessel	110
46 U.S.C. 10907(b)	Permission to Make Complaint	800
46 U.S.C. 11101(f)	Accommodations for Seamen	800
46 U.S.C. 11102(b)	Medicine Chests on Vessels	800
46 U.S.C. 11104(b)	Destitute Seamen	110
46 U.S.C. 11105(c)	Wages on Discharge	800

TABLE 1—CIVIL MONETARY PENALTY INFLATION ADJUSTMENTS—Continued

U.S. Code citation	Civil monetary penalty description	2012 Adjusted maximum penalty amount ($)
46 U.S.C. 11303(a)	Log Books; Master Failing to Maintain	300
46 U.S.C. 11303(b)	Log Books; Master Failing to Make Entry	300
46 U.S.C. 11303(c)	Log Books; Late Entry	200
46 U.S.C. 11506	Carrying of Sheath Knives	80
46 U.S.C. 12151(a)	Documentation of Vessels (violation per day)	15,000
46 U.S.C. 12151(c)	Engaging in Fishing After Falsifying Eligibility (fine per day)	130,000
46 U.S.C. 12309(a)	Numbering of Undocumented Vessels—Willfull violation	6,000
46 U.S.C. 12309(b)	Numbering of Undocumented Vessels	1,100
46 U.S.C. 12507(b)	Vessel Identification System	15,000
46 U.S.C. 14701	Measurement of Vessels	30,000
46 U.S.C. 14702	Measurement; False Statements	30,000
46 U.S.C. 31309	Commercial Instruments and Maritime Liens	15,000
46 U.S.C. 31330(a)(2)	Commercial Instruments and Maritime Liens; Mortgagor	15,000
46 U.S.C. 31330(b)(2)	Commercial Instruments and Maritime Liens; Violation of 31329	35,000
46 U.S.C. 70119	Port Security	30,000
46 U.S.C. 70119(b)	Port Security—Continuing Violations	50,000
46 U.S.C. 70506	Maritime Drug Law Enforcement; Penalties	5,000
49 U.S.C. 5123(a)(1)	Hazardous Materials: Related to Vessels—Maximum Penalty	60,000
49 U.S.C. 5123(a)(1)	Hazardous Materials: Related to Vessels—Minimum Penalty	300
49 U.S.C. 5123(a)(2)	Hazardous Materials: Related to Vessels—Penalty from Fatalities, Serious Injuries/Illness or substantial Damage to Property.	110,000

Note: The changes in Civil Penalties for calendar year 2012, shown above, are based on the change in CPI–U from June 2009 to June 2010. The recorded change in CPI–U during that period was 1.05%. Because of the small change in CPI–U and the required rules for rounding, there was no change to any of the maximum penalty amounts from the previous adjustment.

[1] Enacted under the Tariff Act of 1930, exempt from inflation adjustments.

[2] These penalties increased in accordance with the statute to $10,000 in 2005, $15,000 in 2006, $20,000 in 2007, and $25,000 in 2008 and thereafter.

PART 40—CADETS OF THE COAST GUARD

■ 8. The authority citation for part 40 is revised to read as follows:

Authority: 14 U.S.C. 182 and 633.

PART 45—ENLISTMENT OF PERSONNEL

■ 9. The authority citation for part 45 is revised to read as follows:

Authority: 14 U.S.C. 351, 371; Pub. L. 107–296, 116 Stat. 2135.

PART 66—PRIVATE AIDS TO NAVIGATION

■ 10. The authority citation for part 66 continues to read as follows:

Authority: 14 U.S.C. 83, 84, 85; 43 U.S.C. 1333; Pub. L. 107–296, 116 Stat. 2135; Department of Homeland Security Delegation No. 0170.1.

■ 11. In § 66.01–1, revise paragraph (a) to read as follows:

§ 66.01–1 Basic provisions.

(a) No person, public body, or instrumentality not under the control of the Commandant, exclusive of the Armed Forces, will establish and maintain, discontinue, change or transfer ownership of any aid to maritime navigation, without first obtaining permission to do so from the Commandant.

* * * * *

§ 66.01–5 [Amended]

■ 12. In § 66.01–5 introductory text, following the text ''CG–2554 at'', remove the text '' *http://www.uscgboating.org/safety/aton/aids.htm*'', and add, in its place, the text ''*http://www.uscg.mil/forms/form_public_use.asp*''.

■ 13. Amend § 66.10–1 as follows:

■ a. Redesignate paragraphs (a) and (b) as paragraphs (b) and (c), respectively; and

■ b. Add new paragraph (a) to read as follows:

§ 66.10–1 General.

(a) The Uniform State Waterway Marking System's (USWMS) aids to navigation provisions for marking channels and obstructions (see § 66.10–15) may be used in those navigable waters of the U.S. that have been designated as state waters for private aids to navigation and in those internal waters that are non-navigable waters of the U.S. All other provisions for the use of regulatory markers and other aids to navigation must be in accordance with United States Aid to Navigation System, described in part 62 of this subchapter.

* * * * *

PART 80—COLREGS DEMARCATION LINES

■ 14. The authority citation for part 80 is revised to read as follows:

Authority: 14 U.S.C. 2; 14 U.S.C. 633; 33 U.S.C. 151(a).

§ 80.155 [Amended]

■ 15. In § 80.155(g), remove the word ''Nichols'' and add, in its place, the word ''Nicholl''.

§ 80.825 [Amended]

■ 16. In § 80.825, remove paragraphs (d) and (e).

PART 83—RULES

■ 17. The authority citation for part 83 continues to read as follows:

Authority: Sec. 303, Pub. L. 108–293, 118 Stat. 1028 (33 U.S.C. 2001); Department of Homeland Security Delegation No. 0170.1.

■ 18. In § 83.10, revise paragraph (l) to read as follows:

§ 83.10 Traffic separation schemes (Rule 10).

* * * * *

(l) *Exemption; laying, servicing, or picking up submarine cable.* A vessel restricted in her ability to maneuver when engaged in an operation for the laying, servicing, or picking up of a submarine cable, within a traffic

separation scheme, is exempted from complying with this rule to the extent necessary to carry out the operation.

§ 83.27 [Amended]

■ 19. In § 83.27(f), remove the word ''mineclearance'' wherever it appears, and add, in its place, the words ''mine clearance''.

PART 84—ANNEX I: POSITIONING AND TECHNICAL DETAILS OF LIGHTS AND SHAPES

■ 20. The authority citation for part 84 continues to read as follows:

Authority: 33 U.S.C. 2071; Department of Homeland Security Delegation No. 0170.1.

§ 84.01 [Amended]

■ 21. In § 84.01(b), following the text ''design waterline ('', remove the text ''meters$_3$'', and add, in its place, the text ''cubic meters''.

§ 84.03 [Amended]

■ 22. In § 84.03(f)(2), following the text ''Rule 27(b)'', remove the text ''(i)'', and add, in its place, the text ''(1)''.

§ 84.07 [Amended]

■ 23. Amend § 84.07 as follows:

■ a. In paragraph (a), remove the text ''Rule 26 (c)(ii)'', and add, in its place, the text ''Rule 26(c)(2)''; and remove the text ''Rule 26(c)(i)'', and add, in its place, the text ''Rule 26(c)(1)''; and

■ b. In paragraph (b), remove the text ''Rule 27(d)(i) and (ii)'', and add, in its place, the text ''Rule 27(d)(1) and (2)''; and remove the text ''Rule 27(b)(i) and (ii)'' wherever it appears, and add, in its place, the text ''Rule 27(b)(1) and (2)''.

■ 24. Revise § 84.15(a) to read as follows:

§ 84.15 Intensity of lights.

(a) The minimum luminous intensity of lights will be calculated by using the formula:

$$I = 3.43 \times 10^6 \times T \times D^2 \times K^{-D}$$

where I is luminous intensity in candelas under service conditions,
T is threshold factor 2×10^{-7} lux,
D is range of visibility (luminous range) of the light in nautical miles,
K is atmospheric transmissivity. For prescribed lights the value of K will be 0.8, corresponding to a meteorological visibility of approximately 13 nautical miles.

* * * * *

§ 84.17 [Amended]

■ 25. In § 84.17(c) ''Note to paragraph (c)'', remove the word ''Tow'', and add, in its place, the word ''Two''.

PART 85—ANNEX II: ADDITIONAL SIGNALS FOR FISHING VESSELS FISHING IN CLOSE PROXIMITY

■ 26. The authority citation for part 85 is revised to read as follows:

Authority: Sec. 3, Pub. L. 96–591.

§ 85.1 [Amended]

■ 27. In § 85.1, remove the text ''Rule 26(b)(i) and (c)(i)'', and add, in its place, the text ''Rule 26(b)(1) and (c)(1)''.

PART 100—SAFETY OF LIFE ON NAVIGABLE WATERS

■ 28. The authority citation for part 100 continues to read as follows:

Authority: 33 U.S.C. 1233.

§ 100.901 [Amended]

■ 29. In § 100.901 ''Table 1'', remove the words ''Group Buffalo'', and add, in their place, the words ''Sector Buffalo''.

■ 30. Revise the heading of § 100.912 to read as follows:

§ 100.912 Detroit Belle Isle Grand Prix, Detroit MI.

* * * * *

§ 100.916 [Amended]

■ 31. In § 100.916(a), remove the word ''Russel'' wherever it appears, and add, in its place, the word ''Russell''.

PART 101—MARITIME SECURITY: GENERAL

■ 32. The authority citation for part 101 continues to read as follows:

Authority: 33 U.S.C. 1226, 1231; 46 U.S.C. Chapter 701; 50 U.S.C. 191, 192; Executive Order 12656, 3 CFR 1988 Comp., p. 585; 33 CFR 1.05–1, 6.04–11, 6.14, 6.16, and 6.19; Department of Homeland Security Delegation Number 0170.1.

■ 33. Revise § 101.510 to read as follows:

§ 101.510 Assessment tools.

Ports, vessels, and facilities required to conduct security assessments by part 103, 104, 105, or 106 of this subchapter may use any assessment tool that meets the standards set out in part 103, 104, 105, or 106, as applicable. These tools may include USCG assessment tools, which are available from the cognizant COTP or at *http://www.uscg.mil/hq/g-m/nvic,* as set out in the following:

(a) Navigation and Vessel Inspection Circular titled, ''Guidelines for Port Security Committees, and Port Security Plans Required for U.S. Ports'' (NVIC 9–02 change 2);

(b) Navigation and Vessel Inspection Circular titled, ''Security Guidelines for Vessels'', (NVIC 10–02 change 1); and

(c) Navigation and Vessel Inspection Circular titled, ''Security Guidelines for Facilities'', (NVIC 11–02 change 1).

PART 110—ANCHORAGE REGULATIONS

■ 34. The authority citation for part 110 is revised to read as follows:

Authority: 33 U.S.C. 471, 1221 through 1236, 2030, 2035, 2071; 33 CFR 1.05–1; Department of Homeland Security Delegation No. 0170.1.

■ 35. In § 110.155, revise the notes following paragraphs (a)(2), (a)(3), (f)(3), and (h)(4) to read as follows:

§ 110.155 Port of New York.

(a) * * *
(2) * * *

Note to paragraph (a)(2): The special anchorage area in this anchorage is described in § 110.60.

(3) * * *

Note to paragraph (a)(3): The special anchorage area in this anchorage is described in § 110.60.

* * * * *

(f) * * *
(3) * * *

Note to paragraph (f)(3): The special anchorage area in this anchorage is described in § 110.60.

* * * * *

(h) * * *
(4) * * *

Note to paragraph (h)(4): The special anchorage area in this anchorage is described in § 110.60.

* * * * *

§ 110.156 [Amended]

■ 36. In § 110.156(b)(1) following the words ''Captain of the Port of'', remove the words ''New York'', and add, in their place, the words ''Long Island Sound''.

PART 114—GENERAL

■ 37. The authority citation for part 114 continues to read as follows:

Authority: 33 U.S.C. 401, 406, 491, 494, 495, 499, 502, 511, 513, 514, 516, 517, 519, 521, 522, 523, 525, 528, 530, 533, and 535(c), (e), and (h); 14 U.S.C. 633; 49 U.S.C. 1655(g); Pub. L. 107–296, 116 Stat. 2135; 33 CFR 1.05–1 and 1.01–60, Department of Homeland Security Delegation Number 0170.1.

■ 38. Revise § 114.05 to read as follows:

§ 114.05 Definitions.

The following definitions apply to this subchapter:

Approved means approved by the Commandant unless otherwise stated.

Bridge means a structure erected across navigable waters of the United States, and includes causeways, approaches, fenders, and other appurtenances thereto.

Coast Guard District Commander or District Commander means an officer of the Coast Guard designated as such by the Commandant to command all Coast Guard activities within his or her district. (See part 3 of this chapter for descriptions of Coast Guard Districts.)

Commandant means Commandant, U.S. Coast Guard, Department of Homeland Security, Washington, DC 20593.

Deputy Commandant for Operations means the officer of the Coast Guard designated by the Commandant as the staff officer in charge of ''Operations'' (DCO), U.S. Coast Guard Headquarters.

District Office or Coast Guard District Office means the Office of the Commander of a Coast Guard District.

Headquarters or Coast Guard Headquarters means the Office of the Commandant, U.S. Coast Guard, Department of Homeland Security, Washington, DC 20593–7000.

Permit means the license permitting construction of bridges and approaches thereto in or over navigable waters of the United States, issued under the rules and regulations in this subchapter.

Secretary means the Secretary of Homeland Security or any person to whom he or she has delegated his or her authority in the matter concerned.

United States Coast Guard or Coast Guard means the organization or agency established by the Act of January 28, 1915, as amended (14 U.S.C. 1).

§ 114.20 [Amended]

■ 39. In § 114.20(a), following the text ''required to furnish'', remove the text ''a tracing'' and add, in its place, the text ''as-built plans''.

§ 114.50 [Amended]

■ 40. Amend § 114.50 as follows:

■ a. Remove the text ''(CG–551)'', and add, in its place, the text ''(CG–BRG)'';

■ b. Following the text ''2nd St. SW., Stop'' remove the text ''7683'' and add, in its place, the text ''7580''; and

■ c. Following the text ''DC 20593–'', remove the text ''7683'', and add, in its place, the text ''7580''.

PART 115—BRIDGE LOCATIONS AND CLEARANCES; ADMINISTRATIVE PROCEDURES

■ 41. The authority citation for part 115 is revised to read as follows:

Authority: c. 425, sec. 9, 30 Stat. 1151 (33 U.S.C. 401); c. 1130, sec. 1, 34 Stat. 84 (33 U.S.C. 491); sec. 5, 28 Stat. 362, as amended (33 U.S.C. 499); sec. 11, 54 Stat. 501, as amended (33 U.S.C. 521); c. 753, Title V, sec. 502, 60 Stat. 847, as amended (33 U.S.C. 525); 86 Stat. 732 (33 U.S.C. 535); 14 U.S.C. 633.

§ 115.01 [Amended]

■ 42. In § 115.01, following the words ''a permit'', remove the words ''for construction of or modification to'', and add, in their place, the words ''to construct or modify''.

§ 115.05 [Amended]

■ 43. In § 115.05, following the words ''authority. If there'', remove the word ''be'', and add, in its place, the word ''is''.

§ 115.40 [Amended]

■ 44. In § 115.40, following the words ''routine maintenance without'', remove the words ''approval of'', and add, in their place, the words ''a formal permit action from''.

§ 115.50 [Amended]

■ 45. In § 115.50(h)(1), following the words ''in feet and'', remove the word ''referred'', and add, in its place, the word ''refer''.

■ 46. Amend § 115.60 as follows:

■ a. Revise the section heading to read as set forth below;

■ b. In paragraph (a), following the words ''construction of the bridge, reviews'', remove the text '',''; and

■ c. In paragraph (d)(3), following the text ''reasons for the disapproval'', remove the text '',''.

§ 115.60 Procedures for handling applications for bridge construction permits.

* * * * *

PART 116—ALTERATION OF UNREASONABLY OBSTRUCTIVE BRIDGES

■ 47. The authority citation for part 116 is revised to read as follows:

Authority: 33 U.S.C. 401, 521.

§ 116.15 [Amended]

■ 48. In § 116.15(a), remove the words ''Bridge Administration Program'', and add, in their place, the words ''Office of Bridge Programs''.

PART 117—DRAWBRIDGE OPERATION REGULATIONS

■ 49. The authority citation for part 117 continues to read as follows:

Authority: 33 U.S.C. 499; 33 CFR 1.05–1; and Department of Homeland Security Delegation No. 0170.1.

§ 117.325 [Amended]

■ 50. In § 117.325(a), remove the text ''(US 17)'', and add, in its place, the text ''(US 1/SR 90)''.

§ 117.541 [Redesignated as § 117.566]

■ 51. Redesignate § 117.541 as § 117.566.

■ 52. In newly redesignated § 117.566, revise the section heading and paragraph (a) to read as follows:

§ 117.566 Patapsco River—Middle Branch.

(a) The draw of the Hanover Street S2 bridge, mile 12.0 across the Middle Branch of the Patapsco River at Baltimore, will open on signal from 5 a.m. to 6:30 a.m., 9:30 a.m. to 4 p.m., and 6 p.m. to 9:00 p.m. The draw need not be opened from 6:30 a.m. to 9:30 a.m. and 4 p.m. to 6 p.m.; however, fire boats, police boats, and other vessels engaged in emergency operations will be passed immediately during this period. When a vessel desires to pass the draw from 9 p.m. to 5 a.m., notice will be given to the superintendent of the bridge, either at the bridge before 9 p.m. or at the superintendent's residence after 9 p.m. If the notice is given from 5 a.m. to 9 p.m. or if at least one half hour has elapsed since the notice was given, the draw will open promptly at the time requested.

* * * * *

§ 117.571 [Amended]

■ 53. In § 117.571 introductory text, remove ''4.0'', and add, in its place, the text ''0.4''.

§ 117.719 [Redesignated as § 117.718]

■ 54. Redesignate § 117.719 as § 117.718.

§ 117.715 [Redesignated as § 117.719]

■ 55. Redesignate § 117.715 as 117.719.

§ 117.719 [Amended]

■ 56. In newly redesignated § 117.719, revise the section heading to read as follows:

§ 117.719 Glimmer Glass (Debbie's Creek).

* * * * *

§ 117.745 [Amended]

■ 57. Amend § 117.745 as follows:

■ a. Revise the section heading to read as set forth below; and

■ b. In paragraph (b) introductory text, remove the text ''SR#543 Drawbridge'', and add, in its place, the text ''Riverside-Delanco/SR #543 Drawbridge''.

§ 117.745 Rancocas Creek.

* * * * *

§ 117.822 [Removed]

■ 58. Remove § 117.822.

§ 117.823 [Redesignated as § 117.822]

■ 59. Redesignate § 117.823 as § 117.822.

■ 60. Add § 117.823 to read as follows:

§ 117.823 Gallants Channel.

The draw of the US 70 bridge, mile 0.1, at Beaufort, will open as follows:

(a) From 6 a.m. to 10 p.m., the draw need only open on the hour and on the half hour; except that Monday through Friday the bridge need not open between the hours of 6:30 a.m. to 8 a.m. and 4:30 p.m. to 6 p.m.

(b) From 10 p.m. to 6 a.m., the bridge will open on signal.

§ 117.965 [Amended]

■ 61. In § 117.965, following the text ''mile 4.5 at'', remove the text ''Bay'', and add, in its place, the text ''Bridge''.

PART 118—BRIDGE LIGHTING AND OTHER SIGNALS

■ 62. The authority citation for part 118 continues to read as follows:

Authority: 33 U.S.C. 494; 14 U.S.C. 85, 633; Department of Homeland Security Delegation No. 0170.1.

§ 118.3 [Amended]

■ 63. In § 118.3(b) following the text ''2100 2nd St. SW., Stop'', remove the text ''7683'' and add, in its place, the text ''7580''; and following the text ''DC 20593–'', remove the text ''7683'' and add, in its place, the text ''7580''.

§ 118.160 [Amended]

■ 64. In § 118.160(b), following the words ''the bridge channel span'', add the words ''(in the closed to navigation position for drawbridges)''.

PART 136—OIL SPILL LIABILITY TRUST FUND; CLAIMS PROCEDURES; DESIGNATION OF SOURCE; AND ADVERTISEMENT

■ 65. The authority citation for part 136 continues to read as follows:

Authority: 33 U.S.C. 2713(e) and 2714; Sec. 1512 of the Homeland Security Act of 2002, Pub. L. 107–296, Title XV, Nov. 25, 2002, 116 Stat. 2310 (6 U.S.C. 552(d)); E.O. 12777, 56 FR 54757, 3 CFR, 1991 Comp., p. 351, as amended by E.O. 13286, 68 FR 10619, 3 CFR, 2004 Comp., p. 166; Department of Homeland Security Delegation No. 0170.1, para. 2(80).

§ 136.3 [Amended]

■ 66. In § 136.3, following the text ''from the Director'', add the text ''.''.

§ 136.5 [Amended]

■ 67. In § 136.5(b), in the definition of ''NPFC'', following the text ''means the Director'', add the text ''.''.

§ 136.101 [Amended]

■ 68. In § 136.101(b), following the text ''received at the Director'', add the text ''.''.

§ 136.305 [Amended]

■ 69. Amend § 136.305 as follows:

■ a. In paragraph (b)(3), following the words ''The type'', remove the word ''of'', and add, in its place, the word ''and''; and

■ b. In paragraph (b)(6), following the words ''whom further communication'', remove the word ''regrading'', and add, in its place, the word ''regarding''.

PART 138—FINANCIAL RESPONSIBILITY FOR WATER POLLUTION (VESSELS) AND OPA 90 LIMITS OF LIABILITY (VESSELS AND DEEPWATER PORTS)

■ 70. The authority citation for part 138 continues to read as follows:

Authority: 33 U.S.C. 2704; 33 U.S.C. 2716, 2716a; 42 U.S.C. 9608, 9609; Sec. 1512 of the Homeland Security Act of 2002, Public Law 107–296, Title XV, Nov. 25, 2002, 116 Stat. 2310 (6 U.S.C. 552(d)); E.O. 12580, Sec. 7(b), 3 CFR, 1987 Comp., p. 198; E.O. 12777, Sec. 5, 3 CFR, 1991 Comp., p. 351, as amended by E.O. 13286, 68 FR 10619, 3 CFR, 2004 Comp., p. 166; Department of Homeland Security Delegation Nos. 0170.1 and 5110. Section 138.30 also issued under the authority of 46 U.S.C. 2103 and 14302.

§ 138.20 [Amended]

■ 71. Amend § 138.20(b) as follows:

■ a. In the definition of ''Application'', following the text ''U.S. Coast Guard'', add the text ''.'';

■ b. In the definition of ''Certificant'', following the text ''U.S. Coast Guard'', add the text ''.''; and

■ c. In the definition of ''E–COFR'', remove the text ''*http://www.npfc.gov/cofr*'', and add, in its place, the text ''*https://npfc.uscg.mil/cofr/default.aspx*''.

§ 138.40 [Amended]

■ 72. In § 138.40, remove the text ''*http://www.npfc.gov/cofr*'', and add, in its place, the text ''*https://npfc.uscg.mil/cofr/default.aspx*''.

§ 138.45 [Amended]

■ 73. In § 138.45(a), remove the text ''*http://www.npfc.gov/cofr*'', and add, in its place, the text ''*https://npfc.uscg.mil/cofr/default.aspx*''.

§ 138.240 [Amended]

■ 74. In § 138.240(b), following the words ''liability in the'', add a space; and following the text ''Register.'', add a space.

PART 162—INLAND WATERWAYS NAVIGATION REGULATIONS

■ 75. The authority citation for part 162 continues to read as follows:

Authority: 33 U.S.C. 1231; Department of Homeland Security Delegation No. 0170.1.

§ 162.120 [Amended]

■ 76. In § 162.120(a), following the text ''(Manistee County), Frankfort,'' remove the text ''Charlevois, and Petroskey'', and add, in its place, the text ''Charlevoix, and Petoskey''.

PART 165—REGULATED NAVIGATION AREAS AND LIMITED ACCESS AREAS

■ 77. The authority citation for part 165 continues to read as follows:

Authority: 33 U.S.C. 1231; 46 U.S.C. Chapter 701, 3306, 3703; 50 U.S.C. 191, 195; 33 CFR 1.05–1, 6.04–1, 6.04–6, and 160.5; Pub. L. 107–295, 116 Stat. 2064; Department of Homeland Security Delegation No. 0170.1.

§ 165.920 [Amended]

■ 78. In § 165.920(b), following the text ''telephone at (313) 568–'', remove the text ''9580'', and add, in its place, the text ''9560''; and following the text ''by writing to:'', remove the text ''MSO'', and add, in its place, the text ''Sector''.

§ 165.941 [Amended]

■ 79. Amend § 165.941 as follows:

■ a. Revise the section heading to read as set forth below;

■ b. In paragraph (a)(4)(i), following the words ''southern end of'', remove the word ''Harsen's'', and add, in its place, the word ''Harsens'';

■ c. Remove paragraph (a)(5);

■ d. Redesignate paragraphs (a)(6) through (a)(56) as (a)(5) through (a)(55), respectively;

■ e. In newly redesignated paragraphs (a)(6), (a)(35), (a)(41), and (a)(49), remove the words ''Grosse Point'' wherever they appear, and add, in their place, the words ''Grosse Pointe'';

■ f. In newly redesignated paragraph (a)(24) introductory text, remove the word ''Kellys'' wherever it appears, and add, in its place, the word ''Kelleys'';

■ g. In newly redesignated paragraph (a)(37)(i), remove the word ''Russel'', and add, in its place, the word ''Russell'';

■ h. In newly redesignated paragraphs (a)(44) introductory text and (a)(44)(i), remove the words ''Grosse Isle'' wherever they appear, and add, in their place, the words ''Grosse Ile''; and

■ i. In paragraph (f), following the words ''to Mariners. The Captain of the Port'',

remove the word ''will'', and add, in its place, the word ''may''; and following the words ''section is cancelled'', add the words ''if deemed necessary''.

§ 165.941 Safety Zones; Annual Events in the Captain of the Port Detroit Zone.

* * * * *

PART 177—CORRECTION OF ESPECIALLY HAZARDOUS CONDITIONS

■ 80. The authority citation for part 177 is revised to read as follows:

Authority: 46 U.S.C. 4302, 4311; Pub. L. 103–206, 107 Stat. 2439.

§ 177.09 [Amended]

■ 81. In § 177.09(b)(2), following the text ''any other provision of'', remove the text ''43 U.S.C.'', and add, in its place, the text ''46 U.S.C.''.

Dated: June 12, 2012.

Kathryn A. Sinniger,

Chief, Office of Regulations and Administrative Law U.S. Coast Guard.

[FR Doc. 2012–14848 Filed 6–20–12; 8:45 am]

BILLING CODE 9110–04–P

DEPARTMENT OF HOMELAND SECURITY

Coast Guard

33 CFR Part 117

[USCG–2012–0509]

Drawbridge Operation Regulations; Reynolds Channel, Nassau, NY

AGENCY: Coast Guard, DHS.

ACTION: Notice of temporary deviation from regulations.

SUMMARY: The Commander, First Coast Guard District, has issued a temporary deviation from the regulations governing the operation of the Long Beach Bridge, mile 4.7, across Reynolds Channel, at Nassau, New York. This temporary deviation authorizes the Long Beach Bridge to remain in the closed position for two and a half hours to facilitate public safety during the Town of Hempstead Annual Salute to Veterans Fireworks Display.

DATES: This deviation is effective from 9:30 p.m. on June 30, 2012 through midnight on July 1, 2012.

ADDRESSES: Documents mentioned in this preamble as being available in the docket are part of docket USCG–2012–0509 and are available online at *www.regulations.gov,* inserting USCG–2012–0509 in the ''Keyword'' and then clicking ''Search''. They are also available for inspection or copying at the Docket Management Facility (M–30), U.S. Department of Transportation, West Building Ground Floor, Room W12–140, 1200 New Jersey Avenue SE., Washington, DC, 20590, between 9 a.m. and 5 p.m., Monday through Friday, except Federal holidays.

FOR FURTHER INFORMATION CONTACT: If you have questions on this rule, call or email Ms. Judy Leung-Yee, Project Officer, First Coast Guard District, telephone (212) 668–7165, email *judy.k.leung-yee@uscg.mil.* If you have questions on viewing the docket, call Renee V. Wright, Program Manager, Docket Operations, telephone 202–366–9826.

SUPPLEMENTARY INFORMATION: The Long Beach Bridge, across Reynolds Channel, mile 4.7, at Nassau, New York, has a vertical clearance in the closed position of 20 feet at mean high water and 24 feet at mean low water. The existing drawbridge operation regulations are listed at 33 CFR 117.799(g).

The owner of the bridge, Nassau County Department of Public Works, requested a temporary deviation to facilitate safe traffic management for the Town of Hempstead Annual Salute to Veterans Fireworks Display scheduled for Saturday, June 30, 2012. If the fireworks display is postponed due to inclement weather, the event will take place on Sunday, July 1, 2012.

Under this temporary deviation the Long Beach Bridge may remain in the closed position from 9:30 p.m. through midnight on July 1, 2012. If the fireworks display is postponed due to inclement weather, the Long Beach Bridge may remain in the closed position from 9:30 p.m. through midnight on July 2, 2012.

The waterway has commercial and seasonal recreational vessels of various sizes. The Coast Guard contacted all known commercial waterway users regarding this deviation and no objections were received. Vessels that can pass under the bridge without a bridge opening may do so at all times.

In accordance with 33 CFR 117.35(e), the bridge must return to its regular operating schedule immediately at the end of the designated time period. This deviation from the operating regulations is authorized under 33 CFR 117.35.

Dated: June 7, 2012.

Gary Kassof,

Bridge Program Manager, First Coast Guard District.

[FR Doc. 2012–15199 Filed 6–20–12; 8:45 am]

BILLING CODE 9110–04–P

DEPARTMENT OF HOMELAND SECURITY

Coast Guard

33 CFR Part 117

[Docket No. USCG–2012–0560]

Drawbridge Operation Regulation; Trent River, New Bern, NC

AGENCY: Coast Guard, DHS.

ACTION: Notice of temporary deviation from regulations.

SUMMARY: The Commander, Fifth Coast Guard District, has issued a temporary deviation from the regulation governing the operation of the Alfred C. Cunningham Bridge across the Trent River, mile 0.0, at New Bern, NC. The deviation allows the bridge draw span to remain in the closed to navigation position for 3 hours to accommodate the annual Neuse River Bridge Run.

DATES: This deviation is effective from 6:30 a.m. until 9:30 a.m. on October 20, 2012.

ADDRESSES: Documents mentioned in this preamble as being available in the docket USCG–2012–0560 and are available online by going to *http://www.regulations.gov,* inserting USCG–2012–0560 in the ''Keywords'' box, and then clicking ''Search''. This material is also available for inspection or copying the Docket Management Facility (M–30), U.S. Department of Transportation, West Building Ground Floor, Room W12–140, 1200 New Jersey Avenue SE., Washington, DC 20590, between 9 a.m. and 5 p.m., Monday through Friday, except Federal holidays.

FOR FURTHER INFORMATION CONTACT: If you have questions on this rule, call or email Mr. Jim Rousseau, Bridge Management Specialist, Fifth Coast Guard District, telephone (757) 398–6557. Email *James.L.Rousseau2@uscg.mil.* If you have questions on reviewing the docket, call Renee V. Wright, Program Manager, Docket Operations, (202) 366–9826.

SUPPLEMENTARY INFORMATION: The Event Director for the Neuse River Bridge Run, with approval from the North Carolina Department of Transportation, owner of the drawbridge, has requested a temporary deviation from the current operating schedule to accommodate the Neuse River Bridge Run.

The Alfred C. Cunningham Bridge operating regulations are set out in 33 CFR 117.843(a). The Alfred C. Cunningham Bridge across the Trent River, mile 0.0, a double bascule lift Bridge, in New Bern, NC, has a vertical

clearance in the closed position of 14 feet, above mean high water.

Under this temporary deviation, the drawbridge will be allowed to remain in the closed-to-navigation position from 6:30 a.m. to 9:30 a.m. on Saturday, October 20, 2012 to accommodate the Neuse River Bridge Run.

Vessels able to pass under the closed span may transit under the drawbridge while it is in the closed position. Mariners are advised to proceed with caution. The Coast Guard will inform users of the waterway through our local and broadcast Notices to Mariners of the limited operating schedule for the drawbridge so that vessels can arrange their transits to minimize any impacts caused by the temporary deviation. There are no alternate routes for vessels and the bridge will be able to open in the event of an emergency.

In accordance with 33 CFR 117.35(e), the drawbridge must return to its regular operating schedule immediately at the end of the designated time period.

This deviation from the operating regulations is authorized under 33 CFR 117.35.

Dated: June 12, 2012.

Waverly W. Gregory, Jr.,

Bridge Program Manager, Fifth Coast Guard District.

[FR Doc. 2012–15201 Filed 6–20–12; 8:45 am]

BILLING CODE 9110–04–P

DEPARTMENT OF HOMELAND SECURITY

Coast Guard

33 CFR Part 117

[Docket No. USCG–2012–0525]

Drawbridge Operation Regulation; Lake Washington, Seattle, WA

AGENCY: Coast Guard, DHS.

ACTION: Notice of temporary deviation from regulations.

SUMMARY: The Coast Guard has issued a temporary deviation from the operating schedule that governs the State Route 520 (SR 520) Bridge across Lake Washington at Seattle, WA. This deviation is necessary to accommodate the running of the Seafair Rock and Roll Marathon. This deviation allows the bridge to remain in the closed position to allow safe movement of event participants.

DATES: This deviation is effective from 10 a.m. on June 23, 2012 through 4 p.m. June 23, 2012.

ADDRESSES: Documents mentioned in this preamble as being available in the docket are part of docket USCG–2012–0525 and are available online by going to *http://www.regulations.gov,* inserting USCG–2012–0525 in the ''Keyword'' box and then clicking ''Search''. They are also available for inspection or copying at the Docket Management Facility (M–30), U.S. Department of Transportation, West Building Ground Floor, Room W12–140, 1200 New Jersey Avenue SE., Washington, DC 20590, between 9 a.m. and 5 p.m., Monday through Friday, except Federal holidays.

FOR FURTHER INFORMATION CONTACT: If you have questions on this rule, call or email the Bridge Administrator, Coast Guard Thirteenth District; telephone 206–220–7282 email *randall.d.overton@uscg.mil.* If you have questions on viewing the docket, call Renee V. Wright, Program Manager, Docket Operations, telephone 202–366–9826.

SUPPLEMENTARY INFORMATION: The Washington State Department of Transportation has requested that the draw span of the SR 520 Bridge remain closed to vessel traffic to facilitate safe passage of participants of the Seafair Rock and Roll Marathon. The Rock and Roll Marathon is the largest distance running event in the Pacific Northwest. This event includes over 26,000 participants running a marathon (26.2 miles) or half marathon (13.1 miles). The race course passes over the SR 520 Lake Washington Bridge. The SR 520 Bridge provides three navigational openings for vessel passage, the movable floating span, subject to this closure, and two fixed navigational openings; one on the east end of the bridge and one on the west end. The fixed navigational opening on the east end of the bridge provides a horizontal clearance of 207 feet and a vertical clearance of 57 feet. The opening on the west end of the bridge provides a horizontal clearance of 206 feet and a vertical clearance of 44 feet. Vessels that are able to safely pass through the fixed navigational openings are allowed to do so during this closure period. Under normal conditions, during this time frame, the bridge operates in accordance with 33 CFR 117.1049(a) which states the bridge shall open on signal if at least two hours notice is given. This deviation period is from 10 a.m. on June 23, 2012 through 4 p.m. June 23, 2012. The deviation allows the floating draw span of the SR 520 Lake Washington Bridge to remain in the closed position and need not open for maritime traffic from 10 a.m. through 4 p.m. on June 23, 2012. The bridge shall operate in accordance to 33 CFR § 117.1049(a) at all other times. Waterway usage on the Lake Washington Ship ranges from commercial tug and barge to small pleasure craft. Mariners will be notified and kept informed of the bridge's operational status via the Coast Guard Notice to Mariners publication and Broadcast Notice to Mariners as appropriate. The draw span will be required to open, if needed, for vessels engaged in emergency response operations during this closure period.

In accordance with 33 CFR 117.35(e), the drawbridge must return to its regular operating schedule immediately at the end of the designated time period. This deviation from the operating regulations is authorized under 33 CFR 117.35.

Dated: June 8, 2012.

Randall D. Overton,

Bridge Administrator.

[FR Doc. 2012–15191 Filed 6–20–12; 8:45 am]

BILLING CODE 9110–04–P

DEPARTMENT OF HOMELAND SECURITY

Coast Guard

33 CFR Part 117

[Docket No. USCG–2012–0517]

Drawbridge Operation Regulations; Merrimack River, Haverhill and West Newbury, MA

AGENCY: Coast Guard, DHS.

ACTION: Notice of temporary deviation from regulations.

SUMMARY: The Commander, First Coast Guard District, has issued a temporary deviation from the regulation governing the operation of the Rocks Village Bridge, mile 12.6, across the Merrimack River between Haverhill and West Newbury, Massachusetts. The deviation is necessary to facilitate bridge rehabilitation and repairs. This deviation allows the bridge to remain in the closed position for 72 hours.

DATES: This deviation is effective from 7 a.m. on July 9, 2012 through 7 a.m. on July 12, 2012.

ADDRESSES: Documents mentioned in this preamble as being available in the docket are part of docket USCG–2012–0517 and are available online at *www.regulations.gov,* inserting USCG–2012–0517 in the ''Keyword'' and then clicking ''Search.'' They are also available for inspection or copying at the Docket Management Facility (M–30), U.S. Department of Transportation, West Building Ground Floor, Room W12–140, 1200 New Jersey Avenue SE., Washington, DC 20590, between 9 a.m.

and 5 p.m., Monday through Friday, except Federal holidays.

FOR FURTHER INFORMATION CONTACT: If you have questions on this rule, call or email Mr. John McDonald, Project Officer, First Coast Guard District, *john.w.mcdonald@uscg.mil* or telephone (617) 223–8364. If you have questions on viewing the docket, call Renee V. Wright, Program Manager, Docket Operations, telephone 202–366–9826.

SUPPLEMENTARY INFORMATION: The Rocks Village Bridge, across the Merrimack River, mile 12.6, between Haverhill and West Newbury, Massachusetts, has a vertical clearance in the closed position of 17 feet at mean high water and 23 feet at mean low water. The drawbridge operation regulations are listed at 33 CFR 117.605(c).

The waterway is predominantly transited by small recreational vessels at the location of the Rocks Village Bridge.

The bridge is required to open upon a two hour advance notice as a result of infrequent requests to open the draw.

The owner of the bridge, Massachusetts Department of Transportation, requested a temporary deviation from the regulations to facilitate bridge rehabilitation repairs, replacement of operating machinery, structural steel, and highway deck on the swing span.

Under this temporary deviation the bridge may remain in the closed position from 7 a.m. on July 9, 2012 through 7 a.m. on July 12, 2012. Vessels that can pass under the closed draw may do so at all times.

In accordance with 33 CFR 117.35(e), the bridge must return to its regular operating schedule immediately at the end of the designated time period. This deviation from the operating regulations is authorized under 33 CFR 117.35.

Dated: June 7, 2012.

Gary Kassof,

Bridge Program Manager, First Coast Guard District.

[FR Doc. 2012–15202 Filed 6–20–12; 8:45 am]

BILLING CODE 9110–04–P

DEPARTMENT OF HOMELAND SECURITY

Coast Guard

33 CFR Part 165

[Docket No. USCG–2012–0430]

RIN 1625–AA00

Eighth Coast Guard District Annual Safety Zones; Fourth of July Celebration; Santa Rosa Sound; Fort Walton Beach, FL

AGENCY: Coast Guard, DHS.

ACTION: Notice of enforcement of regulation.

SUMMARY: The Coast Guard will enforce a Safety Zone for the Fourth of July Celebration in the Santa Rosa Sound, Fort Walton Beach, Florida from 9 p.m. until 10 p.m. on July 4, 2012. This action is necessary for the safeguard of participants and spectators, including all crews, vessels, and persons on navigable waters during the Fourth of July Celebration. During the enforcement period, entry into, transiting or anchoring in the Safety Zone is prohibited to all vessels not registered with the sponsor as participants or official patrol vessels, unless specifically authorized by the Captain of the Port (COTP) Mobile or a designated representative.

DATES: The regulations in 33 CFR 165.801 will be enforced from 9 p.m. until 10 p.m. on July 4, 2012.

FOR FURTHER INFORMATION CONTACT: If you have questions on this notice of enforcement, call or email LT Lenell J. Carson, Coast Guard Sector Mobile, Waterways Division; telephone 251–441–5940 or email *Lenell.J.Carson@uscg.mil.*

SUPPLEMENTARY INFORMATION: The Coast Guard will enforce the Safety Zone for the annual Fourth of July Celebration event listed in 33 CFR 165.801 Table 1, Table No. 146; Sector Mobile, No. 5 on July 4, 2012 from 9 p.m. until 10 p.m.

Under the provisions of 33 CFR 165.801, entry into the safety zone listed in Table 1, Table No. 146; Sector Mobile, No. 5 is prohibited unless authorized by the Captain of the Port or a designated representative. Persons or vessels desiring to enter into or passage through the Safety Zone must request permission from the Captain of the Port or a designated representative. If permission is granted, all persons and vessels shall comply with the instructions of the Captain of the Port or designated representative.

This notice is issued under authority of 5 U.S.C. 552(a); 33 U.S.C. 1231; 46 U.S.C. Chapter 701, 3306, 3703; 50 U.S.C. 191, 195; 33 CFR 1.05–1, 6.04–1, 6.04–6, and 160.5; Pub. L. 107–295, 116 Stat. 2064; Department of Homeland Security Delegation No. 0170.1. In addition to this notice in the **Federal Register**, the Coast Guard will provide the maritime community with advance notification of this enforcement period via Local Notice to Mariners and Marine Information Broadcasts.

If the Captain of the Port Mobile or Patrol Commander determines that the Safety Zone need not be enforced for the full duration stated in this notice of enforcement, he or she may use a Broadcast Notice to Mariners to grant general permission to enter the regulated area.

Dated: May 31, 2012.

D.J. Rose,

Captain, U.S. Coast Guard, Captain of the Port Mobile.

[FR Doc. 2012–15159 Filed 6–20–12; 8:45 am]

BILLING CODE 9110–04–P

DEPARTMENT OF HOMELAND SECURITY

Coast Guard

33 CFR Part 165

[Docket No. USCG–2012–0474]

RIN 1625–AA00

Eighth Coast Guard District Annual Safety Zones; Sound of Independence; Santa Rosa Sound; Fort Walton Beach, FL

AGENCY: Coast Guard, DHS.

ACTION: Notice of enforcement of regulation.

SUMMARY: The Coast Guard will enforce a Safety Zone for the Sound of Independence event in the Santa Rosa Sound, Fort Walton Beach, Florida from 9 p.m. until 9:30 p.m. on June 29, 2012. This action is necessary for the safeguard of participants and spectators, including all crews, vessels, and persons on navigable waters during the Sound of Independence. During the enforcement period, entry into, transiting or anchoring in the Safety Zone is prohibited to all vessels not registered with the sponsor as participants or official patrol vessels, unless specifically authorized by the Captain of the Port (COTP) Mobile or a designated representative.

DATES: The regulations in 33 CFR 165.801 will be enforced from 9 p.m. until 9:30 p.m. on June 29, 2012.

FOR FURTHER INFORMATION CONTACT: If you have questions on this notice of

enforcement, call or email LT Lenell J. Carson, Coast Guard Sector Mobile, Waterways Division; telephone 251–441–5940 or email *Lenell.J.Carson@uscg.mil.*

SUPPLEMENTARY INFORMATION: The Coast Guard will enforce the Safety Zone for the annual Sound of Independence event listed in 33 CFR 165.801 Table 1, Table No. 147; Sector Mobile, No. 6 on June 29, 2012 from 9 p.m. until 9:30 p.m.

Under the provisions of 33 CFR 165.801, entry into the safety zone listed in Table 1, Table No. 147; Sector Mobile, No. 6 is prohibited unless authorized by the Captain of the Port or a designated representative. Persons or vessels desiring to enter into or passage through the Safety Zone must request permission from the Captain of the Port or a designated representative. If permission is granted, all persons and vessels shall comply with the instructions of the Captain of the Port or designated representative.

This notice is issued under authority of 5 U.S.C. 552 (a); 33 U.S.C. 1231; 46 U.S.C. Chapter 701, 3306, 3703; 50 U.S.C. 191, 195; 33 CFR 1.05–1, 6.04–1, 6.04–6, and 160.5; Pub. L. 107–295, 116 Stat. 2064; Department of Homeland Security Delegation No. 0170.1. In addition to this notice in the **Federal Register**, the Coast Guard will provide the maritime community with advance notification of this enforcement period via Local Notice to Mariners and Marine Information Broadcasts.

If the Captain of the Port Mobile or Patrol Commander determines that the Safety Zone need not be enforced for the full duration stated in this notice of enforcement, he or she may use a Broadcast Notice to Mariners to grant general permission to enter the regulated area.

Dated: May 31, 2012.

D.J. Rose,

Captain, U.S. Coast Guard, Captain of the Port Mobile.

[FR Doc. 2012–15160 Filed 6–20–12; 8:45 am]

BILLING CODE 9110–04–P

DEPARTMENT OF HOMELAND SECURITY

Coast Guard

33 CFR Part 165

[Docket No. USCG–2012–0543]

RIN 1625–AA00

Safety Zone for Fifth Coast Guard District Fireworks Display Pasquotank River; Elizabeth City, NC

AGENCY: Coast Guard, DHS.

ACTION: Temporary final rule.

SUMMARY: The Coast Guard is temporarily changing the enforcement location of a safety zone for one specific recurring fireworks display in the Fifth Coast Guard District. This regulation applies to only one recurring fireworks event, held adjacent to the Pasquotank River, Elizabeth City, North Carolina. The fireworks display ordinarily originated from a location on land but will this year originate from a barge; the safety zone is necessary to provide for the safety of life on navigable waters during the event. This action is intended to restrict vessel traffic in a portion of the Pasquotank River, Elizabeth City, North Carolina, during the event.

DATES: This rule will be effective from July 4, 2012 through July 5, 2012.

ADDRESSES: Documents mentioned in this preamble are part of docket [USCG–2012–0543]. To view documents mentioned in this preamble as being available in the docket, go to *http://www.regulations.gov,* type the docket number in the ''SEARCH'' box and click ''SEARCH.'' Click on Open Docket Folder on the line associated with this rulemaking. You may also visit the Docket Management Facility in Room W12–140 on the ground floor of the Department of Transportation West Building, 1200 New Jersey Avenue SE., Washington, DC 20590, between 9 a.m. and 5 p.m., Monday through Friday, except Federal holidays.

FOR FURTHER INFORMATION CONTACT: If you have questions on this rule, call or email CWO4 Joseph M. Edge, U.S. Coast Guard Sector North Carolina; telephone 252–247–4525, email *Joseph.M.Edge@uscg.mil.* If you have questions on viewing or submitting material to the docket, call Renee V. Wright, Program Manager, Docket Operations, telephone (202) 366–9826.

SUPPLEMENTARY INFORMATION:

Table of Acronyms

DHS Department of Homeland Security
FR **Federal Register**
NPRM Notice of Proposed Rulemaking

A. Regulatory History and Information

This fireworks display event is regulated at 33 CFR 165.506, Table to § 165.506, section (d.) line 4. The Coast Guard plans to permanently amend the regulation at 33 CFR 165.506 at a later date to reflect this change.

The Coast Guard is issuing this temporary final rule without prior notice and opportunity to comment pursuant to authority under section 4(a) of the Administrative Procedure Act (APA) (5 U.S.C. 553(b)). This provision authorizes an agency to issue a rule without prior notice and opportunity to comment when the agency for good cause finds that those procedures are ''impracticable, unnecessary, or contrary to the public interest.'' Under 5 U.S.C. 553(b)(B), the Coast Guard finds that good cause exists for not publishing a notice of proposed rulemaking (NPRM) with respect to this rule because immediate action is needed to minimize potential danger to the public during the event. For this reason, it would be impracticable to publish an NPRM for this rule.

B. Basis and Purpose

Recurring fireworks displays are frequently held on or adjacent to the navigable waters within the boundary of the Fifth Coast Guard District. For a description of the geographical area of each Coast Guard Sector—Captain of the Port Zone, please see 33 CFR 3.25.

The regulation listing annual fireworks displays within the Fifth Coast Guard District and safety zones locations is 33 CFR 165.506. The Table to § 165.506 identifies fireworks displays by COTP zone, with the COTP North Carolina zone listed in section ''(d.)'' of the Table.

The township of Elizabeth City, North Carolina, sponsors an annual fireworks display held on July 4th over the waters of Pasquotank River at Elizabeth City, North Carolina. The Table to § 165.506, at section (d.) event Number ''4'', describes the enforcement date and regulated location for this fireworks event.

The location listed in the Table has the fireworks display originating from position latitude 36°18′00″ N, longitude 076°13′00″ W, a location on land on the southwest corner of Machelhe Island at Elizabeth City, North Carolina. However, this event changes the fireworks launch location on July 4, 2012, to a position on the Pasquotank River at latitude 36°17′47″ N, longitude 076°12′17″ W.

A fleet of spectator vessels is anticipated to gather nearby to view the

fireworks display. Due to the need for vessel control during the fireworks display vessel traffic will be temporarily restricted to provide for the safety of participants, spectators and transiting vessels. Under provisions of 33 CFR 165.506, during the enforcement period, vessels may not enter the regulated area unless they receive permission from the Coast Guard Patrol Commander.

C. Discussion of the Final Rule

The Coast Guard will temporarily suspend the regulation listed in Table to § 165.506, section (d.) event Number 4, and insert this temporary regulation at Table to § 165.506, at section (d.) as event Number ''15'', in order to reflect that the fireworks display will originate from a barge in the Pasquotank River and therefore the regulated area is changed. This change is needed to accommodate the sponsor's event plan. No other portion of the Table to § 165.506 or other provisions in § 165.506 shall be affected by this regulation.

The regulated area of this safety zone includes all water of the Currituck Sound within a 300 yards radius of latitude 36°17′47″ N, longitude 076°12′17″ W.

This safety zone will restrict general navigation in the regulated area during the fireworks event. Except for persons or vessels authorized by the Coast Guard Patrol Commander, no person or vessel may enter or remain in the regulated area during the effective period. The regulated area is needed to control vessel traffic during the event for the safety of participants and transiting vessels.

The enforcement period for this safety zone does not change from that enforcement period listed in § 165.506(d) line 4. Therefore, this safety zone will be enforced from 5:30 p.m. on July 4, 2012 through 1 a.m. on July 5, 2012.

In addition to notice in the **Federal Register**, the maritime community will be provided extensive advance notification via the Local Notice to Mariners, and marine information broadcasts so mariners can adjust their plans accordingly.

D. Regulatory Analyses

We developed this rule after considering numerous statutes and executive orders related to rulemaking. Below we summarize our analyses based on 13 of these statutes or executive orders.

1. Regulatory Planning and Review

This rule is not a significant regulatory action under section 3(f) of Executive Order 12866, Regulatory Planning and Review, as supplemented by Executive Order 13563, Improving Regulation and Regulatory Review, and does not require an assessment of potential costs and benefits under section 6(a)(3) of Executive Order 12866 or under section 1 of Executive Order 13563. The Office of Management and Budget has not reviewed it under those Orders.

This rule prevents traffic from transiting a portion of the Pasquotank River during the specified event, the effect of this regulation will not be significant due to the limited duration that the regulated area will be in effect and the extensive advance notifications that will be made to the maritime community via marine information broadcasts, local radio stations and area newspapers so mariners can adjust their plans accordingly. Additionally, this rulemaking changes the regulated area for the Pasquotank River fireworks demonstration for July 4, 2011 only and does not change the permanent regulated area that has been published in 33 CFR 165.506, Table to § 165.506 at portion ''d'' event Number ''4''. In some cases vessel traffic may be able to transit the regulated area when the Coast Guard Patrol Commander deems it is safe to do so.

2. Impact on Small Entities

The Regulatory Flexibility Act of 1980 (RFA), 5 U.S.C. 601–612, as amended, requires federal agencies to consider the potential impact of regulations on small entities during rulemaking. The Coast Guard certifies under 5 U.S.C. 605(b) that this rule will not have a significant economic impact on a substantial number of small entities.

This rule would affect the following entities, some of which might be small entities: The owners or operators of vessels intending to transit or anchor in the Pasquotank River where fireworks events are being held. This regulation will not have a significant impact on a substantial number of small entities because it will be enforced only during the fireworks display event that has been permitted by the Coast Guard Captain of the Port. The Captain of the Port will ensure that small entities are able to operate in the regulated area when it is safe to do so. In some cases, vessels will be able to safely transit around the regulated area at various times, and, with the permission of the Patrol Commander, vessels may transit through the regulated area. Before the enforcement period, the Coast Guard will issue maritime advisories so mariners can adjust their plans accordingly.

3. Assistance for Small Entities

Under section 213(a) of the Small Business Regulatory Enforcement Fairness Act of 1996 (Pub. L. 104–121), we want to assist small entities in understanding this rule. If the rule would affect your small business, organization, or governmental jurisdiction and you have questions concerning its provisions or options for compliance, please contact the person listed in the **FOR FURTHER INFORMATION CONTACT**, above.

Small businesses may send comments on the actions of Federal employees who enforce, or otherwise determine compliance with, Federal regulations to the Small Business and Agriculture Regulatory Enforcement Ombudsman and the Regional Small Business Regulatory Fairness Boards. The Ombudsman evaluates these actions annually and rates each agency's responsiveness to small business. If you wish to comment on actions by employees of the Coast Guard, call 1–888–REG–FAIR (1–888–734–3247). The Coast Guard will not retaliate against small entities that question or complain about this rule or any policy or action of the Coast Guard.

4. Collection of Information

This rule will not call for a new collection of information under the Paperwork Reduction Act of 1995 (44 U.S.C. 3501–3520).

5. Federalism

A rule has implications for federalism under Executive Order 13132, Federalism, if it has a substantial direct effect on the States, on the relationship between the national government and the States, or on the distribution of power and responsibilities among the various levels of government. We have analyzed this rule under that Order and determined that this rule does not have implications for federalism.

6. Protest Activities

The Coast Guard respects the First Amendment rights of protesters. Protesters are asked to contact the person listed in the **FOR FURTHER INTFORMATION CONTACT** section to coordinate protest activities so that your message can be received without jeopardizing the safety or security of people, places or vessels.

7. Unfunded Mandates Reform Act

The Unfunded Mandates Reform Act of 1995 (2 U.S.C. 1531–1538) requires Federal agencies to assess the effects of their discretionary regulatory actions. In particular, the Act addresses actions that may result in the expenditure by a

State, local, or tribal government, in the aggregate, or by the private sector of $100,000,000 (adjusted for inflation) or more in any one year. Though this rule will not result in such an expenditure, we do discuss the effects of this rule elsewhere in this preamble.

8. Taking of Private Property

This rule will not cause a taking of private property or otherwise have taking implications under Executive Order 12630, Governmental Actions and Interference with Constitutionally Protected Property Rights.

9. Civil Justice Reform

This rule meets applicable standards in sections 3(a) and 3(b)(2) of Executive Order 12988, Civil Justice Reform, to minimize litigation, eliminate ambiguity, and reduce burden.

10. Protection of Children

We have analyzed this rule under Executive Order 13045, Protection of Children from Environmental Health Risks and Safety Risks. This rule is not an economically significant rule and does not create an environmental risk to health or risk to safety that may disproportionately affect children.

11. Indian Tribal Governments

This rule does not have tribal implications under Executive Order 13175, Consultation and Coordination with Indian Tribal Governments, because it does not have a substantial direct effect on one or more Indian tribes, on the relationship between the Federal Government and Indian tribes, or on the distribution of power and responsibilities between the Federal Government and Indian tribes.

12. Energy Effects

This action is not a ''significant energy action'' under Executive Order 13211, Actions Concerning Regulations That Significantly Affect Energy Supply, Distribution, or Use.

13. Technical Standards

This rule does not use technical standards. Therefore, we did not consider the use of voluntary consensus standards.

14. Environment

We have analyzed this rule under Department of Homeland Security Management Directive 023–01 and Commandant Instruction M16475.lD, which guide the Coast Guard in complying with the National Environmental Policy Act of 1969 (NEPA) (42 U.S.C. 4321–4370f), and have determined that this action is one of a category of actions that do not individually or cumulatively have a significant effect on the human environment. This rule involves the establishment of safety zones. This rule is categorically excluded from further review under paragraph 34(g) of Figure 2–1 of the Commandant Instruction. An environmental analysis checklist supporting this determination and a Categorical Exclusion Determination are available in the docket where indicated under **ADDRESSES**. We seek any comments or information that may lead to the discovery of a significant environmental impact from this rule.

List of Subjects in 33 CFR Part 165

Harbors, Marine safety, Navigation (water), Reporting and recordkeeping requirements, Security measures, Waterways.

For the reasons discussed in the preamble, the Coast Guard amends 33 CFR part 165 as follows:

PART 165—REGULATED NAVIGATION AREAS AND LIMITED ACCESS AREAS

■ 1. The authority citation for part 165 continues to read as follows:

Authority: 33 U.S.C. 1231; 46 U.S.C. Chapter 701, 3306, 3703; 50 U.S.C. 191, 195; 33 CFR 1.05–1, 6.04–1, 6.04–6, 160.5; Pub. L. 107–295, 116 Stat. 2064; Department of Homeland Security Delegation No. 0170.1.

■ 2. Amend the Table to § 165.506 as follows:

■ a. Under ''(d) Coast Guard Sector North Carolina—COTP Zone,'' suspend entry 4.

■ b. Under, ''(d) Coast Guard Sector North Carolina—COTP Zone,'' add entry 15, to read as follows:

§ 165.506 Safety Zones; Fifth Coast Guard District Fireworks Displays.

* * * * *

Number	Date	Location	Regulated area
*	*	*	*
(d) Coast Guard Sector North Carolina—COTP Zone			
*	*	*	*
15	July 4–5, 2012	Pasquotank River, Elizabeth City, NC, Safety Zone.	All waters of the Pasquotank River within a 300 yard radius of the fireworks launch barge in approximate position latitude 36°17′47″ N, longitude 076°12′17″, located near Machelhe Island.

Dated: June 11, 2012.

A. Popiel,

Captain, U.S. Coast Guard, Captain of the Port Sector North Carolina.

[FR Doc. 2012–15107 Filed 6–20–12; 8:45 am]

BILLING CODE 9110–04–P

DEPARTMENT OF HOMELAND SECURITY

Coast Guard

33 CFR Part 165

[Docket Number USCG–2012–0491]

RIN 1625–AA00

Safety Zone, Barrel Recovery, Lake Superior; Duluth, MN

AGENCY: Coast Guard, DHS.

ACTION: Temporary final rule.

SUMMARY: The Coast Guard is establishing a temporary safety zone surrounding Tug Champion (O.N. 55 6Z93)/Barge Kokosing (O.N. 1144055) while they conduct recovery and testing of barrels suspected to contain munitions waste materials which were dumped in the 1960's in a portion of Lake Superior approximately between Stoney Point and Brighton Beach, Duluth, MN. This safety zone is precautionary to protect recreational vessels and marine traffic from any unknown hazards as well as provide a

safe work zone for contractor operations.

DATES: This rule will be effective from July 16, 2012, to August 6, 2012.

ADDRESSES: Documents mentioned in this preamble are part of docket [USCG–2012–0491]. To view documents mentioned in this preamble as being available in the docket, go to *http://www.regulations.gov,* type the docket number in the ''SEARCH'' box and click ''SEARCH.'' Click on Open Docket Folder on the line associated with this rulemaking. You may also visit the Docket Management Facility in Room W12–140 on the ground floor of the Department of Transportation West Building, 1200 New Jersey Avenue SE., Washington, DC 20590, between 9 a.m. and 5 p.m., Monday through Friday, except Federal holidays.

FOR FURTHER INFORMATION CONTACT: If you have questions on this rule, call or email Lieutenant Judson Coleman, Chief of Waterways Management, U.S. Coast Guard Marine Safety Unit Duluth; telephone number (218) 720–5286, extension 111, email at *Judson.A.Coleman@uscg.mil*. If you have questions on viewing or submitting material to the docket, call Renee V. Wright, Program Manager, Docket Operations, telephone (202) 366–9826.

SUPPLEMENTARY INFORMATION:

Table of Acronyms

DHS Department of Homeland Security
FR **Federal Register**
NPRM Notice of Proposed Rulemaking

A. Regulatory History and Information

The Coast Guard is issuing this temporary final rule without prior notice and opportunity to comment pursuant to authority under section 4(a) of the Administrative Procedure Act (APA) (5 U.S.C. 553(b)). This provision authorizes an agency to issue a rule without prior notice and opportunity to comment when the agency for good cause finds that those procedures are ''impracticable, unnecessary, or contrary to the public interest.'' Under 5 U.S.C. 553(b)(B), the Coast Guard finds that good cause exists for not publishing a notice of proposed rulemaking (NPRM) with respect to this rule because the final details for this event were not known to the Coast Guard until there was insufficient time remaining before the event to publish an NPRM. Thus, delaying the effective date of this rule to wait for a comment period to run would be impracticable because it would inhibit the Coast Guard's ability to protect vessels from the hazards associated with recovery of possible munitions waste, which are discussed further below.

Under 5 U.S.C. 553(d)(3), the Coast Guard finds that good cause exists for making this rule effective less than 30 days after publication in the **Federal Register**. For the same reasons discussed in the preceding paragraph, waiting for a 30 day notice period to run would also be impracticable and contrary to the public interest.

B. Basis and Purpose

From July 16th, 2012 to August 6th, 2012, the Tug Champion (O.N. 55 6Z93)/Barge Kokosing (O.N. 1144055) will recover and test barrels suspected to contain munitions waste materials dumped offshore in a portion of Lake Superior approximately 50 years ago.

C. Discussion of the Final Rule

The following area is a temporary safety zone: All waters within a 700 foot radius of the Tug Champion (O.N. 55 6Z93)/Barge Kokosing (O.N. 1144055) as it conducts recovery and testing of barrels suspected of containing munitions waste materials in the area between Stoney Point and Brighton Beach, up to approximately 4 miles offshore on Lake Superior, Duluth, MN. This safety zone will be in effect and enforced 24 hours a day from on or around July 16th, 2012, to August 6th, 2012.

This rule is deemed necessary in order to protect vessels transiting Lake Superior in close proximity to the Tug Champion (O.N. 55 6Z93)/Barge Kokosing (O.N. 1144055) from exposure to possible unknown hazards as it conducts recovery and testing of barrels containing munitions parts and product line debris. This zone does not have specific coordinates because the Tug Champion (O.N. 55 6Z93)/Barge Kokosing (O.N. 1144055) will be recovering barrels in several locations over the course of the effective period and a safety zone encompassing the entire recovery area would have a negative impact on recreational vessel traffic.

D. Regulatory Analyses

We developed this rule after considering numerous statutes and executive orders related to rulemaking. Below we summarize our analyses based on 13 of these statutes or executive orders.

1. Regulatory Planning and Review

This rule is not a significant regulatory action under section 3(f) of Executive Order 12866, Regulatory Planning and Review, as supplemented by Executive Order 13563, Improving Regulation and Regulatory Review, and does not require an assessment of potential costs and benefits under section 6(a)(3) of Executive Order 12866 or under section 1 of Executive Order 13563. The Office of Management and Budget has not reviewed it under those Orders. This rule will have minimal impact on economic interests due to the safety zone being outside commercial shipping lanes, having little impact on recreational vessel traffic and being in effect for a limited period of time.

2. Impact on Small Entities

The Regulatory Flexibility Act of 1980 (RFA), 5 U.S.C. 601–612, as amended, requires federal agencies to consider the potential impact of regulations on small entities during rulemaking. The Coast Guard certifies under 5 U.S.C. 605(b) that this rule will not have a significant economic impact on a substantial number of small entities.

(1) This rule would affect the following entities, some of which might be small entities: the owners or operators of recreational vessels intending to transit or anchor in a portion of Lake Superior between Stoney Point and Brighton Beach from July 16th, 2012 to August 6th, 2012.

(2) This safety zone would not have a significant economic impact on a substantial number of small entities for the following reasons. This safety zone would be activated, and thus subject to enforcement, in areas where vessel traffic is low and not subject to commercial traffic. Recreational vessel traffic could pass safely around the safety zone due to its relatively small size. This safety zone will be announced in the Local Notice to Mariners and via Broadcast Notice to Mariners before activation of the zone and throughout the enforcement period.

3. Assistance for Small Entities

Under section 213(a) of the Small Business Regulatory Enforcement Fairness Act of 1996 (Pub. L. 104–121), we want to assist small entities in understanding this rule. If the rule would affect your small business, organization, or governmental jurisdiction and you have questions concerning its provisions or options for compliance, please contact the person listed in the **FOR FURTHER INFORMATION CONTACT** section, above.

Small businesses may send comments on the actions of Federal employees who enforce, or otherwise determine compliance with, Federal regulations to the Small Business and Agriculture Regulatory Enforcement Ombudsman and the Regional Small Business Regulatory Fairness Boards. The

Ombudsman evaluates these actions annually and rates each agency's responsiveness to small business. If you wish to comment on actions by employees of the Coast Guard, call 1–888–REG–FAIR (1–888–734–3247). The Coast Guard will not retaliate against small entities that question or complain about this rule or any policy or action of the Coast Guard.

4. Collection of Information

This rule will not call for a new collection of information under the Paperwork Reduction Act of 1995 (44 U.S.C. 3501–3520).

5. Federalism

A rule has implications for federalism under Executive Order 13132, Federalism, if it has a substantial direct effect on the States, on the relationship between the national government and the States, or on the distribution of power and responsibilities among the various levels of government. We have analyzed this rule under that Order and determined that this rule does not have implications for federalism.

6. Protest Activities

The Coast Guard respects the First Amendment rights of protesters. Protesters are asked to contact the person listed in the **FOR FURTHER INFORMATION CONTACT** section so that the Coast Guard may consider the degree to which it may accommodate such activities while also providing for the safety and security of people, places and vessels.

7. Unfunded Mandates Reform Act

The Unfunded Mandates Reform Act of 1995 (2 U.S.C. 1531–1538) requires Federal agencies to assess the effects of their discretionary regulatory actions. In particular, the Act addresses actions that may result in the expenditure by a State, local, or tribal government, in the aggregate, or by the private sector of $100,000,000 (adjusted for inflation) or more in any one year. Though this rule will not result in such an expenditure, we do discuss the effects of this rule elsewhere in this preamble.

8. Taking of Private Property

This rule will not cause a taking of private property or otherwise have taking implications under Executive Order 12630, Governmental Actions and Interference With Constitutionally Protected Property Rights.

9. Civil Justice Reform

This rule meets applicable standards in sections 3(a) and 3(b)(2) of Executive Order 12988, Civil Justice Reform, to minimize litigation, eliminate ambiguity, and reduce burden.

10. Protection of Children

We have analyzed this rule under Executive Order 13045, Protection of Children From Environmental Health Risks and Safety Risks. This rule is not an economically significant rule and does not create an environmental risk to health or risk to safety that may disproportionately affect children.

11. Indian Tribal Governments

This rule does not have tribal implications under Executive Order 13175, Consultation and Coordination With Indian Tribal Governments, because it does not have a substantial direct effect on one or more Indian tribes, on the relationship between the Federal Government and Indian tribes, or on the distribution of power and responsibilities between the Federal Government and Indian tribes.

12. Energy Effects

This action is not a ''significant energy action'' under Executive Order 13211, Actions Concerning Regulations That Significantly Affect Energy Supply, Distribution, or Use.

13. Technical Standards

This rule does not use technical standards. Therefore, we did not consider the use of voluntary consensus standards.

14. Environment

We have analyzed this rule under Department of Homeland Security Management Directive 023–01 and Commandant Instruction M16475.lD, which guide the Coast Guard in complying with the National Environmental Policy Act of 1969 (NEPA) (42 U.S.C. 4321–4370f), and have determined that this action is one of a category of actions that do not individually or cumulatively have a significant effect on the human environment. This rule involves establishing a safety zone surrounding Tug Champion (O.N. 55 6Z93)/Barge Kokosing (O.N. 1144055) as it conducts recovery and testing of barrels containing munitions parts and product line debris. This rule is categorically excluded from further review under paragraph 34(g) of Figure 2–1 of the Commandant Instruction. An environmental analysis checklist supporting this determination and a Categorical Exclusion Determination are available in the docket where indicated under **ADDRESSES**. We seek any comments or information that may lead to the discovery of a significant environmental impact from this rule.

List of Subjects in 33 CFR Part 165

Harbor, Marine safety, Navigation (water), Reporting and recordkeeping requirements, Security measures, Waterways.

For the reasons discussed in the preamble, the Coast Guard amends 33 CFR part 165 as follows:

PART 165—REGULATED NAVIGATION AREAS AND LIMITED ACCESS AREAS

■ 1. The authority citation for part 165 continues to read as follows:

Authority: 33 U.S.C. 1231; 46 U.S.C. Chapter 701, 3306, 3703; 50 U.S.C. 191, 195; 33 CFR 1.05–1, 6.04–1, 6.04–6, and 160.5; Pub L. 107–295, 116 Stat. 2064; Department of Homeland Security Delegation No. 0170.1.

■ 2. Add § 165.T09–0491 to read as follows:

§ 165.T09–0491 Safety zone; Barrel recover, Lake Superior, Duluth, MN.

(a) *Location.* The following area is a temporary safety zone: All waters of Lake Superior within a 700 foot radius of a Tug Champion (O.N. 55 6Z93)/ Barge Kokosing (O.N. 1144055), including but not limited to up to four miles offshore from approximately Brighton Beach to Stoney Point on Lake Superior, Duluth, MN.

(b) *Effective and enforcement period.* This rule will be in effect and enforced 24 hours a day from July 16th, 2012 to August 6th, 2012.

(c) *Regulations.* (1) In accordance with the general regulations in section 165.23, entry into, transiting or anchoring within the safety zone is prohibited unless authorized by the Captain of the Port, Marine Safety Unit Duluth, or his/her designated representative.

(2) This safety zone is closed to all vessel traffic.

Dated: June 8, 2012.

K.R. Bryan,

Commander, U.S. Coast Guard, Captain of the Port, Marine Safety Unit Duluth.

[FR Doc. 2012–15110 Filed 6–20–12; 8:45 am]

BILLING CODE 9110–04–P

DEPARTMENT OF HOMELAND SECURITY

Coast Guard

33 CFR Part 165

[Docket Number USCG–2012–0515]

RIN 1625–AA00

Safety Zone; Major Motion Picture Filming, Cape Fear River; Wilmington, NC

AGENCY: Coast Guard, DHS.

ACTION: Temporary final rule.

SUMMARY: The Coast Guard is establishing a temporary safety zone on the Cape Fear River near Wilmington, North Carolina. The safety zone is intended to restrict vessels from a portion of the Cape Fear River due to the filming of a movie involving high speed boat chases and other dangerous stunts on water. The temporary safety zone is necessary to protect the surrounding public and vessels from the hazards associated with the stunts that will be performed on the river during the filming of this motion picture.

DATES: This rule is effective from August 2, 2012 through August 24, 2012.

ADDRESSES: Documents mentioned in this preamble are part of docket [USCG–2012–0515]. To view documents mentioned in this preamble as being available in the docket, go to *http://www.regulations.gov,* type the docket number in the ''SEARCH'' box and click ''SEARCH.'' Click on Open Docket Folder on the line associated with this rulemaking. You may also visit the Docket Management Facility in Room W12–140 on the ground floor of the Department of Transportation West Building, 1200 New Jersey Avenue SE., Washington, DC 20590, between 9 a.m. and 5 p.m., Monday through Friday, except Federal holidays.

FOR FURTHER INFORMATION CONTACT: If you have questions on this rule, call or email BOSN3 Joseph M. Edge, Coast Guard Sector North Carolina, Coast Guard; telephone 252–247–4525, email *Joseph.M.Edge@uscg.mil.* If you have questions on viewing or submitting material to the docket, call Renee V. Wright, Program Manager, Docket Operations, telephone (202) 366–9826.

SUPPLEMENTARY INFORMATION:

Table of Acronyms

DHS Department of Homeland Security
FR **Federal Register**
NPRM Notice of Proposed Rulemaking

A. Regulatory History and Information

The Coast Guard is issuing this temporary final rule without prior notice and opportunity to comment pursuant to authority under section 4(a) of the Administrative Procedure Act (APA) (5 U.S.C. 553(b)). This provision authorizes an agency to issue a rule without prior notice and opportunity to comment when the agency for good cause finds that those procedures are ''impracticable, unnecessary, or contrary to the public interest.'' Under 5 U.S.C. 553(b)(B), the Coast Guard finds that good cause exists for not publishing a notice of proposed rulemaking (NPRM) with respect to this rule because the final details for this event was not provided to the Coast Guard until May 30, 2012. As such, it is impracticable to provide a full comment period due to lack of time. In addition, given the high risks of injury and damage that will be created during the filming of the movie, a delay in enacting this safety zone would be contrary to public interest.

B. Basis and Purpose

The temporary safety zone is necessary to protect vessels from the hazards associated with the stunts that will be performed during the filming of a major motion picture. The filming will involve fast-paced, multi-vessel, highly choreographed stunts, with multiple water and air platforms interacting. The Captain of the Port, Sector North Carolina, has determined that the stunts associated with the filming of this motion picture do pose significant risks to public safety and property and that a safety zone is necessary.

C. Discussion of the Final Rule

The Coast Guard is establishing a temporary safety zone on the Cape Fear River at Wilmington, NC. This safety zone will be enforced at night, between 7:30 p.m. and 7:00 a.m. from August 2, 2012 until August 24, 2012 and encompasses all navigable waters from latitude 34°11′14″ North, longitude 077°57′26″ West to latitude 34°12′42″ North, 077°57′24″ West. [DATUM: NAD 83]

While the enforcement periods are scheduled for approximately 12 hour blocks, filming and execution of the stunts will not take place continuously during those periods. There will be periods of setup, breakdown, preparation, et cetera. It is anticipated that actual filming will take place in 20 minute increments throughout the enforcement periods and that, in some cases, the filming may end prior to the 7 a.m. enforcement deadlines. All persons and vessels shall comply with the instructions of the Captain of the Port, Sector North Carolina, or his or her on-scene representative. Entry into, transiting, or anchoring within the safety zone is prohibited unless authorized by the Captain of the Port, Sector North Carolina, or his or her on-scene representative. The Captain of the Port, Sector North Carolina, or his or her on-scene representative may be contacted via VHF–FM channel 16.

D. Regulatory Analyses

We developed this rule after considering numerous statutes and executive orders related to rulemaking. Below we summarize our analyses based on 13 of these statutes or executive orders.

1. Regulatory Planning and Review

This rule is not a significant regulatory action under section 3(f) of Executive Order 12866, Regulatory Planning and Review, as supplemented by Executive Order 13563, Improving Regulation and Regulatory Review, and does not require an assessment of potential costs and benefits under section 6(a)(3) of Executive Order 12866 or under section 1 of Executive Order 13563. The Office of Management and Budget has not reviewed it under those Orders.

Although this regulation will restrict access to the area, the effect of the rule will not be significant since this rule will only be enforced while unsafe conditions exist. The Coast Guard also expects that traffic will generally be very low based on the time of night that this closure will occur.

2. Impact on Small Entities

The Regulatory Flexibility Act of 1980 (RFA), 5 U.S.C. 601–612, as amended, requires federal agencies to consider the potential impact of regulations on small entities during rulemaking. The Coast Guard certifies under 5 U.S.C. 605(b) that this rule will not have a significant economic impact on a substantial number of small entities.

This rule may affect the following entities, some of which might be small entities: The owners or operators of vessels intending to transit or anchor in this portion of the Cape Fear River from 7:30 p.m. to 7:00 a.m. between August 2, 2012 and August 24, 2012.

The safety zone will not have significant economic impact on a substantial number of small entities for the following reasons: This rule will only be enforced while unsafe conditions exist. Traffic will only be prohibited from passing through the zone when actual filming is being conducted. Traffic will only be stopped

for a short duration not to exceed twenty minutes during any one closure. In the event that the safety zone affects shipping, commercial vessels may request permission from the Captain of the Port, Sector North Carolina, or his or her on-scene representative to transit through the safety zone. The Coast Guard will give notice to the public via a Broadcast Notice to Marines that the regulation is in effect.

3. Assistance for Small Entities

Under section 213(a) of the Small Business Regulatory Enforcement Fairness Act of 1996 (Pub. L. 104–121), we want to assist small entities in understanding this rule. If the rule would affect your small business, organization, or governmental jurisdiction and you have questions concerning its provisions or options for compliance, please contact the person listed in the **FOR FURTHER INFORMATION CONTACT**, above.

Small businesses may send comments on the actions of Federal employees who enforce, or otherwise determine compliance with, Federal regulations to the Small Business and Agriculture Regulatory Enforcement Ombudsman and the Regional Small Business Regulatory Fairness Boards. The Ombudsman evaluates these actions annually and rates each agency's responsiveness to small business. If you wish to comment on actions by employees of the Coast Guard, call 1–888–REG–FAIR (1–888–734–3247). The Coast Guard will not retaliate against small entities that question or complain about this rule or any policy or action of the Coast Guard.

4. Collection of Information

This rule will not call for a new collection of information under the Paperwork Reduction Act of 1995 (44 U.S.C. 3501–3520).

5. Federalism

A rule has implications for federalism under Executive Order 13132, Federalism, if it has a substantial direct effect on the States, on the relationship between the national government and the States, or on the distribution of power and responsibilities among the various levels of government. We have analyzed this rule under that Order and determined that this rule does not have implications for federalism.

6. Protest Activities

The Coast Guard respects the First Amendment rights of protesters. Protesters are asked to contact the person listed in the **FOR FURTHER INFORMATION CONTACT** section to coordinate protest activities so that your message can be received without jeopardizing the safety or security of people, places or vessels.

7. Unfunded Mandates Reform Act

The Unfunded Mandates Reform Act of 1995 (2 U.S.C. 1531–1538) requires Federal agencies to assess the effects of their discretionary regulatory actions. In particular, the Act addresses actions that may result in the expenditure by a State, local, or tribal government, in the aggregate, or by the private sector of $100,000,000 (adjusted for inflation) or more in any one year. Though this rule will not result in such an expenditure, we do discuss the effects of this rule elsewhere in this preamble.

8. Taking of Private Property

This rule will not cause a taking of private property or otherwise have taking implications under Executive Order 12630, Governmental Actions and Interference with Constitutionally Protected Property Rights.

9. Civil Justice Reform

This rule meets applicable standards in sections 3(a) and 3(b)(2) of Executive Order 12988, Civil Justice Reform, to minimize litigation, eliminate ambiguity, and reduce burden.

10. Protection of Children

We have analyzed this rule under Executive Order 13045, Protection of Children from Environmental Health Risks and Safety Risks. This rule is not an economically significant rule and does not create an environmental risk to health or risk to safety that may disproportionately affect children.

11. Indian Tribal Governments

This rule does not have tribal implications under Executive Order 13175, Consultation and Coordination with Indian Tribal Governments, because it does not have a substantial direct effect on one or more Indian tribes, on the relationship between the Federal Government and Indian tribes, or on the distribution of power and responsibilities between the Federal Government and Indian tribes.

12. Energy Effects

This action is not a ''significant energy action'' under Executive Order 13211, Actions Concerning Regulations That Significantly Affect Energy Supply, Distribution, or Use.

13. Technical Standards

This rule does not use technical standards. Therefore, we did not consider the use of voluntary consensus standards.

14. Environment

We have analyzed this rule under Department of Homeland Security Management Directive 023–01 and Commandant Instruction M16475.lD, which guide the Coast Guard in complying with the National Environmental Policy Act of 1969 (NEPA) (42 U.S.C. 4321–4370f), and have determined that this action is one of a category of actions that do not individually or cumulatively have a significant effect on the human environment. This rule involves the establishment of safety zones. This rule is categorically excluded from further review under paragraph 34(g) of Figure 2–1 of the Commandant Instruction. An environmental analysis checklist supporting this determination and a Categorical Exclusion Determination are available in the docket where indicated under **ADDRESSES**. We seek any comments or information that may lead to the discovery of a significant environmental impact from this rule.

List of Subjects in 33 CFR Part 165

Harbors, Marine safety, Navigation (water), Reporting and recordkeeping requirements, Security measures, and Waterways.

For the reasons discussed in the preamble, the Coast Guard amends 33 CFR part 165 as follows:

PART 165—REGULATED NAVIGATION AREAS AND LIMITED ACCESS AREAS

■ 1. The authority citation for part 165 continues to read as follows:

Authority: 33 U.S.C. 1231; 46 U.S.C. Chapter 701, 3306, 3703; 50 U.S.C. 191, 195; 33 CFR 1.05–1, 6.04–1, 6.04–6, 160.5; Pub. L. 107–295, 116 Stat. 2064; Department of Homeland Security Delegation No. 0170.1.

■ 2. Add § 165.T05–0515 to read as follows:

§ 165.T05–0515 Safety Zone; Major Motion Picture Filming, Cape Fear River, Wilmington, NC.

(a) *Definitions.* For the purposes of this section, *Captain of the Port* means the Commander, Sector North Carolina. *Representative* means any Coast Guard commissioned, warrant, or petty officer who has been authorized to act on the behalf of the Captain of the Port.

(b) *Location.* The following area is a safety zone: This safety zone will encompass all waters on the Cape Fear River from latitude 34°11′14″ North, longitude 077°57′26″ West to latitude 34°12′42″ North, longitude 077°57′24″ West. All geographic coordinates are North American Datum 1983 (NAD 83).

(c) *Regulations.* (1) The general regulations contained in § 165.23 of this

part apply to the area described in paragraph (b) of this section.

(2) Persons or vessels requiring entry into or passage through any portion of the safety zone must first request authorization from the Captain of the Port, or a designated representative, unless the Captain of the Port previously announced via Marine Safety Radio Broadcast on VHF Marine Band Radio channel 22 (157.1 MHz) that this regulation will not be enforced in that portion of the safety zone. The Captain of the Port can be contacted at telephone number (910) 343–3882 or by radio on VHF Marine Band Radio, channels 13 and 16.

(d) *Enforcement.* The U.S. Coast Guard may be assisted in the patrol and enforcement of the zone by Federal, State, and local agencies.

(e) *Enforcement period.* This section will be enforced from 7:30 p.m. to 7 a.m. from August 2, 2012 until August 24, 2012 unless cancelled earlier by the Captain of the Port.

Dated: June 11, 2012.

A. Popiel,

Captain, U.S. Coast Guard, Captain of the Port North Carolina.

[FR Doc. 2012–15113 Filed 6–20–12; 8:45 am]

BILLING CODE 9110–04–P

DEPARTMENT OF HOMELAND SECURITY

Coast Guard

33 CFR Part 165

[Docket No. USCG–2012–0533]

RIN 1625–AA00

Safety Zone; Grand Hotel 125th Anniversary Fireworks Celebration, Mackinaw Island, MI

AGENCY: Coast Guard, DHS.

ACTION: Temporary final rule.

SUMMARY: The Coast Guard is establishing a temporary safety zone near Mackinaw Island, Michigan. This safety zone is intended to restrict vessels from a portion of Lake Huron due to a fireworks display. This temporary safety zone is necessary to protect the surrounding public and vessels from the hazards associated with a fireworks display.

DATES: This rule is effective from 10:00 p.m. until 11:30 p.m. on July 13, 2012.

ADDRESSES: Documents mentioned in this preamble are part of docket [USCG–2012–0533]. To view documents in this preamble as being available in the docket, go to *http://www.regulations.gov,* type the docket number in the ''SEARCH'' box, and click ''Search.'' You may visit the Docket Management Facility, Department of Transportation, West Building Ground Floor, Room W12–140, 1200 New Jersey Avenue SE., Washington, DC 20590, between 9 a.m. and 5 p.m., Monday through Friday, except Federal holidays.

FOR FURTHER INFORMATION CONTACT: If you have questions on this temporary rule, call or email MST3 Kevin Moe, U.S. Coast Guard, Sector Sault Sainte Marie, telephone 906–253–2429, email at *Kevin.D.Moe@uscg.mil.* If you have questions on viewing the docket, call Renee V. Wright, Program Manager, Docket Operations, telephone 202–366–9826.

SUPPLEMENTARY INFORMATION:

Table of Acronyms

DHS Department of Homeland Security
FR **Federal Register**
NPRM Notice of Proposed Rulemaking

A. Regulatory History and Information

The Coast Guard is issuing this temporary final rule without prior notice and opportunity to comment pursuant to authority under section 4(a) of the Administrative Procedure Act (APA) (5 U.S.C. 553(b)). This provision authorizes an agency to issue a rule without prior notice and opportunity to comment when the agency for good cause finds that those procedures are ''impracticable, unnecessary, or contrary to the public interest.'' Under 5 U.S.C. 553(b)(B), the Coast Guard finds that good cause exists for not publishing a notice of proposed rulemaking (NPRM) with respect to this rule because doing so would be impracticable. The final details for this event were not received by the Coast Guard with sufficient time for a comment and period to run before the start of the event. Thus, delaying this rule to wait for a notice and comment period to run would be impracticable because it would inhibit the Coast Guard's ability to protect the public from the hazards associated with maritime fireworks displays.

Under 5 U.S.C. 553(d)(3), the Coast Guard finds that good cause exists for making this rule effective less than 30 days after publication in the **Federal Register**. For the same reasons discussed in the preceding paragraph, waiting for a 30 day notice period to run would be impracticable.

B. Basis and Purpose

On the evening of July 13, 2012, fireworks will be launched from a point on Lake Huron to commemorate the Grand Hotel's 125th anniversary. The Captain of the Port, Sector Sault Sainte Marie, has determined that the Grand Hotel Celebration Fireworks Display will pose significant risks to the public. The likely congested waterways in the vicinity of a fireworks display could easily result in serious injuries or fatalities.

C. Discussion of Rule

To mitigate the risks associated with the Grand Hotel 125th Anniversary Fireworks Celebration, the Captain of the Port, Sector Sault Sainte Marie will enforce a temporary safety zone in the vicinity of the launch site. This safety zone will encompass all waters of Lake Huron approximately 1,000 yards west of Round Island Passage Light, within the arc of a circle with a 500ft radius from the fireworks launch site located on a barge positioned 45°50′34.92″ N, 085°37′38.16″ W [DATUM: NAD 83]. The safety zone will be effective and enforced from 10:00 p.m. until 11:30 p.m. on July 13, 2012.

Entry into, transiting, or anchoring within the safety zone is prohibited unless authorized by the Captain of the Port, Sector Sault Sainte Marie, or his or her on-scene representative. The Captain of the Port, Sector Sault Sainte Marie, or his or her on-scene representative may be contacted via VHF channel 16.

D. Regulatory Analyses

We developed this rule after considering numerous statutes and executive orders related to rulemaking. Below we summarize our analyses based on 13 of these statutes or executive orders.

1. Regulatory Planning and Review

This rule is not a significant regulatory action under section 3(f) of Executive Order 12866, Regulatory Planning and Review, as supplemented by Executive Order 13563, Improving Regulation and Regulatory Review, and does not require an assessment of potential costs and benefits under section 6(a)(3) of that Order or under section 1 of Executive Order 13563. The Office of Management and Budget has not reviewed it under these Orders. It is not ''significant'' under the regulatory policies and procedures of the Department of Homeland Security (DHS). We conclude that this rule is not a significant regulatory action because we anticipate that it will have minimal impact on the economy, will not interfere with other agencies, will not adversely alter the budget of any grant or loan recipients, and will not raise any novel legal or policy issues. The safety zone will be relatively small and will exist for only a minimal time. Under

certain conditions, moreover, vessels may still transit through the safety zone when permitted by proper authority.

2. Impact on Small Entities

The Regulatory Flexibility Act of 1980 (RFA), 5 U.S.C. 601–612, as amended, requires federal agencies to consider the potential impact of regulations on small entities during rulemaking. The Coast Guard certifies under 5 U.S.C. 605(b) that this rule will not have a significant economic impact on a substantial number of small entities. The Coast Guard certifies under 5 U.S.C. 605(b) that this rule will not have a significant economic impact on a substantial number of small entities.

This rule will affect the following entities, some of which might be small entities: The owners or operators of vessels intending to transit or anchor in a portion of Lake Huron between 10:00 p.m. and 11:30 p.m. on July 13, 2012.

This safety zone will not have significant economic impact on a substantial number of small entities for the following reasons: this rule will only be enforced for a short period of time. Vessels may safely pass outside the safety zone during the event. In the event that this temporary safety zone affects shipping, commercial vessels may request permission from the Captain of the Port, Sector Sault Sainte Marie, to transit through the safety zone. The Coast Guard will give notice to the public via a Broadcast to Mariners that the regulation is in effect.

3. Assistance for Small Entities

Under section 213(a) of the Small Business Regulatory Enforcement Fairness Act of 1996 (Pub. L. 104–121), we want to assist small entities in understanding the rule. If the rule would affect your small business, organization, or governmental jurisdiction and you have questions concerning its provisions or options for compliance, please contact the person listed in the **FOR FURTHER INFORMATION CONTACT** section above.

Small businesses may send comments on the actions of Federal employees who enforce, or otherwise determine compliance with, Federal regulations to the Small Business and Agriculture Regulatory Enforcement Ombudsman and the Regional Small Business Regulatory Fairness Boards. The Ombudsman evaluates these actions annually and rates each agency's responsiveness to small business. If you wish to comment on actions by employees of the Coast Guard, call 1–888–REG–FAIR (1–888–734–3247). The Coast Guard will not retaliate against small entities that question or complain about this rule or any policy or action of the Coast Guard.

4. Collection of Information

This rule calls for no new collection of information under the Paperwork Reduction Act of 1995 (44 U.S.C. 3501–3520).

5. Federalism

A rule has implications for federalism under Executive Order 13132, Federalism, if it has a substantial direct effect on the States, on the relationship between the national government and the States, or on the distribution of power and responsibilities among the various levels of government. We have analyzed this rule under that Order and determined that this rule does not have implications for federalism.

6. Protest Activities

The Coast Guard respects the First Amendment rights of protesters. Protesters are asked to contact the person listed in the **FOR FURTHER INTFORMATION CONTACT** section to coordinate protest activities so that your message can be received without jeopardizing the safety or security of people, places or vessels.

7. Unfunded Mandates Reform Act

The Unfunded Mandates Reform Act of 1995 (2 U.S.C. 1531–1538) requires Federal agencies to assess the effects of their discretionary regulatory actions. In particular, the Act addresses actions that may result in the expenditure by a State, local, or tribal government, in the aggregate, or by the private sector of $100,000,000 (adjusted for inflation) or more in any one year. Though this rule will not result in such an expenditure, we do discuss the effects of this rule elsewhere in this preamble.

8. Taking of Private Property

This rule will not cause a taking of private property or otherwise have taking implications under Executive Order 12630, Governmental Actions and Interference with Constitutionally Protected Property Rights.

9. Civil Justice Reform

This rule meets applicable standards in sections 3(a) and 3(b)(2) of Executive Order 12988, Civil Justice Reform, to minimize litigation, eliminate ambiguity, and reduce burden.

10. Protection of Children

We have analyzed this rule under Executive Order 13045, Protection of Children from Environmental Health Risks and Safety Risks. This rule is not an economically significant rule and does not create an environmental risk to health or risk to safety that may disproportionately affect children.

11. Indian Tribal Governments

This rule does not have tribal implications under Executive Order 13175, Consultation and Coordination with Indian Tribal Governments, because it does not have a substantial direct effect on one or more Indian tribes, on the relationship between the Federal Government and Indian Tribes, or on the distribution of power and responsibilities between the Federal Government and Indian tribes.

12. Energy Effects

This action is not a ''significant energy action'' under Executive Order 13211, Actions Concerning Regulations That Significantly Affect Energy Supply, Distribution, or Use.

13. Technical Standards

The National Technology Transfer and Advancement Act (NTTAA) (15 U.S.C. 272 note) directs agencies to use voluntary consensus standards in their regulatory activities unless the agency provides Congress, through the Office of Management and Budget, with an explanation of why using these standards would be inconsistent with applicable law or otherwise impractical. Voluntary consensus standards are technical standards (e.g., specifications of materials, performance, design, or operation; test methods; sampling procedures; and related management systems practices) that are developed or adopted by voluntary consensus standards bodies.

This rule does not use technical standards. Therefore, we did not consider the use of voluntary consensus standards.

14. Environment

We have analyzed this rule under Department of Homeland Security Management Directive 023–01 and Commandant Instruction M16475.lD, which guide the Coast Guard in complying with the National Environmental Policy Act of 1969 (NEPA) (42 U.S.C. 4321–4370f), and have concluded this action is one of a category of actions that do not individually or cumulatively have a significant effect on the human environment. This rule is categorically excluded, under figure 2–1, paragraph (34)(g), of the Instruction because it involves the establishment of a safety zone. A final environmental analysis checklist and a categorical exclusion determination are available in the docket where indicated under

ADDRESSES. We seek any comments or information that may lead to the discovery of a significant environmental impact from this rule.

List of Subjects in 33 CFR Part 165

Harbors, Marine safety, Navigation (water), Reporting and recordkeeping requirements, Security measures, Waterways.

For the reasons discussed in the preamble, the Coast Guard amends 33 CFR part 165 as follows:

PART 165—REGULATED NAVIGATION AREAS AND LIMITED ACCESS AREAS

■ 1. The authority citation for part 165 continues to read as follows:

Authority: 33 U.S.C. 1231; 46 U.S.C. Chapter 701, 3306, 3703; 50 U.S.C. 191; 33 CFR 1.05–1, 6.04–1, 6.04–6, and 160.5; Pub. L 107–295, 116 Stat. 2064; Department of Homeland Security Delegation No. 0170.1.

■ 2. Add § 165.T09–0533 to read as follows:

§ 165.T09–0533 Safety Zone; Grand Hotel 125th Anniversary Fireworks Celebration, Mackinaw Island, Michigan.

(a) *Location.* This safety zone will encompass all waters of Lake Huron approximately 1000 yards west of Round Island Passage Light, within the arc of a circle with a 500ft radius from the fireworks launch site located on a barge positioned at 45°50′34.92″ N, 085°37′38.16″ W [DATUM: NAD 83].

(b) *Effective and enforcement period.* This rule is effective and will be enforced from 10:00 p.m. until 11:30 p.m. on July 13, 2012.

(c) *Regulations.* (1) In accordance with the general regulations in section 165.23 of this part, entry into, transiting, or anchoring within this safety zone is prohibited unless authorized by the Captain of the Port, Sector Sault Sainte Marie, or his or her on-scene representative.

(2) This safety zone is closed to all vessel traffic, except as may be permitted by the Captain of the Port, Sector Sault Sainte Marie, or his or her on-scene representative.

(3) The ''on-scene representative'' of the Captain of the Port, Sector Sault Sainte Marie, is any Coast Guard commissioned, warrant or petty officer who has been designated by the Captain of the Port, Sector Sault Sainte Marie, to act on his or her behalf. The on-scene representative of the Captain of the Port, Sector Sault Sainte Marie, will be aboard either a Coast Guard or Coast Guard Auxiliary vessel.

(4) Vessel operators desiring to enter the safety zone or operate within the safety zone shall contact the Captain of the Port, Sector Sault Sainte Marie, or his or her on-scene representative to obtain permission to do so. The Captain of the Port, Sector Sault Sainte Marie, or his or her on-scene representative may be contacted via VHF Channel 16. Vessel operators given permission to enter or operate in the safety zone must comply with all directions given to them by the Captain of the Port, Sector Sault Sainte Marie, or his or her on-scene representative.

Dated: June 11, 2012.

S.B. Lowe,

Captain, U.S. Coast Guard, Acting Captain of the Port Sault Sainte Marie.

[FR Doc. 2012–15115 Filed 6–20–12; 8:45 am]

BILLING CODE 9110–04–P

ENVIRONMENTAL PROTECTION AGENCY

40 CFR Part 52

[EPA–R05–OAR–2012–0214; FRL–9689–6]

Approval and Promulgation of Air Quality Implementation Plans; Indiana; Central Indiana (Indianapolis) Ozone Maintenance Plan Revision to Approved Motor Vehicle Emissions Budgets

AGENCY: Environmental Protection Agency (EPA).

ACTION: Final rule.

SUMMARY: EPA is approving Indiana's request to revise its Central Indiana 1997 8-hour ozone maintenance air quality State Implementation Plan (SIP) by replacing the previously approved motor vehicle emissions budgets (budgets) with budgets developed using EPA's Motor Vehicle Emissions Simulator (MOVES) emissions model. The Central Indiana 1997 8-hour ozone maintenance area consists of Marion, Boone, Hendricks, Morgan, Johnson, Shelby, Hancock, Madison, and Hamilton Counties in Indiana.

DATES: This final rule is effective on July 23, 2012.

ADDRESSES: EPA has established a docket for this action under Docket ID No. EPA–R05–OAR–2012–0214. All documents in the docket are listed on the *www.regulations.gov* Web site. Although listed in the index, some information is not publicly available, i.e., Confidential Business Information (CBI) or other information whose disclosure is restricted by statute. Certain other material, such as copyrighted material, is not placed on the Internet and will be publicly available only in hard copy form. Publicly available docket materials are available either electronically through *www.regulations.gov* or in hard copy at the Environmental Protection Agency, Region 5, Air and Radiation Division, 77 West Jackson Boulevard, Chicago, Illinois 60604. This facility is open from 8:30 a.m. to 4:30 p.m., Monday through Friday, excluding Federal holidays. We recommend that you telephone Patricia Morris, Environmental Scientist at (312) 353–8656 before visiting the Region 5 office.

FOR FURTHER INFORMATION CONTACT: Patricia Morris, Environmental Scientist, Control Strategies Section, Air Programs Branch (AR–18J), Environmental Protection Agency, Region 5, 77 West Jackson Boulevard, Chicago, Illinois 60604, (312) 353–8656, *morris.patricia@epa.gov*.

SUPPLEMENTARY INFORMATION: Throughout this document whenever ''we,'' ''us,'' or ''our'' is used, we mean EPA. This supplementary information section is arranged as follows:

I. What is the background for this action?
II. What public comments were received?
III. What action is EPA taking?
IV. Statutory and Executive Order Reviews

I. What is the background for this action?

On March 2, 2012, Indiana submitted for parallel processing replacement budgets based on MOVES2010a for the Central Indiana area. On April 5, 2012, EPA proposed approval in the **Federal Register** of the Indiana SIP submittal (77 FR 20577). The primary background for today's action is contained in EPA's April 5, 2012, proposal. The SIP revision replaces MOBILE6.2 based approved budgets in the 1997 8-hour ozone maintenance plan for Central Indiana with MOVES2010a based budgets.

Indiana submitted the final SIP revision request on April 16, 2012. The April 16, 2012, submittal letter with the state public comment documentation completed the requirements for the SIP submittal.

The MOVES model is EPA's state-of-the-art tool for estimating highway emissions. The model is based on analyses of millions of emission test results and considerable advances in EPA understanding of vehicle emissions. MOVES incorporates the latest emissions data, more sophisticated calculation algorithms, increased user flexibility, new software design, and significant new capabilities relative to those reflected in MOBILE6.2.

States that revise their existing SIPs to include MOVES budgets must show that the SIP continues to meet applicable

requirements with the new level of motor vehicle emissions contained in the budgets. The transportation conformity rule (40 CFR 93.118(e)(4)(iv)) requires that ''the motor vehicle emissions budgets(s), when considered together with all other emissions sources, is consistent with applicable requirements for reasonable further progress, attainment, or maintenance (whichever is relevant to the given implementation plan submission).''

EPA has determined, based on its evaluation, that the area's maintenance plan continues to serve its intended purpose with the MOVES2010a-based budgets and that the budgets themselves meet the adequacy criteria in the conformity rule at 40 CFR 93.118(e)(4). The basis for this conclusion is contained in the proposed approval (77 FR 20577) and is also based on the final submittal and completion of the public comment period. The final submittal letter and public comment documentation completed the items needed for adequacy.

The Central Indiana area has three Metropolitan Planning Organizations (MPOs) in the maintenance area (Indianapolis, Anderson and a portion of the Columbus, Indiana MPO). These three MPOs are required by the conformity rule to conduct conformity determinations together because they are all part of the same maintenance area with one set of ozone budgets for that area (there are not separate budgets for each MPO). The budgets are being updated, not only to accommodate the use of MOVES2010a, but also because of the updated planning assumptions for mobile sources. The April 16, 2012, submittal letter with the public comment documentation completed the requirements for the SIP submittal.

Once EPA approves the submitted budgets, they must be used by local, state and Federal agencies in determining whether transportation activities conform to the SIP as required by section 176(c) of the Clean Air Act (CAA).

II. What public comments were received?

The State public comment period was from March 1, 2012, until March 30, 2012. A public hearing was offered but was not requested. No public comments were received by Indiana during the comment period.

The **Federal Register** proposing approval was published on April 5, 2012, and the public comment period closed on May 7, 2012.

No comments were received during the public comment period.

III. What action is EPA taking?

EPA is approving new MOVES2010a-based budgets for the Central Indiana 1997 ozone maintenance area because the submitted budgets will continue to keep emissions below the attainment level and maintain air quality. On the effective date of this rulemaking, the submitted MOVES2010a budgets will replace the existing, MOBILE6.2-based budgets in the state's 1997 8-hour ozone maintenance plan and will be used in future transportation conformity analyses for the area. The previously approved MOBILE6.2 budgets will no longer be applicable for transportation conformity purposes.

MOTOR VEHICLE EMISSION BUDGETS FOR 8-HOUR OZONE FOR CENTRAL INDIANA

Year	2006	2020
NO_X tons/day	210.93	69.00
VOC tons/day	64.32	25.47

IV. Statutory and Executive Order Reviews

Under the Clean Air Act, the Administrator is required to approve a SIP submission that complies with the provisions of the CAA and applicable Federal regulations. 42 U.S.C. 7410(k); 40 CFR 52.02(a). Thus, in reviewing SIP submissions, EPA's role is to approve state choices, provided that they meet the criteria of the CAA. Accordingly, this action merely approves state law as meeting Federal requirements and does not impose additional requirements beyond those imposed by state law. For that reason, this action:

- Is not a ''significant regulatory action'' subject to review by the Office of Management and Budget under Executive Order 12866 (58 FR 51735, October 4, 1993);
- Does not impose an information collection burden under the provisions of the Paperwork Reduction Act (44 U.S.C. 3501 *et seq.*);
- Is certified as not having a significant economic impact on a substantial number of small entities under the Regulatory Flexibility Act (5 U.S.C. 601 *et seq.*);
- Does not contain any unfunded mandate or significantly or uniquely affect small governments, as described in the Unfunded Mandates Reform Act of 1995 (Pub. L. 104–4);
- Does not have Federalism implications as specified in Executive Order 13132 (64 FR 43255, August 10, 1999);
- Is not an economically significant regulatory action based on health or safety risks subject to Executive Order 13045 (62 FR 19885, April 23, 1997);
- Is not a significant regulatory action subject to Executive Order 13211 (66 FR 28355, May 22, 2001);
- Is not subject to requirements of Section 12(d) of the National Technology Transfer and Advancement Act of 1995 (15 U.S.C. 272 note) because application of those requirements would be inconsistent with the Clean Air Act; and
- Does not provide EPA with the discretionary authority to address, as appropriate, disproportionate human health or environmental effects, using practicable and legally permissible methods, under Executive Order 12898 (59 FR 7629, February 16, 1994).

In addition, this rule does not have tribal implications as specified by Executive Order 13175 (65 FR 67249, November 9, 2000), because the SIP is not approved to apply in Indian country located in the state, and EPA notes that it will not impose substantial direct costs on tribal governments or preempt tribal law.

The Congressional Review Act, 5 U.S.C. 801 et seq., as added by the Small Business Regulatory Enforcement Fairness Act of 1996, generally provides that before a rule may take effect, the agency promulgating the rule must submit a rule report, which includes a copy of the rule, to each House of the Congress and to the Comptroller General of the United States. EPA will submit a report containing this action and other required information to the U.S. Senate, the U.S. House of Representatives, and the Comptroller General of the United States prior to publication of the rule in the **Federal Register**. A major rule cannot take effect until 60 days after it is published in the **Federal Register**. This action is not a ''major rule'' as defined by 5 U.S.C. 804(2).

Under section 307(b)(1) of the CAA, petitions for judicial review of this action must be filed in the United States Court of Appeals for the appropriate circuit by August 20, 2012. Filing a petition for reconsideration by the Administrator of this final rule does not affect the finality of this action for the purposes of judicial review nor does it extend the time within which a petition for judicial review may be filed, and shall not postpone the effectiveness of such rule or action. This action may not be challenged later in proceedings to enforce its requirements. (See section 307(b)(2).)

List of Subjects in 40 CFR Part 52

Environmental protection, Air pollution control, Incorporation by reference, Intergovernmental relations,

Nitrogen dioxides, Ozone, Volatile organic compounds.

Dated: June 11, 2012.

Susan Hedman,

Regional Administrator, Region 5.

40 CFR part 52 is amended as follows:

PART 52—[AMENDED]

■ 1. The authority citation for part 52 continues to read as follows:

Authority: 42 U.S.C. 7401 *et seq.*

Subpart P—Indiana

■ 2. Section 52.777(jj) is amended by redesignating the existing paragraph as paragraph (jj)(1) and by adding new paragraph (jj)(2) to read as follows:

§ 52.777 Control Strategy: photochemical oxidants (hydrocarbons).

* * * * *

(jj) * * *

(2) Approval—On April 16, 2012, Indiana submitted a request to revise the approved MOBILE6.2 motor vehicle emission budgets (budgets) in the 1997 8-hour ozone maintenance plan for the Central Indiana area. The budgets are being revised with budgets developed with the MOVES2010a model. The 2006 budgets for Central Indiana are 64.32 tons per day volatile organic compounds (VOCs) and 210.93 tons per day nitrogen oxides (NO_X) and 2020 budgets are 25.47 tons per day VOCs and 69.00 tons per day of NO_X.

* * * * *

[FR Doc. 2012–14949 Filed 6–20–12; 8:45 am]

BILLING CODE 6560–50–P

DEPARTMENT OF COMMERCE

National Oceanic and Atmospheric Administration

50 CFR Part 622

[Docket No. 120417412–2412–01]

RIN 0648–XCO76

Reef Fish Fishery of the Gulf of Mexico; 2012 Commercial Accountability Measure and Closure for Gulf of Mexico Gray Triggerfish

AGENCY: National Marine Fisheries Service (NMFS), National Oceanic and Atmospheric Administration (NOAA), Commerce.

ACTION: Temporary rule; closure.

SUMMARY: NMFS implements accountability measures (AMs) for the commercial sector of gray triggerfish in the Gulf of Mexico (Gulf) for the 2012 fishing year through this final temporary rule. Based on the projected commercial landings estimates, NMFS determined that the commercial annual catch target (ACT) for Gulf gray triggerfish will be met by July 1, 2012. Therefore, NMFS closes the commercial sector for gray triggerfish on July 1, 2012, through the remainder of the fishing year in the Gulf exclusive economic zone (EEZ). This action is necessary to reduce overfishing of the Gulf gray triggerfish resource.

DATES: This rule is effective 12:01 a.m., local time on July 1, 2012, until 12:01 a.m., local time on January 1, 2013.

ADDRESSES: Electronic copies of documents supporting the final temporary rule implementing gray triggerfish management measures (77 FR 28308, May 14, 2012), which include a draft environmental impact statement and a regulatory flexibility analysis, may be obtained from the Southeast Regional Office Web site at *http://sero.nmfs.noaa.gov.*

FOR FURTHER INFORMATION CONTACT: Peter Hood, telephone: 727–824–5305 or email: *Peter.Hood@noaa.gov.*

SUPPLEMENTARY INFORMATION: The reef fish fishery of the Gulf is managed under the Fishery Management Plan for the Reef Fish Resources of the Gulf of Mexico (FMP). The FMP was prepared by the Gulf of Mexico Fishery Management Council (Council) and is implemented through regulations at 50 CFR part 622 under the authority of the Magnuson-Stevens Fishery Conservation and Management Act (Magnuson-Stevens Act).

Background

The Magnuson-Stevens Act requires NMFS and regional fishery management councils to prevent overfishing and achieve, on a continuing basis, the optimum yield from federally managed fish stocks. These mandates are intended to ensure that fishery resources are managed for the greatest overall benefit to the nation, particularly with respect to providing food production and recreational opportunities, and protecting marine ecosystems. To further this goal, the Magnuson-Stevens Act requires fishery managers to end overfishing of stocks and to minimize bycatch and bycatch mortality to the extent practicable. To accomplish this, the Magnuson-Stevens Act implemented new requirements that annual catch limits (ACLs) and AMs be established to end overfishing and prevent overfishing from occurring. AMs are management controls to prevent ACLs from being exceeded, and to correct or mitigate overages of the ACL if they occur. One of the AMs established for gray triggerfish is an ACT (quota) that is less than the ACL. The ACT is intended to address management associated with monitoring landings of the reduced quota. The ACT is intended to better ensure the ACL is not exceeded.

In 2011, a Southeast Data, Assessment, and Review (SEDAR) update stock assessment for gray triggerfish determined that the gray triggerfish stock was still overfished and was additionally undergoing overfishing. At the request of the Council, on May 14, 2012, NMFS published a final temporary rule to reduce overfishing of gray triggerfish on an interim basis (77 FR 28308) while the Council developed more permanent measures to end overfishing and rebuild the gray triggerfish stock in Amendment 37 to the FMP. The final temporary rule set the commercial ACT (commercial quota) at 60,900 lb (27,624 kg), round weight.

The regulations at 50 CFR 622.49(a)(17)(i), contain both in-season and post-season AMs. The in-season AM closes the commercial sector after the commercial ACT (commercial quota) is reached or projected to be reached. Based on the most recent information available through the quota monitoring system of the Southeast Fisheries Science Center, the 2012 commercial ACT for Gulf gray triggerfish will be met by July 1, 2012. Therefore, NMFS implements the in-season AM and closes the commercial sector for Gulf gray triggerfish at 12:01 a.m., local time, July 1, 2012. The commercial sector will remain closed through December 31, 2012. This closure is intended to reduce overfishing of Gulf gray triggerfish and increase the likelihood that the 2012 ACL will not be exceeded.

On June 4, 2012, NMFS published a notice in the **Federal Register** to close the recreational sector for Gulf gray triggerfish on June 11, 2012, and it will remain closed through December 31, 2012 (77 FR 32913). Therefore, beginning 12:01 a.m., local time on July 1, 2012, until 12:01 a.m., local time on January 1, 2013, all harvest, possession, sale, or purchase of gray triggerfish in or from the Gulf EEZ is prohibited. The prohibition on sale or purchase does not apply to sale or purchase of gray triggerfish that were harvested, landed ashore, and sold prior to 12:01 a.m., local time, July 1, 2012, and were held in cold storage by a dealer or processor.

The commercial sector for gray triggerfish will reopen on January 1, 2013, the beginning of the 2013 commercial fishing season. The 2013 commercial quota for gray triggerfish will be the quota specified at 50 CFR 622.42(a)(1)(vii) unless a reduced quota

is specified through notification in the **Federal Register**, or subsequent regulatory action is taken to adjust the quota.

Classification

This action responds to the best scientific information available. The Regional Administrator, Southeast Region, NMFS, has determined this temporary rule is necessary for the conservation and management of Gulf gray triggerfish and is consistent with the Magnuson-Stevens Act and other applicable laws.

This action is taken under 50 CFR 622.49(a)(17)(i) and is exempt from review under Executive Order 12866.

These measures are exempt from the procedures of the Regulatory Flexibility Act because the temporary rule is issued without opportunity for prior notice and comment.

Pursuant to 5 U.S.C. 553(b)(B), there is good cause to waive the requirements to provide prior notice and opportunity for public comment on this temporary rule. As specified in 50 CFR 622.49(a)(17)(i), the AMs state that NMFS will file a notification with the Office of the Federal Register to close the commercial sector after the commercial quota (commercial ACT) is reached or projected to be reached. All that remains is to notify the public of the closure of Gulf gray triggerfish for the remainder of the 2012 fishing year. Additionally, there is a need to immediately implement the closure of gray triggerfish for the 2012 fishing year, to prevent further commercial harvest and prevent the ACL from being exceeded, which will protect the gray triggerfish resource in the Gulf. Also, providing prior notice and opportunity for public comment on this action would be contrary to the public interest because many of those affected by the closure need as much time as possible to adjust business plans to account for the reduced commercial fishing season.

For the aforementioned reasons, the Assistant Administrator, NMFS, also finds good cause to waive the 30-day delay in the effectiveness of this action under 5 U.S.C. 553(d)(3).

Authority: 16 U.S.C. 1801 *et seq.*

Dated: June 18, 2012.

Carrie Selberg,

Acting Director, Office of Sustainable Fisheries, National Marine Fisheries Service.

[FR Doc. 2012–15211 Filed 6–18–12; 4:15 pm]

BILLING CODE 3510–22–P

Proposed Rules

Federal Register
Vol. 77, No. 120
Thursday, June 21, 2012

This section of the FEDERAL REGISTER contains notices to the public of the proposed issuance of rules and regulations. The purpose of these notices is to give interested persons an opportunity to participate in the rule making prior to the adoption of the final rules.

DEPARTMENT OF TRANSPORTATION

Federal Aviation Administration

14 CFR Part 39

[Docket No. FAA–2011–0724; Directorate Identifier 2010–NM–181–AD]

RIN 2120–AA64

Airworthiness Directives; The Boeing Company Airplanes

AGENCY: Federal Aviation Administration (FAA), DOT.

ACTION: Supplemental notice of proposed rulemaking (NPRM); reopening of comment period.

SUMMARY: We are revising an earlier proposed airworthiness directive (AD) for certain The Boeing Company Model 757–200, –200PF, and –200CB series airplanes powered by Rolls-Royce engines. That NPRM proposed to supersede an existing AD that requires repetitive inspections of the shim installation between the drag brace fitting vertical flange and bulkhead, and repair if necessary; for certain airplanes, an inspection for cracking of the four critical fastener holes in the horizontal flange, and repair if necessary; and, for airplanes without conclusive records of previous inspections, performing the existing actions. That NPRM proposed to reduce the repetitive inspection interval, add repetitive detailed inspections for cracking of the bulkhead, and repair if necessary; extend the repetitive intervals for certain airplanes by also doing repetitive ultrasonic inspections for cracking of the bulkhead, and repair if necessary; and an option for the high frequency eddy current inspection for cracking of the critical fastener holes, and repair if necessary. That NPRM was prompted by reports of loose fasteners and cracks at the joint common to the aft torque bulkhead and strut-to-diagonal brace fitting, and one report of such damage occurring less than 3,000 flight cycles after the last inspection. This action revises that NPRM by adding a terminating action for certain repetitive inspections. We are proposing the supplemental NPRM to detect and correct cracks, loose and broken bolts, and shim migration in the joint between the aft torque bulkhead and the strut-to-diagonal brace fitting, which could result in damage to the strut and consequent separation of the strut and engine from the airplane. Since these actions impose an additional burden over that proposed in the NPRM, we are reopening the comment period to allow the public the chance to comment on these proposed changes.

DATES: We must receive comments on the supplemental NPRM by August 6, 2012.

ADDRESSES: You may send comments, using the procedures found in 14 CFR 11.43 and 11.45, by any of the following methods:

- *Federal eRulemaking Portal:* Go to *http://www.regulations.gov.* Follow the instructions for submitting comments.
- *Fax:* 202–493–2251.
- *Mail:* U.S. Department of Transportation, Docket Operations, M–30, West Building Ground Floor, Room W12–140, 1200 New Jersey Avenue SE., Washington, DC 20590.
- *Hand Delivery:* U.S. Department of Transportation, Docket Operations, M–30, West Building Ground Floor, Room W12–140, 1200 New Jersey Avenue SE., Washington, DC 20590, between 9 a.m. and 5 p.m., Monday through Friday, except Federal holidays.

For service information identified in this proposed AD, contact Boeing Commercial Airplanes, Attention: Data & Services Management, P.O. Box 3707, MC 2H–65, Seattle, WA 98124–2207; phone: 206–544–5000, extension 1; fax: 206–766–5680; Internet: *https://www.myboeingfleet.com.* You may review copies of the referenced service information at the FAA, Transport Airplane Directorate, 1601 Lind Avenue SW., Renton, WA. For information on the availability of this material at the FAA, call 425–227–1221.

Examining the AD Docket

You may examine the AD docket on the Internet at *http://www.regulations.gov;* or in person at the Docket Management Facility between 9 a.m. and 5 p.m., Monday through Friday, except Federal holidays. The AD docket contains this proposed AD, the regulatory evaluation, any comments received, and other information. The street address for the Docket Office (phone: 800–647–5527) is in the **ADDRESSES** section. Comments will be available in the AD docket shortly after receipt.

FOR FURTHER INFORMATION CONTACT: Nancy Marsh, Aerospace Engineer, Airframe Branch, ANM–120S, Seattle Aircraft Certification Office (ACO), FAA, 1601 Lind Avenue SW., Renton, Washington 98057–3356; phone: 425–917–6440; fax: 425–917–6590; email: *Nancy.Marsh@faa.gov.*

SUPPLEMENTARY INFORMATION:

Comments Invited

We invite you to send any written relevant data, views, or arguments about this proposed AD. Send your comments to an address listed under the **ADDRESSES** section. Include ''Docket No. FAA–2011–0724; Directorate Identifier 2010–NM–181–AD'' at the beginning of your comments. We specifically invite comments on the overall regulatory, economic, environmental, and energy aspects of this proposed AD. We will consider all comments received by the closing date and may amend this proposed AD because of those comments.

We will post all comments we receive, without change, to *http://www.regulations.gov,* including any personal information you provide. We will also post a report summarizing each substantive verbal contact we receive about this proposed AD.

Discussion

We issued an NPRM to amend 14 CFR part 39 to supersede AD 2008–05–10, Amendment 39–15404 (73 FR 11347, March 3, 2008), to include an AD applies to certain The Boeing Company Model 757–200, –200PF, and –200CB series airplanes powered by Rolls-Royce engines. That NPRM was published in the **Federal Register** on August 24, 2011 (76 FR 52901). That NPRM proposed to continue to repetitive inspections of the shim installation between the drag brace fitting vertical flange and bulkhead, and repair if necessary; for certain airplanes, an inspection for cracking of the four critical fastener holes in the horizontal flange, and repair if necessary; and, for airplanes without conclusive records of previous inspections, performing the existing actions. Additionally, the existing AD requires that the existing

action be performed on airplanes without conclusive records of previous inspections. That NPRM proposed to reduce the repetitive inspection interval, and add repetitive detailed inspections for cracking of the bulkhead, and repair if necessary. That NPRM proposed an option, for certain airplanes, to extend the repetitive intervals by also doing repetitive ultrasonic inspections for cracking of the bulkhead, and repair if necessary; and proposed an option to the high frequency eddy current inspection for cracking of the critical fastener holes, and repair if necessary.

Actions Since Previous NPRM (76 FR 52901, August 24, 2011) Was Issued

Since we issued the previous NPRM (76 FR 52901, August 24, 2011), new service information has been issued that specifies additional actions that are necessary to address the identified unsafe condition, and also describes a terminating action for the repetitive inspections on certain airplanes.

Comments

We gave the public the opportunity to comment on the previous NPRM (76 FR 52901, August 24, 2011). The following presents the comments received on the NPRM and the FAA's response to each comment.

Agreement With the Previous NPRM (76 FR 52901, August 24, 2011)

Continental Airlines (Continental) stated it concurs in general with previous NPRM (76 FR 52901, August 24, 2011) to mandate Boeing Alert Service Bulletin 757–54A0047, Revision 4, dated June 24, 2010, inspections.

Request To Reference Revised Service Information

Continental, UPS, European Air Transport Leipzig GmbH (EATL), and FedEx requested that the previous NPRM (76 FR 52901, August 24, 2011) be changed to include Boeing Alert Service Bulletin 757–54A0047, Revision 5, dated June 9, 2011. The commenters stated this revised service information includes a terminating action for the repetitive inspections.

We agree because Boeing Alert Service Bulletin 757–54A0047, Revision 5, dated June 9, 2011, includes terminating action to address the unsafe condition. Boeing Alert Service Bulletin 757–54A0047, Revision 5, dated June 9, 2011, describes procedures for certain airplanes for replacing the horizontal and vertical flange fasteners in the strut-to-diagonal brace fitting on the number 1 and number 2 struts with new fasteners, and doing related investigative and corrective actions if necessary. The related investigative action is an eddy current inspection for cracking of the critical fastener holes in the horizontal and vertical flange. The corrective action is contacting Boeing for repair instructions and doing the repair. We have changed this supplemental NPRM to refer to Boeing Alert Service Bulletin 757–54A0047, Revision 5, dated June 9, 2011, and have made the terminating action specified in this service information mandatory. We have also added paragraph (p) in this supplemental NPRM to provide credit for actions accomplished before the effective date of the AD using Boeing Alert Service Bulletin 757–54A0047, Revision 4, dated June 24, 2010.

Request To Include Alternative Method of Compliance (AMOC) in Previous NPRM (76 FR 52901, August 24, 2011)

Continental requested a paragraph be added to the previous NPRM (76 FR 52901, August 24, 2011) that approves accomplishment of the terminating modification specified in Boeing Alert Service Bulletin 757–54A0047, Revision 5, dated June 9, 2011, as an AMOC with the actions specified in paragraphs (g), (h), (l), (q), and (r) of the previous NPRM. The commenter did not provide any justification for this request.

We disagree with adding an AMOC provision to the supplemental NPRM. As previously stated, we are changing the supplemental NPRM to mandate the terminating action specified in Boeing Alert Service Bulletin 757–54A0047, Revision 5, dated June 9, 2011, which would terminate the inspections specified in paragraphs (g), (h), (j), and (m) of the supplemental NPRM for Group 1, Configuration 2 airplanes; and Group 2 airplanes; as identified in Boeing Alert Service Bulletin 757–54A0047, Revision 5, dated June 9, 2011. These supplemental NPRM paragraphs are the same paragraphs specified by the commenter (paragraphs (j) and (m) of the supplemental NPRM correspond to paragraphs (l) and (q) in the previous NPRM (76 FR 52901, August 24, 2011)). The commenter also included paragraph (r) of the previous NPRM (which is paragraph (n) in the supplemental NPRM); however, that paragraph is not pertinent since it provides the compliance times for paragraph (m) in the supplemental NPRM. Termination of the inspections specified in paragraphs (g), (h), (j), and (m) of this supplemental NPRM, through accomplishment of the modification required by paragraph (o) of this supplemental NPRM, has the same result as the AMOC requested by the commenter, since use of Boeing Alert Service Bulletin 757–54A0047, Revision 5, dated June 9, 2011, is being proposed. We have not changed the supplemental NPRM in this regard.

Request To Add Actions Specified in Revised Service Information

Boeing proposed language for three new paragraphs to the previous NPRM (76 FR 52901, August 24, 2011), which correspond to paragraphs (s), (t), and (u) of the previous NPRM, that would require certain actions specified in Boeing Alert Service Bulletin 757–54A0047, Revision 5, dated June 9, 2011. The actions in Boeing's proposed paragraphs included installation of larger diameter fasteners, as specified in Boeing Alert Service Bulletin 757–54A0047, Revision 5, dated June 9, 2011, ''within 9,000 flight cycles or 54 months, whichever is earlier, after the effective date of the AD;'' crack repair instructions for cracking found during the fastener modification; and termination of inspections required in paragraphs (h), (l)(2), and (q) of the previous NPRM.

We partially agree. We agree to refer to Boeing Alert Service Bulletin 757–54A0047, Revision 5, dated June 9, 2011, because it provides additional actions and a modification to address the unsafe condition for certain airplanes. We disagree with adding the specific paragraphs proposed by Boeing because we are issuing a supplemental NPRM that proposes to mandate Boeing Alert Service Bulletin 757–54A0047, Revision 5, dated June 9, 2011. Therefore, the paragraphs proposed by Boeing that specify installing larger diameter fasteners and the compliance time are unnecessary. We have not changed the supplemental NPRM in this regard.

Boeing also proposed a paragraph that defines the terminating action for the repetitive inspections required by paragraphs (h), (l)(2), and (q) of the previous NPRM (76 FR 52901, August 24, 2011). Part of the commenter's proposed terminating action paragraph for Group 1, Configuration 1 airplanes; and Group 2 airplanes; is unnecessary. Boeing Alert Service Bulletin 757–54A0047, Revision 5, dated June 9, 2011, specified in the supplemental NPRM, already includes this information. Additionally, the commenter's proposed terminating action paragraph stated that modification of the strut, in accordance with Boeing Alert Service Bulletin 757–54A0047, Revision 5, dated June 9, 2011, terminates the repetitive inspections of paragraphs (h), (l)(2), and (q) of the previous NPRM for Group 1, Configuration 1 airplanes.

We disagree with changing the supplemental NPRM to include this information as it is redundant to the information included in Boeing Alert Service Bulletin 757–54A0047, Revision 5, dated June 9, 2011. This service information defines Group 1, Configuration 1 airplanes, as airplanes that have not accomplished the modifiction described in Boeing Service Bulletin 757–54–0035, thus the signficance of the strut modification accomplishment is clearly specified. We have not changed the supplemental NPRM in this regard.

Request To Add an AMOC Into the Previous NPRM (76 FR 52901, August 24, 2011)

Boeing requested we add a paragraph to the previous NPRM (76 FR 52901, August 24, 2011) stating that inspections and repairs done in accordance with Boeing Alert Service Bulletin 757–54A0047, Revision 5, dated June 9, 2011, are an AMOC for the corresponding requirements of the AD. Boeing stated that the inspections and repairs for Boeing Alert Service Bulletin 757–54A0047, Revision 5, dated June 9, 2011, are equivalent to the corresponding inspections and repairs specified in Boeing Alert Service Bulletin 757–54A0047, Revision 4, dated June 24, 2010, and since Boeing Alert Service Bulletin 757–54A0047, Revision 5, dated June 9, 2011, is already published and in use by the operators, this would eliminate the need for a separate global AMOC for Boeing Alert Service Bulletin 757–54A0047, Revision 5, dated June 9, 2011, relative to this AD.

We partially agree. The previous NPRM (76 FR 52901, August 24, 2011) did reference Boeing Alert Service Bulletin 757–54A0047, Revision 4, dated June 24, 2010. We agree that the actions specified in Boeing Alert Service Bulletin 757–54A0047, Revision 5, dated June 9, 2011, are equivalent to the corresponding actions specified in Boeing Alert Service Bulletin 757–54A0047, Revision 4, dated June 24, 2010. However, as stated previously, the supplemental NPRM references Boeing Alert Service Bulletin 757–54A0047, Revision 5, dated June 9, 2011, eliminating the need for an AMOC. We have not changed the supplemental NPRM in this regard.

Explanation of Additional Changes Made to This Supplemental NPRM

We have revised certain headings throughout this supplemental NPRM.

The credit for previous accomplishment of the actions required by AD 2008–05–10, Amendment 39–15404 (73 FR 11347, March 3, 2008), specified in paragraphs (n) and (o) of the previous NPRM (76 FR 52901, August 24, 2011), has been moved to paragraph (p) of the supplemental NPRM.

We have revised the heading and wording for paragraphs (n) and (o) of this AD. This change does not affect the intent of those paragraphs.

We revised paragraph (l) of this supplemental NPRM to refer to paragraphs (b) and (d) of AD 2004–12–07, Amendment 39–13666 (69 FR 33561, June 16, 2004), instead of paragraphs (b) and (c) of AD 2004–12–07, because paragraph (d) of AD 2004–12–07 contains the inspection of the fastener holes and inspection of the fasteners common to the lower spar fitting and strut aft bulkhead. Paragraph (c) of AD 2004–12–07 is a preliminary inspection of the middle gusset of the inboard side load fitting. We also revised paragraph (p) of this supplemental NPRM to reference paragraph (d) of AD 2004–12–07, instead of paragraph (c) of AD 2004–12–07.

FAA's Determination

We are proposing this supplemental NPRM because we evaluated all the relevant information and determined the unsafe condition described previously is likely to exist or develop in other products of the same type design. Certain changes described above expand the scope of the original NPRM (76 FR 52901, August 24, 2011). As a result, we have determined that it is necessary to reopen the comment period to provide additional opportunity for the public to comment on this supplemental NPRM.

Proposed Requirements of the Supplemental NPRM

This supplemental NPRM would retain all the requirements of AD 2008–05–10, Amendment 39–15404 (73 FR 11347, March 3, 2008); reduce the repetitive inspection interval for cracking, and add repetitive detailed inspections for cracking of the bulkhead, and repair if necessary. This supplemental NPRM would also, for certain airplanes, add an option to extend the repetitive intervals by also doing repetitive ultrasonic inspections for cracking of the bulkhead, and repair if necessary; and add an option to the high frequency eddy current inspection for cracking of the critical fastener holes, and repair if necessary. This supplemental NPRM would also require replacing certain horizontal and vertical flange fasteners in the strut-to-diagonal brace fittings and accomplishing the actions specified in the service information described previously, except as discussed under ''Differences Between the Supplemental NPRM and the Service Information.''

Differences Between the Supplemental NPRM and the Service Information

Boeing Alert Service Bulletin 757–54A0047, Revision 5, dated June 9, 2011, specifies to contact the manufacturer for instructions on how to repair certain conditions, but this supplemental NPRM would require repairing those conditions in one of the following ways:

- In accordance with a method that we approve; or
- Using data that meet the certification basis of the airplane, and that have been approved by the Boeing Commercial Airplanes Organization Designation Authorization (ODA) whom we have authorized to make those findings.

Accomplishment of the actions required in paragraph (o) of this supplemental NPRM would terminate the inspection requirements of paragraphs (g), (h), (j), and (m) of this supplemental NPRM for Group 1, Configuration 2 airplanes; and Group 2 airplanes; as identified in Boeing Alert Service Bulletin 757–54A0047, Revision 5, dated June 9, 2011.

Costs of Compliance

We estimate that this proposed AD affects 309 airplanes of U.S. registry.

We estimate the following costs to comply with this proposed AD:

ESTIMATED COSTS

Action	Labor cost	Parts cost	Cost per product	Cost on U.S. operators
Part I Inspection on fasteners and shims—vertical flange [retained actions from AD 2008–05–10, Amendment 39–15404 (73 FR 11347, March 3, 2008)]	28 work-hours × $85 per hour = $2,380 per inspection cycle	$0	$2,380 per inspection cycle	$735,420 per inspection cycle

ESTIMATED COSTS—Continued

Action	Labor cost	Parts cost	Cost per product	Cost on U.S. operators
Part II Inspection on fasteners—horizontal flange [retained actions from AD 2008–05–10, Amendment 39–15404 (73 FR 11347, March 3, 2008)]	6 work-hours × $85 per hour = $510 per inspection cycle	0	$510 per inspection cycle	$157,590 per inspection cycle.
Part IV inspection on critical fasteners—horizontal flange [retained actions from AD 2008–05–10, Amendment 39–15404 (73 FR 11347, March 3, 2008)]	6 work-hours × $85 per hour = $510 per inspection cycle	0	$510 per inspection cycle	$157,590 per inspection cycle.
Part II Additional inspection actions on fasteners—horizontal flange [new proposed action]	10 work-hours × $85 per hour = $850 per inspection cycle	0	$850 per inspection cycle	$262,650 per inspection cycle.
Part IV inspection on critical fasteners—horizontal flange [new proposed action]	8 to 22 work-hours × $85 per hour = $680 to $1,870 per inspection cycle	0	$680 to $1,870 per inspection cycle	$210,120 to $577,830 per inspection cycle.
Part V fastener replacement flange [new proposed action]	Up to 37 work-hours × $85 per hour = $3,145 per strut	750	Up to $3,895 per strut	Up to $1,203,555 per strut.

We have received no definitive data that would enable us to provide cost estimates for the on-condition actions specified in this proposed AD.

Authority for This Rulemaking

Title 49 of the United States Code specifies the FAA's authority to issue rules on aviation safety. Subtitle I, section 106, describes the authority of the FAA Administrator. ''Subtitle VII: Aviation Programs'' describes in more detail the scope of the Agency's authority.

We are issuing this rulemaking under the authority described in Subtitle VII, Part A, Subpart III, Section 44701: ''General requirements.'' Under that section, Congress charges the FAA with promoting safe flight of civil aircraft in air commerce by prescribing regulations for practices, methods, and procedures the Administrator finds necessary for safety in air commerce. This regulation is within the scope of that authority because it addresses an unsafe condition that is likely to exist or develop on products identified in this rulemaking action.

Regulatory Findings

We determined that this proposed AD would not have federalism implications under Executive Order 13132. This proposed AD would not have a substantial direct effect on the States, on the relationship between the national Government and the States, or on the distribution of power and responsibilities among the various levels of government.

For the reasons discussed above, I certify this proposed regulation:

(1) Is not a ''significant regulatory action'' under Executive Order 12866,

(2) Is not a ''significant rule'' under the DOT Regulatory Policies and Procedures (44 FR 11034, February 26, 1979),

(3) Will not affect intrastate aviation in Alaska, and

(4) Will not have a significant economic impact, positive or negative, on a substantial number of small entities under the criteria of the Regulatory Flexibility Act.

List of Subjects in 14 CFR Part 39

Air transportation, Aircraft, Aviation safety, Incorporation by reference, Safety.

The Proposed Amendment

Accordingly, under the authority delegated to me by the Administrator, the FAA proposes to amend 14 CFR part 39 as follows:

PART 39—AIRWORTHINESS DIRECTIVES

1. The authority citation for part 39 continues to read as follows:

Authority: 49 U.S.C. 106(g), 40113, 44701.

§ 39.13 [Amended]

2. The FAA amends § 39.13 by removing airworthiness directive (AD) 2008–05–10, Amendment 39–15404 (73 FR 11347, March 3, 2008), and adding the following new AD:

The Boeing Company: Docket No. FAA–2011–0724; Directorate Identifier 2010–NM–181–AD.

(a) Comments Due Date

The FAA must receive comments on this AD action by August 6, 2012.

(b) Affected ADs

This AD supersedes AD 2008–05–10, Amendment 39–15404 (73 FR 11347, March 3, 2008).

(c) Applicability

This AD applies to The Boeing Company Model 757–200, –200PF, and –200CB series airplanes; certificated in any category; line numbers 1 through 1048 inclusive; powered by Rolls-Royce engines.

(d) Subject

Joint Aircraft System Component (JASC)/Air Transport Association (ATA) of America Code 54, Nacelles/Pylons.

(e) Unsafe Condition

This AD was prompted by reports of loose fasteners and cracks at the joint common to the aft torque bulkhead and strut-to-diagonal brace fitting, and one report of such damage occurring less than 3,000 flight cycles after the last inspection. We are issuing this AD to detect and correct cracks, loose and broken bolts, and shim migration in the joint between the aft torque bulkhead and the strut-to-diagonal brace fitting, which could result in damage to the strut and consequent separation of the strut and engine from the airplane.

(f) Compliance

Comply with this AD within the compliance times specified, unless already done.

(g) Retained One-Time Inspection and Repair With Optional Inspection Method, With Reduced Repetitive Intervals and New Optional Inspection Method

This paragraph restates the one-time inspection and repair with optional inspection method required by paragraph (g) of AD 2008–05–10, Amendment 39–15404 (73 FR 11347, March 3, 2008), with reduced repetitive intervals, and a new optional inspection method, with revised service information. For airplanes identified in paragraphs (g)(1) and (g)(2) of this AD: Within 90 days after August 24, 2007 (the effective date of AD 2007–16–13, Amendment 39–15152 (72 FR 44753, August 9, 2007)), do a high frequency eddy current (HFEC) inspection for cracking of the four critical fastener holes in the horizontal flange and, before further flight, do all applicable

repairs, in accordance with Part IV of the Accomplishment Instructions of Boeing Alert Service Bulletin 757–54A0047, Revision 3, dated June 27, 2007; Boeing Alert Service Bulletin 757–54A0047, Revision 4, dated June 24, 2010; or Boeing Alert Service Bulletin 757–54A0047, Revision 5, dated June 9, 2011; except as required by paragraph (i)(3) of this AD. As of the effective date of this AD, only Boeing Alert Service Bulletin 757–54A0047, Revision 5, dated June 9, 2011, may be used to accomplish the actions required by this paragraph. Doing an ultrasonic inspection for cracking of the fasteners, in accordance with Part IV of the Accomplishment Instructions of Boeing Alert Service Bulletin 757–54A0047, Revision 4, dated June 24, 2010; or Boeing Alert Service Bulletin 757–54A0047, Revision 5, dated June 9, 2011; is an acceptable method for compliance with the HFEC inspection requirement of this paragraph.

(1) Airplanes on which findings on the horizontal or vertical fasteners or the shims led to a rejection of any fastener during the actions specified in Boeing Alert Service Bulletin 757–54A0047, dated November 13, 2003; or Boeing Service Bulletin 757–54A0047, Revision 1, dated March 24, 2005.

(2) Airplanes that had equivalent findings prior to Boeing Alert Service Bulletin 757–54A0047, dated November 13, 2003, except for findings on airplanes identified as Group 1, Configuration 2, in Boeing Alert Service Bulletin 757–54A0047, Revision 3, dated June 27, 2007, that were prior to the incorporation of Boeing Service Bulletin 757–54–0035.

(h) Retained Repetitive Inspection and Repair, With Reduced Interval

This paragraph restates the repetitive inspection and repair required by paragraph (h) of AD 2008–05–10, Amendment 39–15404 (73 FR 11347, March 3, 2008), with reduced repetitive intervals and revised service information. At the applicable initial times specified in paragraph 1.E., ''Compliance,'' of Boeing Alert Service Bulletin 757–54A0047, Revision 3, dated June 27, 2007, except as required by paragraphs (i)(1) and (i)(2) of this AD: Do the inspections specified in paragraphs (h)(1), (h)(2), and (h)(3) of this AD, and before further flight, do all the applicable related investigative actions and repairs, by doing all the actions specified in Parts I and II of the Accomplishment Instructions of Boeing Alert Service Bulletin 757–54A0047, Revision 3, dated June 27, 2007; or by doing all the actions in Part I and in Step 2 of Part II of the Accomplishment Instructions of Boeing Alert Service Bulletin 757–54A0047 Revision 4, dated June 24, 2010, or Boeing Alert Service Bulletin 757–54A0047, Revision 5, dated June 9, 2011, except as required by paragraph (i)(3) of this AD. As of the effective date of this AD, only Boeing Alert Service Bulletin 757–54A0047, Revision 5, dated June 9, 2011, may be used to accomplish the actions required by this paragraph. Repeat the inspections required by this paragraph at the times specified in paragraph (h)(4) of this AD.

(1) Do detailed inspections of the shim installations between the vertical flange and bulkhead to determine if there are signs of movement.

(2) Do detailed inspections of the four fasteners in the vertical flange to determine if there are signs of movement or if there are gaps under the head or collar.

(3) Do detailed inspections of the fasteners that hold the strut to the horizontal flange of the strut-to-diagonal brace fitting to determine if there are signs of movement or if there are gaps under the head or collar.

(4) Repeat the inspections required by paragraph (h) of this AD at the earlier of the times specified in paragraphs (h)(4)(i) and (h)(4)(ii) of this AD. Thereafter, repeat the inspections at intervals not to exceed the applicable intervals specified in paragraph 1.E., ''Compliance,'' of Boeing Alert Service Bulletin 757–54A0047, Revision 5, dated June 9, 2011.

(i) At intervals not to exceed the applicable intervals specified in paragraph 1.E., ''Compliance,'' of Boeing Alert Service Bulletin 757–54A0047, Revision 3, dated June 27, 2007.

(ii) At intervals not to exceed the applicable intervals specified in paragraph 1.E., ''Compliance,'' of Boeing Alert Service Bulletin 757–54A0047, Revision 5, dated June 9, 2011; or within 90 days after the effective date of this AD; whichever occurs later.

(i) Retained Exceptions to Alert Service Bulletin Procedures

This paragraph restates the exceptions to alert service bulletin procedures required by paragraphs (i), (j), and (k) of AD 2008–05–10, Amendment 39–15404 (73 FR 11347, March 3, 2008), with revised service information.

(1) Where Boeing Alert Service Bulletin 757–54A0047, Revision 3, dated June 27, 2007, specifies a compliance time relative to ''the date on this service bulletin,'' this AD requires compliance within the corresponding specified time relative to the effective date of AD 2007–16–13, Amendment 39–15152 (72 FR 44753, August 9, 2007).

(2) Where Boeing Alert Service Bulletin 757–54A0047, Revision 3, dated June 27, 2007, specifies a compliance time relative to the ''date of issuance of airworthiness certificate,'' this AD requires compliance within the corresponding time relative to the date of issuance of the original standard airworthiness certificate or the date of issuance of the original export certificate of airworthiness.

(3) If any crack is found during any inspection required by this AD, and Boeing Alert Service Bulletin 757–54A0047, Revision 3, dated June 27, 2007; Boeing Alert Service Bulletin 757–54A0047, Revision 4, dated June 24, 2010; or Boeing Alert Service Bulletin 757–54A0047, Revision 5, dated June 9, 2011; specifies to contact Boeing for appropriate action: Before further flight, repair the crack using a method approved in accordance with the procedures specified in paragraph (q) of this AD.

(j) Retained Inspection/Repair for Airplanes for Which There Are No Conclusive Inspection Records

This paragraph restates the inspection/repair requirements for airplanes for which there are no conclusive inspection records, as required by paragraph (l) of AD 2008–05–10, Amendment 39–15404 (73 FR 11347, March 3, 2008), with revised service information. For airplanes for which there are no conclusive records showing no loose or missing fasteners during previous inspections done in accordance with the requirements of AD 2007–16–13, Amendment 39–15152 (72 FR 44753, August 9, 2007); or AD 2005–12–04, Amendment 39–14120 (70 FR 34313 June 14, 2005): Do the actions specified in paragraphs (j)(1) and (j)(2) of this AD, at the times specified in those paragraphs, as applicable.

(1) Within 90 days after March 18, 2008 (the effective date of AD 2008–05–10, Amendment 39–15404 (73 FR 11347, March 3, 2008)), do the actions specified in paragraph (g) of this AD, except as required by paragraph (i)(3) of this AD.

(2) At the applicable initial times specified in paragraph 1.E., ''Compliance,'' of Boeing Alert Service Bulletin 757–54A0047, Revision 3, dated June 27, 2007, do the actions specified in paragraph (h) of this AD, except as required by paragraphs (i)(2) and (k) of this AD. And, before further flight, do all applicable related investigative actions and repairs, by doing all the actions specified in Parts I and II of the Accomplishment Instructions of Boeing Alert Service Bulletin 757–54A0047, Revision 3, dated June 27, 2007; or in Part 1 and in Step 2 of Part II of the Accomplishment Instructions of Boeing Alert Service Bulletin 757–54A0047 Revision 4, dated June 24, 2010, or Boeing Alert Service Bulletin 757–54A0047, Revision 5, dated June 9, 2011, except as required by paragraph (i)(3) of this AD. As of the effective date of this AD, only Boeing Alert Service Bulletin 757–54A0047, Revision 5, dated June 9, 2011, may be used to accomplish the actions required by this paragraph. Repeat the actions specified in paragraph (h) of this AD at the times specified in paragraph (h)(4) of this AD.

(k) Retained Exception to Alert Service Bulletin Procedures

This paragraph restates the exception to alert service bulletin procedures required by paragraph (m) of AD 2008–05–10, Amendment 39–15404 (73 FR 11347, March 3, 2008). Where Boeing Alert Service Bulletin 757–54A0047, Revision 3, dated June 27, 2007, specifies a compliance time relative to ''the date on this service bulletin,'' this AD requires compliance within the corresponding specified time relative to the effective date of AD 2008–05–10.

(l) Retained Acceptable Method of Compliance With Certain Requirements of AD 2004–12–07, Amendment 39–13666 (69 FR 33561 June 16, 2004)

This paragraph restates an acceptable method of compliance with certain requirements of AD 2004–12–07, Amendment 39–13666 (69 FR 33561 June 16, 2004), specified by paragraph (p) of AD 2008–05–10, Amendment 39–15404 (73 FR 11347, March 3, 2008). Accomplishing the actions specified in paragraphs (g) and (h) of this AD terminates the requirements specified in paragraphs (b) and (d) of AD 2004–12–07.

(m) New Repetitive Inspections and Repair

At the applicable initial compliance times specified in paragraph (n) of this AD: Do the applicable actions specified in paragraph (m)(1) or (m)(2) of this AD, in accordance with Step 3 of Part II of the Accomplishment Instructions of Boeing Alert Service Bulletin 757–54A0047, Revision 4, dated June 24, 2010; or Boeing Alert Service Bulletin 757–54A0047, Revision 5, dated June 9, 2011. If no cracking is found, repeat the inspections thereafter at intervals not to exceed the applicable intervals specified in paragraph 1.E., ''Compliance,'' of the Accomplishment Instructions of Boeing Alert Service Bulletin 757–54A0047, Revision 5, dated June 9, 2011. If any crack is found during any inspection required by this paragraph, before further flight, repair the crack using a method approved in accordance with the procedures specified in paragraph (q) of this AD.

(1) For Group 1, Configuration 1 airplanes identified in Boeing Alert Service Bulletin 757–54A0047, Revision 5, dated June 9, 2011: Do the actions specified in paragraph (m)(1)(i) or (m)(1)(ii) of this AD.

(i) Do a detailed inspection for cracking of the bulkhead in the area around the access door cutout and around the critical fasteners in the horizontal flange.

(ii) Do a detailed inspection for cracking of the bulkhead in the area around the access door cutout and around the critical fasteners in the horizontal flange, and do an ultrasonic inspection for cracking of the bulkhead around the fasteners in the horizontal flange. Doing the actions in this paragraph extends the repetitive intervals of the inspections required by paragraph (n) of this AD.

(2) For Group 1, Configuration 2 airplanes; and Group 2 airplanes; identified in Boeing Alert Service Bulletin 757–54A0047, Revision 5, dated June 9, 2011: Do a detailed inspection for cracking of the bulkhead in the area around the access door cutout and around the critical fasteners in the horizontal flange.

(n) New Compliance Times for Paragraph (m) of This AD

At the applicable times specified in paragraphs (n)(1) and (n)(2) of this AD, do the actions required by paragraph (m) of this AD.

(1) For Group 1, Configuration 1 airplanes identified in Boeing Alert Service Bulletin 757–54A0047, Revision 5, dated June 9, 2011: At the later of the times specified in paragraph (n)(1)(i) or (n)(1)(ii) of this AD.

(i) Within 1,800 flight cycles after accomplishing the most recent inspection required by paragraph (h) or (j) of this AD.

(ii) Within 90 days after the effective date of this AD.

(2) For Group 1, Configuration 2 airplanes; and Group 2 airplanes; identified in Boeing Alert Service Bulletin 757–54A0047, Revision 5, dated June 9, 2011: At the later of the times specified in paragraph (n)(2)(i) or (n)(2)(ii) of this AD.

(i) Within 3,000 flight cycles after accomplishing the most recent inspection required by paragraph (h) or (j) of this AD.

(ii) Within 90 days after the effective date of this AD.

(o) New Terminating Action for Certain Airplanes: Fastener Replacement

For Group 1, Configuration 2 airplanes; and Group 2 airplanes; as identified in Boeing Alert Service Bulletin 757–54A0047, Revision 5, dated June 9, 2011: Within 9,000 flight cycles or 54 months after the effective date of this AD, whichever occurs first, replace the horizontal and vertical flange fasteners in the strut-to-diagonal brace fitting on the number 1 and number 2 struts with new fasteners and do all related investigative and applicable corrective actions, in accordance with the Accomplishment Instructions of Boeing Alert Service Bulletin 757–54A0047, Revision 5, dated June 9, 2011, except where Boeing Alert Service Bulletin 757–54A0047, Revision 5, dated June 9, 2011, specifies to contact Boeing for repair instructions, before further flight, repair using a method approved in accordance with the procedures specified in paragraph (q) of this AD. Do all related investigative and corrective actions before further flight. Accomplishment of the actions required in paragraph (o) of this AD terminates the inspection requirements of paragraphs (g), (h), (j), and (m) of this AD for Group 1, Configuration 2 airplanes; and Group 2 airplanes; as identified in Boeing Alert Service Bulletin 757–54A0047, Revision 5, dated June 9, 2011.

(p) Credit for Previous Actions

(1) Except for the actions specified in paragraphs (j), (m), and (o) of this AD, this paragraph provides credit for the actions required by paragraphs (g) and (h) of this AD, if those actions were done before March 18, 2008 (the effective date of AD 2008–05–10, Amendment 39–15404 (73 FR 11347, March 3, 2008), using Boeing Service Bulletin 757–54A0047, Revision 1, dated March 24, 2005; or Boeing Alert Service Bulletin 757–54A0047, Revision 2, dated January 31, 2007.

(2) This paragraph provides credit for the initial inspection required by paragraph (h) of this AD, if that inspection was done before June 29, 2005 (the effective date of AD 2005–12–04, Amendment 39–14120 (70 FR 34313, June 14, 2005)), using the actions required by paragraph (b) or (d), as applicable, of AD 2004–12–07, Amendment 39–13666 (69 FR 33561, June 16, 2004).

(q) Alternative Methods of Compliance (AMOCs)

(1) The Manager, Seattle Aircraft Certification Office (ACO), FAA, has the authority to approve AMOCs for this AD, if requested using the procedures found in 14 CFR 39.19. In accordance with 14 CFR 39.19, send your request to your principal inspector or local Flight Standards District Office, as appropriate. If sending information directly to the manager of the ACO, send it to the attention of the person identified in the Related Information section of this AD. Information may be emailed to: *9-ANM-Seattle-ACO-AMOC-Requests@faa.gov.*

(2) Before using any approved AMOC, notify your appropriate principal inspector, or lacking a principal inspector, the manager of the local flight standards district office/ certificate holding district office.

(3) An AMOC that provides an acceptable level of safety may be used for any repair required by this AD if it is approved by the Boeing Commercial Airplanes Organization Designation Authorization (ODA) that has been authorized by the Manager, Seattle ACO, to make those findings. For a repair method to be approved, the repair must meet the certification basis of the airplane and the approval must specifically refer to this AD.

(4) AMOCs approved previously in accordance with AD 2004–12–07, Amendment 39–13666 (69 FR 33561, June 16, 2004), are approved as AMOCs for the corresponding provisions of this AD.

(5) AMOCs approved previously in accordance with AD 2005–12–04, Amendment 39–14120 (70 FR 34313, June 14, 2005), are approved as AMOCs for the corresponding provisions of this AD.

(6) AMOCs approved previously in accordance with AD 2007–16–13, Amendment 39–15152 (72 FR 44753, August 9, 2007), are approved as AMOCs for the corresponding provisions of this AD.

(7) AMOCs approved previously in accordance with AD 2008–05–10, Amendment 39–15404 (73 FR 11347, March 3, 2008), are approved as AMOCs for the corresponding provisions of this AD.

(r) Related Information

(1) For more information about this AD, contact Nancy Marsh, Aerospace Engineer, Airframe Branch, ANM–120S, Seattle Aircraft Certification Office (ACO), FAA, 1601 Lind Avenue SW., Renton, Washington 98057–3356; phone 425–917–6440; fax 425–917–6590; email: *Nancy.Marsh@faa.gov.*

(2) For service information identified in this AD, contact Boeing Commercial Airplanes, Attention: Data & Services Management, P.O. Box 3707, MC 2H–65, Seattle, Washington 98124–2207; phone: 206–544–5000, extension 1; fax: 206–766–5680; Internet: *https://www.myboeingfleet.com.* You may review copies of the referenced service information at the FAA, Transport Airplane Directorate, 1601 Lind Avenue SW., Renton, Washington. For information on the availability of this material at the FAA, call 425–227–1221.

Issued in Renton, Washington, on June 14, 2012.

Kalene C. Yanamura,

Acting Manager, Transport Airplane Directorate, Aircraft Certification Service.

[FR Doc. 2012–15181 Filed 6–20–12; 8:45 am]

BILLING CODE 4910–13–P

DEPARTMENT OF TRANSPORTATION

Federal Aviation Administration

14 CFR Part 39

[Docket No. FAA–2012–0643; Directorate Identifier 2011–NM–190–AD]

RIN 2120–AA64

Airworthiness Directives; Fokker Services B.V. Airplanes

AGENCY: Federal Aviation Administration (FAA), DOT.

ACTION: Notice of proposed rulemaking (NPRM).

SUMMARY: We propose to supersede an existing airworthiness directive (AD) that applies to certain Fokker Services B.V. Model F.28 Mark 0070 and 0100 airplanes. The existing AD currently requires performing a detailed visual inspection for cracks of the pistons on the main landing gear (MLG), and replacing the affected pistons if necessary. Since we issued that AD, a new modification has been developed to safeguard the integrity of the MLG assembly and improve surface protection of the affected area of the MLG piston. This proposed AD would also require modifying the MLG by installing a piston containing a certain part number, and revising the aircraft maintenance program. We are proposing this AD to prevent MLG failure, possibly resulting in loss of control of the airplane during the landing roll-out.

DATES: We must receive comments on this proposed AD by August 6, 2012.

ADDRESSES: You may send comments by any of the following methods:

- *Federal eRulemaking Portal:* Go to *http://www.regulations.gov*. Follow the instructions for submitting comments.
- *Fax:* (202) 493–2251.
- *Mail:* U.S. Department of Transportation, Docket Operations, M–30, West Building Ground Floor, Room W12–140, 1200 New Jersey Avenue SE., Washington, DC 20590.
- *Hand Delivery:* U.S. Department of Transportation, Docket Operations, M–30, West Building Ground Floor, Room W12–140, 1200 New Jersey Avenue SE., Washington, DC, between 9 a.m. and 5 p.m., Monday through Friday, except Federal holidays.

For Fokker service information identified in this proposed AD, contact Fokker Services B.V., Technical Services Dept., P.O. Box 231, 2150 AE Nieuw-Vennep, the Netherlands; telephone +31 (0)252–627–350; fax +31 (0)252–627–211; email *technicalservices.fokkerservices@stork.com*; Internet *http://www.myfokkerfleet.com*. For Goodrich service information identified in this proposed AD, contact Goodrich, 1400 South Service Road, West Oakville, L6L 5Y7, Ontario, Canada, telephone +1–905–827–7777; fax +1–905–825–1583; Internet *http://www.goodrich.com/TechPubs*. You may review copies of the referenced service information at the FAA, Transport Airplane Directorate, 1601 Lind Avenue SW., Renton, Washington. For information on the availability of this material at the FAA, call 425–227–1221.

Examining the AD Docket

You may examine the AD docket on the Internet at *http://www.regulations.gov;* or in person at the Docket Operations office between 9 a.m. and 5 p.m., Monday through Friday, except Federal holidays. The AD docket contains this proposed AD, the regulatory evaluation, any comments received, and other information. The street address for the Docket Operations office (telephone (800) 647–5527) is in the **ADDRESSES** section. Comments will be available in the AD docket shortly after receipt.

FOR FURTHER INFORMATION CONTACT: Tom Rodriguez, Aerospace Engineer, International Branch, ANM–116, Transport Airplane Directorate, FAA, 1601 Lind Avenue SW., Renton, Washington 98057–3356; telephone 425–227–1137; fax 425–227–1149.

SUPPLEMENTARY INFORMATION:

Comments Invited

We invite you to send any written relevant data, views, or arguments about this proposed AD. Send your comments to an address listed under the **ADDRESSES** section. Include ''Docket No. FAA–2012–0643; Directorate Identifier 2011–NM–190–AD'' at the beginning of your comments. We specifically invite comments on the overall regulatory, economic, environmental, and energy aspects of this proposed AD. We will consider all comments received by the closing date and may amend this proposed AD based on those comments.

We will post all comments we receive, without change, to *http://www.regulations.gov,* including any personal information you provide. We will also post a report summarizing each substantive verbal contact we receive about this proposed AD.

Discussion

On January 31, 2011, we issued AD 2011–04–01, Amendment 39–16601 (76 FR 8618, February 15, 2011). That AD required actions intended to address an unsafe condition on the products listed above.

Since we issued AD 2011–04–01, Amendment 39–16601 (76 FR 8618, February 15, 2011), a new modification has been developed to safeguard the integrity of the MLG assembly and improve surface protection of the affected area of the MLG piston. The European Aviation Safety Agency (EASA), which is the Technical Agent for the Member States of the European Community, has issued EASA Airworthiness Directive 2011–0159, dated August 26, 2011 (referred to after this as ''the MCAI''), to correct an unsafe condition for the specified products. The MCAI states:

> During a normal walk around check on a F28 Mark 0100 aeroplane, a large crack was discovered in the lower portion of the right (RH) MLG piston. The affected MLG unit had accumulated 7,909 flight cycles (FC) at the time of detection. The piston was sent to Goodrich, the landing gear manufacturer, for detailed investigation, which revealed that the crack had been initiated by corrosion pits. The extent of the corrosion indicates that the initial crack existed for a substantial period before a high loading event caused the crack to grow further by ductile overload.
>
> This condition, if not detected and corrected, could lead to MLG failure during the landing roll-out, possibly resulting in damage to the aeroplane and injury to occupants.
>
> To address this potential unsafe condition, EASA issued AD 2009–0221 [which corresponds with FAA AD 2011–04–01, Amendment 39–16601 (76 FR 8618, February 15, 2011)] to require a one-time detailed visual inspection of the MLG pistons, the replacement of any MLG pistons on which cracks are detected, and the reporting of all findings to the aeroplane TC [type certificate] holder. No cracks were reported as a result of this inspection.
>
> Subsequently, a repetitive inspection was introduced in the Airworthiness Limitations Section (Fokker Services report SE–623 Issue 8) in Appendix 1 of the Maintenance Review Board (MRB) document to safeguard the integrity of the MLG assembly, pending the accomplishment of a terminating action.
>
> Goodrich issued Service Bulletin (SB) 41000–32–29 to introduce an improved surface protection (nickel plate) of the affected area of the MLG piston P/N [part number] 41141–3 and re-identification as P/N 41141–5, which is considered as a terminating action for the repetitive inspections.
>
> For the reasons described above, this [EASA] AD requires repetitive visual inspections of the P/N 41141–3 MLG piston for cracks and, depending on findings, replacement or modification of the MLG piston. This [EASA] AD also requires modification of the affected MLG by installing a piston P/N 41141–5.

You may obtain further information by examining the MCAI in the AD docket.

Relevant Service Information

Fokker Services B.V. has issued Fokker Service Bulletin SBF100–32–161, dated April 7, 2011; and Fokker Engineering Report, MRB Appendix 1, SE–623, Issue 8, dated March 17, 2011. Goodrich Aerospace Canada Ltd. has issued Goodrich Service Bulletin 41000–32–29, dated November 10, 2010. The actions described in this service information are intended to correct the unsafe condition identified in the MCAI.

FAA's Determination and Requirements of This Proposed AD

This product has been approved by the aviation authority of another country, and is approved for operation in the United States. Pursuant to our bilateral agreement with the State of Design Authority, we have been notified of the unsafe condition described in the MCAI and service information referenced above. We are proposing this AD because we evaluated all pertinent information and determined an unsafe condition exists and is likely to exist or develop on other products of the same type design.

Costs of Compliance

Based on the service information, we estimate that this proposed AD would affect about 2 products of U.S. registry.

The actions that are required by AD 2011–04–01, Amendment 39–16601 (76 FR 8618, February 15, 2011), and retained in this proposed AD take about 3 work-hours per product, at an average labor rate of $85 per work hour. Based on these figures, the estimated cost of the currently required actions is $255 per product.

We estimate that it would take about 26 work-hours per product to comply with the new basic requirements of this proposed AD. The average labor rate is $85 per work-hour. Based on these figures, we estimate the cost of the proposed AD on U.S. operators to be $4,420, or $2,210 per product.

Authority for This Rulemaking

Title 49 of the United States Code specifies the FAA's authority to issue rules on aviation safety. Subtitle I, section 106, describes the authority of the FAA Administrator. ''Subtitle VII: Aviation Programs,'' describes in more detail the scope of the Agency's authority.

We are issuing this rulemaking under the authority described in ''Subtitle VII, Part A, Subpart III, Section 44701: General requirements.'' Under that section, Congress charges the FAA with promoting safe flight of civil aircraft in air commerce by prescribing regulations for practices, methods, and procedures the Administrator finds necessary for safety in air commerce. This regulation is within the scope of that authority because it addresses an unsafe condition that is likely to exist or develop on products identified in this rulemaking action.

Regulatory Findings

We determined that this proposed AD would not have federalism implications under Executive Order 13132. This proposed AD would not have a substantial direct effect on the States, on the relationship between the national Government and the States, or on the distribution of power and responsibilities among the various levels of government.

For the reasons discussed above, I certify this proposed regulation:

1. Is not a ''significant regulatory action'' under Executive Order 12866;

2. Is not a ''significant rule'' under the DOT Regulatory Policies and Procedures (44 FR 11034, February 26, 1979);

3. Will not affect intrastate aviation in Alaska; and

4. Will not have a significant economic impact, positive or negative, on a substantial number of small entities under the criteria of the Regulatory Flexibility Act.

We prepared a regulatory evaluation of the estimated costs to comply with this proposed AD and placed it in the AD docket.

List of Subjects in 14 CFR Part 39

Air transportation, Aircraft, Aviation safety, Incorporation by reference, Safety.

The Proposed Amendment

Accordingly, under the authority delegated to me by the Administrator, the FAA proposes to amend 14 CFR part 39 as follows:

PART 39—AIRWORTHINESS DIRECTIVES

1. The authority citation for part 39 continues to read as follows:

Authority: 49 U.S.C. 106(g), 40113, 44701.

§ 39.13 [Amended]

2. The FAA amends § 39.13 by removing airworthiness directive (AD) 2011–04–01, Amendment 39–16601 (76 FR 8618, February 15, 2011), and adding the following new AD:

Fokker Services B.V.: Docket No. FAA–2012–0643; Directorate Identifier 2011–NM–190–AD.

(a) Comments Due Date

We must receive comments by August 6, 2012.

(b) Affected ADs

This AD supersedes AD 2011–04–01, Amendment 39–16601 (76 FR 8618, February 15, 2011).

(c) Applicability

(1) This AD applies to Fokker Services B.V. Model F.28 Mark 0070 and 0100 airplanes; certificated in any category; all serial numbers, equipped with Goodrich (formerly Menasco, Colt Industries) main landing gear (MLG) units, part numbers (P/N) 41050–7, 41050–8, 41050–9, 41050–10, 41050–11, 41050–12, 41050–13, 41050–14, 41050–15, 41050–16, 41060–1, 41060–2, 41060–3, 41060–4, 41060–5 or 41060–6.

(2) This AD requires revisions to certain operator maintenance documents to include new actions (e.g., inspections). Compliance with these inspections is required by 14 CFR 91.403(c). For airplanes that have been previously modified, altered, or repaired in the areas addressed by these actions, the operator may not be able to accomplish the actions described in the revisions. In this situation, to comply with 14 CFR 91.403(c), the operator must request approval for an alternative method of compliance according to paragraph (n)(1) of this AD. The request should include a description of changes to the required inspections that will ensure the continued operational safety of the airplane.

(d) Subject

Air Transport Association (ATA) of America Code 32: Main Landing Gear.

(e) Reason

This AD was prompted by a new modification developed to safeguard the integrity of the MLG assembly and improve surface protection of the affected area of the MLG piston. We are issuing this AD to prevent MLG failure, possibly resulting in loss of control of the airplane during the landing roll-out.

(f) Compliance

You are responsible for having the actions required by this AD performed within the compliance times specified, unless the actions have already been done.

(g) Retained Initial Inspection

This paragraph restates the initial inspection required by paragraph (g) of AD 2011–04–01, Amendment 39–16601 (76 FR 8618, February 15, 2011). Within 30 days after March 22, 2011 (the effective date of AD 2011–04–01), do a detailed visual inspection for cracks of the MLG pistons, in accordance with the Accomplishment Instructions of Fokker Service Bulletin SBF100–32–158, dated October 2, 2009.

(h) Retained Replacement

This paragraph restates the replacement required by paragraph (h) of AD 2011–04–01, Amendment 39–16601 (76 FR 8618, February 15, 2011). If any cracked MLG piston is found during the inspection required by paragraph (g) of this AD, before further flight, replace the affected piston with a serviceable part, in accordance with the Accomplishment Instructions of Fokker Service Bulletin SBF100–32–158, dated October 2, 2009.

(i) New Requirement: Modification

Within 120 months, or during a scheduled overhaul of the MLG, whichever occurs first after the effective date of this AD: Modify the MLG by installing a piston containing P/N 41141–5, in accordance with the Accomplishment Instructions of Fokker Service Bulletin SBF100–32–161, dated April 7, 2011. Re-installation of a MLG piston which has been modified and re-identified as P/N 41141–5, in accordance with the Accomplishment Instructions of Goodrich Service Bulletin 41000–32–29, dated November 10, 2010, is an optional method of

compliance for the requirements in this paragraph of this AD. It is acceptable to operate an airplane with one MLG having a P/N 41141–5 piston installed, and the other MLG having a P/N 41141–3 piston installed, provided all MLG P/N 41141–3 are replaced within the compliance times specified in paragraph (i) of this AD.

(j) New Requirement: Parts Installation

After 120 months after the effective date of this AD: No person may install a MLG piston, P/N 41141–3, or a MLG unit equipped with a MLG piston P/N 41141–3, on any airplane.

(k) New Requirement: Revising the Airplane Maintenance Program

Within two months after the effective date of this AD: Revise the airplane maintenance program by incorporating Task 321100–01–16, inspection of the MLG piston, and associated thresholds and intervals described in Fokker Engineering Report, MRB Appendix 1, SE–623, Issue 8, dated March 17, 2011. The initial compliance time for Task 321100–01–16 is within two months after the effective date of this AD.

(l) No Alternative Actions or Intervals

After accomplishing the revisions required by paragraph (k) of this AD, no alternative actions (e.g., inspections) or intervals may be used other than those specified in Fokker Engineering Report, MRB Appendix 1, SE–623, Issue 8, dated March 17, 2011, unless the actions and intervals are approved as an AMOC in accordance with the procedures specified in paragraph (m)(1) of this AD.

(m) Other FAA AD Provisions

The following provisions also apply to this AD:

(1) *Alternative Methods of Compliance (AMOCs):* The Manager, International Branch, ANM–116, FAA, has the authority to approve AMOCs for this AD, if requested using the procedures found in 14 CFR 39.19. In accordance with 14 CFR 39.19, send your request to your principal inspector or local Flight Standards District Office, as appropriate. If sending information directly to the International Branch, send it to ATTN: Tom Rodriguez, Aerospace Engineer, International Branch, ANM–116, Transport Airplane Directorate, FAA, 1601 Lind Avenue SW., Renton, Washington 98057–3356; telephone 425–227–1137; fax 425–227–1149. Information may be emailed to: *9-ANM-116-AMOC-REQUESTS@faa.gov*. Before using any approved AMOC, notify your appropriate principal inspector, or lacking a principal inspector, the manager of the local flight standards district office/certificate holding district office. The AMOC approval letter must specifically reference this AD.

(2) *Airworthy Product:* For any requirement in this AD to obtain corrective actions from a manufacturer or other source, use these actions if they are FAA-approved. Corrective actions are considered FAA-approved if they are approved by the State of Design Authority (or their delegated agent). You are required to assure the product is airworthy before it is returned to service.

(n) Related Information

(1) Refer to MCAI European Aviation Safety Agency Airworthiness Directive 2011–0159, dated August 26, 2011; and the service information specified in paragraphs (n)(1)(i) through (n)(1)(iv) of this AD; for related information.

(i) Fokker Service Bulletin SBF100–32–161, dated April 7, 2011.

(ii) Fokker Services Engineering Report, MRB Appendix 1, SE–623, Issue 8, dated March 17, 2011.

(iii) Goodrich Service Bulletin 41000–32–29, dated November 10, 2010.

(iv) Fokker Service Bulletin SBF100–32–158, dated October 2, 2009.

(2) For Fokker service information identified in this AD, contact Fokker Services B.V., Technical Services Dept., P.O. Box 231, 2150 AE Nieuw-Vennep, the Netherlands; telephone +31 (0)252–627–350; fax +31 (0)252–627–211; email *technicalservices.fokkerservices@stork.com*; Internet *http://www.myfokkerfleet.com*. For Goodrich service information identified in this AD, contact Goodrich, 1400 South Service Road, West Oakville, L6L 5Y7, Ontario, Canada, telephone +1–905–827–7777; fax +1–905–825–1583; Internet *http://www.goodrich.com/TechPubs*. You may review copies of the referenced service information at the FAA, Transport Airplane Directorate, 1601 Lind Avenue SW., Renton, Washington. For information on the availability of this material at the FAA, call 425–227–1221.

Issued in Renton, Washington, on June 12, 2012.

Kalene C. Yanamura,

Acting Manager, Transport Airplane Directorate, Aircraft Certification Service.

[FR Doc. 2012–15166 Filed 6–20–12; 8:45 am]

BILLING CODE 4910–13–P

DEPARTMENT OF TRANSPORTATION

Federal Aviation Administration

14 CFR Part 39

[Docket No. FAA–2012–0642; Directorate Identifier 2011–NM–262–AD]

RIN 2120–AA64

Airworthiness Directives; BAE SYSTEMS (OPERATIONS) LIMITED Airplanes

AGENCY: Federal Aviation Administration (FAA), DOT.

ACTION: Notice of proposed rulemaking (NPRM).

SUMMARY: We propose to adopt a new airworthiness directive (AD) for certain BAE SYSTEMS (OPERATIONS) LIMITED Model BAe 146 series airplanes and Model Avro 146–RJ series airplanes. This proposed AD was prompted by hydraulic pipe ruptures in the center of the cabin resulting in passengers being contaminated with hydraulic fluid. This proposed AD would require installing a hydraulic fluid containment system. We are proposing this AD to prevent harmful or hazardous concentrations of hydraulic fluid or hydraulic vapor from entering the passenger compartment, possibly resulting in injury to the passengers.

DATES: We must receive comments on this proposed AD by August 6, 2012.

ADDRESSES: You may send comments by any of the following methods:

- *Federal eRulemaking Portal:* Go to *http://www.regulations.gov*. Follow the instructions for submitting comments.
- *Fax:* (202) 493–2251.
- *Mail:* U.S. Department of Transportation, Docket Operations, M–30, West Building Ground Floor, Room W12–140, 1200 New Jersey Avenue SE., Washington, DC 20590.
- *Hand Delivery:* U.S. Department of Transportation, Docket Operations, M–30, West Building Ground Floor, Room W12–140, 1200 New Jersey Avenue SE., Washington, DC, between 9 a.m. and 5 p.m., Monday through Friday, except Federal holidays.

For service information identified in this proposed AD, contact BAE SYSTEMS (OPERATIONS) LIMITED, Customer Information Department, Prestwick International Airport, Ayrshire, KA9 2RW, Scotland, United Kingdom; telephone +44 1292 675207; fax +44 1292 675704; email *RApublications@baesystems.com;* Internet *http://www.baesystems.com/Businesses/RegionalAircraft/index.htm*. You may review copies of the referenced service information at the FAA, Transport Airplane Directorate, 1601 Lind Avenue SW., Renton, Washington. For information on the availability of this material at the FAA, call 425–227–1221.

Examining the AD Docket

You may examine the AD docket on the Internet at *http://www.regulations.gov;* or in person at the Docket Operations office between 9 a.m. and 5 p.m., Monday through Friday, except Federal holidays. The AD docket contains this proposed AD, the regulatory evaluation, any comments received, and other information. The street address for the Docket Operations office (telephone (800) 647–5527) is in the **ADDRESSES** section. Comments will be available in the AD docket shortly after receipt.

FOR FURTHER INFORMATION CONTACT: Todd Thompson, Aerospace Engineer, International Branch, ANM–116, Transport Airplane Directorate, FAA, 1601 Lind Avenue SW., Renton,

Washington 98057–3356; telephone (425) 227–1175; fax (425) 227–1149.

SUPPLEMENTARY INFORMATION:

Comments Invited

We invite you to send any written relevant data, views, or arguments about this proposed AD. Send your comments to an address listed under the **ADDRESSES** section. Include ''Docket No. FAA–2012–0642; Directorate Identifier 2011–NM–262–AD'' at the beginning of your comments. We specifically invite comments on the overall regulatory, economic, environmental, and energy aspects of this proposed AD. We will consider all comments received by the closing date and may amend this proposed AD based on those comments.

We will post all comments we receive, without change, to *http://www.regulations.gov,* including any personal information you provide. We will also post a report summarizing each substantive verbal contact we receive about this proposed AD.

Discussion

The European Aviation Safety Agency (EASA), which is the Technical Agent for the Member States of the European Community, has issued EASA Airworthiness Directive 2011–0220, dated November 11, 2011 (referred to after this as ''the MCAI''), to correct an unsafe condition for the specified products. The MCAI states:

> Cases of hydraulic pipe ruptures in the centre of the cabin of BAe 146 aeroplanes have been reported, which have resulted in the passengers being contaminated with hydraulic fluid. The results of the investigations have shown that the pipe failures were caused by a combination of seam welded pipes, bends in the pipe runs with small bend radii and fatigue damage due to pressure variations.
>
> This condition, if not corrected, could lead to harmful or hazardous concentrations of hydraulic fluid or hydraulic vapour entering the passenger compartment, possibly resulting in injury to the occupants.
>
> For the reasons described above, this [EASA] AD requires the installation of a flexible envelope around the hydraulic pipe group where the failures have occurred to capture and contain any fluid escaping from a burst pipe and channel it below floor level into the forward cargo bay.

You may obtain further information by examining the MCAI in the AD docket.

Relevant Service Information

BAE SYSTEMS (OPERATIONS) LIMITED has issued Modification Service Bulletin SB.29–048–30676A, Revision 2, dated December 23, 2010. The actions described in this service information are intended to correct the unsafe condition identified in the MCAI.

FAA's Determination and Requirements of This Proposed AD

This product has been approved by the aviation authority of another country, and is approved for operation in the United States. Pursuant to our bilateral agreement with the State of Design Authority, we have been notified of the unsafe condition described in the MCAI and service information referenced above. We are proposing this AD because we evaluated all pertinent information and determined an unsafe condition exists and is likely to exist or develop on other products of the same type design.

Costs of Compliance

Based on the service information, we estimate that this proposed AD would affect about 1 product of U.S. registry. We also estimate that it would take about 8 work-hours per product to comply with the basic requirements of this proposed AD. The average labor rate is $85 per work-hour. Required parts would cost about $5,079 per product. Where the service information lists required parts costs that are covered under warranty, we have assumed that there will be no charge for these parts. As we do not control warranty coverage for affected parties, some parties may incur costs higher than estimated here. Based on these figures, we estimate the cost of the proposed AD on U.S. operators to be $5,759.

Authority for This Rulemaking

Title 49 of the United States Code specifies the FAA's authority to issue rules on aviation safety. Subtitle I, section 106, describes the authority of the FAA Administrator. ''Subtitle VII: Aviation Programs,'' describes in more detail the scope of the Agency's authority.

We are issuing this rulemaking under the authority described in ''Subtitle VII, Part A, Subpart III, Section 44701: General requirements.'' Under that section, Congress charges the FAA with promoting safe flight of civil aircraft in air commerce by prescribing regulations for practices, methods, and procedures the Administrator finds necessary for safety in air commerce. This regulation is within the scope of that authority because it addresses an unsafe condition that is likely to exist or develop on products identified in this rulemaking action.

Regulatory Findings

We determined that this proposed AD would not have federalism implications under Executive Order 13132. This proposed AD would not have a substantial direct effect on the States, on the relationship between the national Government and the States, or on the distribution of power and responsibilities among the various levels of government.

For the reasons discussed above, I certify this proposed regulation:

1. Is not a ''significant regulatory action'' under Executive Order 12866;
2. Is not a ''significant rule'' under the DOT Regulatory Policies and Procedures (44 FR 11034, February 26, 1979);
3. Will not affect intrastate aviation in Alaska; and
4. Will not have a significant economic impact, positive or negative, on a substantial number of small entities under the criteria of the Regulatory Flexibility Act.

We prepared a regulatory evaluation of the estimated costs to comply with this proposed AD and placed it in the AD docket.

List of Subjects in 14 CFR Part 39

Air transportation, Aircraft, Aviation safety, Incorporation by reference, Safety.

The Proposed Amendment

Accordingly, under the authority delegated to me by the Administrator, the FAA proposes to amend 14 CFR part 39 as follows:

PART 39—AIRWORTHINESS DIRECTIVES

1. The authority citation for part 39 continues to read as follows:

Authority: 49 U.S.C. 106(g), 40113, 44701.

§ 39.13 [Amended]

2. The FAA amends § 39.13 by adding the following new AD:

BAE SYSTEMS (OPERATIONS) LIMITED: Docket No. FAA–2012–0642; Directorate Identifier 2011–NM–262–AD.

(a) Comments Due Date

We must receive comments by August 6, 2012.

(b) Affected ADs

None.

(c) Applicability

This AD applies to BAE SYSTEMS (OPERATIONS) LIMITED Model BAe 146–100A, –200A, and –300A airplanes, and Model Avro 146–RJ70A, 146–RJ85A, and 146–RJ100A airplanes; certificated in any category except for airplanes operating in a cargo configuration. The requirements of this AD become applicable at the time an airplane operating in a cargo configuration is converted to a passenger configuration.

(d) Subject

Air Transport Association (ATA) of America Code 29, Hydraulic power.

(e) Reason

This AD was prompted by hydraulic pipe ruptures in the center of the cabin resulting in passengers being contaminated with hydraulic fluid. We are issuing this AD to prevent harmful or hazardous concentrations of hydraulic fluid or hydraulic vapor from entering the passenger compartment, possibly resulting in injury to the passengers.

(f) Compliance

You are responsible for having the actions required by this AD performed within the compliance times specified, unless the actions have already been done.

(g) Actions

Within 4,000 flight hours or 24 months after the effective date of this AD, whichever occurs first, install the hydraulic fluid containment system, in accordance with the Accomplishment Instructions of BAE SYSTEMS (OPERATIONS) LIMITED Modification Service Bulletin SB.29–048–30676A, Revision 2, dated December 23, 2010.

(h) Credit for Previous Actions

This paragraph provides credit for the actions required by paragraph (g) of this AD, if those actions were performed before the effective date of this AD, using the service bulletin specified in paragraph (h)(1) or (h)(2) of this AD.

(1) BAE SYSTEMS (OPERATIONS) LIMITED Modification Service Bulletin SB.29–048–30676A, dated October 18, 2010.

(2) BAE SYSTEMS (OPERATIONS) LIMITED Modification Service Bulletin SB.29–048–30676A, Revision 1, dated November 5, 2010.

(i) Other FAA AD Provisions

The following provisions also apply to this AD:

(1) *Alternative Methods of Compliance (AMOCs):* The Manager, International Branch, ANM–116, FAA, has the authority to approve AMOCs for this AD, if requested using the procedures found in 14 CFR 39.19. In accordance with 14 CFR 39.19, send your request to your principal inspector or local Flight Standards District Office, as appropriate. If sending information directly to the International Branch, send it to ATTN: Todd Thompson, Aerospace Engineer, International Branch, ANM–116, Transport Airplane Directorate, FAA, 1601 Lind Avenue SW., Renton, Washington 98057–3356; telephone (425) 227–1175; fax (425) 227–1149. Information may be emailed to: *9-ANM-116-AMOC-REQUESTS@faa.gov.* Before using any approved AMOC, notify your appropriate principal inspector, or lacking a principal inspector, the manager of the local flight standards district office/certificate holding district office. The AMOC approval letter must specifically reference this AD.

(2) *Airworthy Product:* For any requirement in this AD to obtain corrective actions from a manufacturer or other source, use these actions if they are FAA-approved. Corrective actions are considered FAA-approved if they are approved by the State of Design Authority (or their delegated agent). You are required to assure the product is airworthy before it is returned to service.

(j) Related Information

(1) Refer to MCAI European Aviation Safety Agency (EASA) Airworthiness Directive 2011–0220, dated November 11, 2011; and BAE SYSTEMS (OPERATIONS) LIMITED Modification Service Bulletin SB.29–048–30676A, Revision 2, dated December 23, 2010; for related information.

(2) For service information identified in this AD, contact BAE SYSTEMS (OPERATIONS) LIMITED, Customer Information Department, Prestwick International Airport, Ayrshire, KA9 2RW, Scotland, United Kingdom; telephone +44 1292 675207; fax +44 1292 675704; email *RApublications@baesystems.com;* Internet *http://www.baesystems.com/Businesses/RegionalAircraft/index.htm.* You may review copies of the referenced service information at the FAA, Transport Airplane Directorate, 1601 Lind Avenue SW., Renton, Washington. For information on the availability of this material at the FAA, call 425–227–1221.

Issued in Renton, Washington, on June 12, 2012.

Kalene C. Yanamura,

Acting Manager, Transport Airplane Directorate, Aircraft Certification Service.

[FR Doc. 2012–15168 Filed 6–20–12; 8:45 am]

BILLING CODE 4910–13–P

DEPARTMENT OF TRANSPORTATION

Federal Aviation Administration

14 CFR Part 39

[Docket No. FAA–2012–0641; Directorate Identifier 2011–NM–258–AD]

RIN 2120–AA64

Airworthiness Directives; Bombardier, Inc. Airplanes

AGENCY: Federal Aviation Administration (FAA), DOT.

ACTION: Notice of proposed rulemaking (NPRM).

SUMMARY: We propose to adopt a new airworthiness directive (AD) for certain Bombardier, Inc. Model CL–600–2A12 (CL–601) and CL–600–2B16 (CL–601–3A, CL–601–3R, and CL–604 Variants) airplanes. This proposed AD was prompted by reports of jamming/malfunctioning of the left-hand engine thrust control mechanism. This proposed AD would require modifying the left-hand engine upper core-cowl. We are proposing this AD to prevent jamming/malfunctioning of the left-hand engine thrust control mechanism, which could lead to loss of control of the airplane.

DATES: We must receive comments on this proposed AD by August 6, 2012.

ADDRESSES: You may send comments by any of the following methods:

- *Federal eRulemaking Portal:* Go to *http://www.regulations.gov.* Follow the instructions for submitting comments.
- *Fax:* (202) 493–2251.
- *Mail:* U.S. Department of Transportation, Docket Operations, M–30, West Building Ground Floor, Room W12–140, 1200 New Jersey Avenue SE., Washington, DC 20590.
- *Hand Delivery:* U.S. Department of Transportation, Docket Operations, M–30, West Building Ground Floor, Room W12–140, 1200 New Jersey Avenue SE., Washington, DC, between 9 a.m. and 5 p.m., Monday through Friday, except Federal holidays.

For service information identified in this proposed AD, contact Bombardier, Inc., 400 Côte-Vertu Road West, Dorval, Québec H4S 1Y9, Canada; telephone 514–855–5000; fax 514–855–7401; email *thd.crj@aero.bombardier.com;* Internet *http://www.bombardier.com.* You may review copies of the referenced service information at the FAA, Transport Airplane Directorate, 1601 Lind Avenue SW., Renton, Washington. For information on the availability of this material at the FAA, call 425–227–1221.

Examining the AD Docket

You may examine the AD docket on the Internet at *http://www.regulations.gov;* or in person at the Docket Operations office between 9 a.m. and 5 p.m., Monday through Friday, except Federal holidays. The AD docket contains this proposed AD, the regulatory evaluation, any comments received, and other information. The street address for the Docket Operations office (telephone (800) 647–5527) is in the **ADDRESSES** section. Comments will be available in the AD docket shortly after receipt.

FOR FURTHER INFORMATION CONTACT: Mazdak Hobbi, Aerospace Engineer, Propulsion and Services Branch, ANE–173, FAA, New York Aircraft Certification Office, 1600 Stewart Avenue, Westbury, NY 11590; telephone (516) 228–7330; fax (516) 794–5531.

SUPPLEMENTARY INFORMATION:

Comments Invited

We invite you to send any written relevant data, views, or arguments about this proposed AD. Send your comments to an address listed under the **ADDRESSES** section. Include ''Docket No. FAA–2012–0641; Directorate Identifier 2011–NM–258–AD'' at the beginning of your comments. We specifically invite comments on the overall regulatory, economic, environmental, and energy

aspects of this proposed AD. We will consider all comments received by the closing date and may amend this proposed AD based on those comments.

We will post all comments we receive, without change, to *http://www.regulations.gov,* including any personal information you provide. We will also post a report summarizing each substantive verbal contact we receive about this proposed AD.

Discussion

Transport Canada Civil Aviation, which is the aviation authority for Canada, has issued Canadian Airworthiness Directive CF–2011–37, dated October 19, 2011 (referred to after this as ''the MCAI''), to correct an unsafe condition for the specified products. The MCAI states:

There have been several reported incidents of jamming/malfunctioning of the left hand (L/H) engine thrust control mechanism on the affected aeroplanes. The investigation has shown that an improperly stowed or dislodged upper core-cowl-door Hold Open Rod, can impede a Fuel Control Unit (FCU) function by obstructing the movement of the FCU actuating lever arm, hence rendering the L/H engine thrust control inoperable.

Due to the engine's orientation, the subject FCU fouling is limited only to the L/H engine installation on the affected twin engine powered aeroplanes; however the potential hazard of any in-flight engine shut down caused by jammed engine fuel control lever is a safety concern that warrants mitigating action.

In order to help alleviate the possibility of an in-flight engine shut down due to the subject fouling of the FCU lever by the core-cowl-door Hold Open Rod, Bombardier has issued three Service Bulletins to [modify the L/H engine upper core cowl by] install[ing] a new bracket at the L/H engine upper core-cowl-door location. This [Canadian] directive is issued to mandate the incorporation of the Service Bulletins 604–71–005, 601–0609 or 605–71–002, as applicable on the affected aeroplanes.

You may obtain further information by examining the MCAI in the AD docket.

Relevant Service Information

Bombardier, Inc. has issued the following service bulletins:

- Bombardier Service Bulletin 601–0609, dated August 31, 2011 (for Model CL–600–2A12 airplanes)
- Bombardier Service Bulletin 604–71–005, dated July 18, 2011 (for Model CL–600–2B16 airplanes)
- Bombardier Service Bulletin 605–71–002, dated July 18, 2011 (for Model CL–600–2B16 airplanes).

The actions described in this service information are intended to correct the unsafe condition identified in the MCAI.

FAA's Determination and Requirements of This Proposed AD

This product has been approved by the aviation authority of another country, and is approved for operation in the United States. Pursuant to our bilateral agreement with the State of Design Authority, we have been notified of the unsafe condition described in the MCAI and service information referenced above. We are proposing this AD because we evaluated all pertinent information and determined an unsafe condition exists and is likely to exist or develop on other products of the same type design.

Costs of Compliance

Based on the service information, we estimate that this proposed AD would affect about 407 products of U.S. registry. We also estimate that it would take about 3 work-hours per product to comply with the basic requirements of this proposed AD. The average labor rate is $85 per work-hour. Required parts would cost about $203 per product. Where the service information lists required parts costs that are covered under warranty, we have assumed that there will be no charge for these parts. As we do not control warranty coverage for affected parties, some parties may incur costs higher than estimated here. Based on these figures, we estimate the cost of the proposed AD on U.S. operators to be $186,406, or $458 per product.

Authority for This Rulemaking

Title 49 of the United States Code specifies the FAA's authority to issue rules on aviation safety. Subtitle I, section 106, describes the authority of the FAA Administrator. ''Subtitle VII: Aviation Programs,'' describes in more detail the scope of the Agency's authority.

We are issuing this rulemaking under the authority described in ''Subtitle VII, Part A, Subpart III, Section 44701: General requirements.'' Under that section, Congress charges the FAA with promoting safe flight of civil aircraft in air commerce by prescribing regulations for practices, methods, and procedures the Administrator finds necessary for safety in air commerce. This regulation is within the scope of that authority because it addresses an unsafe condition that is likely to exist or develop on products identified in this rulemaking action.

Regulatory Findings

We determined that this proposed AD would not have federalism implications under Executive Order 13132. This proposed AD would not have a substantial direct effect on the States, on the relationship between the national Government and the States, or on the distribution of power and responsibilities among the various levels of government.

For the reasons discussed above, I certify this proposed regulation:

1. Is not a ''significant regulatory action'' under Executive Order 12866;
2. Is not a ''significant rule'' under the DOT Regulatory Policies and Procedures (44 FR 11034, February 26, 1979);
3. Will not affect intrastate aviation in Alaska; and
4. Will not have a significant economic impact, positive or negative, on a substantial number of small entities under the criteria of the Regulatory Flexibility Act.

We prepared a regulatory evaluation of the estimated costs to comply with this proposed AD and placed it in the AD docket.

List of Subjects in 14 CFR Part 39

Air transportation, Aircraft, Aviation safety, Incorporation by reference, Safety.

The Proposed Amendment

Accordingly, under the authority delegated to me by the Administrator, the FAA proposes to amend 14 CFR part 39 as follows:

PART 39—AIRWORTHINESS DIRECTIVES

1. The authority citation for part 39 continues to read as follows:

Authority: 49 U.S.C. 106(g), 40113, 44701.

§ 39.13 [Amended]

2. The FAA amends § 39.13 by adding the following new AD:

Bombardier, Inc.: Docket No. FAA–2012–0641; Directorate Identifier 2011–NM–258–AD.

(a) Comments Due Date

We must receive comments by August 6, 2012.

(b) Affected ADs

None.

(c) Applicability

This AD applies to Bombardier, Inc. airplanes identified in paragraphs (c)(1) and (c)(2) of this AD, certificated in any category:

(1) Bombardier, Inc. Model CL–600–2A12 (CL–601) airplanes, serial numbers (S/Ns) 3001 through 3066 inclusive.

(2) Bombardier, Inc. Model CL–600–2B16 (CL–601–3A, CL–601–3R, and CL–604 Variants) airplanes, S/Ns 5001 through 5194 inclusive, 5301 through 5665 inclusive, and 5701 through 5884 inclusive.

(d) Subject

Air Transport Association (ATA) of America Code 71: Powerplant.

(e) Reason

This AD was prompted by reports of jamming/malfunctioning of the left-hand engine thrust control mechanism. We are issuing this AD to prevent jamming/malfunctioning of the left-hand engine thrust control mechanism, which could lead to loss of control of the airplane.

(f) Compliance

You are responsible for having the actions required by this AD performed within the compliance times specified, unless the actions have already been done.

(g) Modification

Within 36 months or 6,000 flight hours, whichever occurs first after the effective date of this AD: Modify the left-hand engine upper core-cowl, in accordance with the Accomplishment Instructions of the applicable service bulletin specified in paragraph (g)(1), (g)(2), or (g)(3) of this AD.

(1) Bombardier Service Bulletin 601–0609, dated August 31, 2011 (for Model CL–600–2A12 airplanes having S/Ns 3001 through 3066 inclusive, and Model CL–600–2B16 airplanes having S/Ns 5001 through 5194 inclusive).

(2) Bombardier Service Bulletin 604–71–005, dated July 18, 2011 (for Model CL–600–2B16 airplanes having S/Ns 5301 through 5665 inclusive).

(3) Bombardier Service Bulletin 605–71–002, dated July 18, 2011 (for Model CL–600–2B16 airplanes having S/Ns 5701 through 5884 inclusive).

(h) Other FAA AD Provisions

The following provisions also apply to this AD:

(1) *Alternative Methods of Compliance (AMOCs):* The Manager, New York Aircraft Certification Office (ACO), ANE–170, FAA, has the authority to approve AMOCs for this AD, if requested using the procedures found in 14 CFR 39.19. In accordance with 14 CFR 39.19, send your request to your principal inspector or local Flight Standards District Office, as appropriate. If sending information directly to the New York ACO, send it to ATTN: Program Manager, Continuing Operational Safety, FAA, New York ACO, 1600 Stewart Avenue, Suite 410, Westbury, New York 11590; telephone 516–228–7300; fax 516–794–5531. Before using any approved AMOC, notify your appropriate principal inspector, or lacking a principal inspector, the manager of the local flight standards district office/certificate holding district office. The AMOC approval letter must specifically reference this AD.

(2) *Airworthy Product:* For any requirement in this AD to obtain corrective actions from a manufacturer or other source, use these actions if they are FAA-approved. Corrective actions are considered FAA-approved if they are approved by the State of Design Authority (or their delegated agent). You are required to assure the product is airworthy before it is returned to service.

(i) Related Information

Refer to MCAI Canadian Airworthiness Directive CF–2011–37, dated October 19, 2011, and the service bulletins specified in paragraphs (i)(1), (i)(2), and (i)(3) of this AD, for related information.

(1) Bombardier Service Bulletin 601–0609, dated August 31, 2011.

(2) Bombardier Service Bulletin 604–71–005, dated July 18, 2011.

(3) Bombardier Service Bulletin 605–71–002, dated July 18, 2011.

Issued in Renton, Washington, on June 12, 2012.

Kalene C. Yanamura,

Acting Manager, Transport Airplane Directorate, Aircraft Certification Service.

[FR Doc. 2012–15167 Filed 6–20–12; 8:45 am]

BILLING CODE 4910–13–P

DEPARTMENT OF TRANSPORTATION

Federal Aviation Administration

14 CFR Part 39

[Docket No. FAA–2012–0640; Directorate Identifier 2011–NM–203–AD]

RIN 2120–AA64

Airworthiness Directives; Airbus Airplanes

AGENCY: Federal Aviation Administration (FAA), DOT.

ACTION: Notice of proposed rulemaking (NPRM).

SUMMARY: We propose to adopt a new airworthiness directive (AD) for certain Airbus Model A330–243, –243F, –341, –342, and –343 airplanes equipped with Rolls-Royce Trent 700 engines. This proposed AD was prompted by reports of extensive damage to engine air intake cowls as a result of acoustic panel collapse. This proposed AD would require repetitive inspections of the three inner acoustic panels of both engine air intake cowls to detect disbonding, and corrective actions if necessary. We are proposing this AD to detect and correct disbonding, which could result in detachment of the engine air intake cowl from the engine leading to ingestion of parts, which could cause failure of the engine, and consequent reduced controllability of the airplane.

DATES: We must receive comments on this proposed AD by August 6, 2012.

ADDRESSES: You may send comments by any of the following methods:

- *Federal eRulemaking Portal:* Go to *http://www.regulations.gov.* Follow the instructions for submitting comments.
- *Fax:* (202) 493–2251.
- *Mail:* U.S. Department of Transportation, Docket Operations, M–30, West Building Ground Floor, Room W12–140, 1200 New Jersey Avenue SE., Washington, DC 20590.
- *Hand Delivery:* U.S. Department of Transportation, Docket Operations, M–30, West Building Ground Floor, Room W12–140, 1200 New Jersey Avenue SE., Washington, DC, between 9 a.m. and 5 p.m., Monday through Friday, except Federal holidays.

For service information identified in this proposed AD, contact Airbus SAS—Airworthiness Office—EAL, 1 Rond Point Maurice Bellonte, 31707 Blagnac Cedex, France; telephone +33 5 61 93 36 96; fax +33 5 61 93 45 80; email *airworthiness.A330–A340@airbus.com*; Internet *http://www.airbus.com.* For Rolls-Royce service information identified in this proposed AD, contact Rolls-Royce plc, P.O. Box 31, Derby, DE24 8BJ, England; telephone 011 44 1332 242424; fax 011 44 1332 249936; Internet *https://www.aeromanager.com.* You may review copies of the referenced service information at the FAA, Transport Airplane Directorate, 1601 Lind Avenue SW., Renton, Washington. For information on the availability of this material at the FAA, call 425–227–1221.

Examining the AD Docket

You may examine the AD docket on the Internet at *http://www.regulations.gov;* or in person at the Docket Operations office between 9 a.m. and 5 p.m., Monday through Friday, except Federal holidays. The AD docket contains this proposed AD, the regulatory evaluation, any comments received, and other information. The street address for the Docket Operations office (telephone (800) 647–5527) is in the **ADDRESSES** section. Comments will be available in the AD docket shortly after receipt.

FOR FURTHER INFORMATION CONTACT: Vladimir Ulyanov, Aerospace Engineer, International Branch, ANM–116, Transport Airplane Directorate, FAA, 1601 Lind Avenue SW., Renton, Washington 98057–3356; telephone (425) 227–1138; fax (425) 227–1149.

SUPPLEMENTARY INFORMATION:

Comments Invited

We invite you to send any written relevant data, views, or arguments about this proposed AD. Send your comments to an address listed under the **ADDRESSES** section. Include ''Docket No. FAA–2012–0640; Directorate Identifier 2011–NM–203–AD'' at the beginning of your comments. We specifically invite comments on the overall regulatory, economic, environmental, and energy aspects of this proposed AD. We will consider all comments received by the closing date and may amend this proposed AD based on those comments.

We will post all comments we receive, without change, to *http://*

www.regulations.gov, including any personal information you provide. We will also post a report summarizing each substantive verbal contact we receive about this proposed AD.

Discussion

The European Aviation Safety Agency (EASA), which is the Technical Agent for the Member States of the European Community, has issued EASA Airworthiness Directive 2011–0173, dated September 13, 2011 (referred to after this as ''the MCAI''), to correct an unsafe condition for the specified products. The MCAI states:

Two operators of A330 aeroplanes fitted with Rolls-Royce Trent 700 engines reported finding extensive damage to engine air intake cowls as a result of acoustic panel collapse, most probably caused by panel disbonding.

This condition, if not detected and corrected, could lead to the detachment of the engine air intake cowl from the engine, possibly resulting in ingestion of parts by, and consequence damage to, the engine, or injury to persons on the ground.

For the reasons described above, this [EASA] AD requires repetitive special detailed inspections (tap tests) of the 3 inner acoustic panels of both engine air intake cowls to detect any disbonding and, depending on findings, applicable corrective actions.

The unsafe condition is detachment of the engine air intake cowl from the engine, which could result in ingestion of parts causing failure of the engine, and consequent reduced controllability of the airplane. Corrective actions include repair or replacement of the affected engine air intake cowl. The compliance time for replacing an engine air intake cowl that is damaged beyond certain damage limits is before further flight. For damage that is below certain specified damage limits, the compliance time for repetitive inspections is between 10 flight cycles and 267 flight cycles, or the affected unit is specified to be repaired before further flight. You may obtain further information by examining the MCAI in the AD docket.

Relevant Service Information

Airbus has issued Mandatory Service Bulletin A330–71–3024, Revision 01, dated September 27, 2011. The actions described in this service information are intended to correct the unsafe condition identified in the MCAI.

Rolls-Royce plc has issued Alert Service Bulletin RB. 211–71–AG419, including Appendix 1, dated May 10, 2011.

FAA's Determination and Requirements of This Proposed AD

This product has been approved by the aviation authority of another country, and is approved for operation in the United States. Pursuant to our bilateral agreement with the State of Design Authority, we have been notified of the unsafe condition described in the MCAI and service information referenced above. We are proposing this AD because we evaluated all pertinent information and determined an unsafe condition exists and is likely to exist or develop on other products of the same type design.

Costs of Compliance

Based on the service information, we estimate that this proposed AD would affect about 22 products of U.S. registry. We also estimate that it would take about 20 work-hours per product to comply with the basic requirements of this proposed AD. The average labor rate is $85 per work-hour. Based on these figures, we estimate the cost of the proposed AD on U.S. operators to be $37,400, or $1,700 per product.

In addition, we estimate that any necessary follow-on actions would take up to 34 work-hours for a cost of up to $2,890 per product. We have received no definitive data that would enable us to provide parts cost estimates for the on-condition actions specified in this proposed AD. We have no way of determining the number of products that may need these actions.

Authority for This Rulemaking

Title 49 of the United States Code specifies the FAA's authority to issue rules on aviation safety. Subtitle I, section 106, describes the authority of the FAA Administrator. ''Subtitle VII: Aviation Programs,'' describes in more detail the scope of the Agency's authority.

We are issuing this rulemaking under the authority described in ''Subtitle VII, Part A, Subpart III, Section 44701: General requirements.'' Under that section, Congress charges the FAA with promoting safe flight of civil aircraft in air commerce by prescribing regulations for practices, methods, and procedures the Administrator finds necessary for safety in air commerce. This regulation is within the scope of that authority because it addresses an unsafe condition that is likely to exist or develop on products identified in this rulemaking action.

Regulatory Findings

We determined that this proposed AD would not have federalism implications under Executive Order 13132. This proposed AD would not have a substantial direct effect on the States, on the relationship between the national Government and the States, or on the distribution of power and responsibilities among the various levels of government.

For the reasons discussed above, I certify this proposed regulation:

1. Is not a ''significant regulatory action'' under Executive Order 12866;
2. Is not a ''significant rule'' under the DOT Regulatory Policies and Procedures (44 FR 11034, February 26, 1979);
3. Will not affect intrastate aviation in Alaska; and
4. Will not have a significant economic impact, positive or negative, on a substantial number of small entities under the criteria of the Regulatory Flexibility Act.

We prepared a regulatory evaluation of the estimated costs to comply with this proposed AD and placed it in the AD docket.

List of Subjects in 14 CFR Part 39

Air transportation, Aircraft, Aviation safety, Incorporation by reference, Safety.

The Proposed Amendment

Accordingly, under the authority delegated to me by the Administrator, the FAA proposes to amend 14 CFR part 39 as follows:

PART 39—AIRWORTHINESS DIRECTIVES

1. The authority citation for part 39 continues to read as follows:

Authority: 49 U.S.C. 106(g), 40113, 44701.

§ 39.13 [Amended]

2. The FAA amends § 39.13 by adding the following new AD:

Airbus: Docket No. FAA–2012–0640; Directorate Identifier 2011–NM–203–AD.

(a) Comments Due Date

We must receive comments by August 6, 2012.

(b) Affected ADs

None.

(c) Applicability

This AD applies to Airbus Model A330–243, –243F, –341, –342, and –343 airplanes; certificated in any category; all manufacturer serial numbers; equipped with Rolls-Royce Trent 700 engines.

(d) Subject

Air Transport Association (ATA) of America Code 71, Powerplant.

(e) Reason

This AD was prompted by reports of extensive damage to engine air intake cowls as a result of acoustic panel collapse. We are issuing this AD detect and correct disbonding, which could result in detachment of the engine air intake cowl from the engine leading to ingestion of parts,

which could cause failure of the engine, and consequent reduced controllability of the airplane.

(f) Compliance

You are responsible for having the actions required by this AD performed within the compliance times specified, unless the actions have already been done.

(g) Repetitive Detailed Inspection

At the applicable compliance time specified in paragraphs (g)(1) and (g)(2) of this AD: Do a tap test inspection of the three inner acoustic panels of each engine air intake cowl for disbonding, in accordance with the Accomplishment Instructions of Airbus Mandatory Service Bulletin A330–71–3024, Revision 01, dated September 27, 2011. Repeat the inspection thereafter at intervals not to exceed 24 months, except as required by paragraphs (h) and (i) of this AD.

(1) For an engine air intake cowl that has accumulated less than 5,000 total flight cycles or less than 20,000 total flight hours, whichever occurs first, since its first installation on an airplane as of the effective date of this AD: Within 24 months after the engine air intake cowl has accumulated 5,000 total flight cycles or 20,000 total flight hours, whichever occurs first, since its first installation on an airplane.

(2) For an engine air intake cowl that has accumulated 5,000 or more total flight cycles or 20,000 or more total flight hours, whichever occurs first, since its first installation on an airplane as of the effective date of this AD: Within 24 months after the effective date of this AD.

(h) Inspection of Replaced Engine Intake Cowl

For airplanes on which an engine air intake cowl is replaced after the effective date of this AD, at the applicable compliance time specified in paragraph (h)(1) or (h)(2) of this AD: Do a tap test inspection for disbonding of the three inner acoustic panels of the affected engine air intake cowl for disbonding, in accordance with the Accomplishment Instructions of Airbus Mandatory Service Bulletin A330–71–3024, Revision 01, dated September 27, 2011. Repeat the inspection thereafter at intervals not to exceed 24 months.

(1) Within 24 months after the engine air intake cowl accumulates 5,000 total flight cycles or 20,000 total flight hours, whichever occurs first, since its first installation on any airplane, except as required by paragraph (h)(2) of this AD.

(2) Before installation, if an engine air intake cowl has accumulated 5,000 or more total flight cycles or 20,000 or more total flight hours, whichever occurs first, since its first installation on any airplane, and which has not been inspected in accordance with the Accomplishment Instructions of Airbus Mandatory Service Bulletin A330–71–3024, Revision 01, dated September 27, 2011, within the preceding 24 months.

(i) Corrective Actions

(1) If any disbonding is found during any inspection required by this AD, and the findings are within the permitted allowable damage limit (ADL) specified in Rolls-Royce Alert Service Bulletin RB. 211–71–AG419, including Appendix 1, dated May 10, 2011: Do the actions specified in paragraph (i)(1)(i), (i)(1)(ii), or (i)(1)(iii) of this AD.

(i) Repeat the tap test inspection required by paragraph (g) of this AD at the applicable inspection interval specified in Rolls-Royce Alert Service Bulletin RB. 211–71–AG419, including Appendix 1, dated May 10, 2011, until the actions required by paragraph (i)(1)(ii) or (i)(1)(iii) are accomplished.

(ii) Repair the affected engine air intake cowl before further flight, in accordance with the Accomplishment Instructions of Rolls-Royce Alert Service Bulletin RB. 211–71–AG419, including Appendix 1, dated May 10, 2011. Repeat the inspection specified in paragraph (g) of this AD thereafter at the applicable compliance time specified in paragraph (g) of this AD.

(iii) Replace the affected engine air intake cowl before further flight, in accordance with the Accomplishment Instructions of Rolls-Royce Alert Service Bulletin RB. 211–71–AG419, including Appendix 1, dated May 10, 2011. Repeat the inspection specified in paragraph (g) of this AD thereafter at the applicable compliance time specified in paragraph (g) of this AD.

(2) If any disbonding is found during any inspection required by this AD, and the findings are not within the permitted ADL specified in Rolls-Royce Alert Service Bulletin RB. 211–71–AG419, including Appendix 1, dated May 10, 2011: Before further flight, replace the affected engine air intake cowl, in accordance with the Accomplishment Instructions of Rolls-Royce Alert Service Bulletin RB. 211–71–AG419, including Appendix 1, dated May 10, 2011. Repeat the inspection specified in paragraph (g) of this AD thereafter at the applicable compliance time specified in paragraph (g) of this AD.

(j) Other FAA AD Provisions

The following provisions also apply to this AD:

(1) *Alternative Methods of Compliance (AMOCs):* The Manager, International Branch, ANM–116, Transport Airplane Directorate, FAA, has the authority to approve AMOCs for this AD, if requested using the procedures found in 14 CFR 39.19. In accordance with 14 CFR 39.19, send your request to your principal inspector or local Flight Standards District Office, as appropriate. If sending information directly to the International Branch, send it to ATTN: Vladimir Ulyanov, Aerospace Engineer, International Branch, ANM–116, Transport Airplane Directorate, FAA, 1601 Lind Avenue SW., Renton, Washington 98057–3356; telephone (425) 227–1138; fax (425) 227-1149. Information may be emailed to: *9-ANM-116-AMOC-REQUESTS@faa.gov.* Before using any approved AMOC, notify your appropriate principal inspector, or lacking a principal inspector, the manager of the local flight standards district office/certificate holding district office. The AMOC approval letter must specifically reference this AD.

(2) *Airworthy Product:* For any requirement in this AD to obtain corrective actions from a manufacturer or other source, use these actions if they are FAA-approved. Corrective actions are considered FAA-approved if they are approved by the State of Design Authority (or their delegated agent). You are required to assure the product is airworthy before it is returned to service.

(k) Related Information

(1) Refer to MCAI European Aviation Safety Agency, Airworthiness Directive 2011–0173, dated September 13, 2011, and the following service information for related information.

(i) Airbus Mandatory Service Bulletin A330–71–3024, Revision 01, dated September 27, 2011.

(ii) Rolls-Royce Alert Service Bulletin RB. 211–71–AG419, including Appendix 1, dated May 10, 2011.

(2) For Airbus service information identified in this AD, contact Airbus SAS—Airworthiness Office—EAL, 1 Rond Point Maurice Bellonte, 31707 Blagnac Cedex, France; telephone +33 5 61 93 36 96; fax +33 5 61 93 45 80; email *airworthiness.A330-A340@airbus.com;* Internet *http://www.airbus.com.* For Rolls-Royce service information identified in this AD, contact Rolls-Royce plc, P.O. Box 31, Derby, DE24 8BJ, England; telephone 011 44 1332 242424; fax 011 44 1332 249936; Internet *https://www.aeromanager.com.* You may review copies of the referenced service information at the FAA, Transport Airplane Directorate, 1601 Lind Avenue SW., Renton, Washington. For information on the availability of this material at the FAA, call 425–227–1221.

Issued in Renton, Washington, on June 12, 2012.

Kalene C. Yanamura,

Acting Manager, Transport Airplane Directorate, Aircraft Certification Service.

[FR Doc. 2012–15175 Filed 6–20–12; 8:45 am]

BILLING CODE 4910–13–P

DEPARTMENT OF STATE

22 CFR Parts 120, 121, 123, 124, 125, 126, 127, 128, 129, and 130

[Public Notice: [7927]]

Export Control Reform Transition Plan

AGENCY: Department of State.

ACTION: Proposed policy statement, request for comments.

SUMMARY: As part of the President's export control reform initiative, the Directorate of Defense Trade Controls (DDTC) seeks public comment on the proposed implementation plan for defense articles and defense services that will transition from the jurisdiction of the Department of State to the Department of Commerce. The intent of this plan is to provide a clear description of DDTC's proposed policies and procedures for the transition of items to the jurisdiction of the Department of Commerce. The revisions

to this rule are part of the Department of State's retrospective plan under E.O. 13563 completed on August 17, 2011. The Department of State's full plan can be accessed at *http://www.state.gov/documents/organization/181028.pdf.*

DATES: The Department of State will accept comments on this proposed policy statement until August 6, 2012.

ADDRESSES: Interested parties may submit comments within 45 days of the date of publication by one of the following methods:

- *Email: DDTCResponseTeam@state.gov* with the subject line, ''ECR Transition Guidance.''
- *Internet:* At *www.regulations.gov*, search for this notice by using this notice's docket number, DOS–2012–0020.

Comments received after that date will be considered if feasible, but consideration cannot be assured. Those submitting comments should not include any personally identifying information they do not desire to be made public or information for which a claim of confidentiality is asserted because those comments and/or transmittal emails will be made available for public inspection and copying after the close of the comment period via the Directorate of Defense Trade Controls Web site at *www.pmddtc.state.gov.* Parties who wish to comment anonymously may do so by submitting their comments via *www.regulations.gov*, leaving the fields that would identify the commenter blank and including no identifying information in the comment itself. Comments submitted via *www.regulations.gov* are immediately available for public inspection.

FOR FURTHER INFORMATION CONTACT: Ms. Candace M. J. Goforth, Director, Office of Defense Trade Controls Policy, U.S. Department of State, telephone (202) 663–2792, or email *DDTCResponseTeam@state.gov.* ATTN: ECR Transition Guidance.

SUPPLEMENTARY INFORMATION: The Directorate of Defense Trade Controls (DDTC), U.S. Department of State, administers the International Traffic in Arms Regulations (ITAR) (22 CFR parts 120–130). The items subject to the jurisdiction of the ITAR, i.e., ''defense articles,'' are identified on the ITAR's U.S. Munitions List (USML) (22 CFR 121.1). With few exceptions, items not subject to the export control jurisdiction of the ITAR are subject to the jurisdiction of the Export Administration Regulations (''EAR,'' 15 CFR parts 730–774, which includes the Commerce Control List (CCL) in Supplement No. 1 to part 774), administered by the Bureau of Industry and Security (BIS), U.S. Department of Commerce. Both the ITAR and the EAR impose license requirements on exports and reexports. Items not subject to the ITAR or to the exclusive licensing jurisdiction of any other set of regulations are subject to the EAR.

Transition Plan

The Departments of State and Commerce described in their respective Advanced Notices of Proposed Rulemaking (ANPRM) in December 2010 the Administration's plan to make the USML and the CCL positive, tiered, and aligned so that eventually they can be combined into a single control list (see ''Commerce Control List: Revising Descriptions of Items and Foreign Availability,'' 75 FR 76664 (December 9, 2010) and ''Revision to the United States Munitions List,'' 75 FR 76935 (December 10, 2010)). Since that time, DDTC has published proposed revisions to several USML Categories, which, when implemented, will transition a significant number of items to the jurisdiction of the Department of Commerce.

Because an immediate effective date would impose undue compliance burden on the defense industry, DDTC has developed the following phased implementation plan for items that will transition from the USML to the CCL, and will become effective for those items upon publication of each revised USML category. This phased implementation plan is designed to mitigate the impact on U.S. license holders, while assuring that all defense trade that should be licensed remains so. Under the plan U.S. license holders will continue to use their approved licenses at the time the transition takes place.

Licenses (DSP–5, DSP–61, and DSP–73)

Licenses for items transitioning to the CCL that are issued in the period prior to the date of final rule publication for each revised USML category will remain valid until expired, returned by the license holder, a license amendment is required, or for a period of two years from the effective date, whichever occurs first. Any limitation, proviso or other requirement imposed on the DDTC authorization will remain in effect. The Department of Commerce may be consulted regarding the applicability of the EAR to the subject commodity.

License applications for items transitioning to the CCL that are received by DDTC prior to final rule publication for each revised USML category will be adjudicated up until the effective date of the rule, unless the applicant requests that the application be Returned Without Action.

License applications received by DDTC within the 45 days following the final rule's publication, but before the rule becomes effective, will be adjudicated only when the applicant provides a written statement certifying that the export or temporary import will be completed within 45 days after the effective date of the final rule. License applications that do not contain this certification will be Returned Without Action. The validity period for licenses issued in this timeframe will be limited to the date 45 days after the effective date of the final rule.

License amendment requests (i.e., DSP–6, DSP–62, and DSP–74) received by DDTC within the 45 days following the final rule's publication, but before the rule becomes effective, will be adjudicated only when the applicant provides a written statement certifying that the export or temporary import will be completed within 45 days after the effective date of the final rule. Amendment requests that do not contain this statement will be Returned Without Action. The validity period for amended licenses issued in this timeframe will be limited to the date 45 days after the effective date of the final rule.

All license requests, including amendments, received after the effective date for items that have transitioned to the CCL will be Returned Without Action with instructions to contact the Department of Commerce.

Technical Assistance Agreements, Manufacturing License Agreements, and Warehouse and Distribution Agreements

Agreements approved prior to the date of relevant final rule publication will remain valid until expired, unless they require an amendment, or for a period of two years from the effective date of the transition, whichever occurs first. Any activity conducted under an agreement will remain subject to all limitations, provisos and other requirements stipulated in the agreement.

Agreement amendments that incorporate items moving to the CCL prior to the date of publication of the final rule will remain valid until expired or for a period of two years from the effective date of the transition, whichever occurs first.

Agreements and amendments received after the final rule is published, but before it becomes effective, will be Returned Without Action if the agreement contains both USML and CCL

items. The agreement holder will be required to amend the agreement to remove all CCL items. Any agreement in which all items are transitioning to the CCL must be terminated and the applicant must seek a new authorization from the Department of Commerce, as applicable.

Agreements and agreement amendments for items moving to the CCL which are received after the effective date will be Returned Without Action with instructions to contact the Department of Commerce.

Reporting Requirements

All reporting requirements for Manufacturing License Agreements under ITAR § 124.9(a)(6) and Warehouse and Distribution Agreements under ITAR § 124.14(c)(6) must be complied with and such reports must be submitted to the Department of State while the agreement is relied upon as an export authorization by the exporter.

Commodity Jurisdiction Determinations

Previously rendered commodity jurisdiction (CJ) determinations for items deemed to be USML, but that are subsequently transitioning to the CCL pursuant to a published final rule, will no longer be valid after the transition date. Exporters are encouraged to review each revised USML category along with its companion CCL category to determine whether their items have transitioned to the jurisdiction of the Department of Commerce. Consistent with the recordkeeping requirements of the ITAR and the EAR, licensees and foreign persons subject to licenses must maintain records reflecting their assessments of the proper regulatory jurisdiction over their items. Licensees who are unable to ascertain the proper jurisdiction of their items may request a CJ determination from DDTC through the current, established procedure.

Licensees who are certain their items have transitioned to the CCL are encouraged to review the appropriate Export Control Classification Number (ECCN) to determine the classification of their item. Licensees who are unsure of the proper ECCN designation may request a Commodity Classification Automated Tracking System (CCATS) determination from the Department of Commerce through the current, established procedure. See 15 CFR 748.3.

Reexport/Retransfer of USML items that have transitioned to the CCL

Following the effective date of transition, foreign persons (i.e., end-users, foreign consignees, and foreign intermediate consignees) who receive, via a Department of State authorization, an item that they are certain has transitioned to the CCL (e.g., confirmed in writing by manufacturer or supplier), should treat the item as such and submit requests for post-transition reexports or retransfers to the Department of Commerce, as may be required by the EAR.

Foreign persons or U.S. persons abroad that have USML items in their inventory at the effective date of transition should review both the USML and the CCL to determine the proper jurisdiction. If doubt exists on jurisdiction of the items, the foreign person should contact the original exporter. If the item is clearly controlled by the Department of Commerce, any reexport or retransfer must comply with the requirements of the EAR.

Regulatory Oversight Responsibilities

For those items transitioning from the USML to the CCL, the Department of Commerce will exercise regulatory oversight, effective on the transition date, for the purposes of licensing and enforcement of exports from the United States where no Department of State authorization is being used. The Department of State will continue to exercise regulatory oversight concerning all Department of State licenses, agreements, and other authorizations, including those where exporters, temporary importers, manufacturers, and brokers continue to use previously issued Department of State licenses and agreements after the effective date of the final rule.

License holders may decide to apply for and use Department of Commerce authorizations for export of the newly transitioned CCL items rather than continue to use previously issued Department of State authorizations. In such cases, license holders must return the Department of State licenses in accordance with ITAR § 123.22, and obtain the required Department of Commerce authorizations.

Violations and Voluntary Disclosures of Possible Violations

Exporters, temporary importers, manufacturers, and brokers are cautioned to closely monitor ITAR and EAR compliance concerning Department of State licenses and agreements for items transitioning from the USML to the CCL.

On the effective date of each rule that adds an item to the CCL that was previously subject to the ITAR, that item will be subject to the EAR. Authorizations issued by DDTC before the transition date may continue to be used as described above by exporters, temporary importers, manufacturers, and brokers. The violation of a previously issued DDTC authorization (including any condition of a DDTC authorization) that is continued in use under the ITAR as described above is a violation of the ITAR.

With respect to a transitioned item, should a possible violation of the ITAR, the EAR, or any license or authorization issued thereunder be discovered, the person or persons involved are strongly encouraged to consult with DDTC or BIS as appropriate, to avail themselves of the current, established procedures for submitting voluntary disclosures and for requesting specific authorization to take any further actions in connection with that item.

License holders and foreign persons must obtain Department of State authorization before disposing, reselling, transshipping, or otherwise transferring any item in their possession that remains on the USML.

Registration

Manufacturers, exporters, and brokers are required to register with the Department of State if their activities involve USML defense articles or defense services.

Registered manufacturers, exporters, temporary importers, defense service providers and brokers (''registrants'') are reminded of the requirement to notify DDTC in writing when they are no longer in the business of manufacturing, exporting, or brokering USML defense articles or defense services. Registrants who determine that all of their activities involve articles or services that will transition from the USML to the CCL and therefore are no longer required to register with the Department of State must provide such written notification. Instructions for providing such notification are accessible on the DDTC Web site (*www.pmddtc.state.gov*). Note that DDTC will not cancel or revoke those registrations, but will allow the registration to expire. Registrants who determine that all of their activities will be subject to Department of Commerce jurisdiction as a result of the transition from the USML to the CCL must nevertheless maintain registration with the Department of State until the effective date of the transition.

Registrants who determine they will no longer be required to register with the Department of State after the effective date of transition, and who have registration renewal dates that occur after publication of the final rule but before its effective date, may request to have their registration expiration date extended to the effective date of transition and not be charged a

registration fee. In those cases, registrants must insert the following statement as the first paragraph in the written notification previously mentioned: *''(insert company name) requests DDTC extend our registration expiration date to the effective date of transition to CCL for USML Category (insert Category number) items and waive the registration fee. (insert company name) certifies that no changes in our eligibility from what is represented in our previously submitted DS–2032 Statement of Registration has occurred (otherwise specify change in eligibility status).* Registrants that avail themselves of the opportunity to continue using previously issued Department of State authorizations (licenses and agreements) for items that have transitioned to the CCL must maintain current registration with the Department of State, which includes payment of registration fees.

Request for Comments

DDTC requests public consideration and comment on the preceding transition plan, taking into account the following specific questions:

1. Is the transition plan clear and understandable? Is it logical?

2. Does the plan adequately address all regulated scenarios?

3. Will industry compliance with existing export control law be negatively affected by this plan?

4. Recognizing that this regulatory transition will unavoidably create challenges for industry, does the plan as presented effectively minimize these challenges?

5. Does the plan impose undue burden on industry, and if so, are there any suggestions that will help mitigate them?

Dated: June 14, 2012.

Rose E. Gottemoeller,

Acting Under Secretary, Arms Control and International Security, Department of State.

[FR Doc. 2012–15070 Filed 6–20–12; 8:45 am]

BILLING CODE 4710–25–P

DEPARTMENT OF THE TREASURY

Internal Revenue Service

26 CFR Part 1

[REG–113738–12]

RIN 1545–BK94

Amendment of Prohibited Payment Option Under Single-Employer Defined Benefit Plan of Plan Sponsor in Bankruptcy

AGENCY: Internal Revenue Service (IRS), Treasury.

ACTION: Notice of proposed rulemaking and notice of public hearing.

SUMMARY: This document contains proposed regulations that would provide guidance under the anti-cutback rules of section 411(d)(6) of the Internal Revenue Code, which generally prohibit plan amendments eliminating or reducing accrued benefits, early retirement benefits, retirement-type subsidies, and optional forms of benefit under qualified retirement plans. These proposed regulations would provide an additional limited exception to the anti-cutback rules to permit a plan sponsor that is a debtor in a bankruptcy proceeding to amend its single-employer defined benefit plan to eliminate a single-sum distribution option (or other optional form of benefit providing for accelerated payments) under the plan if certain specified conditions are satisfied. These proposed regulations would affect administrators, employers, participants, and beneficiaries of such a plan. This document also provides notice of a public hearing on these proposed regulations.

DATES: Written or electronic comments must be received by August 20, 2012. Outlines of topics to be discussed at the public hearing scheduled for Friday, August 24, 2012, at 10 a.m. must also be received by August 16, 2012.

ADDRESSES: Send submissions to: CC:PA:LPD:PR (REG–113738–12), Room 5203, Internal Revenue Service, P.O. Box 7604, Ben Franklin Station, Washington, DC 20044. Submissions may be hand-delivered Monday through Friday between the hours of 8 a.m. and 4 p.m. to: CC:PA:LPD:PR (REG–113738–12), Courier's Desk, Internal Revenue Service, 1111 Constitution Avenue NW., Washington, DC, or sent electronically, via the Federal eRulemaking Portal at *http://www.regulations.gov* (IRS REG–113738–12). The public hearing will be held in the IRS Auditorium, Internal Revenue Building, 1111 Constitution Avenue NW., Washington, DC.

FOR FURTHER INFORMATION CONTACT: Concerning the regulations, Neil S. Sandhu or Linda S.F. Marshall at (202) 622–6090; concerning submissions of comments, the hearing, and/or being placed on the building access list to attend the hearing, Oluwafunmilayo (Funmi) Taylor at (202) 622–7180 (not toll-free numbers).

SUPPLEMENTARY INFORMATION:

Background

This document contains proposed amendments to the Income Tax Regulations (26 CFR part 1) under section 411(d)(6) of the Internal Revenue Code (Code). These proposed regulations would amend § 1.411(d)–4 of the Treasury regulations.

Section 401(a)(7) provides that a trust does not constitute a qualified trust unless its related plan satisfies the requirements of section 411 (relating to minimum vesting standards). Section 411(d)(6)(A) provides that a plan is treated as not satisfying the requirements of section 411 if the accrued benefit of a participant is decreased by an amendment of the plan, other than an amendment described in section 412(d)(2) of the Code or section 4281 of the Employee Retirement Income Security Act of 1974, Public Law 93–406 (88 Stat. 829 (1974)), as amended (ERISA).

Section 411(d)(6)(B) provides that a plan amendment that has the effect of eliminating or reducing an early retirement benefit or a retirement-type subsidy, or eliminating an optional form of benefit, with respect to benefits attributable to service before the amendment is treated as impermissibly reducing accrued benefits. For a retirement-type subsidy, this protection applies only with respect to a participant who satisfies (either before or after the amendment) the preamendment conditions for the subsidy. The last sentence of section 411(d)(6)(B) provides that the Secretary may by regulations provide that section 411(d)(6)(B) does not apply to a plan amendment that eliminates an optional form of benefit (other than a plan amendment that has the effect of eliminating or reducing an early retirement benefit or a retirement-type subsidy).

Section 436(d)(2) provides that a defined benefit plan which is a single-employer plan must provide that, during any period in which the plan sponsor is a debtor in a case under title 11, United States Code, or similar Federal or State law (a ''bankruptcy case''), the plan may not pay any ''prohibited payment.'' However, that limitation does not apply in a plan year

on or after the date on which the enrolled actuary of the plan certifies that the adjusted funding target attainment percentage (as defined in section 436(j)(2)) of the plan for the plan year is not less than 100 percent.

Section 436(d)(5) sets forth a definition of the term ''prohibited payment.'' Under this definition, a ''prohibited payment'' is: (1) Any payment, in excess of the monthly amount paid under a single life annuity (plus any social security supplements described in the last sentence of section 411(a)(9)), to a participant or beneficiary whose annuity starting date (as defined in section 417(f)(2)) occurs during any period a limitation under section 436(d)(1) or section 436(d)(2) is in effect; (2) any payment for the purchase of an irrevocable commitment from an insurer to pay benefits; and (3) any other payment specified by the Secretary by regulations. The term ''prohibited payment'' does not include the payment of a benefit which under section 411(a)(11) may be immediately distributed without the consent of the participant.

Section 1.411(d)–4, Q&A–1(a) provides that the term ''section 411(d)(6) protected benefit'' includes: (1) Benefits described in section 411(d)(6)(A); (2) early retirement benefits (as defined in § 1.411(d)–3(g)(6)(i)) and retirement type subsidies (as defined in § 1.411(d)–3(g)(6)(iv)); and (3) optional forms of benefit described in section 411(d)(6)(B)(ii).

Section 1.411(d)–4, Q&A–1(b)(1) provides that the term ''optional form of benefit'' for purposes of § 1.411(d)–4 has the same meaning as in § 1.411(d)–3(g)(6)(ii). Section 1.411(d)–3(g)(6)(ii)(A) defines the term ''optional form of benefit'' as ''a distribution alternative (including the normal form of benefit) that is available under the plan with respect to an accrued benefit or a distribution alternative with respect to a retirement-type benefit. Different optional forms of benefit exist if a distribution alternative is not payable on substantially the same terms as another distribution alternative. The relevant terms include all terms affecting the value of the optional form, such as the method of benefit calculation and the actuarial factors or assumptions used to determine the amount distributed. Thus, for example, different optional forms of benefit may result from differences in terms relating to the payment schedule, timing, commencement, medium of distribution (for example, in cash or in kind), election rights, differences in eligibility requirements, or the portion of the benefit to which the distribution alternative applies.''

Section 1.411(d)–4, Q&A–2(a)(1) provides that a plan is not permitted to be amended to eliminate or reduce a section 411(d)(6) protected benefit that has already accrued, except as provided in § 1.411(d)–3 or § 1.411(d)–4. Under § 1.411(d)–4, Q&A–2(b)(1), the Commissioner is authorized to provide for the elimination or reduction of an optional form of benefit to the extent that plan participants do not lose either a valuable right or an employer-subsidized optional form of benefit when a similar optional form of benefit with a comparable subsidy is not provided.[1] In addition, § 1.411(d)–4, Q&A–2(b)(2)(i) through (xi) sets forth specific situations under which the elimination or reduction of certain section 411(d)(6) protected benefits that have already accrued does not violate section 411(d)(6). These exceptions have been included in regulations pursuant to the Service's authority under the last sentence of section 411(d)(6)(B) to permit a plan amendment that eliminates or reduces optional forms of benefit (other than a plan amendment that has the effect of eliminating or reducing an early retirement benefit or a retirement-type subsidy).

Section 1.436–1(d)(2) provides that a plan satisfies the requirements of section 436(d)(2) and § 1.436–1(d)(2) only if the plan provides that a participant or beneficiary is not permitted to elect an optional form of benefit that includes a prohibited payment, and the plan will not pay any prohibited payment, with an annuity starting date that occurs during any period in which the plan sponsor is a debtor in a case under title 11, United States Code, or similar Federal or State law, except for payments made with an annuity starting date that occurs on or after the date within the plan year on which the enrolled actuary of the plan certifies that the plan's adjusted funding target attainment percentage for the plan year is not less than 100 percent.

Title IV of ERISA provides for a pension plan termination insurance program that is administered by the Pension Benefit Guaranty Corporation (PBGC). PBGC guarantees nonforfeitable benefits, up to specified limits, for defined benefit pension plans that are covered under the program.[2] If a single-employer plan terminates in a distress termination under section 4041(c) of ERISA or an involuntary termination under section 4042 of ERISA, and the plan assets are not sufficient to provide all guaranteed benefits, PBGC pays benefits to participants and beneficiaries under the provisions of Title IV and PBGC's regulations.[3] PBGC allows a participant who is not in pay status at the time of the termination to elect among the various annuity forms described in 29 CFR 4022.8. In addition, under 29 CFR 4022.7, PBGC does not pay benefits in a single sum in excess of $5,000 (except under certain limited circumstances).

Section 204(g) of ERISA contains rules that are parallel to Code section 411(d)(6). Under section 101 of Reorganization Plan No. 4 of 1978 (43 FR 47713) and section 204(g) of ERISA, the Secretary of the Treasury has interpretive jurisdiction over the subject matter addressed in these regulations for purposes of ERISA, as well as the Code. Thus, these regulations issued under section 411(d)(6) of the Code would apply as well for purposes of section 204(g) of ERISA.

Explanation of Provisions

These proposed regulations would provide a limited exception under section 411(d)(6)(B) to permit a plan sponsor that is a debtor in a bankruptcy proceeding to amend its single-employer defined benefit plan to eliminate a single-sum distribution option (or other optional form of benefit providing for accelerated payments) if certain conditions are satisfied.

In particular, the proposed regulations would permit a single-employer plan that is covered under section 4021 of ERISA to be amended, effective for a plan amendment that is both adopted and effective after August 31, 2012, to eliminate an optional form of benefit that includes a prohibited payment described in section 436(d)(5), provided that four conditions are satisfied on the later of the date the amendment is adopted or effective (the applicable amendment date, as defined in § 1.411(d)–3(g)(4)). First, the enrolled actuary of the plan has certified that the plan's adjusted funding target attainment percentage (as defined in section 436(j)(2)) for the plan year that contains the applicable amendment date is less than 100 percent. Second, the plan is not permitted to pay any prohibited payment, due to application of the requirements of section 436(d)(2) of the Code and section 206(g)(3)(B) of ERISA, because the plan sponsor is a debtor in a bankruptcy case (that is, a case under title 11, United States Code,

[1] Such an amendment can be authorized only through the publication of revenue rulings, notices, and other documents of general applicability. See § 601.601(d)(2)(ii)(*b*).

[2] See section 4021 of ERISA.

[3] See section 4022 of ERISA.

or under similar Federal or State law). Third, the court overseeing the bankruptcy case has issued an order, after notice to each affected party (within the meaning of section 4001(a)(21) of ERISA) and a hearing,[4] finding that the adoption of the amendment eliminating that optional form of benefit is necessary to avoid a distress termination of the plan pursuant to section 4041(c) of ERISA or an involuntary termination of the plan pursuant to section 4042 of ERISA before the plan sponsor emerges from bankruptcy (or before the bankruptcy case is otherwise completed). Fourth, PBGC has issued a determination that the adoption of the amendment eliminating that optional form of benefit is necessary to avoid a distress or involuntary termination of the plan before the plan sponsor emerges from bankruptcy (or before the bankruptcy case is otherwise completed) and that the plan is not sufficient for guaranteed benefits within the meaning of section 4041(d)(2) of ERISA.

These proposed regulations would exercise the Secretary's authority under the last sentence of section 411(d)(6)(B) in order to permit this type of amendment that eliminates an optional form of benefit in these limited circumstances. The legislative history of section 411(d)(6)(B), which was added by section 301(a) of the Retirement Equity Act of 1984, Public Law 98–397, states the intent that Treasury regulations could permit the elimination of an optional form of benefit if ''(1) the elimination of the option does not eliminate a valuable right of a participant or beneficiary, and (2) the option is not subsidized or a similar benefit with a comparable subsidy is provided.'' [5] The legislative history further states that the committee ''expects that the regulations will not permit the elimination of a 'lump-sum distribution option' because, for a participant or beneficiary with substandard mortality, the elimination of that option could eliminate a valuable right even if a benefit of equal actuarial value (based on standard mortality) is available under the plan.'' [6]

If the four conditions set forth in the regulations are satisfied, a single-sum distribution option or other optional form of benefit that includes a prohibited payment (generally a payment that is in excess of the monthly amounts payable under a single life annuity) would not currently be available and would not be available in the future. The plan would not currently be permitted to pay that optional form of benefit because section 436(d)(2) (which imposes restrictions on the payment of prohibited payments while the plan sponsor is in bankruptcy) bars the payment of such an optional form of benefit under these conditions. Furthermore, the bankruptcy court and the PBGC would each have issued a determination that the plan would be terminated in a distress or involuntary termination unless that optional form of benefit were eliminated. In addition, the PBGC would have determined that the plan is not sufficient for guaranteed benefits. In such a case, pursuant to § 4022.7 and § 4022.8 of the PBGC regulations, the optional form of benefit would not have been available after the plan termination. Accordingly, the elimination of the optional form of benefit would not result in the loss of a valuable right of a participant or beneficiary.

In addition, the plan amendment would not eliminate or reduce early retirement benefits or retirement-type subsidies, which would continue to be available under the plan. Because the plan would not be terminated in a distress or involuntary termination, participants would continue to be credited with additional service under the plan and could become eligible for early retirement benefits and retirement-type subsidies, regardless of whether participants received benefit accruals with respect to the additional service. Moreover, because the plan would not be terminated, the plan might have the opportunity to recover from its underfunded status.

Under these proposed regulations, a judicial determination must be made, after notice to each affected party (including each plan participant, each employee organization representing plan participants, and the PBGC) and a hearing, that the amendment is necessary to avoid termination of the plan in a distress or involuntary termination before the plan sponsor emerges from bankruptcy. The primary purpose of this notice and hearing requirement is to afford plan participants who may be affected the opportunity to be heard on whether the amendment is necessary to avoid plan termination.

Effective/Applicability Dates

These regulations are proposed to apply to plan amendments that are adopted and effective after August 31, 2012.

Special Analyses

It has been determined that these proposed regulations are not a significant regulatory action as defined in Executive Order 12866. Therefore, a regulatory assessment is not required. It also has been determined that section 553(b) of the Administrative Procedure Act (5 U.S.C. chapter 5) does not apply to these regulations, and because the regulation does not impose a collection of information on small entities, the Regulatory Flexibility Act (5 U.S.C. chapter 6) does not apply. Pursuant to section 7805(f) of the Code, this regulation has been submitted to the Chief Counsel for Advocacy of the Small Business Administration for comment on its impact on small business.

Comments and Public Hearing

Before these proposed regulations are adopted as final regulations, consideration will be given to any written (a signed original and eight (8) copies) or electronic comments that are submitted timely to the IRS. The Treasury Department and the IRS request comments on all aspects of the proposed rules, including specifically whether the regulations should impose additional conditions on the prospective elimination of the single-sum distribution option (or other optional form of benefit that includes a prohibited payment), such as a condition that, after the amendment, the plan must offer annuity distribution options that provide substantial survivor benefits, such as both (1) a life annuity with a term certain of 15 or more years and (2) a 100% joint and survivor annuity, in order to give participants who have substandard mortality the opportunity to protect their survivors.

All comments will be available at *www.regulations.gov* or upon request. A public hearing has been scheduled for Friday, August 24, 2012, beginning at 10 a.m. in the Auditorium, Internal Revenue Service, 1111 Constitution Avenue NW., Washington, DC. Due to building security procedures, visitors must enter at the Constitution Avenue entrance. In addition, all visitors must present photo identification to enter the building. Because of access restrictions, visitors will not be admitted beyond the immediate entrance area more than 30 minutes before the hearing starts. For information about having your name placed on the building access list to attend the hearing, see the **FOR FURTHER INFORMATION CONTACT** section of this preamble.

The rules of 26 CFR 601.601(a)(3) apply to the hearing. Persons who wish

[4] See 11 U.S.C. 102(1).

[5] S. Rep. No. 98–575, at 30 (1984).

[6] Id.

to present oral comments at the hearing must submit written or electronic comments by August 20, 2012 and submit an outline of topics to be discussed and the amount of time to be devoted to each topic (a signed original and eight (8) copies) by August 16, 2012.

A period of 10 minutes will be allotted to each person for making comments. An agenda showing the scheduling of the speakers will be prepared after the deadline for receiving outlines has passed. Copies of the agenda will be available free of charge at the hearing.

Drafting Information

The principal authors of these regulations are Neil S. Sandhu and Linda S.F. Marshall, Office of Division Counsel/Associate Chief Counsel (Tax Exempt and Government Entities). However, other personnel from the IRS and the Treasury Department participated in the development of these regulations.

List of Subjects in 26 CFR Part 1

Income taxes, Reporting and recordkeeping requirements.

Proposed Amendments to the Regulations

Accordingly, 26 CFR part 1 is proposed to be amended as follows:

PART 1—INCOME TAXES

Paragraph 1. The authority citation for part 1 continues to read in part as follows:

Authority: 26 U.S.C. 7805 * * *

Par. 2. Section 1.411(d)–4 is amended by adding a new paragraph A–2(b)(2)(xii) to read as follows:

§ 1.411(d)–4 Section 411(d)(6) protected benefits.

* * * * *

Q&A–2: * * *

(b) * * *

(2) * * *

(xii) *Prohibited payment option under single-employer defined benefit plan of plan sponsor in bankruptcy.* A single-employer plan that is covered under section 4021 of the Employee Retirement Income Security Act of 1974, Public Law 93–406 (88 Stat. 829 (1974)), as amended (ERISA), may be amended, effective for a plan amendment that is both adopted and effective after August 31, 2012, to eliminate an optional form of benefit that includes a prohibited payment described in section 436(d)(5), provided that the following conditions are satisfied on the applicable amendment date (as defined in § 1.411(d)–3(g)(4)):

(A) The enrolled actuary of the plan has certified that the plan's adjusted funding target attainment percentage (as defined in section 436(j)(2)) for the plan year that contains the applicable amendment date is less than 100 percent;

(B) The plan is not permitted to pay any prohibited payment, due to application of the requirements of section 436(d)(2) of the Internal Revenue Code and section 206(g)(3)(B) of ERISA, because the plan sponsor is a debtor in a bankruptcy case (that is, a case under title 11, United States Code, or under similar Federal or State law);

(C) The court overseeing the bankruptcy case has issued an order, after notice to each affected party (within the meaning of section 4001(a)(21) of ERISA) and a hearing, finding that the adoption of the amendment eliminating that optional form of benefit is necessary to avoid a distress termination of the plan pursuant to section 4041(c) of ERISA or an involuntary termination of the plan pursuant to section 4042 of ERISA before the plan sponsor emerges from bankruptcy (or before the bankruptcy case is otherwise completed); and

(D) The Pension Benefit Guaranty Corporation has issued a determination that—

(*1*) The adoption of the amendment eliminating that optional form of benefit is necessary to avoid a distress or involuntary termination of the plan before the plan sponsor emerges from bankruptcy (or before the bankruptcy case is otherwise completed); and

(*2*) The plan is not sufficient for guaranteed benefits within the meaning of section 4041(d)(2) of ERISA.

* * * * *

Steven T. Miller,

Deputy Commissioner for Services and Enforcement.

[FR Doc. 2012–15072 Filed 6–20–12; 8:45 am]

BILLING CODE 4830–01–P

DEPARTMENT OF THE TREASURY

Internal Revenue Service

26 CFR Parts 1 and 301

[REG–153627–08]

RIN–1545–B140

Reporting and Notice Requirements for Deferred Vested Benefits Under Section 6057

AGENCY: Internal Revenue Service (IRS), Treasury.

ACTION: Notice of proposed rulemaking.

SUMMARY: This document contains proposed regulations that would provide guidance relating to automatic extensions of time for filing certain employee plan returns by adding the Form 8955–SSA, ''Annual Registration Statement Identifying Separated Participants With Deferred Vested Benefits,'' to the list of forms that are covered by the Income Tax Regulations on automatic extensions. The proposed regulations would also provide guidance on applicable reporting and participant notice rules that require certain plan administrators to file registration statements and provide notices that set forth information for deferred vested participants. These regulations would affect administrators of, employers maintaining, participants in, and beneficiaries of plans that are subject to the reporting and participant notice requirements.

DATES: Comments and requests for a public hearing must be received by September 19, 2012.

ADDRESSES: Send submissions to CC:PA:LPD:PR (REG–153627–08), Room 5205, Internal Revenue Service, P.O. Box 7604, Ben Franklin Station, Washington, DC 20044. Submissions may be hand-delivered Monday through Friday between the hours of 8 a.m. and 4 p.m. to CC:PA:LPD:PR (REG–153627–08), Courier's Desk, Internal Revenue Service, 1111 Constitution Avenue NW., Washington, DC, 20224 or sent electronically via the Federal eRulemaking Portal at *www.regulations.gov* (IRS REG–153627–08).

FOR FURTHER INFORMATION CONTACT: Concerning the proposed regulations, William Gibbs, Sarah Bolen, or Pamela Kinard at (202) 622–6060; concerning the submission of comments or to request a public hearing, Oluwafunmilayo Taylor, (202) 622–7180 (not toll-free numbers).

SUPPLEMENTARY INFORMATION:

Paperwork Reduction Act

The collection of information contained in this notice of proposed rulemaking has been approved by the Office of Management and Budget for review in accordance with the Paperwork Reduction Act of 1995 (44 U.S.C. 3507(d)) under 1545–2187 and 1545–0212. Comments on the collection of information should be sent to the Office of Management and Budget, Attn: Desk Officer for the Department of the Treasury, Office of Information and Regulatory Affairs, Washington, DC 20503, with copies to the Internal Revenue Service, Attn: IRS Reports Clearance Officer, SE:CAR:MP:T:T:SP; Washington, DC 20224. Comments on

the collection of information should be received by August 20, 2012. Comments are specifically requested concerning:

Whether the proposed collection of information is necessary for the proper performance of the functions of the Internal Revenue Service, including whether the information will have practical utility;

The accuracy of the estimated burden associated with the proposed collection of information;

How the quality, utility, and clarity of the information to be collected may be enhanced;

How the burden of complying with the proposed collection of information may be minimized, including through the application of automated collection techniques or other forms of information technology; and

Estimates of capital or start–up costs and costs of operation, maintenance, and purchase of service to provide information.

The collection of information in these proposed regulations is in §§ 301.6057–1 and 1.6081–11. This information is required in order to comply with the reporting and notice requirements of section 6057 and to provide automatic extensions of time for filing certain employee plan returns under section 6081. Information relating to these proposed regulations will be collected through Form 8955–SSA and Form 5558. This information relates to plan participants who separate from service covered under the plan and who are entitled to deferred vested retirement benefits under the plan. Any burden relating to these proposed regulations will be included and reported in the next revisions of Form 8955–SSA and Form 5558, after these proposed regulations are accepted as final.

An agency may not conduct or sponsor, and a person is not required to respond to, a collection of information, unless it displays a valid control number assigned by the Office of Management and Budget.

Books or records relating to a collection of information must be retained as long as their contents may become material in the administration of any internal revenue law. Generally, tax returns and tax return information are confidential, as required by 26 U.S.C. 6103.

Background

Section 6057(a) of the Internal Revenue Code (Code) requires the administrator of a plan that is subject to the vesting standards of section 203 of the Employee Retirement Income Security Act of 1974 (ERISA) to file, within the time prescribed by regulations, a registration statement with the Secretary of the Treasury. The registration statement sets forth certain information relating to the plan, plan participants who separate from service covered by the plan and are entitled to deferred vested retirement benefits, and the nature, amount, and form of deferred vested retirement benefits to which the plan participants are entitled.

Section 6057(b) provides that any plan administrator required to register under section 6057(a) shall, within the time prescribed by regulations, also notify the Secretary of any change in the name of the plan or the name and address of the plan administrator, the termination of the plan, or the merger or consolidation of the plan with any other plan or its division into two or more plans.

Section 6057(c) provides that, to the extent provided in regulations prescribed by the Secretary, the administrator of a plan not subject to the reporting requirements of section 6057(a) (including a governmental plan within the meaning of section 414(d) or a church plan within the meaning of section 414(e)) may at its option file such information as the plan administrator may wish to file with respect to the deferred retirement vested benefit rights of any plan participant separated from service covered by the plan.

Section 6057(d) requires the Secretary to transmit copies of any statements, notifications, reports, or other information obtained by the Secretary under section 6057 to the Commissioner of Social Security.

Section 6057(e) of the Code and section 105(c) of ERISA require each plan administrator that is subject to the reporting requirements of section 6057 to furnish to each deferred vested participant an individual statement setting forth the information required by section 6057(a)(2). The individual statement required by section 6057(e) must also notify each participant of any benefits that are forfeitable if the participant dies before a certain date. The individual statement must be furnished no later than the date for filing the registration statement required under section 6057(a).

Section 6057(f)(1) provides that the Secretary, after consultation with the Commissioner of Social Security, may issue such regulations as may be necessary to carry out the provisions of this section.

Since the enactment of ERISA, the Schedule SSA, a schedule to the Form 5500, ''Annual Return/Report of Employee Benefit Plan,'' has been the form used by plan administrators to comply with the reporting requirements of section 6057. On July 21, 2006, the Department of Labor (DOL) published a final rule in the **Federal Register** (71 FR 41359) requiring electronic filing of the Form 5500 series for plan years beginning after January 1, 2008. On November 16, 2007, the DOL published a final rule in the **Federal Register** (72 FR 64710) postponing the effective date of the electronic filing mandate to apply to plan years beginning on or after January 1, 2009. See 29 CFR § 2520.104a–2.

In order to implement the DOL's mandate for electronic filing of the Form 5500, the IRS-only schedules to the Form 5500, including the Schedule SSA, were eliminated from the Form 5500. One result of the elimination of the Schedule SSA is that Form 5500 filings that include Schedule SSA information regarding participants are now subject to rejection (even for late or amended filings for plan years before 2009). The Schedule SSA was replaced by Form 8955–SSA, ''Annual Registration Statement Identifying Separated Participants With Deferred Vested Benefits,'' an IRS-only stand-alone form. Announcement 2011–21 (2011–12 IRB 567), see § 601.601(d)(2), designates Form 8955–SSA as the form to be used to satisfy the reporting requirements of section 6057 for plan years beginning on or after January 1, 2009. Announcement 2011–21 also established an annual due date for the filing of the Form 8955–SSA. In general, if a Form 8955–SSA must be filed for a plan year, it must be filed by the last day of the 7th month following the last day of that plan year (plus extensions).

Section 6081(a) provides that the Secretary may grant a reasonable extension of time for filing any required return, declaration, statement, or other document. Except for certain taxpayers, the extension of time shall not exceed 6 months.

Section 1.6081–1(a) of the Income Tax Regulations provides that the Commissioner is authorized to grant a reasonable extension of time for filing any return, declaration, statement, or other document that relates to any tax imposed under subtitle A of the Code. Under § 1.6081–1(b), the application must be in writing, be signed by the taxpayer or his representative, and set forth the reason for requesting an extension.

Section 1.6081–11 of the regulations provides that a plan administrator or sponsor of an employee benefit plan required to file a Form 5500 will be allowed an automatic extension of the time to file the Form 5500. To receive an automatic extension of time to file,

the plan administrator or sponsor must complete a Form 5558, ''Application for Extension of Time to File Certain Employee Benefit Returns,'' and file the application with the Internal Revenue Service on or before the date that the Form 5500 series return must be filed.

Form 5558 is used to request an automatic extension of time to file a Form 5500 return or Form 8955–SSA. In accordance with § 1.6081–11 and Form 5558 (including instructions), an application for an extension of time to file a Form 5500 series return need not be signed. However, in accordance with § 1.6081–1, Form 5558 provides that an application for an extension of time to file Form 8955–SSA must be signed.

Explanation of Provisions

After the current version of the Form 5558 was issued, several comments were received that questioned the need for a signature to extend the time for filing Form 8955–SSA, particularly since a signature is not required to extend the time to file a Form 5500 series return. The commentators noted that, like its predecessor, the Schedule SSA, the Form 8955–SSA is generally prepared in conjunction with the preparation of a plan's Form 5500. They also stated that a signature requirement for the Form 8955–SSA is likely to cause confusion and missed deadlines because of the different rule for the Form 5500. Finally, the commentators contended that the signature requirement is burdensome for both filers and the IRS because the requirement complicates the extension request process.

The proposed regulations would amend § 1.6081–11, relating to automatic extensions of time for filing certain employee plan returns, by adding the Form 8955–SSA to the list of forms that are covered by the automatic 2½ month extension that applies by filing Form 5558. This will permit a plan administrator to receive an automatic extension of 2½ months by submitting, on or before the general due date of the Form 8955–SSA, a Form 5558 indicating that an extension is being requested for filing the Form 8955–SSA. Thus, under the proposed regulations, the same rules that apply to request an extension of time to file the Form 5500 series would also apply to request an extension of time to file Form 8955–SSA. In addition, the proposed regulations would amend § 1.6081–11 to provide that a signature would not be required to request an extension of time to file Form 5500 and Form 8955–SSA. It is anticipated that the Form 5558 and instructions will be revised to reflect this change for the Form 8955–SSA.

In addition, pursuant to section 6011(a), these proposed regulations would formally designate the Form 8955–SSA as the form used to satisfy the reporting requirements of section 6057. These proposed regulations would retain the general reporting requirements that applied to the Schedule SSA with certain minor modifications.

As discussed in the background section of this preamble, section 6057(a) requires the plan administrator (within the meaning of section 414(g)) of a plan that is subject to the vesting standards of section 203 of ERISA to file, within the time prescribed by regulations, a registration statement that sets forth certain information on deferred vested participants. Under existing § 301.6057–1(c)(1) of the Procedure and Administration regulations, the plan administrator of an employee benefit plan described in § 301.6057–1(a)(3), or any other employee retirement benefit plan (including a governmental or church plan), may at its option file on the Schedule SSA information relating to the deferred vested retirement benefit of any plan participant who separates at any time from service covered under the plan. These proposed regulations would retain the ability of such plans to report deferred vested information on a voluntary basis but require that the information be submitted to the IRS on Form 8955–SSA. The proposed regulations would also delegate authority to the Commissioner of the Internal Revenue Service to provide special rules under section 6057 (including designating the form used to comply with section 6057) in revenue rulings, notices, or other guidance published in the Internal Revenue Bulletin (see § 601.601(d)(2)(ii)(*b*) of this chapter). Finally, the proposed regulations would delete certain obsolete transition rules and update cross-references in §§ 1.6057–1 and 1.6057–2.

Proposed Effective Date

These regulations are generally proposed to be effective on or after June 21, 2012. Taxpayers may rely on these proposed regulations for guidance pending the issuance of final regulations. If, and to the extent, the final regulations are more restrictive than the guidance in these proposed regulations, those provisions of the final regulations will be applied without retroactive effect.

Special Analyses

It has been determined that this notice of proposed rulemaking is not a significant regulatory action as defined in Executive Order 12866. Therefore, a regulatory assessment is not required. It has been determined that 5 U.S.C. 533(b) of the Administrative Procedure Act (5 U.S.C. chapter 5) does not apply to these regulations. It is hereby certified that the collection of information in these proposed regulations will not have a significant economic impact on a substantial number of small entities. This certification is based on the fact that most small entities that maintain employee retirement income benefit plans use third party administrators to perform their recordkeeping function. Therefore, an analysis under the Regulatory Flexibility Act (5 U.S.C. chapter 6) is not required. Pursuant to section 7805(f) of the Internal Revenue Code, these regulations have been submitted to the Office of Chief Counsel for Advocacy of the Small Business Administration for comments on its impact on small business.

Comments and Requests for Public Hearing

Before these proposed regulations are adopted as final regulations, consideration will be given to any comments that are submitted timely to the IRS as prescribed in this preamble under the **ADDRESSES** heading. The IRS and Treasury Department request comments on all aspects of the proposed rules. All comments are available at *www.regulations.gov* or upon request. A public hearing will be scheduled if requested in writing by any person who timely submits written comments. If a public hearing is scheduled, notice of the date, time, and place of the public hearing will be published in the **Federal Register**.

Drafting Information

The principal authors of these regulations are Sarah R. Bolen and Pamela R. Kinard, Office of Division Counsel/Associate Chief Counsel (Tax Exempt and Government Entities). However, other personnel from the IRS and the Treasury Department participated in the development of these regulations.

List of Subjects

26 CFR Part 1

Income taxes, Reporting and recordkeeping requirements.

26 CFR Part 301

Employment taxes, Estate taxes, Gift taxes, Income taxes, Penalties, Reporting and Recordkeeping requirements.

Proposed Amendments to the Regulations

Accordingly, 26 CFR parts 1 and 301 are proposed to be amended as follows:

PART 1—INCOME TAXES

Paragraph 1. The authority citation for part 1 continues to read in part as follows:

Authority: 26 U.S.C. 7805 * * *

Par. 2. Section 1.6081–11 is amended by:

1. Revising paragraph (a).
2. Adding paragraph (b)(3).
3. Revising the paragraph heading of paragraph (d) and adding paragraph (d)(2).
4. Revising the paragraph heading of paragraph (e) and adding paragraph (e)(2).

The revisions and additions read as follows:

§ 1.6081–11 Automatic extension of time for filing certain employee plan returns.

(a) *In general.* An administrator or sponsor of an employee benefit plan required to file a return under the provisions of subpart E of part III of chapter 61 or the regulations under that chapter on Form 5500 (series), ''Annual Return/Report of Employee Benefit Plan'' or Form 8955–SSA, ''Annual Registration Statement Identifying Separated Participants with Deferred Vested Benefits,'' will be allowed an automatic extension of time to file the return until the 15th day of the third month following the date prescribed for filing the return if the administrator or sponsor files an application under this section in accordance with paragraph (b) of this section.

(b) * * *

(3) A signature is not required for an automatic extension of time to file Form 5500 (series) and Form 8955–SSA.

* * * * *

(d) *Penalties*—(1) *Form 5500.* * * *

(2) *Form 8955–SSA.* See section 6652 for penalties for failure to file a timely and complete Form 8955–SSA.

(e) *Effective/Applicability dates*—(1) *Form 5500.* * * *

(2) *Form 8955–SSA.* This section is applicable for applications for an automatic extension of time to file Form 8955–SSA filed after June 21, 2012.

PART 301—PROCEDURE AND ADMINISTRATION

Par. 3. The authority for part 301 continues to read in part as follows:

Authority: 26 U.S.C. 7508 * * *

Par. 4. Section 301.6057–1 is amended by:

1. Revising paragraphs (a)(4) and (a)(5)(ii).
2. Removing paragraph (b)(2)(iii) and redesignating paragraph (b)(2)(iv) as (b)(2)(iii).
3. Revising newly designated paragraph (b)(2)(iii).
4. Revising paragraphs (b)(3)(ii), (b)(3)(iii), (c), (d), (f), and (g).

The revisions read as follows:

§ 301.6057–1 Employee retirement benefit plans; identification of participant with deferred vested retirement benefit.

(a) * * *

(4) *Filing requirements*—(i) *In general.* Information relating to the deferred vested retirement benefit of a plan participant must be filed on Form 8955–SSA, ''Annual Registration Statement Identifying Separated Participants With Deferred Vested Benefits.'' Form 8955–SSA shall be filed on behalf of an employee retirement benefit plan for each plan year for which information relating to the deferred vested retirement benefit of a plan participant is filed under paragraph (a)(5) or (b)(2) of this section. There shall be reported on Form 8955–SSA the name and Social Security number of the participant, a description of the nature, form and amount of the deferred vested retirement benefit to which the participant is entitled, and such other information as is required by section 6057(a) or Form 8955–SSA and the accompanying instructions. The form of the benefit reported on Form 8955–SSA shall be the normal form of benefit under the plan, or, if the plan administrator (within the meaning of section 414(g)) considers it more appropriate, any other form of benefit.

(ii) *General due date for filing.* The forms prescribed by section 6057(a), including Form 8955–SSA, shall be filed in the manner and at the time as required by the forms and related instructions applicable to the annual period.

(iii) *Delegation of authority to Commissioner.* The Commissioner may provide special rules under section 6057 (including designating the form used to comply with section 6057) in revenue rulings, notices, or other guidance published in the Internal Revenue Bulletin (see § 601.601(d)(2)(ii)(*b*) of this chapter) that the Commissioner determines to be necessary or appropriate with respect to the filing requirements under section 6057.

(5) * * *

(ii) *Exception.* Nothwithstanding paragraph (a)(5)(i) of this section, no information relating to the deferred vested retirement benefit of a separated participant is required to be filed on Form 8955–SSA if, before the date such Form 8955–SSA is required to be filed (including any extension of time for filing granted pursuant to section 6081), the participant—

(A) Is paid some or all of the deferred vested retirement benefit under the plan;

(B) Returns to service covered under the plan; or

(C) Forfeits all of the deferred vested retirement benefit under the plan.

(b) * * *

(2) * * *

(iii) *Exception.* Notwithstanding paragraph (b)(2)(i) of this section, no information relating to a participant's deferred vested retirement benefit is required to be filed on Form 8955–SSA if, before the date such Form 8955–SSA is required to be filed (including any extension of time for filing granted pursuant to section 6081), the participant—

(A) Is paid some or all of the deferred vested retirement benefit under the plan;

(B) Accrues additional retirement benefits under the plan; or

(C) Forfeits all of the deferred vested retirement benefit under the plan.

(3) * * *

(ii) *Inability to determine correct amount of participant's deferred vested retirement benefit.* The plan administrator must indicate on Form 8955–SSA that the amount of a participant's deferred vested retirement benefit showed therein may be other than that to which the participant is actually entitled if such amount is computed on the basis of plan records that the plan administrator maintains and such records—

(A) Are incomplete with respect to the participant's service covered by the plan (as described in paragraph (b)(3)(i) of this section); or

(B) Fail to account for the participant's service not covered by the plan which is relevant to a determination of the participant's deferred vested retirement benefit under the plan (as described in paragraph (b)(3)(i) of this section).

(iii) *Inability to determine whether participant vested in deferred retirement benefit.* Where, as described in paragraph (b)(3)(i) of this section, information to be reported on Form 8955–SSA is to be based upon records which are incomplete with respect to a participant's service covered by the plan or which fail to take into account relevant service not covered by the plan, the plan administrator may be unable to determine whether or not the participant is vested in any deferred retirement benefit. If, in view of

information provided either by the incomplete records or the plan participant, there is a significant likelihood that the plan participant is vested in a deferred retirement benefit under the plan, information relating to the participant must be filed on Form 8955–SSA with the notation that the participant may be entitled to a deferred vested benefit under the plan, but information relating to the amount of the benefit may be omitted. This paragraph (b)(3)(iii) does not apply in a case in which it can be determined from plan records maintained by the plan administrator that the participant is vested in a deferred retirement benefit. Paragraph (b)(3)(ii) of this section, however, may apply in such a case.

(c) *Voluntary filing*—(1) *In general.* The plan administrator of an employee retirement benefit plan described in paragraph (a)(3) of this section, or any other employee retirement benefit plan (including a governmental plan within the meaning of section 414(d) or a church plan within the meaning of section 414(e)), may, at its option, file on Form 8955–SSA information relating to the deferred vested retirement benefit of any plan participant who separates at any time from service covered by the plan.

(2) *Deleting previously filed information.* If, after information relating to the deferred vested retirement benefit of a plan participant is filed on Form 8955–SSA (or a predecessor to Form 8955–SSA), the plan participant is paid some or all of the deferred vested retirement benefit under the plan or forfeits all of the deferred vested retirement benefit under the plan, the plan administrator may, at its option, file on Form 8955–SSA (or such other form as may be provided for this purpose) the name and Social Security number of the plan participant with the notation that information previously filed relating to the participant's deferred vested retirement benefit should be deleted.

(d) *Filing incident to cessation of payment of benefits*—(1) *In general.* No information relating to the deferred vested retirement benefit of a plan participant is required to be filed on Form 8955–SSA if before the date such Form 8955–SSA is required to be filed, some of the deferred vested retirement benefit is paid to the participant, and information relating to a participant's deferred vested retirement benefit which was previously filed on Form 8955–SSA (or a predecessor to Form 8955–SSA) may be deleted if the participant is paid some of the deferred vested retirement benefit. If payment of the deferred vested retirement benefit ceases before all of the benefit to which the participant is entitled is paid to the participant, information relating to the deferred vested retirement benefit to which the participant remains entitled shall be filed on the Form 8955–SSA filed for the plan year following the last plan year within which a portion of the benefit is paid to the participant.

(2) *Exception.* Notwithstanding paragraph (d)(1) of this section, no information relating to the deferred vested retirement benefit to which the participant remains entitled is required to be filed on Form 8955–SSA if, before the date such Form 8955–SSA is required to be filed (including any extension of time for filing granted pursuant to section 6081), the participant—

(i) Returns to service covered by the plan;

(ii) Accrues additional retirement benefits under the plan; or

(iii) Forfeits the benefit under the plan.

* * * * *

(f) *Penalties.* For amounts imposed in the case of failure to file the report of deferred vested retirement benefits required by section 6057(a) and paragraph (a) or (b) of this section, see section 6652(d)(1).

(g) *Effective/applicability date*—(1) *In general.* Except as otherwise provided in this paragraph (g), this section is applicable for filings on or after June 21, 2012.

(2) *Special effective date rules for periods before the general effective date.* Section 301.6057–1 of this chapter, as it appeared in the April 1, 2008 edition of 26 CFR part 301, applies for periods before the general effective date.

§ 301.6057–1 [Amended]

Par. 5. Section 301.6057–1 is amended by removing the language ''schedule SSA'' and adding ''Form 8955–SSA'' in its place.

Par. 6. Section 301.6057–2 is amended by revising paragraph (c) as follows:

§ 301.6057–2 Employee retirement benefit plans; notification of change in plan status.

* * * * *

(c) *Penalty.* For amounts imposed in the case of failure to file a notification of a change in plan status required by section 6057(b) and this section, see section 6652(d)(2).

* * * * *

Steven T. Miller,

Deputy Commissioner for Services and Enforcement.

[FR Doc. 2012–15068 Filed 6–20–12; 8:45 am]

BILLING CODE 4830–01–P

DEPARTMENT OF HOMELAND SECURITY

Coast Guard

33 CFR Part 165

[Docket Number USCG–2012–0494]

RIN 1625–AA00

Safety Zone for Fireworks Display, Pamlico River; Washington, NC

AGENCY: Coast Guard, DHS.

ACTION: Notice of proposed rulemaking.

SUMMARY: The Coast Guard is proposing the establishment of a temporary safety zone on the Pamlico and Tar Rivers, Washington, NC. This action is necessary to protect the life and property of the maritime public from the hazards posed by fireworks displays. This zone is intended to restrict vessels from a portion of the Pamlico River and Tar River during Beaufort County's 300th Anniversary Celebration Fireworks.

DATES: Comments and related material must be received by the Coast Guard on or before July 23, 2012.

ADDRESSES: You may submit comments identified by docket number using any one of the following methods:

(1) *Federal eRulemaking Portal: http://www.regulations.gov.*

(2) *Fax:* 202–493–2251.

(3) *Mail or Delivery:* Docket Management Facility (M–30), U.S. Department of Transportation, West Building Ground Floor, Room W12–140, 1200 New Jersey Avenue SE., Washington, DC 20590–0001. Deliveries accepted between 9 a.m. and 5 p.m., Monday through Friday, except federal holidays. The telephone number is 202–366–9329.

See the ''Public Participation and Request for Comments'' portion of the **SUPPLEMENTARY INFORMATION** section below for further instructions on submitting comments. To avoid duplication, please use only one of these three methods.

FOR FURTHER INFORMATION CONTACT: If you have questions on this rule, call or email CWO3 Joseph M. Edge, Sector North Carolina Waterways Management, Coast Guard; telephone 252–247–4525, email *Joseph.M.Edge@uscg.mil.* If you have questions on viewing or submitting material to the docket, call Renee V. Wright, Program Manager, Docket Operations, telephone (202) 366–9826.

SUPPLEMENTARY INFORMATION:

Table of Acronyms

DHS Department of Homeland Security

FR **Federal Register**
NPRM Notice of Proposed Rulemaking

A. Public Participation and Request for Comments

We encourage you to participate in this rulemaking by submitting comments and related materials. All comments received will be posted without change to *http://www.regulations.gov* and will include any personal information you have provided.

1. Submitting Comments

If you submit a comment, please include the docket number for this rulemaking, indicate the specific section of this document to which each comment applies, and provide a reason for each suggestion or recommendation. You may submit your comments and material online at *http://www.regulations.gov,* or by fax, mail, or hand delivery, but please use only one of these means. If you submit a comment online, it will be considered received by the Coast Guard when you successfully transmit the comment. If you fax, hand deliver, or mail your comment, it will be considered as having been received by the Coast Guard when it is received at the Docket Management Facility. We recommend that you include your name and a mailing address, an email address, or a telephone number in the body of your document so that we can contact you if we have questions regarding your submission.

To submit your comment online, go to *http://www.regulations.gov,* type the docket number (USCG–2012–0494) in the ''SEARCH'' box and click ''SEARCH.'' Click on ''Submit a Comment'' on the line associated with this rulemaking.

If you submit your comments by mail or hand delivery, submit them in an unbound format, no larger than 8½ by 11 inches, suitable for copying and electronic filing. If you submit comments by mail and would like to know that they reached the Facility, please enclose a stamped, self-addressed postcard or envelope. We will consider all comments and material received during the comment period and may change the rule based on your comments.

2. Viewing Comments and Documents

To view comments, as well as documents mentioned in this preamble as being available in the docket, go to *http://www.regulations.gov,* type the docket number (USCG–2012–0494) in the ''SEARCH'' box and click ''SEARCH.'' Click on Open Docket Folder on the line associated with this rulemaking. You may also visit the Docket Management Facility in Room W12–140 on the ground floor of the Department of Transportation West Building, 1200 New Jersey Avenue SE., Washington, DC 20590, between 9 a.m. and 5 p.m., Monday through Friday, except Federal holidays.

3. Privacy Act

Anyone can search the electronic form of comments received into any of our dockets by the name of the individual submitting the comment (or signing the comment, if submitted on behalf of an association, business, labor union, etc.). You may review a Privacy Act notice regarding our public dockets in the January 17, 2008, issue of the **Federal Register** (73 FR 3316).

4. Public Meeting

We do not now plan to hold a public meeting. But you may submit a request for one, using one of the methods specified under **ADDRESSES**. Please explain why you believe a public meeting would be beneficial. If we determine that one would aid this rulemaking, we will hold one at a time and place announced by a later notice in the **Federal Register**.

B. Regulatory History and Information

There is no specific regulatory history for the Beaufort County 300th Celebration Fireworks Display. However, the parameters of the Safety Zone contemplated for the event are substantially the same as the parameters of the Safety Zone utilized for the Washington Summer Festival and the Washington 4th of July Fireworks that was recently amended by USCG–2012–0097 and posted in the **Federal Register** in Vol 77 FR 14703.

C. Basis and Purpose

On September 22, 2012 fireworks will be launched from a point on land near the Pamlico and Tar Rivers to commemorate Beaufort County's 300th anniversary. The temporary safety zone created by this rule is necessary to ensure the safety of vessels and spectators from hazards associated with the fireworks display. Such hazards include obstructions to the waterway that may cause death, serious bodily harm, or property damage. Establishing a safety zone to control vessel movement around the location of the launch area will help ensure the safety of persons and property in the vicinity of this event and help minimize the associated risks.

D. Discussion of Proposed Rule

A temporary safety zone is necessary to ensure the safety of spectators and vessels during the setup, loading, and launching of the Beaufort County 300th Anniversary Fireworks Display. The fireworks display will occur for approximately 25 minutes from 9 p.m. to 9:25 p.m. on September 22, 2012. However, the Safety Zone would be effective and enforced from 8 p.m. until 10 p.m. in order to ensure safety during the setup, loading and removal of the display equipment.

The safety zone would encompass all waters on the Pamlico and Tar Rivers within a 300 yard radius of the launch site on land at position 35°32′25″ N, longitude 077°03′42″ W from 8 p.m. until 10 p.m. on September 22, 2012. All geographic coordinates are North American Datum 1983 (NAD 83). The effect of this temporary safety zone will be to restrict navigation in the regulated area during the fireworks display.

All persons and vessels would have to comply with the instructions of the Coast guard Captain of the Port or the designated on scene patrol personnel. Entry into, transiting, or anchoring within the safety zone would be prohibited unless authorized by the Captain of the Port Sector North Carolina or his designated representative. The Captain of the Port or his designated representative may be contacted via VHF Channel 16. Notification of the temporary safety zone will be provided to the public via marine information broadcasts.

E. Regulatory Analyses

We developed this proposed rule after considering numerous statutes and executive orders related to rulemaking. Below we summarize our analyses based on a number of these statutes or executive orders.

1. Regulatory Planning and Review

This proposed rule is not a significant regulatory action under section 3(f) of Executive Order 12866, Regulatory Planning and Review, as supplemented by Executive Order 13563, Improving Regulation and Regulatory Review, and does not require an assessment of potential costs and benefits under section 6(a)(3) of Executive Order 12866 or under section 1 of Executive Order 13563. The Office of Management and Budget has not reviewed it under those Orders. Although this regulation will restrict access to the area, the effect of this rule will not be significant because: (i) The safety zone will only be in effect from 8 p.m. to 10 p.m. on September 22, 2012, (ii) the Coast Guard will give

advance notification via maritime advisories so mariners can adjust their plans accordingly, and (iii) although the safety zone will apply to the section of the Pamlico River and Tar River, vessel traffic will be able to transit safely around the safety zone.

2. Impact on Small Entities

Under the Regulatory Flexibility Act (5 U.S.C. 601–612), we have considered the impact of this proposed rule on small entities. The Coast Guard certifies under 5 U.S.C. 605(b) that this proposed rule will not have a significant economic impact on a substantial number of small entities.

This rule will affect the following entities, some of which may be small entities: the owners or operators of vessels intending to transit through or anchor in the specified portion of Pamlico River and Tar River from 8 p.m. to 10 p.m. on September 22, 2012.

This safety zone will not have a significant economic impact on a substantial number of small entities for the following reasons. This rule will only be in effect for two hours, from 8 p.m. to 10 p.m. Although the safety zone will apply to a section of the Pamlico River, vessel traffic will be able to transit safely around the safety zone. Before the effective period, the Coast Guard will issue maritime advisories widely available to the users of the waterway.

If you think that your business, organization, or governmental jurisdiction qualifies as a small entity and that this rule would have a significant economic impact on it, please submit a comment (see **ADDRESSES**) explaining why you think it qualifies and how and to what degree this rule would economically affect it.

3. Assistance for Small Entities

Under section 213(a) of the Small Business Regulatory Enforcement Fairness Act of 1996 (Pub. L. 104–121), we want to assist small entities in understanding this proposed rule. If the rule would affect your small business, organization, or governmental jurisdiction and you have questions concerning its provisions or options for compliance, please contact the person listed in the **FOR FURTHER INFORMATION CONTACT**, above. The Coast Guard will not retaliate against small entities that question or complain about this proposed rule or any policy or action of the Coast Guard.

4. Collection of Information

This proposed rule will not call for a new collection of information under the Paperwork Reduction Act of 1995 (44 U.S.C. 3501–3520).

5. Federalism

A rule has implications for federalism under Executive Order 13132, Federalism, if it has a substantial direct effect on the States, on the relationship between the national government and the States, or on the distribution of power and responsibilities among the various levels of government. We have analyzed this proposed rule under that Order and determined that this rule does not have implications for federalism.

6. Protest Activities

The Coast Guard respects the First Amendment rights of protesters. Protesters are asked to contact the person listed in the **FOR FURTHER INFORMATION CONTACT** section to coordinate protest activities so that your message can be received without jeopardizing the safety or security of people, places or vessels.

7. Unfunded Mandates Reform Act

The Unfunded Mandates Reform Act of 1995 (2 U.S.C. 1531–1538) requires Federal agencies to assess the effects of their discretionary regulatory actions. In particular, the Act addresses actions that may result in the expenditure by a State, local, or tribal government, in the aggregate, or by the private sector of $100,000,000 (adjusted for inflation) or more in any one year. Though this proposed rule would not result in such an expenditure, we do discuss the effects of this rule elsewhere in this preamble.

8. Taking of Private Property

This proposed rule would not cause a taking of private property or otherwise have taking implications under Executive Order 12630, Governmental Actions and Interference with Constitutionally Protected Property Rights.

9. Civil Justice Reform

This proposed rule meets applicable standards in sections 3(a) and 3(b)(2) of Executive Order 12988, Civil Justice Reform, to minimize litigation, eliminate ambiguity, and reduce burden.

10. Protection of Children From Environmental Health Risks

We have analyzed this proposed rule under Executive Order 13045, Protection of Children from Environmental Health Risks and Safety Risks. This rule is not an economically significant rule and would not create an environmental risk to health or risk to safety that might disproportionately affect children.

11. Indian Tribal Governments

This proposed rule does not have tribal implications under Executive Order 13175, Consultation and Coordination with Indian Tribal Governments, because it would not have a substantial direct effect on one or more Indian tribes, on the relationship between the Federal Government and Indian tribes, or on the distribution of power and responsibilities between the Federal Government and Indian tribes.

12. Energy Effects

This proposed rule is not a ''significant energy action'' under Executive Order 13211, Actions Concerning Regulations That Significantly Affect Energy Supply, Distribution, or Use because it is not a ''significant regulatory action'' under Executive Order 12866 and is not likely to have a significant adverse effect on the supply, distribution, or use of energy. The Administrator of the Office of Information and Regulatory Affairs has not designated it as a significant energy action. Therefore, it does not require a Statement of Energy Effects under Executive Order 13211.

13. Technical Standards

This proposed rule does not use technical standards. Therefore, we did not consider the use of voluntary consensus standards.

14. Environment

We have analyzed this proposed rule under Department of Homeland Security Management Directive 023–01 and Commandant Instruction M16475.lD, which guide the Coast Guard in complying with the National Environmental Policy Act of 1969 (NEPA) (42 U.S.C. 4321–4370f), and have made a preliminary determination that this action is one of a category of actions that do not individually or cumulatively have a significant effect on the human environment. This proposed rule establishes a temporary safety zone to protect the public from fireworks fallout. This rule is categorically excluded from further review under paragraph 34(g) of Figure 2–1 of the Commandant Instruction. A preliminary environmental analysis checklist supporting this determination and a Categorical Exclusion Determination are available in the docket where indicated under **ADDRESSES**. We seek any comments or information that may lead to the discovery of a significant

environmental impact from this proposed rule.

List of Subjects in 33 CFR Part 165

Harbors, Marine safety, Navigation (water), Reporting and recordkeeping requirements, Security measures, and Waterways.

For the reasons discussed in the preamble, the Coast Guard proposes to amend 33 CFR part 165 as follows:

PART 165—REGULATED NAVIGATION AREAS AND LIMITED ACCESS AREAS

1. The authority citation for part 165 continues to read as follows:

Authority: 33 U.S.C. 1231; 46 U.S.C. Chapter 701, 3306, 3703; 50 U.S.C. 191, 195; 33 CFR 1.05–1, 6.04–1, 6.04–6, 160.5; Pub. L. 107–295, 116 Stat. 2064; Department of Homeland Security Delegation No. 0170.1.

2. Add § 165.T05–0494 to read as follows:

§ 165.T05–0494 Safety Zone For Fireworks Display, Pamlico River; Washington, NC

(a) Definitions. For the purposes of this section, *Captain of the Port* means the Commander, Sector North Carolina. *Representative* means any Coast Guard commissioned, warrant, or petty officer who has been authorized to act on the behalf of the Captain of the Port.

(b) Location. The following area is a safety zone: This safety zone will encompass all waters on the Pamlico and Tar Rivers within a 300 yard radius of the launch site on land at position latitude 35°32′25″ N, longitude 077°03′42″ W. All geographic coordinates are North American Datum 1983 (NAD 83).

(c) Regulations. (1) The general regulations contained in § 165.23 of this part apply to the area described in paragraph (b) of this section.

(2) Persons or vessels requiring entry into or passage through any portion of the safety zone must first request authorization from the Captain of the Port, or a designated representative, unless the Captain of the Port previously announced via Marine Safety Radio Broadcast on VHF Marine Band Radio channel 22 (157.1 MHz) that this regulation will not be enforced in that portion of the safety zone. The Captain of the Port can be contacted at telephone number (910) 343–3882 or by radio on VHF Marine Band Radio, channels 13 and 16.

(d) Enforcement. The U.S. Coast Guard may be assisted in the patrol and enforcement of the zone by Federal, State, and local agencies.

(e) Enforcement period. This section will be enforced from 8 p.m. to 10 p.m. on September 22, 2012 unless cancelled earlier by the Captain of the Port.

Dated: June 8, 2012.

A. Popiel,

Captain, U.S. Coast Guard, Captain of the Port North Carolina.

[FR Doc. 2012–15112 Filed 6–20–12; 8:45 am]

BILLING CODE 9110–04–P

ENVIRONMENTAL PROTECTION AGENCY

40 CFR Part 52

[EPA–R09–OAR–2012–0252; FRL–9687–4]

Revisions to the California State Implementation Plan, South Coast Air Quality Management District; San Joaquin Valley Unified Air Pollution Control District

AGENCY: Environmental Protection Agency (EPA).

ACTION: Proposed rule.

SUMMARY: EPA is proposing to approve revisions to the South Coast Air Quality Management District (SCAQMD) and the San Joaquin Valley Unified Air Pollution Control District (SJVUAPCD) portions of the California State Implementation Plan (SIP). These revisions concern volatile organic compound (VOC) emissions from chipping and grinding activities, and composting operations. We are approving local rules that regulate these emission sources under the Clean Air Act as amended in 1990 (CAA or the Act). We are taking comments on this proposal and plan to follow with a final action.

DATE: Any comments must arrive by July 23, 2012.

ADDRESSES: Submit comments, identified by docket number EPA–R09–OAR–2012–0252, by one of the following methods:

1. *Federal eRulemaking Portal: www.regulations.gov.* Follow the on-line instructions.

2. *Email: steckel.andrew@epa.gov.*

3. *Mail or deliver:* Andrew Steckel (Air-4), U.S. Environmental Protection Agency Region IX, 75 Hawthorne Street, San Francisco, CA 94105–3901.

Instructions: All comments will be included in the public docket without change and may be made available online at www.regulations.gov, including any personal information provided, unless the comment includes Confidential Business Information (CBI) or other information whose disclosure is restricted by statute. Information that you consider CBI or otherwise protected should be clearly identified as such and should not be submitted through *www.regulations.gov* or email. *www.regulations.gov* is an ''anonymous access'' system, and EPA will not know your identity or contact information unless you provide it in the body of your comment. If you send email directly to EPA, your email address will be automatically captured and included as part of the public comment. If EPA cannot read your comment due to technical difficulties and cannot contact you for clarification, EPA may not be able to consider your comment.

Docket: Generally, documents in the docket for this action are available electronically at *www.regulations.gov* and in hard copy at EPA Region IX, 75 Hawthorne Street, San Francisco, California. While all documents in the docket are listed at *www.regulations.gov,* some information may be publicly available only at the hard copy location (e.g., copyrighted material, large maps), and some may not be publicly available in either location (e.g., CBI). To inspect the hard copy materials, please schedule an appointment during normal business hours with the contact listed in the **FOR FURTHER INFORMATION CONTACT** section.

FOR FURTHER INFORMATION CONTACT: Nancy Levin, EPA Region IX, (415) 942–3848, *levin.nancy@epa.gov.*

SUPPLEMENTARY INFORMATION: Throughout this document, ''we,'' ''us'' and ''our'' refer to EPA.

Table of Contents

I. The State's Submittal
A. What rules did the State submit?
B. Are there other versions of these rules?
C. What is the purpose of the submitted rules and rule revision?
II. EPA's Evaluation and Action
A. How is EPA evaluating the rules?
B. Do the rules meet the evaluation criteria?
C. EPA Recommendations To Further Improve the Rules.
D. Public Comment and Final Action.
III. Statutory and Executive Order Reviews

I. The State's Submittal

A. What rules did the State submit?

Table 1 lists the rules addressed by this proposal with the dates that they were adopted by the local air agencies and submitted by the California Air Resources Board.

TABLE 1—SUBMITTED RULES

Local agency	Rule No.	Rule title	Adopted or amended	Submitted
SCAQMD	1133.1	Chipping and Grinding Activities	7–8–11	11–18–11
SCAQMD	1133.3	Emission Reductions from Greenwaste Composting Operations	7–8–11	11–18–11
SJVUAPCD	4566	Organic Material Composting Operations	8–18–11	11–18–11

On December 22, 2011, EPA determined that the submittal for SCAQMD and SJVUAPCD met the completeness criteria in 40 CFR part 51 Appendix V, which must be met before formal EPA review. On January 10, 2012, EPA partially approved and partially disapproved the RACT SIP submitted by California on June 18, 2009, for the SJV extreme ozone nonattainment area (2009 RACT SIP), based in part on our conclusion that the State had not fully satisfied CAA section 182 RACT requirements for certain source categories, including organic material composting operations. See 77 FR 1417 (January 10, 2012). At that time, EPA had not yet made a RACT determination for this source category. Final approval of Rule 4566 would satisfy California's obligation to implement RACT under CAA section 182 for this source category for the 1-hour ozone and 1997 8-hour ozone NAAQS.

B. Are there other versions of these rules?

There are no previous versions of SCAQMD Rule 1133.3 and SJVUAPCD Rule 4456 in the SIP. We approved an earlier version of SCAQMD Rule 1133.1 into the SIP on July 21, 2004 (69 FR 43518).

C. What is the purpose of the submitted rules and rule revisions?

VOCs help produce ground-level ozone and smog, which harm human health and the environment. Section 110(a) of the CAA requires States to submit regulations that control VOC emissions. The purpose of SCAQMD Rule 1133.1 is to prevent inadvertent decomposition associated with chipping and grinding activities, including stockpile operations. This rule applies to operators of chipping and grinding activities that produce materials other than active or finished compost, unless otherwise exempted. The purpose of SCAQMD Rule 1133.3 is to reduce fugitive emissions of VOCs and ammonia occurring during greenwaste composting operations. This rule applies to the operators of all new and existing greenwaste composting operations that produce active or finished compost from greenwaste by itself or greenwaste in combination with manure or foodwaste, unless otherwise exempted. The purpose of SJVUAPCD Rule 4566 is to limit emissions of VOC from composting operations, and it applies to composting facilities that compost and/or stockpile organic material.

EPA's technical support documents (TSD) have more information about these rules.

II. EPA's Evaluation and Action

A. How is EPA evaluating the rules?

Generally, SIP rules must be enforceable (see section 110(a) of the Act), must require Reasonably Available Control Technology (RACT) for each category of sources covered by a Control Techniques Guidelines (CTG) document as well as each major source in nonattainment areas (see sections 182(a)(2) and (b)(2)), and must not relax existing requirements (see sections 110(l) and 193). The SCAQMD and SJVUAPCD regulate ozone nonattainment areas (see 40 CFR part 81) and the proposed regulations should be sufficiently stringent to implement RACT-level controls.

Guidance and policy documents that we use to evaluate enforceability and RACT requirements consistently include the following:

1. ''Issues Relating to VOC Regulation Cutpoints, Deficiencies, and Deviations,'' EPA, May 25, 1988 (the Bluebook).
2. ''Guidance Document for Correcting Common VOC & Other Rule Deficiencies,'' EPA Region 9, August 21, 2001 (the Little Bluebook).
3. Portions of the proposed post-1987 ozone and carbon monoxide policy that concern RACT, 52 FR 45044, November 24, 1987.
4. ''State Implementation Plans, General Preamble for the Implementation of Title I of the Clean Air Amendments of 1990,'' 57 FR 13498, April 16, 1992.
5. ''Preamble, Final Rule To Implement the 8-Hour Ozone National Ambient Air Quality Standard,'' 70 FR 71612, November 29, 2005.
6. ''Reasonably Available Control Technology (RACT) Demonstration for Ozone State Implementation Plans (SIP)'' SJVUAPCD, April 16, 2009.
7. Letter from William T. Hartnett to Regional Air Division Directors, ''RACT Qs & As—Reasonable Available Control Technology (RACT): Questions and Answers,'' EPA, May 18, 2006.

B. Do the rules meet the evaluation criteria?

We believe these rules are consistent with the relevant policy and guidance regarding enforceability, RACT, and SIP relaxations. The rules' applicability and requirements are clearly stated. They contain test methods to demonstrate compliance. Alternative methods to meet compliance must be approved by EPA. Based on our analysis, EPA believes the proposed regulations are sufficiently stringent to implement RACT-level controls. Given the lack of regulatory history regarding greenwaste composting, there is not sufficient precedent to clearly define additional RACT compost controls at this time. There are no prior versions of SCAQMD Rule 1133.3 and SJVUAPCD Rule 4566 in the SIP. Their inclusion would strengthen the SIP. There is a prior version of SCAQMD Rule 1133.1 in the SIP (69 FR 43518) July 21, 2004. Overall, the amended rule appears to be more stringent than the prior version. The TSDs have more information on our evaluation.

C. EPA Recommendations to Further Improve the Rules

We recommend that the compost emission factors be reviewed and adjusted as more data become available. The estimated greenwaste compost emission factors used for SCAQMD Rule 1133.3 and SJVUAPCD Rule 4566 rule are based on the average VOC/ton of between four and six facilities in California that had a relatively wide range of results (0.85–10.03 lbs-VOC/ton).[1] We further recommend that the local agencies develop and incorporate food waste emission factors to more accurately characterize the VOC emissions from greenwaste composting that contains food material. SJVUAPCD Rule 4566 sections 5.2.1.2, 5.2.2.2, and

[1] Compost VOC Emission Factors, September 15, 2010. *http://valleyair.org/Workshops/postings/2010/9-22-10-rule4566/SJVAPCD%20Compost%20VOC%20EF%20Report%209-15-10.pdf* (SJVUACPD Workshop September 22, 2010).

5.2.3 allow APCO- and EPA-approved alternative mitigation measures that demonstrate at least 19%, 60%, or 80% reduction in VOC. However, these sections do not specify the test methods that will be used to demonstrate these VOC control efficiencies. EPA recommends that the next revision to SJVUAPCD Rule 4566 include the appropriate test methods and test protocol guidelines to determine percent VOC reduction (See, for example, South Coast Rule 1133.3). Finally, we recommend that, in order to determine compliance with the 5,000 tons per year foodwaste threshold and other percentage requirements, the SCAQMD add daily recordkeeping requirements for each type of raw material received, including the dates and amounts of the following: Foodwaste received, greenwaste received, manure received, and their monthly totals.

The TSDs describe additional rule revisions that we recommend for the next time the local agencies modify the rules but are not currently the basis for rule disapproval.

D. Public Comment and Final Action

Because EPA believes the submitted rules fulfill all relevant requirements, we are proposing to fully approve them as described in section 110(k)(3) of the Act. We will accept comments from the public on this proposal for the next 30 days. Unless we receive convincing new information during the comment period, we intend to publish a final approval action that will incorporate these rules into the federally enforceable SIP.

III. Statutory and Executive Order Reviews

Under the Clean Air Act, the Administrator is required to approve a SIP submission that complies with the provisions of the Act and applicable Federal regulations. 42 U.S.C. 7410(k); 40 CFR 52.02(a). Thus, in reviewing SIP submissions, EPA's role is to approve State choices, provided that they meet the criteria of the Clean Air Act. Accordingly, this proposed action merely proposes to approve State law as meeting Federal requirements and does not impose additional requirements beyond those imposed by State law. For that reason, this proposed action:

- Is not a ''significant regulatory action'' subject to review by the Office of Management and Budget under Executive Order 12866 (58 FR 51735, October 4, 1993);
- Does not impose an information collection burden under the provisions of the Paperwork Reduction Act (44 U.S.C. 3501 *et seq.*);
- Is certified as not having a significant economic impact on a substantial number of small entities under the Regulatory Flexibility Act (5 U.S.C. 601 *et seq.*);
- Does not contain any unfunded mandate or significantly or uniquely affect small governments, as described in the Unfunded Mandates Reform Act of 1995 (Pub. L. 104–4);
- Does not have Federalism implications as specified in Executive Order 13132 (64 FR 43255, August 10, 1999);
- Is not an economically significant regulatory action based on health or safety risks subject to Executive Order 13045 (62 FR 19885, April 23, 1997);
- Is not a significant regulatory action subject to Executive Order 13211 (66 FR 28355, May 22, 2001);
- Is not subject to requirements of Section 12(d) of the National Technology Transfer and Advancement Act of 1995 (15 U.S.C. 272 note) because application of those requirements would be inconsistent with the Clean Air Act; and
- Does not provide EPA with the discretionary authority to address disproportionate human health or environmental effects with practical, appropriate, and legally permissible methods under Executive Order 12898 (59 FR 7629, February 16, 1994).

In addition, this proposed action does not have tribal implications as specified by Executive Order 13175 (65 FR 67249, November 9, 2000), because the SIP is not approved to apply in Indian country located in the State, and EPA notes that it will not impose substantial direct costs on tribal governments or preempt tribal law.

List of Subjects in 40 CFR Part 52

Environmental protection, Air pollution control, Intergovernmental relations, Ozone, Reporting and recordkeeping requirements, Volatile organic compounds.

Authority: 42 U.S.C. 7401 *et seq.*

Dated: May 25, 2012.

Jared Blumenfeld,

Regional Administrator, Region IX.

[FR Doc. 2012–15196 Filed 6–20–12; 8:45 am]

BILLING CODE 6560–50–P

ENVIRONMENTAL PROTECTION AGENCY

40 CFR Part 63

[EPA–HQ–OAR–2008–0708; FRL–9690–8]

RIN 2060–AQ58

National Emission Standards for Hazardous Air Pollutants for Reciprocating Internal Combustion Engines; New Source Performance Standards for Stationary Internal Combustion Engines

AGENCY: Environmental Protection Agency (EPA).

ACTION: Proposed rule; Notice of public hearing; Extension of public comment period.

SUMMARY: The EPA published in the **Federal Register** on June 7, 2012, the proposed rule, ''National Emission Standards for Hazardous Air Pollutants for Reciprocating Internal Combustion Engines; New Source Performance Standards for Stationary Internal Combustion Engines.'' The EPA was asked to hold a public hearing. Therefore, the EPA is making two announcements: First, a public hearing for the proposed, ''National Emission Standards for Hazardous Air Pollutants for Reciprocating Internal Combustion Engines; New Source Performance Standards for Stationary Internal Combustion Engines'' will be held on July 10, 2012, and second, the comment period for the proposed rule will be extended until August 9, 2012.

DATES: The public hearing will be held on July 10, 2012. Comments must be received by August 9, 2012.

ADDRESSES: The public hearing will be held in Room 1152 EPA East, 1201 Constitution Avenue NW., Washington, DC 20460, (202) 564–1657.

The public hearing will convene at 10:00 a.m. and will continue until 4:00 p.m. A lunch break is scheduled from 12:00 p.m. until 1:00 p.m. The EPA's Web site for the rulemaking, which includes the proposal and information about the hearing, can be found at: *http://www.epa.gov/ttn/atw/rice/ricepg.html.*

FOR FURTHER INFORMATION CONTACT: If you would like to present oral testimony at the public hearing, please contact Ms. Pamela Garrett, U.S. Environmental Protection Agency, Office of Air Quality Planning and Standards, Sector Policies and Programs Division (D243–01), Research Triangle Park, North Carolina 27711; telephone: (919) 541–7966; fax number: (919) 541–5450; email address: *garrett.pamela@epa.gov* (preferred

method for registering). The last day to register to present oral testimony in advance will be Friday, July 6, 2012. If using email, please provide the following information: The time you wish to speak (morning or afternoon), name, affiliation, address, email address and telephone and fax numbers. Time slot preferences will be given in the order requests are received. Additionally, requests to speak will be taken the day of the hearing at the hearing registration desk, although preferences on speaking times may not be able to be fulfilled. If you require the service of a translator, please let us know at the time of registration.

Questions concerning the proposed rule should be addressed to Ms. Melanie King, Office of Air Quality Planning and Standards, Sector Policies and Programs Division (D243–01), Environmental Protection Agency, Research Triangle Park, North Carolina 27711; telephone number: (919) 541–2469; facsimile number: (919) 541–5450; email address: *king.melanie@epa.gov.*

Public hearing: The proposal for which the EPA is holding the public hearing was published in the **Federal Register** on June 7, 2012, and is available at: *http://www.gpo.gov/fdsys/pkg/FR-2012-06-07/pdf/2012-13193.pdf* and also in the docket identified below. The public hearing will provide interested parties the opportunity to present oral comments regarding the EPA's proposed standards, including data, views or arguments concerning the proposal. The EPA may ask clarifying questions during the oral presentations, but will not respond to the presentations at that time. Written statements and supporting information submitted during the comment period will be considered with the same weight as any oral comments and supporting information presented at the public hearing.

Commenters should notify Ms. Garrett if they will need specific equipment or if there are other special needs related to providing comments at the public hearing. The EPA will provide equipment for commenters to make computerized slide presentations if we receive special requests in advance. Oral testimony will be limited to 5 minutes for each commenter. The EPA encourages commenters to submit to the docket a copy of their oral testimony electronically (via email or CD) or in hard copy form.

The public hearing schedule, including lists of speakers, will be posted on the EPA's Web site at: *http://www.epa.gov/ttn/atw/rice/ricepg.html.* A verbatim transcript of the hearing and written statements will be included in the docket for the rulemaking. The EPA will make every effort to follow the schedule as closely as possible on the day of the hearing; however, please plan for the hearing to run either ahead of schedule or behind schedule.

How can I get copies of this document and other related information?

The EPA has established a docket for the proposed rule,

''National Emission Standards for Hazardous Air Pollutants for Reciprocating Internal Combustion Engines; New Source Performance Standards for Stationary Internal Combustion Engines'' under Docket ID No. EPA–HQ–OAR–2008–0708, available at *www.regulations.gov.*

List of Subjects in 40 CFR Part 63

Environmental protection, Administrative practice and procedure, Air pollution control, Hazardous substances, Intergovernmental relations, Reporting and recordkeeping requirements.

Dated: June 15, 2012.

Mary E. Henigin,

Acting Director, Office of Air Quality Planning and Standards.

[FR Doc. 2012–15206 Filed 6–20–12; 8:45 am]

BILLING CODE 6560–50–P

FEDERAL COMMUNICATIONS COMMISSION

47 CFR Parts 1 and 64

[CG Docket No. 12–129; FCC 12–56]

Implementation of the Middle Class Tax Relief and Job Creation Act of 2012; Establishment of a Public Safety Answering Point Do-Not-Call Registry

AGENCY: Federal Communications Commission.

ACTION: Proposed rule.

SUMMARY: In this document, the Commission initiates a proceeding to create a Do-Not-Call registry for public safety answering points (PSAPs) as required by the ''Middle Class Tax Relief and Job Creation Act of 2012'' (Tax Relief Act). Specifically, section 6507 of the Tax Relief Act requires the Commission, among other things, to establish a registry that allows PSAPs to register telephone numbers on a Do-Not-Call list and prohibit the use of automatic dialing equipment to contact those numbers. Therefore, the Commission seeks comment on a variety of issues relating to the establishment and ongoing management of the PSAP registry. The proposed rules are designed to address concerns about the use automatic dialing equipment, which can generate large numbers of phone calls in a short period of time, tie up public safety lines, divert critical responder resources away from emergency services, and impede access by the public to emergency lines.

DATES: Interested parties may file comments on or before July 23, 2012. Reply comments are due on or before August 6, 2012.

ADDRESSES: You may submit comments, identified by CG Docket No. 12–129, by any of the following methods:

Electronic Filers: Comments may be filed electronically using the Internet by accessing the Commission's Electronic Comment Filing System (ECFS), through the Commission's Web site: *http://fjallfoss.fcc.gov/ecfs2/.* Filers should follow the instructions provided on the Web site for submitting comments. For ECFS filers, in completing the transmittal screen, filers should include their full name, U.S. Postal service mailing address, and CG Docket No. 12–129.

Paper Filers: Parties who choose to file by paper must file an original and four copies of each filing. Filings can be sent by hand or messenger delivery, by commercial overnight courier, or by first-class or overnight U.S. Postal Service mail (although the Commission continues to experience delays in receiving U.S. Postal Service mail). All filings must be addressed to the Commission's Secretary, Office of the Secretary, Federal Communications Commission.

All hand-delivered or messenger-delivered paper filings for the Commission's Secretary must be delivered to FCC Headquarters at 445 12th St. SW., Room TW–A325, Washington, DC 20554. The filing hours are 8:00 a.m. to 7:00 p.m. All hand deliveries must be held together with rubber bands or fasteners. Any envelopes and boxes must be disposed of *before* entering the building.

Commercial overnight mail (other than U.S. Postal Service Express Mail and Priority Mail) must be sent to 9300 East Hampton Drive, Capitol Heights, MD 20743. U.S. Postal Service first-class, Express, and Priority mail must be addressed to 445 12th Street SW., Washington, DC 20554.

In addition, parties must serve one copy of each pleading with the Commission's duplicating contractor, Best Copy and Printing, Inc., 445 12th Street SW., Room CY–B402, Washington, DC 20554, or via email to *fcc@bcpiweb.com.*

For detailed instructions for submitting comments and additional

information on the rulemaking process, see the **SUPPLEMENTARY INFORMATION** section of this document.

FOR FURTHER INFORMATION CONTACT: Richard D. Smith, Consumer and Governmental Affairs Bureau, Policy Division, at (717) 338–2797 (voice), or email *Richard.Smith@fcc.gov.*

SUPPLEMENTARY INFORMATION: This is a summary of the Commission's Notice of Proposed Rulemaking (*NPRM*), FCC 12–56, adopted on May 21, 2012, and released on May 22, 2012, in CG Docket No. 12–129. The full text of the *NPRM* and copies of any subsequently filed documents in this matter will be available for public inspection and copying via ECFS, and during regular business hours at the FCC Reference Information Center, Portals II, 445 12th Street SW., Room CY–A257, Washington, DC 20554. They may also be purchased from the Commission's duplicating contractor, Best Copy and Printing, Inc., Portals II, 445 12th Street SW., Room CY–B402, Washington, DC 20554, telephone: (202) 488–5300, fax: (202) 488–5300, or Internet: *www.bcpiweb.com.* This document can also be downloaded in Word or Portable Document Format (''PDF'') at *http://www.fcc.gov/document/fcc-initiates-proceeding-create-public-safety-do-not-call-registry.* To request materials in accessible formats for people with disabilities (Braille, large print, electronic files, audio format), send an email to *fcc504@fcc.gov* or call the Consumer and Governmental Affairs Bureau at 202–418–0530 (voice), 202–418–0432 (TTY).

Pursuant to 47 CFR 1.1200 *et seq.,* this matter shall be treated as a ''permit-but-disclose'' proceeding in accordance with the Commission's ex parte rules. Persons making ex parte presentations must file a copy of any written presentation or a memorandum summarizing any oral presentation within two business days after the presentation (unless a different deadline applicable to the Sunshine period applies). Persons making oral ex parte presentations are reminded that memoranda summarizing the presentation must: (1) List all persons attending or otherwise participating in the meeting at which the ex parte presentation was made; and (2) summarize all data presented and arguments made during the presentation. If the presentation consisted in whole or in part of the presentation of data or arguments already reflected in the presenter's written comments, memoranda, or other filings in the proceeding, the presenter may provide citations to such data or arguments in his or her prior comments, memoranda, or other filings (specifying the relevant page and/or paragraph numbers where such data or arguments can be found) in lieu of summarizing them in the memorandum. Documents shown or given to Commission staff during ex parte meetings are deemed to be written ex parte presentations and must be filed consistent with § 1.1206(b) of the Commission's rules. In proceedings governed by § 1.49(f) or for which the Commission has made available a method of electronic filing, written ex parte presentations and memoranda summarizing oral ex parte presentations, and all attachments thereto, must be filed through the electronic comment filing system available for that proceeding, and must be filed in their native format (e.g., .doc, .xml, .ppt, searchable .pdf). Participants in this proceeding should familiarize themselves with the Commission's ex parte rules. People with disabilities: To request materials in accessible formats for people with disabilities (braille, large print, electronic files, audio format), send an email to *fcc504@fcc.gov* or call the Consumer and Governmental Affairs Bureau at 202–418–0530 (voice), 202–418–0432 (TTY).

Initial Paperwork Reduction Act of 1995

The *NPRM* seeks comment on potential new information collection requirement. If the Commission adopts any new information collection requirements, the Commission will publish another notice in the **Federal Register** inviting the public to comment on the requirements, as required by the Paperwork Reduction Act of 1995, Public Law 104–13 (44 U.S.C. 3501–3520). In addition, pursuant to the Small Business Paperwork Relief Act of 2002, Public Law 107–198, *see* 44 U.S.C. 3506(c)(4), the Commission seeks comment on how it might ''further reduce the information collection burden for small business concerns with fewer than 25 employees.''

Synopsis

1. In the *NPRM,* the Commission proposes rules to create a specialized Do-Not-Call registry for PSAPs and prohibit the use of automatic dialing equipment to contact those numbers pursuant to the requirements of section 6507 of the Tax Relief Act. Specifically, the Commission seeks comment on the most efficient means of establishing a PSAP Do-Not-Call registry, the process for accessing the registry by operators of automatic dialing equipment, safeguards to protect the registry from unauthorized disclosure or dissemination, rules to prohibit the use of automatic dialing equipment to contact numbers on the registry, and the enforcement provisions contained in section 6507(c) of the Tax Relief Act. In particular, the Commission seeks comment on the costs and benefits of the proposals, including from interested parties that have experience with the National Do-Not-Call registry.

Establishment of a PSAP Do-Not-Call Registry

2. The Commission proposes to create a PSAP Do-Not-Call registry and seek comment on the structure and operation of the proposed registry. Specifically, the Commission seeks comment on the most efficient means of establishing a PSAP Do-Not-Call registry, the process for accessing the registry by operators of automatic dialing equipment, safeguards to protect the registry from unauthorized disclosure or dissemination, rules to prohibit the use of automatic dialing equipment to contact numbers on the registry, and the enforcement provisions contained in section 6507(c) of the Tax Relief Act. In particular, the Commission seeks comment on the costs and benefits of the proposals to implement the various provisions of section 6507.

3. The Commission proposes that PSAPs should be given substantial discretion to designate which numbers to include on the PSAP Do-Not-Call registry so long as they are associated with the provision of emergency services or communications with other public safety agencies. In addition, the Commission proposes that secondary PSAPs should also be permitted to place numbers on the registry. Secondary PSAPs are also vulnerable to autodialed calls in the same way as primary PSAPs.

4. The Commission seeks comment on the best and most efficient way to acquire and verify the PSAP numbers that will be entered into the registry. Are there ways to compile these numbers in an aggregate form from states or localities to minimize burdens on the PSAPs and the administrator of the registry?

5. Alternatively, should individual PSAPs register the telephone numbers that they wish to include on the registry? If so, what is the best method for PSAPs to transmit such numbers for inclusion on the registry? Who should be authorized to submit the telephone numbers to be entered into the registry on behalf of a PSAP? The Commission notes that section 6507(b)(1) of the Tax Relief Act makes reference to ''verified'' PSAP ''administrators or managers.'' What manner of PSAP employee should constitute an ''administrator or

manager'' for purposes of this provision?

6. The Commission seeks comment on the most efficient and effective way to establish and maintain the PSAP Do-Not-Call registry. As noted throughout this Notice, the FTC has administered through a contractor the National Do-Not-Call registry for nearly a decade. The Commission seeks comment on whether and, if so, to what extent, the FTC's approach is a useful and cost effective model for the PSAP registry. The Commission also asks whether there are ways in which the two agencies could cooperate in order to lessen the costs involved in establishing the new PSAP registry and, if so, how the Commission would calculate and fund its share of the cost of an inter-agency effort.

7. What process should be implemented to allow for verification in accordance with section 6507(b)(2) that the registered numbers should continue to appear on the registry? Should there be an ongoing means for PSAPs to remove numbers from the registry at any time? The Commission seeks comment on these and any other issues related to verification of registered numbers pursuant to section 6507(b)(2) of the Tax Relief Act.

Access to the Registry by Operators of Automatic Dialing Equipment

8. The Commission seeks comment on the most efficient and effective way to grant and track access to the PSAP Do-Not-Call registry. The Commission proposes that registry access be limited to operators of automatic dialing equipment for the limited purpose of compliance with the prohibition on contacting PSAP numbers in the registry. The Commission proposes that anyone who uses an ''automatic telephone dialing system,'' as defined in section 227(a)(1) of the Communications Act, to make calls qualifies as an operator of ''automatic dialing'' or ''robocall'' equipment for purposes of the Tax Relief Act. The Commission seeks comment on these proposals and any other issues that are relevant to our implementation of section 6507(b)(3) of the Tax Relief Act.

9. Consistent with the operation of the existing National Do-Not-Call registry, the Commission proposes to require that any entity that accesses the PSAP registry certify, under penalty of law, that it is accessing the registry solely to determine whether any telephone numbers to which it intends to place autodialed calls are listed on such registry for the purpose of complying with section 6507 of the Tax Relief Act. The Commission proposes to prohibit use of the registry by operators of automatic dialing equipment for any other purpose. The Commission proposes that the first time an operator of automatic dialing equipment accesses the registry, the operator establish a profile and provide identifying information about its organization that would include the operator's name and all alternative names under which the registrant operates, a business address, a contact person, the contact person's telephone number and email address, and a list of all outbound telephone numbers used for autodialing. The Commission proposes that all information be updated within 30 days of the date on which any change occurs. The Commission proposes that every operator of automatic dialing equipment with access to the PSAP registry be given a unique identification number, which must be submitted each time the secure database is accessed. The Commission also proposes that this number be used to grant and track access to the secure database of registered PSAP numbers.

10. Once operators of automatic dialing equipment have successfully registered and obtained a unique identification number, the Commission seeks comment on how the registered telephone numbers should be made accessible to them. Does the FTC's National Do-Not-Call registry provide a useful model for these steps? How often should operators of automatic dialing equipment be required to access the registry of PSAP numbers and update their calling lists to delete registered PSAP numbers?

Protecting the Registry From Unauthorized Disclosure or Dissemination

11. The Commission proposes to adopt a rule that would prohibit parties from selling, renting, leasing, purchasing, or using the PSAP registry, or any part thereof, for any purpose except compliance with this section and any state or Federal law enacted to prevent autodialed calls to telephone numbers in the registry. In addition, we propose safeguards designed to limit and track access to the registry, including a requirement that operators of automatic dialing equipment certify, under penalty of law, that they are accessing the registry solely to prevent autodialed calls to numbers on the registry.

12. The Commission proposes that access to the registered numbers be limited to operators of automated dialing equipment who have complied with the authorized process to obtain access to that information. However, the Commission seeks comment on whether there is any reason that the third parties on whose behalf autodialed calls are made should have access to these numbers. Does section 6507(b)(4) of the Tax Relief Act prohibit such third parties from being provided access to these numbers? The Commission seeks comment on this proposal and any other issues relevant to our implementation of section 6507(b)(4) of the Tax Relief Act.

Prohibiting the Use of Automatic Dialing or ''Robocall'' Equipment to Contact Registered PSAP Numbers

13. The Commission proposes to prohibit operators of automatic dialing or robocall equipment from contacting any PSAP number that has been registered on the PSAP Do-Not-Call registry. The Commission notes that the it has concluded in the Telephone Consumer Protection Act (TCPA) context, under section 227 of the Communications Act, that the prohibition on using autodialers to contact emergency telephone lines encompasses both voice and text calls, including short message service calls. Similarly, the Commission proposes that the use of an autodialer to make either voice or text message calls to numbers on the PSAP registry constitutes a prohibited contact under section 6507(b)(5) of the Tax Relief Act.

14. The Commission proposes to use the TCPA's definition, and the Commission's relevant interpretations of that term, for purposes of determining the meaning of ''automatic dialing'' and ''robocall'' equipment in the Tax Relief Act. The Commission seeks comment on the implications, if any, of using the terms ''automatic dialing'' or ''robocall'' as used in the Tax Relief Act synonymously with ''automatic telephone dialing system'' in the TCPA, given that the latter term includes systems with the capacity to store and produce numbers. The Commission seeks comment on these proposals and any other issues relevant to our implementation of section 6507(b)(5) of the Tax Relief Act.

15. The Commission also seeks comment on whether there are any situations in which PSAPs may wish to receive an autodialed call.

Enforcement

16. The Commission proposes to amend section 1.80 of its rules governing forfeiture proceedings and forfeiture amounts to incorporate these new enforcement provisions specifically for the purposes of implementing section 6507 of the Tax Relief Act.

17. The Commission seeks comment on how the enforcement provisions,

including the monetary penalties, of the Tax Relief Act should be implemented consistent with the Communications Act. The Commission seeks comment on whether section 6507(c)(3) of the Tax Relief Act requires the Commission to impose monetary penalties upon a first violation, or whether section 503(b)(5) of the Communications Act, which is also applicable to section 6507 of the Tax Relief Act by virtue of section 6003(a) of the Tax Relief Act, requires the Commission to issue a citation first to non-licensee and non-applicant violators before it may determine liability for a monetary forfeiture.

18. The Commission proposes to adopt the specific monetary penalties for violations of sections 6507(b)(4) and (b)(5) of the Tax Relief Act and otherwise treat any violations of those provisions as violations of the Communications Act. Section 6507(c)(3) of the Tax Relief Act provides for the imposition of fines that vary depending ''upon whether the conduct leading to the violation was negligent, grossly negligent, reckless, or willful, and depending on whether the violation was a first or subsequent offence.'' The Commission seeks comment on how these terms should be interpreted in determining the monetary penalties for violations of the Tax Relief Act. To the extent that the Commission has addressed such terms in an enforcement context, it seeks comment on whether to adopt those definitions for purposes of the Tax Relief Act.

19. The Commission seeks comment on whether it should establish a safe harbor provision for operators of automatic dialing equipment who can demonstrate that any prohibited call to or disclosure of the registered numbers is the result of an error despite routine business practices designed to ensure compliance.

Initial Regulatory Flexibility Analysis

20. As required by the Regulatory Flexibility Act of 1980, as amended, (RFA), the Commission has prepared this Initial Regulatory Flexibility Analysis (IRFA) of the possible significant economic impact on a substantial number of small entities by the policies and rules proposed in the *NPRM.* Written public comments are requested on the IRFA. Comments must be identified as responses to the IRFA and must be filed by the deadlines for comments on the *NPRM* provided on the first page of this document. The Commission will send a copy of the *NPRM,* including the *IRFA,* to the Chief Counsel for Advocacy of the Small Business Administration.

Need for, and Objectives of, the Proposed Rules

21. The ''Middle Class Tax Relief and Job Creation Act of 2012'' requires the Commission to establish a registry that allows PSAPs to register telephone numbers on a Do-Not-Call list and prohibits the use of automatic dialing or ''robocall'' equipment to contact those numbers. This requirement is designed to address concerns about the use of autodialers, which can generate large numbers of phone calls, to tie up public safety lines, and divert critical responder resources away from emergency services. Operators of automatic dialing equipment, which may include small businesses, will be required to provide certain contact information to obtain access to a registry of PSAP telephone numbers. Such operators must periodically update the list of registered numbers and take measures to ensure that they do not use such automatic dialing equipment to contact any number listed on that registry or disclose the registered numbers to any other party.

Legal Basis

22. The legal basis for any actions that may be taken pursuant to the *NPRM* are contained in sections 1, 2, 4(i), 227 and 503 of the Communications Act of 1934, as amended, 47 U.S.C. 151, 152, 154(i), 227, and 503 and sections 6003 and 6507 of the Middle Class Tax Relief and Job Creation Act of 2012. In particular, section 6507 of the Middle Class Tax Relief and Job Creation Act of 2012 requires the Commission to ''initiate a proceeding to create a specialized Do-Not-Call registry for public safety answering points.''

Description and Estimate of the Number of Small Entities to Which the Proposed Rules Will Apply

23. The RFA directs agencies to provide a description of, and where feasible, an estimate of the number of small entities that will be affected by the proposed rules, if adopted. The RFA generally defines the term ''small entity'' as having the same meaning as the terms ''small business,'' ''small organization,'' and ''small governmental jurisdiction.'' In addition, the term ''small business'' has the same meaning as the term ''small business concern'' under the Small Business Act. Under the Small Business Act, a ''small business concern'' is one that: (1) Is independently owned and operated; (2) is not dominant in its field of operation; and (3) meets any additional criteria established by the Small Business Administration (SBA).

24. In general, our proposed rules prohibiting the use of automatic dialing equipment to contact numbers on the PSAP Do-Not-Call registry would apply to a wide range of entities. The proposed rules, in particular, would apply to all operators of automatic dialing equipment. Therefore, the Commission expects that the proposals in this proceeding could have a significant economic impact on a substantial number of small entities. Determining the precise number of small entities that would be subject to the requirements proposed in the *NPRM,* however, is not readily feasible. Therefore, the Commission invites comment on such number and, after evaluating the comments, will examine further the effect of any rule changes on small entities in the Final Regulatory Flexibility Analysis. Below, the Commission has described some current data that are helpful in describing the number of small entities that might be affected by our proposed action, if adopted.

25. Nationwide, there are a total of approximately 29.6 million small businesses, according to the SBA. A ''small organization'' is generally ''any not-for-profit enterprise which is independently owned and operated and is not dominant in its field.'' Nationwide, as of 2007, there were approximately 1.6 million small organizations.

26. Small Businesses, Small Organizations, and Small Governmental Jurisdictions. The Commission's action may, over time, affect small entities that are not easily categorized at present. The Commission therefore describes here, at the outset, three comprehensive, statutory small entity size standards. First, nationwide, there are a total of approximately 27.5 million small businesses, according to the SBA. In addition, a ''small organization'' is generally ''any not-for-profit enterprise which is independently owned and operated and is not dominant in its field.'' Nationwide, as of 2007, there were approximately 1,621,315 small organizations. Finally, the term ''small governmental jurisdiction'' is defined generally as ''governments of cities, towns, townships, villages, school districts, or special districts, with a population of less than fifty thousand.'' Census Bureau data for 2011 indicate that there were 89,476 local governmental jurisdictions in the United States. The Commission estimates that, of this total, as many as 88,506 entities may qualify as ''small governmental jurisdictions.'' Thus, the Commission estimates that most governmental jurisdictions are small.

27. Telemarketing Bureaus and Other Contact Centers. According to the Census Bureau, this economic census category ''comprises establishments primarily engaged in operating call centers that initiate or receive communications for others-via telephone, facsimile, email, or other communication modes-for purposes such as (1) promoting clients' products or services, (2) taking orders for clients, (3) soliciting contributions for a client; and (4) providing information or assistance regarding a client's products or services.'' The SBA has developed a small business size standard for this category, which is: all such entities having $7 million or less in annual receipts. According to Census Bureau data for 2007, there were 2,100 firms in this category that operated for the entire year. Of this total, 1,885 firms had annual sales of under $5 million, and an additional 145 had sales of $5 million to $9,999,999. Thus, the majority of firms in this category can be considered small.

Description of Projected Reporting, Recordkeeping, and Other Compliance Requirements

28. The Tax Relief Act requires the Commission to establish a Do-Not-Call registry for PSAPs. The Act specifies that PSAPs will be permitted to register telephone numbers on this registry. This allows PSAPs or their designated representatives to review their current telephone numbers and then provide those numbers to the administrator of the registry for inclusion on the PSAP Do-Not-Call registry. This will necessitate some administrative functions. In addition, a process must be adopted for verifying, no less frequently than once every 7 years, that the registered numbers should continue to appear on the registry. This provision may require PSAPs to periodically check and verify which numbers should continue to be included on the registry. The Tax Relief Act also prohibits the use of automatic dialing or ''robocall'' equipment to contact numbers listed on the Do-Not-Call registry. As a result, operators of automatic dialing equipment will be required to periodically check the registry and update their calling systems to ensure that they do not contact any telephone number listed on the PSAP Do-Not-Call registry. In order to access the registry, operators of automatic dialing equipment will be required to provide contact information and certify that they will not use the telephone numbers for any purpose other than compliance with this Act. In addition, a process will need to be developed to ensure that the list of registered numbers obtained from the PSAP Do-Not-Call registry is not disclosed or disseminated for any purpose other than compliance with this Act. Such a process may entail training personnel, recording access to such information in a secure manner, and updating automatic dialing systems to ensure that such equipment is not used to contact numbers on the PSAP registry.

Steps Taken To Minimize Significant Economic Impact on Small Entities, and Significant Alternatives Considered

29. In the *NPRM,* the Commission has sought comment generally on how to implement the specific provisions of the Tax Relief Act in a cost-effective manner that minimizes the potential burdens on PSAPs and any operator of automatic dialing equipment subject to our rules. The Commission notes, for example, that the FTC's National Do-Not-Call list has been operational for nearly a decade. Many operators of automatic dialing equipment subject to our proposed rules are familiar with that system and the Commission seeks comment on whether the operation of that existing registry provides any guidance on how the PSAP registry should be operated in order to minimize compliance burdens. The Commission seeks comment on whether it would be useful to offer such operators the ability to gain access to the PSAP registry by specific geographic areas or area codes rather than downloading the entire database. This option could offer smaller businesses cost savings by limiting the telephone numbers which they must download to only those that are most relevant to the calls they are making. The Commission also seeks comment on whether to establish a safe harbor provision for those who can demonstrate that any prohibited call or disclosure of the registered PSAP numbers is the result of an error despite routine business practices designed to ensure compliance. In addition, the Commission seeks comment on the most efficient ways for PSAPs to compile and download the numbers which they want to enter into the PSAP registry. For example, to alleviate potential burdens on individual PSAPs, the Commission seeks comment on whether states or localities can do this on an aggregate basis or whether there are existing databases of such information.

Federal Rules That May Duplicate, Overlap, or Conflict With the Proposed Rules

30. The TCPA prohibits certain categories of automated calls absent an emergency purpose or the ''prior express consent'' of the called party. 47 U.S.C. 227(b)(1)(A). Specifically, this provision prohibits the use of ''automatic telephone dialing systems'' when calling any emergency telephone lines, including 911 lines and any emergency line of a hospital, medical physician or service office, health care facility, poison control center, or fire protection or law enforcement agency. 47 U.S.C. 227(b)(1)(A). *See also* 47 CFR 64.1200(a)(1). As a result, the use of autodialers to call these numbers is prohibited under our existing rules absent a recognized exception. To the extent that any of the same emergency numbers are included in the PSAP Do-Not-Call registry, the protections afforded by our proposed rules from autodialed calls will overlap with the existing TCPA rules.

Ordering Clauses

31. Pursuant to sections 1, 2, 4(i), 227 and 503 of the Communications Act of 1934, as amended, 47 U.S.C. 151, 152, 154(i), 227, 503, and sections 6003 and 6507 of the Middle Class Tax Relief and Job Creation Act of 2012, that the Notice of Proposed Rulemaking *is adopted.*

32. The Commission's Consumer and Governmental Affairs Bureau, Reference Information Center, *shall send* a copy of the Notice of Proposed Rulemaking, including the Initial Regulatory Flexibility Analysis, to the Chief Counsel for Advocacy of the Small Business Administration.

List of Subjects

47 CFR Part 1

Administrative practice and procedure.

47 CFR Part 64

Reporting and recordkeeping requirements, Telecommunications, Telephone.

Federal Communications Commission.

Marlene H. Dortch,

Secretary.

Proposed Rule

For the reasons discussed in the preamble, the Federal Communications Commission proposes to amend parts 1 and 64 as follows:

PART 1—PRACTICE AND PROCEDURE

Subpart A—General Rules of Practice and Procedure

1. The authority citation part 1 is revised to read as follows:

Authority: 15 U.S.C. 79 *et seq.;* 47 U.S.C. 151, 154(i), 154(j), 155, 157, 225, 227, 303(r), and 309 and the Middle Class Tax Relief and

Job Creation Act of 2012, Pub. L. No. 112–96.

2. Amend section 1.80 by adding new paragraph (a)(6), redesignating paragraphs (b)(5) and (b)(6) as paragraphs (b)(7) and (b)(8), and by add new paragraphs (b)(5) and (b)(6) to read as follows:

§ 1.80 Forfeiture proceedings.

(a) * * *

(6) Violated any provision of section 6507 of the Middle Class Tax Relief and Job Creation Act of 2012 or any rule, regulation, or order issued by the Commission under that statute.

* * * * *

(b) * * *

(5) If a violator who is granted access to the Do-Not-Call registry of public safety answering points discloses or disseminates any registered telephone number without authorization, in violation of section 6507(b)(4) of the Middle Class Tax Relief and Job Creation Act of 2012, the monetary penalty for such unauthorized disclosure or dissemination of a telephone number from the registry shall be not less than $100,000 per incident nor more than $1,000,000 per incident depending upon whether the conduct leading to the violation was negligent, grossly negligent, reckless, or willful, and depending on whether the violation was a first or subsequent offense.

(6) If a violator uses automatic dialing equipment to contact a telephone number on the Do-Not-Call registry of public safety answering points, in violation of section 6507(b)(5) of the Middle Class Tax Relief and Job Creation Act of 2012, the monetary penalty for contacting such a telephone number shall be not less than $10,000 per call nor more than $100,000 per call depending on whether the violation was negligent, grossly negligent, reckless, or willful, and depending on whether the violation was a first or subsequent offense.

* * * * *

PART 64—MISCELLANEOUS RULES RELATING TO COMMON CARRIERS

Subpart L—Restrictions on Telemarketing and Telephone Solicitation

1. The authority citation for part 64 is revised to read as follows:

Authority: 47 U.S.C. 154, 254(k); 403(b)(2)(B), (c), Pub. L. 104–104, 110 Stat. 56. Interpret or apply 47 U.S.C. 201, 218, 222, 225, 226, 227, 228, 254(k), 616, 620 and the Middle Class Tax Relief and Job Creation Act of 2012, Pub. L. No. 112–96 unless otherwise noted.

2. Amend Subpart L by adding new section 64.1202 to read as follows:

§ 64.1202 Public safety answering point do-not-call registry.

(a) As used in this section, the following terms are defined as:

(1) *Operators of automatic dialing or robocall equipment.* Any person or entity who uses an automatic telephone dialing system, as defined in section 227(a)(1) of the Communications Act of 1934, as amended, to make telephone calls with such equipment.

(2) *Public Safety Answering Point (PSAP).* A facility that has been designated to receive emergency calls and route them to emergency service personnel pursuant to section 222(h)(4) of the Communications Act of 1934, as amended. As used in this section, this term includes both primary and secondary PSAPs.

(b) An operator of automatic dialing or robocall equipment is prohibited from using such equipment to contact any telephone number registered on the PSAP Do-Not-Call registry. This prohibition on using automatic dialing equipment to contact numbers on the PSAP Do-Not-Call registry encompasses both voice and text calls. Such Do-Not-Call registrations must be honored indefinitely, or until the registration is removed by a designated PSAP representative or the Commission or its designated registry administrator.

(c) An operator of automatic dialing or robocall equipment may not obtain access or use the PSAP Do-Not-Call registry until it has first provided to the Commission or its designated registry administrator contact information that includes the operator's name and all alternative names under which the registrant operates, a business address, a contact person, the contact person's telephone number and email address, and a list of all outbound telephone numbers used for autodialing, and thereafter obtained a unique identification number from the Commission or its designated registry administrator. All information provided to the Commission or its designated registry administrator must be updated within 30 days of making any change to such information. In addition, an operator must certify during each use, under penalty of law, that it is accessing the registry solely to prevent autodialed calls to numbers on the registry.

(d) An operator of automatic dialing or robocall equipment that accesses the PSAP Do-Not-Call registry shall, to prevent such calls to any telephone number on the registry, employ a version of the PSAP Do-Not-Call registry obtained from the registry administrator no more than 31 days prior to the date any call is made, and shall maintain records documenting this process.

(e) No person or entity, including an operator of automatic dialing equipment or robocall equipment, may sell, rent, lease, purchase or use the PSAP Do-Not-Call registry, or any part thereof, for any purpose except to comply with this section and any such state or Federal law enacted to prevent autodialed calls to telephone numbers in the PSAP registry. Any party granted access to the registry is prohibited from disclosing or disseminating the registered numbers to any other person or entity.

[FR Doc. 2012–15119 Filed 6–20–12; 8:45 am]

BILLING CODE 6712–01–P

DEPARTMENT OF THE INTERIOR

Fish and Wildlife Service

50 CFR Part 17

[Docket No. FWS–R4–ES–2012–0018; 4500030113]

Endangered and Threatened Wildlife and Plants; 90-Day Finding on a Petition to List the Black-Capped Petrel as Endangered or Threatened

AGENCY: Fish and Wildlife Service, Interior.

ACTION: Notice of petition finding and initiation of status review.

SUMMARY: We, the U.S. Fish and Wildlife Service (Service), announce a 90-day finding on a petition to list the black-capped petrel, *Pterodroma hasitata*, as endangered or threatened under the Endangered Species Act of 1973, as amended (Act), and to designate critical habitat in U.S. waters and territories in the South Atlantic and Caribbean region. Based on our review, we find that the petition presents substantial scientific or commercial information indicating that listing of the black-capped petrel may be warranted. Therefore, with the publication of this notice, we are initiating a review of the status of the species to determine if listing the black-capped petrel is warranted. To ensure that this status review is comprehensive, we are requesting scientific and commercial data and other information regarding this species. Based on the status review, we will issue a 12-month finding on the petition, which will address whether the petitioned action is warranted, as provided in section 4(b)(3)(B) of the Act.

DATES: To allow us adequate time to conduct this review, we request that we receive information on or before August

20, 2012. The deadline for submitting an electronic comment using the Federal eRulemaking Portal (see **ADDRESSES** section, below) is 11:59 p.m. Eastern Time on this date. After August 20, 2012, you must submit information directly to the Field Office (see **FOR FURTHER INFORMATION CONTACT** section below). Please note that we might not be able to address or incorporate information that we receive after the above requested date.

ADDRESSES: You may submit information by one of the following methods:

(1) *Electronically:* Go to the Federal eRulemaking Portal: *http://www.regulations.gov.* Search for Docket No. FWS–R4–ES–2012–0018.

(2) *By hard copy:* Submit by U.S. mail or hand-delivery to: Public Comments Processing, Attn: FWS–R4–ES–2012–0018; Division of Policy and Directives Management; U.S. Fish and Wildlife Service; 4401 N. Fairfax Drive, MS 2042–PDM; Arlington, VA 22203.

We will not accept email or faxes. We will post all information we receive on *http://www.regulations.gov.* This generally means that we will post any personal information you provide us (see the Request for Information section below for more details).

FOR FURTHER INFORMATION CONTACT: Marelisa Rivera, Deputy Field Supervisor, Caribbean Ecological Services Field Office, P.O. Box 491, Boquerón, PR 00622; by telephone at 787–851–7297; or by facsimile at 787–851–7440. If you use a telecommunications device for the deaf (TDD), please call the Federal Information Relay Service (FIRS) at 800–877–8339.

SUPPLEMENTARY INFORMATION:

Request for Information

When we make a finding that a petition presents substantial information indicating that listing a species may be warranted, we are required to promptly review the status of the species (status review). For the status review to be complete and based on the best available scientific and commercial information, we request information on the black-capped petrel from governmental agencies, Native American tribes, the scientific community, industry, and any other interested parties. We seek information on:

(1) The species' biology, range, and population trends, including:

(a) Habitat requirements for feeding, breeding, and sheltering;

(b) Genetics and taxonomy;

(c) Historical and current range, including distribution patterns;

(d) Historical and current population levels, and current and projected trends; and

(e) Past and ongoing conservation measures for the species, its habitat, or both.

(2) The factors that are the basis for making a listing determination for a species under section 4(a) of the Act (16 U.S.C. 1531 *et seq.*), which are:

(a) The present or threatened destruction, modification, or curtailment of its habitat or range;

(b) Overutilization for commercial, recreational, scientific, or educational purposes;

(c) Disease or predation;

(d) The inadequacy of existing regulatory mechanisms; or

(e) Other natural or manmade factors affecting its continued existence.

If, after the status review, we determine that listing the black-capped petrel is warranted, we will propose critical habitat (see definition in section 3(5)(A) of the Act) under section 4 of the Act, to the maximum extent prudent and determinable at the time we propose to list the species. Therefore, we also request data and information on:

(1) What may constitute ''physical or biological features essential to the conservation of the species,'' within the geographical range currently occupied by the species;

(2) Where these features are currently found;

(3) Whether any of these features may require special management considerations or protection;

(4) Specific areas outside the geographical area occupied by the species that are ''essential for the conservation of the species;'' and

(5) What, if any, critical habitat you think we should propose for designation if the species is proposed for listing, and why such habitat meets the requirements of section 4 of the Act.

Please include sufficient information with your submission (such as scientific journal articles or other publications) to allow us to verify any scientific or commercial information you include.

Submissions merely stating support for or opposition to the action under consideration without providing supporting information, although noted, will not be considered in making a determination. Section 4(b)(1)(A) of the Act directs that determinations as to whether any species is an endangered or threatened species must be made ''solely on the basis of the best scientific and commercial data available.''

You may submit your information concerning this status review by one of the methods listed in the **ADDRESSES** section. If you submit information via *http://www.regulations.gov*, your entire submission—including any personal identifying information—will be posted on the Web site. If your submission is made via a hardcopy that includes personal identifying information, you may request at the top of your document that we withhold this personal identifying information from public review. However, we cannot guarantee that we will be able to do so. We will post all hardcopy submissions on *http://www.regulations.gov.*

Information and supporting documentation that we received and used in preparing this finding is available for you to review at *http://www.regulations.gov,* or by appointment, during normal business hours, at the U.S. Fish and Wildlife Service, Caribbean Ecological Services Field Office (see **FOR FURTHER INFORMATION CONTACT**).

Background

Section 4(b)(3)(A) of the Act requires that we make a finding on whether a petition to list, delist, or reclassify a species presents substantial scientific or commercial information indicating that the petitioned action may be warranted. We are to base this finding on information provided in the petition, supporting information submitted with the petition, and information otherwise available in our files. To the maximum extent practicable, we are to make this finding within 90 days of our receipt of the petition and publish our notice of the finding promptly in the **Federal Register**.

Our standard for substantial scientific or commercial information within the Code of Federal Regulations (CFR) with regard to a 90-day petition finding is ''that amount of information that would lead a reasonable person to believe that the measure proposed in the petition may be warranted'' (50 CFR 424.14(b)). If we find that substantial scientific or commercial information was presented, we are required to promptly conduct a species status review, which we subsequently summarize in our 12-month finding.

Petition History

On September 13, 2011, we received a petition dated September 1, 2011, from Mark N. Salvo, WildEarth Guardians (WEG), requesting that the black-capped petrel be listed as endangered or threatened, and that critical habitat be designated under the Act. The petition clearly identified itself as such and included the requisite identification information for the

petitioner, required at 50 CFR 424.14(a). In a September 27, 2011, letter to Mark N. Salvo, we acknowledged receipt of the petition. This finding addresses the petition.

Previous Federal Action(s)

The black-capped petrel was included as a category 2 candidate species in the **Federal Register** notice dated November 15, 1994 (59 FR 58982). Category 2 candidates were taxa for which information was available indicating that listing was possibly appropriate, but insufficient data were available regarding biological vulnerability and threats. In the February 28, 1996, Notice of Review (61 FR 7595), we discontinued the use of multiple candidate categories and removed category 2 species from the candidate list, which removed the black-capped petrel from the candidate species list.

Species Information

The black-capped petrel (*Pterodroma hasitata*) is a seabird that ranges between 35–40 centimeters (cm) (14–16 inches (in)) in size, with mostly dusky to black upperparts and white patches on the rump, hindneck, and forehead; the crown is black and in sharp contrast with the white neck (del Hoyo *et al.* 1992, p. 238; Raffaele *et al.* 1998, pp. 216–217). The black-capped petrel is the only extant gadfly petrel (one of about 30 species of petrel in the genus Pterodroma) known to breed in the Caribbean basin (Haney 1987, p. 153). It is a colonial nesting species that nests in crevices or burrows in steep, forested mountain cliffs (Raffaele *et al.* 1998, p. 217). The black-capped petrel is nocturnal and arrives at its nesting site after sunset (Raffaele *et al.* 1998, p. 217). The black-capped petrel occurs widely in the West Indies away from its breeding grounds. It is believed to feed on squid and fish (Raffaele *et al.* 1998, p. 217).

Imber (1985, entire) recognized four subgenera within *Pterodroma,* and based on morphological characteristics, he placed *P. hasitata* within the largest subgenus, *Pterodroma.* Included in this subgenus were all other species of *Pterodroma* that breed in the North Atlantic (Bermuda petrel (*Pterodroma cahow*), Zino's petrel (*Pterodroma madeira*), Fea's petrel (*Pterodroma feae*)), as well as petrel species that breed in the South Atlantic, the South Pacific, and the southern Indian Ocean (Farnsworth 2010, p. 5).

Farnswoth (2010, p. 5) states that Howell and Patteson (2008, entire) suggested that variation in black-capped petrels may reflect multiple cryptic species, as evidenced by different plumage characteristics and different molt sequence and timing. Their discussion is the most extensive and comprehensive taxonomic evaluation to date for this species, but even they suggest that additional information is needed to understand whether this variation is a function of subpopulations, geographic variation, multiple cryptic species, molt timing, or some combination of these (Farnsworth 2010, p. 5).

We accept the characterization of the black-capped petrel as a species because Jesús *et al.* (2009, entire) investigated the phylogenetics (evolutionary relatedness) of North Atlantic gadfly petrels using both morphological characters (form and structure of the species) and mitrochondrial DNA sequences, largely confirming the monophyly (descent from a single ancestor) of this group. Within this assemblage, *Pterodroma hasitata* is ancestral to *P. cahow* and *P. feae* (Jesús *et al.* 2009, pp. 207–209). While all descended from a common ancestor, this supports separate species designations. During a recent meeting of the Black-capped Petrel Working Group (Black-capped Petrel Working Group Notes 2011, p. 2), Marcel van Tuinen stated that he and his colleagues had managed to extract and amplify DNA from over 20 black-capped petrels caught off the coast of the Outer Banks of North Carolina in the 1980s. They found fixed genetic differences between dark and light morphs of this seabird in terms of the size of the black cap, with intermediate morphs mostly falling with the light morphs. This genetic evidence points out the possibility of two distinct breeding populations of black-capped petrel; although the genetic differentiation is not large enough to consider these morphs different species, it is possible to consider them as separate populations and, perhaps, subspecies (Black-capped Petrel Working Group Notes 2011, p. 2).

Black-capped petrel populations declined throughout the 19th and 20th centuries (IUCN 2010, p. 1; Birdlife International 2011, p. 2) and were thought to be extinct in the early 1900s (Bent 1922, p. 106). Currently, there are only 13 known breeding colonies and an estimated 600–2,000 breeding pairs (Schreiber and Lee 2000, p. 6; Birdlife International 2011, p. 1). While historically the black-capped petrel had breeding colonies throughout the Caribbean region, current breeding populations are known only on the island of Hispaniola (Haiti and the Dominican Republic), and possibly Dominica and Martinique (Lee and Haney 1999, pp.14–17; Raffaele *et al.* 1998, p. 217).

Existing black-capped petrel breeding colonies are located in Haiti (Rimmer *et al.* 2006, pp. 8–9) and the Dominican Republic (Collar *et al.* 1992, p. 6; Simons *et al.* 2002, p. 1; Rupp *et al.* 2011, pp. 8–10) within national park boundaries. The known breeding locations in Haiti are in the Parc National Pic Macaya in the Massif de la Hotte mountain range and the Parc National La Viste in the Massif de la Selle mountain range. The known breeding location in the Dominican Republic is within the Parque Nacional Sierra de Bahoruco. The Massif de la Selle and the Sierra de Bahoruco are in adjacent parks along the Haitian-Dominican border (WEG 2011, p. 4–7; Collar *et al.* 2002, pp. 1–2, 3).

There may still be breeding populations of black-capped petrels breeding on Dominica, as suggested by the report of a female black-capped petrel with a brood patch in 2007. The breeding female that was found in Dominica in 2007 was a few kilometers (km) southwest of Morne Micotrin, one of the taller mountains within Morne Trois Pitons National Park, which is a Birdlife International Important Bird Area. However, subsequent visits to Dominica have failed to find nesting birds (Black-capped Petrel Working Group 2011, p. 17), and only a few black-capped petrels have been reported off of this island in recent years (Raffaele *et al.* 1998, p. 217).

It is believed that black-capped petrels historically bred in the southeastern coastal slopes of the Sierra Maestra mountain range in Cuba (Simons *et al.* 2006, p. 1). After dark, continued vocalizions from the birds indicated that at least some of the petrels flew ashore near a narrow stream valley up the steep mountainside towards the Sierra Maestra peaks (Simons *et al.* 2006, p. 1). An additional 25 birds were sighted at the same location on February 9, 2004, and the birds' behavior of massing just offshore and then flying inland at dusk was consistent with breeding in other *Pterodroma* species (Simons *et al.* 2006, p. 2). The authors considered that this behavior strongly suggested that black-capped petrels were nesting near Sierra Maestra; however, we have no evidence confirming that the birds are nesting in this location.

The nonbreeding (foraging) range of the black-capped petrel is centered in the South Atlantic Bight between North Carolina and Florida in the United States. It appears that black-capped petrels migrate from West Indies breeding colonies, north and east of the

Bahamas, via the Antilles Current, rather than through the Straits of Florida (Haney 1987, p. 164). The seasonal abundance patterns of black-capped petrels suggest that the species is widely distributed during the midsummer near the Gulf Stream to 36 degrees North latitude, and perhaps farther north to 40–45 degrees North latitude (Haney 1987, p. 165). Black-capped petrels may occur farther north along the continential shelf than present records suggest, especially where the Gulf Stream meanders, and warm core rings occur near the edge of the continental shelf; however, surveys of northwest Atlantic marine habitats beyond the continental shelf have not identified the species (Haney 1987, p. 165).

Black-capped petrels have been observed relatively close to shore in the West Indies. For example, during an expedition to search for the Jamaica petrel (*Pterodroma caribbaea*), Shirihai *et al.* (2010, pp. 5–6) observed 46 black-capped petrels off Jamaica, whose behavior suggested that they were breeding in the John Crow Mountains of Jamaica. Furthermore, while conducting observations of tubenoses (shearwaters (*Puffinus* species) and petrels) off the coast of Guadeloupe, Levesque and Yesou (2005, p. 674) observed three confirmed black-capped petrels in early 2004 (7 and 14 January, 4 February) and four gadfly petrels (*Pterodroma* species) in the same period that were also most likely black-capped petrels. Prior to 2004, black-capped petrels had not been reported near Guadeloupe in recent history, since breeding ceased to be reported in the 18th century or early 19th century.

Evaluation of Information for This Finding

Section 4 of the Act (16 U.S.C. 1533) and its implementing regulations at 50 CFR part 424 set forth the procedures for adding a species to, or removing a species from, the Federal Lists of Endangered and Threatened Wildlife and Plants. A species may be determined to be an endangered or threatened species due to one or more of the five factors described in section 4(a)(1) of the Act:

(A) The present or threatened destruction, modification, or curtailment of its habitat or range;

(B) Overutilization for commercial, recreational, scientific, or educational purposes;

(C) Disease or predation;

(D) The inadequacy of existing regulatory mechanisms; or

(E) Other natural or manmade factors affecting its continued existence.

In considering what factors might constitute threats, we must look beyond the mere exposure of the species to the factor to determine whether the species responds to the factor in a way that causes actual impacts to the species. If there is exposure to a factor, but no response, or only a positive response, that factor is not a threat. If there is exposure and the species responds negatively, the factor may be a threat and we then attempt to determine how significant a threat it is. If the threat is significant, it may drive or contribute to the risk of extinction of the species such that the species may warrant listing as endangered or threatened as those terms are defined by the Act. This does not necessarily require empirical proof of a threat. The combination of exposure and some corroborating evidence of how the species is likely impacted could suffice. The mere identification of factors that could impact a species negatively may not be sufficient to compel a finding that listing may be warranted. The information shall contain evidence sufficient to suggest that these factors may be operative threats that act on the species to the point that the species may meet the definition of endangered or threatened under the Act.

In making this 90-day finding, we evaluated whether information regarding threats to the black-capped petrel, as presented in the petition and other information available in our files, is substantial, thereby indicating that the petitioned action may be warranted. Our evaluation of this information is presented below.

A. The Present or Threatened Destruction, Modification, or Curtailment of Its Habitat or Range

Information Provided in the Petition

The petition claims that the ''socio-economic realities of Haiti and the Dominican Republic threaten the destruction of its remaining breeding sites'' (WEG 2011, p. 1) In addition, the petition claims that ''offshore oil development off the U.S. Atlantic coast could destroy the primary foraging area of the species'' (WEG 2011, p. 1).

Lee and Haney (1999, p. 43) noted that local human populations in Haiti were encroaching towards the black-capped petrel's breeding colonies around 1980, and agricultural clearings extended both above and below the colonies. The human population of Haiti is expected to increase from approximately 9.7 million in July 2011, to close to 11.2 million by 2025 (United States Census Bureau 2011a, p. 1; CIA World Fact Book, p. 1; WEG 2011, p. 9). Similarly, in the Dominican Republic, the human population is expected to increase from 9.9 million in 2011, to 11.7 million by 2025 (United States Census Bureau 2011b, p. 1; WEG 2011, p. 10). In the Dominican Republic, there is also evidence of illegal selective logging and charcoal-burning within the section of Sierra de Bahoruco National Park near the single known breeding colony of black-capped petrel in the park, and while some improvement in the situation has occurred in recent years, the park administration still faces challenges (Williams *et al.* 1996, p. 29; WEG 2011, p. 14–15), which are discussed further under Factor D, below.

According to the petition, ''Reintroduction of the species to its former range in Guadeloupe and Martinique seems unlikely due to heavy deforestation on these islands (Lee and Haney 1999, p. 44, WEG 2011, p. 9). Only 14,600 hectares of suitable breeding habitat remains on Guadeloupe, and all of the forest habitats on Martinique are heavily affected by human activity (Lee and Haney 1999, p. 44, WEG 2011, p. 9).''

Although the petition includes electrical and communication towers as threats to the black-capped petrel under Factor A, we believe that discussion of these potential threats is more appropriate under Factor E.

Evaluation of Information Provided in the Petition and Available in Service Files

Based on our review of the information provided in the petition and available in our files, it is likely that deforestation and habitat modification as a result of human encroachment upon the black-capped petrel's habitat in Haiti will continue.

The black-capped petrel's narrow foraging habitat at sea is impacted by offshore energy development (Lee and Haney 1999, p. 2), particularly as this species is attracted to oily surfaces to feed (Lee and Haney 1999, p. 48). An oil spill in its feeding range could affect the remaining black-capped petrel population.

In summary, we find that the information provided in the petition, as well as other information available in our files, presents substantial scientific or commercial information indicating that the petitioned action may be warranted due to habitat destruction associated with human encroachment (including those resulting from deforestation and agriculture) and offshore oil developments in the species' foraging grounds.

B. Overutilization for Commercial, Recreational, Scientific, or Educational Purposes

Information Provided in the Petition

The petition claims that human overutilization extirpated the black-capped petrel from two of its former breeding grounds, Guadeloupe and Martinique, due to extensive hunting. The petition also claims that destructive hunting practices continue within the species' remaining breeding areas and that without protection from overutilization, the black-capped petrel could be extirpated in Haiti and the Dominican Republic (WEG 2011, p. 11–12), as well.

Evaluation of Information Provided in the Petition and Available in Service Files

Despite its inclusion under Factor B in the petition, hunting information is not relevant to Factor B, because hunting of black-capped petrels on these islands is for subsistence rather than commercial purposes. Therefore, hunting of black-capped petrels is addressed under Factor E below. We have no information that black-capped petrels are collected or overutilized for commercial, recreational, scientific, or educational purposes. We find that the remaining information provided in the petition and available in our files does not present substantial scientific or commercial information indicating that the petitioned action may be warranted due to overutilization for commercial, recreational, scientific, or educational purposes.

C. Disease or Predation

Information Provided in the Petition

The petition claims that ''one of the most serious threats to the black-capped petrel, both historically and currently, is predation from introduced mammals'' (WEG 2011, p. 12), including dogs (*Canis familiaris*), cats (*Felis catus*), Virginia oppossums (*Didelphis virginiana*), and potentially mongoose (*Herpestes auropunctatus*) and rats (*Rattus norvegicus* and *R. rattus*). For instance, the petition states, ''* * * researchers have noted that feral dogs, cats, and mongoose are becoming more abundant in the nesting areas, and have observed dogs digging petrels from burrows'' (Collar *et al.* 1992, p. 5). Lee and Haney (1999, p. 46) observed the presence of feral house cats at the base of the single nesting cliff in Sierra de Baoruco in the Dominican Republic (WEG 2011, p. 13). The petition goes on to state that ''with an estimated population of only 600–2000 breeding pairs and 13 known breeding colonies, the proximity of introduced predators is an important threat to the black-capped petrel'' (WEG 2011, p. 13). Finally, the petition mentions that pre-Columbians living on the eastern part of Hispaniola imported the coati (*Nasua nasua*), although the coati's impact on nesting black-capped petrels is unknown (WEG 2011, p. 15).

Evaluation of Information Provided in the Petition and Available in Service Files

Based on the information provided in the petition and available in our files, we concur with the petition that predators are encroaching upon the remaining breeding grounds of the black-capped petrel. In addition to the information submitted by the petitioner, we found information in our files to indicate that guards often have several dogs on site that act as sentries at a telecommunication tower site in Loma de Toro, Sierra de Bahoruco, Dominican Republic. The dogs roam freely at night and could prey upon petrel adults or nestlings (Black-capped Petrel Working Group 2011, p. 8).

In summary, we find that the information provided in the petition and available in our files provides substantial scientific or commercial information indicating that the petitioned action may be warranted due to predation. However, neither the petition nor our files present information on the impact of disease to the black-capped petrel.

D. The Inadequacy of Existing Regulatory Mechanisms.

Information Provided in the Petition

The petition claims that only cursory protection exists for the black-capped petrel's remaining breeding habitat. Although at least 11 of the 13 known breeding colonies in Haiti and the Dominican Republic are located in national parks, according to the petitioner, these national park designations have done little to protect the species. The single breeding colony of petrels in the Dominican Republic is located within the Sierra de Bahoruco National Park (Collar *et al.* 1992, p. 6), and it is one of the three core zones of the Jaragua-Bahoruco-Enriquillo Biosphere Reserve. This Reserve contains both protected and unprotected properties (WEG 2011, p. 14). Additionally, the petition states that a 1,152-square kilometer (284,665 acres (ac)) area within the reserve is designated as a Key Biodiversity area, which allows activities, such as research, conservation, recreation, and ecotourism, to take place. According to the petition, although park infrastructure has improved significantly, chronic understaffing, communication problems between the different ranger stations, lack of adequate transportation, and insufficient fuel supplies make park administration difficult (WEG 2011, p. 14–15).

As noted by the petition, in Haiti, nine breeding colonies are located within the La Visite National Park in Massif de la Selle and another is located in the Pic Macaya National Park in Massif de la Hotte (Collar *et al.* 1992, pp. 1, 6). The petition asserts that ''Massif de la Hotte has been designated as a priority for conservation action,'' and it is largely encompassed by the 2,000-hectare (4,942-ac) Parc National Pic Macaya, which is a Key Biodiversity Area and is within a UNESCO Biosphere Reserve (WEG 2011, p. 14).

The petition also claims that there is no stated protection for the species' foraging areas, and no regulatory mechanisms exist that protect the black-capped petrel's narrow foraging range (WEG 2011, p. 15).

Evaluation of Information Provided in the Petition and Available in Service Files

Activities that threaten the species and its habitat (*e.g.,* forest clearings, selective logging, charcoal-burning, fires, nonnative mammals) continue to occur around Sierra de Bahoruco and other national parks in Hispaniola. However, we currently have no information, either from the petition or in our files, on any existing regulatory mechanisms that would provide specific protections for the black-capped petrel in the national parks of Hispaniola.

Based on the information provided in the petition and available in our files, we currently have no information that any regulatory mechanisms exist to protect the petrel's foraging habitat.

In summary, we find that the information provided in the petition and in our files does not provide substantial scientific or commercial information indicating that the petitioned action may be warranted due to the inadequacy of existing regulatory mechanisms. However, as we proceed with the 12-month status review, we will further investigate this factor to determine what, if any, regulatory mechanisms exist to protect the species and whether or not these mechanisms are inadequate.

E. Other Natural or Manmade Factors Affecting Its Continued Existence

Information Provided in the Petition

The petition claims that ''other biological and anthropogenic factors threaten the black-capped petrel's continued existence, including slow recruitment, pollution and bioaccumulation of heavy metals, and climate change'' (WEG 2011, p. 16). ''One breeding pair must successfully breed for three consecutive years to ensure population growth. This aspect of the species' ecology only intensifies the effects of the other threats to the birds. The loss of a few breeding birds could lead cause a significant decline in the population'' (WEG 2011, p. 16).

With regard to heavy metals, the petition states, ''Whaling et al. (1980) reported that black-capped petrels contain seven to nine times more mercury contamination that other similar seabirds, although he was unclear as to the reason. Oil drilling and other activities in the petrel's key foraging area off of North Carolina could release mercury and other heavy metals into marine waters and the food chain, and thus increase toxic loads in petrels (Lee and Haney 1999, p. 2, 48; Black-capped Petrel Working Group 2011, p. 19).''

Additionally, the petition asserts that electrical and communication towers pose immediate collision threats to the black-capped petrel on high mountain ridges at breeding locations, because during nightly courtship flights the birds fly in groups at high speed at varying heights, making them vulnerable to fatal collisions with the towers or the stabilizing guy wires (Black-capped Petrel Workging Group 2011, p. 8; WEG 2011, p. 10).

The petition claims that extensive hunting is known to have occurred in Guadeloupe back to at least the mid-17th century and is thought to have resulted in near extirpation of this population (Collar *et al.* 2002, p. 6; WEG 2011, p. 12; see also the discussion under Factor B, above). In Haiti, local people are known to hunt this bird using the practice of ''sen sel'' (Wingate 1964, pp. 154–155). ''Sen sel'' is a method of capturing the birds at breeding colonies by lighting a fire on a cliff top above a colony (Wingate 1964, pp. 154–155). Birds flying near the fire become disoriented and crash directly into the fire or into nearby vegetation (Wingate 1964, p. 154). This practice continues today in Haiti, and as Haiti's population grows and continues to encroach on the 12 remaining breeding colonies, hunting is likely to have an increasingly negative effect on the species (Lee and Haney 1999, pp. 42–43).

The petition claims that climate change is expected to have significant impacts in the Caribbean region, including sea level rise, higher temperatures, changes in rainfall patterns, and increased intensity of hurricane and other storm activity (Black-capped Petrel Working Group 2011, p. 5; WEG 2011, p. 16). In addition, the petition states that impacts specific to black-capped petrels could include changes in habitat suitability, loss of nesting burrows washed out by rain or flooding, increased petrel strandings inland during storm events, and increased risk from vector-borne disease.

Evaluation of Information Provided in the Petition and Available in Service Files

Information in our files supports the claim in the petition that the species is threatened by other natural and manmade factors.

Birdlife International (2011, p. 1) indicates that a telecommunications mast with stay wires erected in 1995 on Loma de Toro in Sierra de Bahoruco (the only known nesting locality in the Dominican Republic) poses a collision hazard to the black-capped petrel. The Black-capped Petrel Working Group (2011, p. 12) reports that lighting of the towers with light fixtures in a color other than red can attract petrels and increase risk of fatal collision. At some black-capped petrel breeding sites (*e.g.,* Loma del Toro), towers are fitted with bright white lights at the base to assist guards with security surveillance. A watchtower for fire control was placed on Loma del Toro, which allows fires to be spotted quickly (Black-capped Petrel Working Group 2011, p. 12). However, this tall, new structure, when combined with the already existing communication towers, presents additional hazards for flying petrels (WEG 2011, p. 15). Also, at some towers, security guards maintain an open fire throughout the night for warmth and light; the fire may attract petrels, and could be potentially fatal. These open fires also have the additional impact of forest clearing and greatly increases danger of forest fires (Black-capped Petrel Working Group 2011, p. 12).

According to Lee and Haney (1999, p. 48), artificial lights on oil rigs may result in mortality of black-capped petrels from collisions because they are attracted to the lights, particularly when nights are foggy. Due to the high speed flight of the species, collisions with rigging would most likely prove fatal (Lee and Haney 1999, p. 48).

In addition to the practice of 'sen sel,' described by the petitioner, other types of fires may have the same effect on the species. For instance, agricultural clearings now extend to areas just above and below nesting colonies on cliffs; it is standard practice to burn cleared vegetation, which Lee and Haney (1999, p. 43) state has been reported to have a ''sen sel''-type effect on the black-capped petrel.

The Black-capped Petrel Working Group (2011, p. 18) notes that projections for climate change, particularly regionally, are accompanied by substantial uncertainty. ''The Gulf Stream and its associated water masses in the western North Atlantic are key foraging areas for the black-capped petrel, and effects in that system (*e.g.,* stoppage or reversal) would likely significantly impact the species'' (Black-capped Petrel Working Group 2011, p. 18). However, there is currently little evidence of these effects, nor information that these effects may be specifically impacting the black-capped petrel; therefore, the risk associated with them for the petrel is low (Black-capped Petrel Working Group 2011, p. 18).

The Black-capped Petrel Working Group noted that, ''although they are likely long-lived (≥40 years), high adult survival rates are likely critical to balance strong limits that low reproductive rate and limited nest site availability exert on population growth and expansion.'' Therefore, it is likely that the ecology of this species may exacerbate other threats.

In summary, we find that the information provided in the petition, as well as other information in our files, presents substantial scientific or commercial information indicating that the petitioned action may be warranted due to the presence of telecommunication infrastructure, local consumption of black-capped petrels, the impacts of fires and artificial light sources, pollution and heavy metals, slow recruitment, and the impacts of structures associated with oil rigs. We do not find substantial scientific or commercial information in the petition or in our files that the petitioned action may be warranted due to the impacts of climate change. However, we will further investigate this in our 12-month finding.

Finding

On the basis of our evaluation of the petition and other readily available data under section 4(b)(3)(A) of the Act, we find that the petition presents substantial scientific or commercial information indicating that listing the

black-capped petrel throughout its entire range may be warranted. This finding is based on information provided under factors A, C, and E. We find that the information provided under factors B and D are not substantial.

Because we have found that the petition presents substantial information indicating that listing the black-capped petrel may be warranted, we are initiating a status review to determine whether listing the black-capped petrel under the Act is warranted.

The ''substantial information'' standard for a 90-day finding differs from the Act's ''best scientific and commercial data'' standard that applies to a status review to determine whether a petitioned action is warranted. A 90-day finding does not constitute a status review under the Act. In a 12-month finding, we will determine whether a petitioned action is warranted after we have completed a thorough status review of the species, which is conducted following a substantial 90-day finding. Because the Act's standards for 90-day and 12-month findings are different, as described above, a substantial 90-day finding does not mean that the 12-month finding will result in a warranted finding.

References Cited

A complete list of references cited is available on the Internet at *http://www.regulations.gov* and upon request from the Caribbean Ecological Services Field Office (see **FOR FURTHER INFORMATION CONTACT**).

Authors

The primary authors of this notice are the staff members of the Caribbean Ecological Services Field Office.

Authority

The authority for this action is the Endangered Species Act of 1973, as amended (16 U.S.C. 1531 *et seq.*).

Dated: June 7, 2012.

Daniel M. Ashe,

Director, U.S. Fish and Wildlife Service.

[FR Doc. 2012–15116 Filed 6–20–12; 8:45 am]

BILLING CODE 4310–55–P

Notices

Federal Register

Vol. 77, No. 120

Thursday, June 21, 2012

This section of the FEDERAL REGISTER contains documents other than rules or proposed rules that are applicable to the public. Notices of hearings and investigations, committee meetings, agency decisions and rulings, delegations of authority, filing of petitions and applications and agency statements of organization and functions are examples of documents appearing in this section.

DEPARTMENT OF AGRICULTURE

Agricultural Marketing Service

[Doc. No. AMS–NOP–12–0020; NOP–12–08]

Nominations for Members of the National Organic Standards Board

AGENCY: Agricultural Marketing Service, USDA.

ACTION: Notice.

SUMMARY: The Organic Foods Production Act (OFPA) of 1990, as amended, requires the establishment of a National Organic Standards Board (NOSB). The NOSB is a 15-member board that is responsible for developing and recommending to the Secretary a proposed National List of Allowed and Prohibited Substances and advises the Secretary on other aspects of the National Organic Program. The U.S. Department of Agriculture (USDA) is requesting nominations to fill one (1) upcoming vacancy on the NOSB. The position to be filled is environmentalist. The Secretary of Agriculture will appoint a person to the position to serve a 5-year term of office that will commence on January 24, 2013, and run until January 24, 2018.

DATES: Written nominations, with cover letters and resumes, must be postmarked on or before date July 30, 2012.

ADDRESSES: Nomination cover letters and resumes should be sent to Michelle Arsenault, Advisory Board Specialist, USDA–AMS–NOP, 1400 Independence Avenue SW., Room 2640–So., Ag Stop 0268, Washington, DC 20250, or via email to *Michelle.Arsenault@ams.usda.gov.*

FOR FURTHER INFORMATION CONTACT: Michelle Arsenault, (202) 720–0081; Email *Michelle.Arsenault@ams.usda.gov;* Fax: (202) 205–7808 or Patricia Atkins, (202) 260–8636; Email: *Patricia.Atkins@ams.usda.gov.*

SUPPLEMENTARY INFORMATION: The OFPA of 1990, as amended (7 U.S.C. Section 6501 *et seq.*), requires the Secretary to establish an organic certification program for producers and handlers of agricultural products that have been produced using organic methods. In developing this program, the Secretary is required to establish an NOSB. The purpose of the NOSB is to assist in the development of a proposed National List of Allowed and Prohibited Substances and to advise the Secretary on other aspects of the National Organic Program.

The NOSB is composed of 15 members; including 4 organic producers, 2 organic handlers, a retailer, 3 environmentalists, 3 public/consumer representatives, a scientist, and a certifying agent. Nominations are being sought to fill the position of environmentalist. Individuals desiring to be appointed to the NOSB at this time must have expertise in areas of environmental protection and resource conservation. Selection criteria includes such factors as: Understanding of organic principles and practical experience in the organic community; demonstrated experience in the development of public policy such as participation on public or private advisory boards, boards of directors or other comparable organizations; participation in standards development or involvement in educational outreach activities; a commitment to the integrity of the organic food and fiber industry; the ability to evaluate technical information and to fully participate in Board deliberation and recommendations; and the willingness to commit the time and energy necessary to assume Board duties; demonstrated experience and interest in organic production; organic certification; support of consumer and public interest organizations; demonstrated experience with respect to agricultural products produced and handled on certified organic farms; and such other factors as may be appropriate for specific positions.

To nominate yourself or someone else, please submit: A resume, a cover letter, and a Form AD–755, which can be accessed at: *www.ocio.usda.gov/forms/doc/AD-755.pdf.* Resumes must be no longer than 5 pages, and include at the beginning a summary of the following information: Current and past organization affiliations; areas of expertise; education; career positions held; any other notable positions held. You may also submit a list of endorsements or letters of recommendation, if desired. Resumes and completed requested background information is required for a nominee to receive consideration for appointment by the Secretary.

Equal opportunity practices will be followed in all appointments to the NOSB in accordance with USDA policies. To ensure that the members of the NOSB take into account the needs of the diverse groups that are served by the Department, membership on the NOSB will include, to the extent practicable, individuals who demonstrate the ability to represent all racial and ethnic groups, women and men, and persons with disabilities.

The information collection requirements concerning the nomination process have been previously cleared by the Office of Management and Budget (OMB) under OMB Control No. 0505–0001.

Dated: June 18, 2012.

Ruihong Guo,

Acting Administrator, Agricultural Marketing Service.

[FR Doc. 2012–15204 Filed 6–20–12; 8:45 am]

BILLING CODE 3410–02–P

DEPARTMENT OF AGRICULTURE

Commodity Credit Corporation

Notice of Request for Revision of Currently Approved Information Collection

AGENCY: Commodity Credit Corporation, USDA.

ACTION: Notice and request for comments.

SUMMARY: In accordance with the Paperwork Reduction Act of 1995, this notice announces the Commodity Credit Corporation's (CCC) intention to request a revision from the Office of Management and Budget (OMB) for a currently approved information collection process in support of the Foreign Market Development Cooperator (Cooperator) Program and the Market Access Program (MAP).

DATES: Comments on this notice must be received by August 20, 2012.

Additional Information or Comments: Contact Mark Slupek, Director, Program Operations Division, Foreign Agricultural Service, Room 6510, 1400 Independence Avenue SW., Washington, DC 20250, (202) 720–4327, fax: (202) 720–9361, email: *podadmin@fas.usda.gov.*

SUPPLEMENTARY INFORMATION:

Title: Foreign Market Development Cooperator Program and Market Access Program.

OMB Number: 0551–0026.

Expiration Date of Approval: August 31, 2012.

Type of Request: Revision of a currently approved information collection process. The Estimate of Burden is decreasing and the Estimated Number of Responses per Respondent and Estimated Total Annual Burden on Respondents is increasing.

Abstract: The primary objective of the Foreign Market Development Cooperator Program and the Market Access Program is to encourage and aid in the creation, maintenance, and expansion of commercial export markets for U.S. agricultural products through cost-share assistance to eligible trade organizations. The programs are a cooperative effort between CCC and the eligible trade organizations. Currently, there are about 70 organizations participating directly in the programs with activities in more than 100 countries.

Prior to initiating program activities, each Cooperator or MAP participant must submit a detailed application to the Foreign Agricultural Service (FAS) which includes an assessment of overseas market potential; market or country strategies, constraints, goals, and benchmarks; proposed market development activities; estimated budgets; and performance measurements. Prior years' plans often dictate the content of current year plans because many activities are continuations of previous activities. Each Cooperator or MAP participant is also responsible for submitting: (1) Reimbursement claims for approved costs incurred in carrying out approved activities, (2) an end-of-year contribution report, (3) travel reports, and (4) progress reports/evaluation studies. Cooperators or MAP participants must maintain records on all information submitted to FAS. The information collected is used by FAS to manage, plan, evaluate, and account for Government resources. The reports and records are required to ensure the proper and judicious use of public funds. FAS has recently revised the MAP regulation and added three additional required documents to the MAP program: brand program operational procedures, written contracting guidelines, and an anti-fraud prevention program. With the addition of these three documents and other minor adjustments, the Estimate of Burden is decreasing and the Estimated Number of Responses per Respondent and Estimated Total Annual Burden on Respondents is increasing.

Estimate of Burden: Public reporting burden for this collection of information is estimated to average 20 hours per response.

Respondents: Non-profit agricultural trade organizations, state regional trade groups, agricultural cooperatives, state agencies, and commercial entities.

Estimated Number of Respondents: 71.

Estimated Number of Responses per Respondent: 68.

Estimated Total Annual Burden on Respondents: 96,560 hours.

Copies of this information collection can be obtained from Connie Simpson, the Agency Information Collection Coordinator, at (202) 690–1578.

Request for Comments: Send comments regarding the accuracy of the burden estimate, ways to minimize the burden, including through the use of automated collection techniques or other forms of information technology, or any other aspect of this collection of information, to: Mark Slupek, Director, Program Operations Division, Foreign Agricultural Service, Room 6510, STOP 1042, 1400 Independence Avenue SW., Washington, DC 20250. Facsimile submissions may be sent to (202) 720–9361 and electronic mail submissions should be addressed to: *podadmin@fas.usda.gov.*

All responses to this notice will be summarized and included in the request for OMB approval. All comments will also become a matter of public record.

Signed at Washington, DC, on June 1, 2012.

Janet A. Nuzum,

Acting Administrator, Foreign Agricultural Service, and Vice President, Commodity Credit Corporation.

[FR Doc. 2012–15200 Filed 6–20–12; 8:45 am]

BILLING CODE 3410–10–P

DEPARTMENT OF AGRICULTURE

Commodity Credit Corporation

Notice of Request for Extension of Currently Approved Information Collection

AGENCY: Commodity Credit Corporation, USDA.

ACTION: Notice and request for comments.

SUMMARY: In accordance with the Paperwork Reduction Act of 1995, this notice announces the Commodity Credit Corporation's (CCC) intention to request an extension from the Office of Management and Budget (OMB) for a currently approved information collection process in support of the Technical Assistance for Specialty Crops (TASC) program.

DATES: Comments on this notice must be received by August 20, 2012 to be assured of consideration.

Additional Information or Comments: Contact Mark Slupek, Director, Program Operations Division, Foreign Agricultural Service, Room 6510, 1400 Independence Avenue SW., Washington, DC 20250, (202) 720–1169, fax: (202) 720–9361, email: *podadmin@fas.usda.gov.*

SUPPLEMENTARY INFORMATION:

Title: Technical Assistance for Specialty Crops.

OMB Number: 0551–0038.

Expiration Date of Approval: September 30, 2012.

Type of Request: Extension of a currently approved information collection.

Abstract: This information is needed to administer CCC's Technical Assistance for Specialty Crops program. The information will be gathered from applicants desiring to receive grants under the program to determine the viability of request for funds. Regulations governing the program appear at 7 CFR part 1487 and are available on the Foreign Agricultural Service's Web site.

Estimate of Burden: Public reporting burden for this collection of information is estimated to average 32 hours per respondent.

Respondents: U.S. government agencies, State government agencies, non-profit trade associations, universities, agricultural cooperatives, and private companies.

Estimated Number of Respondents: 50.

Estimated Number of Responses per Respondent: 5.

Estimated Total Annual Burden on Respondents: 1,600 hours.

Copies of this information collection can be obtained from Connie Simpson, the Agency Information Collection Coordinator, at (202) 690–1578.

Request for Comments: Send comments regarding the accuracy of the burden estimate, ways to minimize the burden, including through the use of automated collection techniques or other forms of information technology,

or any other aspect of this collection of information, to: Mark Slupek, Director, Program Operations Division, Foreign Agricultural Service, Room 6510, 1400 Independence Avenue SW., Washington, DC 20250. Facsimile submissions may be sent to (202) 720–1169 and electronic mail submissions should be addressed to: *podadmin@fas.usda.gov.*

All responses to this notice will be summarized and included in the request for OMB approval. All comments will also become a matter of public record.

Signed at Washington, DC, on June 1, 2012.

Janet A. Nuzum,

Acting Administrator, Foreign Agricultural Service, and Vice President, Commodity Credit Corporation.

[FR Doc. 2012–15203 Filed 6–20–12; 8:45 am]

BILLING CODE 3410–10–P

COMMISSION ON CIVIL RIGHTS

Agenda and Notice of Public Meeting of the Montana Advisory Committee

Notice is hereby given, pursuant to the provisions of the rules and regulations of the U.S. Commission on Civil Rights (Commission), and the Federal Advisory Committee Act (FACA), that a planning meeting of the Montana Advisory Committee to the Commission will convene at 1:00 p.m. (MDT) on Tuesday, July 10, 2012, at the Montana-Wyoming Tribal Leaders Council, Wells Fargo Bank Building, 175 N. 27th Street, Suite 1003, Billings, MT 59101.

The purpose of the planning meeting is to discuss civil rights issues in the state and to select a project topic.

Members of the public are entitled to submit written comments; the comments must be received in the regional office within 30 days of the meeting. Written comments may be mailed to the Rocky Mountain Regional Office, U.S. Commission on Civil Rights, 999 18th Street, Suite 1380 South, Denver, CO 80202. They may be faxed to (303) 866–1050 or emailed to *ebohor@usccr.gov*. Persons who desire additional information may contact the Rocky Mountain Regional Office at (303) 866–1040.

Records generated from this meeting may be inspected and reproduced at the Rocky Mountain Regional Office, as they become available, both before and after the meeting. Persons interested in the work of this advisory committee are advised to go to the Commission's Web site, *www.usccr.gov,* or to contact the Rocky Mountain Regional Office at the above email or street address.

Deaf or hearing-impaired persons who will attend the meeting and require the services of a sign language interpreter should contact the Rocky Mountain Regional Office at least ten (10) working days before the scheduled date of the meeting.

The meeting will be conducted pursuant to the provisions of the rules and regulations of the Commission and FACA.

Dated in Washington, DC, on June 18, 2012.

Peter Minarik,

Acting Chief, Regional Programs Coordination Unit.

[FR Doc. 2012–15226 Filed 6–20–12; 8:45 am]

BILLING CODE 6335–01–P

DEPARTMENT OF COMMERCE

Bureau of Economic Analysis

Proposed Information Collection; Comment Request; Foreign Ocean Carriers' Expenses in the United States

ACTION: Notice.

SUMMARY: The Department of Commerce, as part of its continuing effort to reduce paperwork and respondent burden, invites the general public and other Federal agencies to comment on proposed and/or continuing information collections, as required by the Paperwork Reduction Act of 1995.

DATES: Written comments must be submitted on or before 5:00 p.m. August 20, 2012.

ADDRESSES: Direct all written comments to Jennifer Jessup, Departmental Paperwork Clearance Officer, Department of Commerce, Room 6616, 14th and Constitution Avenue NW., Washington, DC 20230, or via the Internet at *jjessup@doc.gov.*

FOR FURTHER INFORMATION CONTACT: Direct requests for additional information or copies of the survey and instructions to Christopher Emond, Chief, Special Surveys Branch, Balance of Payments Division, (BE–50), Bureau of Economic Analysis, U.S. Department of Commerce, Washington, DC 20230; phone: (202) 606–9826; fax: (202) 606–5318; or via the Internet at *christopher.emond@bea.gov.*

SUPPLEMENTARY INFORMATION:

I. Abstract

Form BE–29, Foreign Ocean Carriers' Expenses in the United States, obtains annual data from U.S. agents that handle 40 or more port calls by foreign ocean vessels and the covered expenses for all foreign ocean vessels handled by the U.S. agent were $250,000 or more. U.S. agents that handle fewer than 40 port calls or where the total annual covered expenses for all foreign ocean vessels handled by the U.S. agent are below $250,000 are exempt from reporting. The data collected are cut-off sample data. The Bureau of Economic Analysis (BEA) estimates expenses for non-respondents.

The data are needed to monitor U.S. international trade in transportation services, to analyze its impact on the U.S. economy and foreign economies, to compile and improve the U.S. economic accounts, and to support U.S. commercial policy on transportation services, conduct trade promotion, and improve the ability of U.S. businesses to identify and evaluate market opportunities.

Survey forms will be sent to respondents each year; responses will be due within 90 days after the close of the calendar year. The data from the survey are primarily intended as general purpose statistics. They are needed to answer any number of research and policy questions related to foreign ocean carriers' expenses in the United States. There are no changes proposed to the form or instructions.

II. Method of Collection

The surveys are sent to the respondents by U.S. mail; the surveys are also available from the BEA Web site. Respondents return the surveys one of four ways: U.S. mail, electronically using BEA's electronic collection system (eFile), fax, or email.

III. Data

OMB Number: 0608–0012.

Form Number: BE–29.

Type of Review: Regular submission.

Affected Public: Businesses or other for-profit organizations.

Estimated Number of Respondents: 149 annually.

Estimated Time per Response: 4 hours.

Estimated Total Annual Burden Hours: 596 hours.

Estimated Total Annual Cost to Public: $0.

Respondent's Obligation: Mandatory.

Legal Authority: The International Investment and Trade in Services Survey Act, 22 U.S.C. 3101–3108, as amended.

IV. Request for Comments

Comments are invited on: (a) Whether the proposed collection of information is necessary for the proper performance of the functions of the Agency, including whether the information will have practical utility; (b) the accuracy of

the Agency's estimate of the burden (including hours and cost) of the proposed collection of information; (c) ways to enhance the quality, utility, and clarity of the information to be collected; and (d) ways to minimize the burden of the collection of information on respondents, including through the use of automated collection techniques or other forms of information technology.

Comments submitted in response to this notice will be summarized and/or included in the request for OMB approval of this information collection; they also will become a matter of public record.

Glenna Mickelson,

Management Analyst, Office of Chief Information Officer.

[FR Doc. 2012–15094 Filed 6–20–12; 8:45 am]

BILLING CODE 3510–06–P

DEPARTMENT OF COMMERCE

International Trade Administration

[A–570–977]

High Pressure Steel Cylinders From the People's Republic of China: Antidumping Duty Order

AGENCY: Import Administration, International Trade Administration, Department of Commerce.

SUMMARY: Based on affirmative final determinations by the Department of Commerce (''Department'') and the International Commission (''ITC''), the Department is issuing an antidumping duty order on high pressure steel cylinders from the People's Republic of China (''PRC''). On June 14, 2012, the ITC notified the Department of its affirmative determination of material injury to a U.S. industry.[1]

DATES: *Effective Date:* June 21, 2012.

FOR FURTHER INFORMATION CONTACT: Alan Ray or Emeka Chukwudebe, AD/CVD Operations, Office 9, Import Administration, International Trade Administration, U.S. Department of Commerce, 14th Street and Constitution Avenue NW., Washington, DC 20230; telephone: (202) 482–5403 or (202) 482–0219, respectively.

SUPPLEMENTARY INFORMATION:

Background

In accordance with sections 735(d) and 777(i)(1) of the Tariff Act of 1930, as amended (''Act''), the Department published the final determination of sales at less than fair value in the antidumping investigation of high pressure steel cylinders from the PRC.[2]

Scope of the Order

The merchandise covered by the order is seamless steel cylinders designed for storage or transport of compressed or liquefied gas (''high pressure steel cylinders''). High pressure steel cylinders are fabricated of chrome alloy steel including, but no limited to, chromium-molybdenum steel or chromium magnesium steel, and have permanently impressed into the steel, either before or after importation, the symbol of a U.S. Department of Transportation, Pipeline and Hazardous Materials Safety Administration (''DOT'') approved high pressure steel cylinder manufacturer, as well as an approved DOT type marking of DOT 3A, 3AX, 3AA, 3AAX, 3B, 3E, 3HT, 3T, or DOT–E (followed by a specific exemption number) in accordance with the requirements of sections 178.36 through 178.68 of Title 49 of the Code of Federal Regulations, or any subsequent amendments thereof. High pressure steel cylinders covered by the investigation have a water capacity up to 450 liters, and a gas capacity ranging from 8 to 702 cubic feet, regardless of corresponding service pressure levels and regardless of physical dimensions, finish or coatings.

Excluding from the scope of the order are high pressure steel cylinders manufactured to UN–ISO–9809–1 and 2 specifications and permanently impressed with ISO or UN symbols. Also excluded from the investigation are acetylene cylinders, with or without internal porous mass, and permanently impressed with 8A or 8AL in accordance with DOT regulations.

Merchandise covered by the order is classified in the Harmonized Tariff Schedule of the United States (''HTSUS'') under subheading 7311.00.00.30. Subject merchandise may also enter under HTSUS subheadings 7311.00.00.60 or 7311.00.00.90. Although the HTSUS subheadings are provided for convenience and customs purposes, the written description of the merchandise under the investigation is dispositive.

Provisional Measures

Section 733(d) of the Act states that instructions to suspend liquidation that are issued pursuant to an affirmative preliminary determination may not remain in effect for more than four months except where exporters representing a significant proportion of exports of the subject merchandise request the Department to extend that four-month period to no more than six months. At the request of the exporters that accounted for a significant proportion of exports of the subject merchandise in the investigations of high pressure steel cylinders from the PRC, we extended the four-month period to no more than six months.[3]

In this investigation, the six-month period beginning on the date of the publication of the preliminary determinations (*i.e.,* December 15, 2011) ended on June 11, 2012. Furthermore, section 737 of the Act states that definitive duties are to begin on the date of publication of the ITC's final injury determination. Therefore, in accordance with section 733(d) of the Act, we will instruct U.S. Customs and Border Protection (''CBP'') to terminate the suspension of liquidation and to liquidate, without regard to antidumping duties, unliquidated entries of high pressure steel cylinders from the PRC entered, or withdrawn from warehouse, for consumption after June 11, 2012, and before the date of publication of the ITC's final injury determination in the **Federal Register.** Suspension of liquidation will resume on or after the date of publication of the ITC's final injury determination in the **Federal Register.**

Continuation of Suspension of Liquidation

In accordance with section 735(c)(1)(B) of the Act, we will instruct CBP to suspend liquidation on all entries of subject merchandise from the PRC. We will also instruct CBP to require cash deposits equal to the estimated amount by which the normal value exceeds the U.S. price as indicated in the chart below. These instructions suspending liquidation will remain in effect until further notice.

Antidumping Duty Order

On June 14, 2012, in accordance with section 735(d) of the Act, the ITC notified the Department of its final determination, pursuant to section 735(b)(1)(A)(i) of the Act, that an industry in the United States is materially injured by reason of less-than-fair-value imports of subject merchandise from the PRC. Therefore, in accordance with section 736(a)(1) of the Act, the Department will direct CBP

[1] *See High Pressure Steel Cylinders from China* (Investigation Nos. 701–TA–480 and 731–TA–1188 (Final), USITC Publication 4328, June 2012).

[2] *See High Pressure Steel Cylinders From the People's Republic of China: Final Determination of Sales at Less Than Fair Value,* 77 FR 26739 (May 7, 2012) (''*Final Determination*'').

[3] *See High Pressure Steel Cylinders From the People's Republic of China: Postponement of Final Determination of Antidumping Duty Investigation,* 77 FR 1060 (January 9, 2012) (''*Final Postponement*'').

to assess, upon further instruction by the Department, antidumping duties equal to the amount by which the normal value of the merchandise exceeds the export price (or constructed export price) of the merchandise for all relevant entries of high pressure steel cylinders from the PRC. These antidumping duties will be assessed on unliquidated entries of high pressure steel cylinders from the PRC entered, or withdrawn from the warehouse, for consumption on or after December 15, 2011, the date on which the Department published its *Preliminary Determination.*[4]

Effective on the date of publication of the ITC's final affirmative injury determination, CBP will require, at the same time as importers would normally deposit estimated duties on this merchandise, a cash deposit for estimated antidumping duties equal to the weighted-average dumping margins as listed below.[5] The ''PRC-wide'' rate applies to all exporters of subject merchandise not specifically listed. The weighted-average dumping margins are as follows:

Exporter	Producer	Weighted-average dumping margin (percent)
Beijing Tianhai Industry Co., Ltd	Beijing Tianhai Industry Co., Ltd	6.62
Beijing Tianhai Industry Co., Ltd	Tianjin Tianhai High Pressure Container Co., Ltd	6.62
Beijing Tianhai Industry Co., Ltd	Langfang Tianhai High Pressure Container Co., Ltd	6.62
Shanghai J.S.X. International Trading Corporation	Shanghai High Pressure Special Gas Cylinder Co., Ltd	6.62
Zhejiang Jindun Pressure Vessel Co., Ltd	Zhejiang Jindun Pressure Vessel Co., Ltd	6.62
Shijiazhuang Enric Gas Equipment Co., Ltd	Shijiazhuang Enric Gas Equipment Co., Ltd	6.62
PRC-Wide Rate[6]		31.21

This notice constitutes the antidumping duty order with respect to high pressure steel cylinders from the PRC pursuant to section 736(a) of the Act. Interested parties may contact the Department's Central Records Unit, Room 7046 of the main Commerce building, for copies of an updated list of antidumping duty orders currently in effect.

This order is published in accordance with section 736(a) of the Act and 19 CFR 351.211.

Dated: June 18, 2012.

Paul Piquado,

Assistant Secretary for Import Administration.

[FR Doc. 2012–15297 Filed 6–20–12; 8:45 am]

BILLING CODE 3510–DS–P

[4] *See High Pressure Steel Cylinders From the People's Republic of China: Preliminary Determination of Sales at Less Than Fair Value,* 76 FR 77964 (December 15, 2011) (''*Preliminary Determination*'').

[5] *See* section 736(a)(3) of the Act.

[6] The PRC-Wide entity includes: Shanghai High Pressure Container Co., Ltd.; Heibei Baigong Industrial Co., Ltd.; Nanjing Ocean High-Pressure Vessel Co., Ltd.; Qingdao Baigong Industrial and Trading Co., Ltd.; Shandong Huachen High Pressure Co., Ltd.; Shandong Province Building High Pressure Vessel Limited Company; Sichuan Mingchaun Chengyu Co., Ltd.; and Zhuolu High Pressure Vessel Co., Ltd.

DEPARTMENT OF COMMERCE

International Trade Administration

[A–570–863]

Honey From the People's Republic of China: Affirmative Preliminary Determination of Circumvention of the Antidumping Duty Order

AGENCY: Import Administration, International Trade Administration, Department of Commerce.

ACTION: Notice of Affirmative Preliminary Determination of Circumvention of Antidumping Duty Order.

SUMMARY: In response to a request from the American Honey Producers Association and the Sioux Honey Association (collectively ''Petitioners''), the Department of Commerce (''Department'') initiated an anticircumvention inquiry pursuant to section 781(d) of the Tariff Act of 1930, as amended (''the Act'') to determine whether blends of honey and rice syrup should be considered subject to the antidumping duty order on honey from the People's Republic of China (''PRC'') [1] under the later-developed merchandise provision.

DATES: *Effective Date:* June 21, 2012.

FOR FURTHER INFORMATION CONTACT: Catherine Bertrand, telephone: (202) 482–3207, or Josh Startup, telephone: (202) 482–5260; AD/CVD Operations, Office 9, Import Administration, International Trade Administration, U.S. Department of Commerce, 14th Street and Constitution Avenue NW., Washington, DC 20230.

SUPPLEMENTARY INFORMATION:

Background

On December 7, 2011, the Department initiated this anticircumvention inquiry regarding blends of honey and rice syrup from the PRC.[2] On February 3, 2012, the Department issued a questionnaire to all parties on the comprehensive service list for this *Order,* and Anhui Hundred Health Foods Co., Ltd. (''Anhui Hundred'').[3] On March 9, 2012, Petitioners submitted a timely response. No other parties submitted questionnaire responses. On May 4, 2012, Petitioners filed a submission arguing that the Department does not need to notify the International Trade Commission (''ITC'') regarding this inquiry.

[1] *See Notice of Amended Final Determination of Sales at Less Than Fair Value and Antidumping Duty Order; Honey From the People's Republic of China,* 66 FR 63670 (December 10, 2001) (''*Order*'').

[2] *See Honey From the People's Republic of China: Initiation of Anticircumvention Inquiry,* 76 FR 239 (December 13, 2011) (''*Initiation Notice*'').

[3] Anhui Hundred, a PRC producer of blends of honey and rice syrup, was not on the comprehensive scope service list, but filed a submission opposing the initiation of this inquiry on November 1, 2011 (''Anhui Hundred Opposition''). Previously, Anhui Hundred filed a scope ruling request on its blend of honey and rice syrup on April 4, 2011, which was placed on the record of this inquiry by the Department on August 8, 2011 (''Anhui Scope Request''). The Department declined to initiate Anhui Hundred's scope inquiry on June 27, 2011.

Scope of the Order

The products covered by the order are natural honey, artificial honey containing more than 50 percent natural honey by weight, preparations of natural honey containing more than 50 percent natural honey by weight and flavored honey. The subject merchandise includes all grades and colors of honey whether in liquid, creamed, comb, cut comb, or chunk form, and whether packaged for retail or in bulk form.

The merchandise subject to the order is currently classifiable under subheadings 0409.00.00, 1702.90.90, 2106.90.99, 0409.00.0010, 0409.00.0035, 0409.00.0005, 0409.00.0045, 0409.00.0056, and 0409.00.0065 of the Harmonized Tariff Schedule of the United States (''HTSUS''). Although the HTSUS subheadings are provided for convenience and customs purposes, the Department's written description of the merchandise under order is dispositive.

Merchandise Subject to the Anticircumvention Request

The merchandise subject to the anticircumvention request is blends of honey and rice syrup, regardless of the percentage of honey they contain, from the PRC.

Preliminary Determination

We preliminarily determine that blends of honey and rice syrup, regardless of the percentage of honey contained, are therein circumventing the antidumping duty order on honey from the PRC, as provided in section 781(d) of the Act. In determining whether blends of honey and rice syrup are appropriately considered a later-developed product under section 781(d) of the Act, the Department evaluated the arguments raised by the interested parties in light of the statute, regulations, and the applicable legislative history.

Legal Framework

Section 781(d) of the Act provides that the Department may find circumvention of an antidumping duty order when merchandise is developed after a less-than-fair-value (''LTFV'') investigation is initiated (''later-developed merchandise''). In conducting anticircumvention inquiries under section 781(d)(1) of the Act, the Department shall consider the following criteria: (A) Whether the later-developed merchandise has the same general physical characteristics as the merchandise with respect to which the order was originally issued (''earlier product''); (B) whether the expectations of the ultimate purchasers of the later-developed merchandise are the same as for the earlier product; (C) whether the ultimate use of the earlier product and the later-developed merchandise is the same; (D) whether the later-developed merchandise is sold through the same channels of trade as the earlier product; and (E) whether the later-developed merchandise is advertised and displayed in a manner similar to the earlier product.

In addition, section 781(d)(2) of the Act also states that the administering authority may not exclude later-developed merchandise from a countervailing or antidumping duty order merely because the merchandise (A) is classified under a tariff classification other than that identified in the petition or the administering authority's prior notices during the proceeding, or (B) permits the purchaser to perform additional functions, unless such additional functions constitute the primary use of the merchandise, and the cost of the additional functions constitute more than a significant proportion of the total cost of production of the merchandise.

The statute does not provide further guidance in defining the meaning of later development. The only other source of guidance available is the brief discussion of later-developed products in the legislative history for section 781(e) of the Act, which, although addressing later-developed products with respect to the ITC's injury analysis, we find is also relevant to the Department's analysis. The Conference Report on H.R. 3, Omnibus Trade and Competitiveness Act of 1988 suggests that a later-developed product may be one which has been produced as a result of a ''significant technological advancement or a significant alteration of the merchandise involving commercially significant changes.'' [4] While this provision of the legislative history does not exclusively limit the meaning of later developed to only those instances involving a significant technological advancement or significant alteration of subject merchandise, it provides guidance by defining certain types of later-developed merchandise. In addition, in the first section 781(d) determination involving portable electric typewriters, the Department also cited a U.S. Senate report: ''{s}ection 781(d) was designed to prevent circumvention of an existing order through the sale of later developed products or of products with minor alterations that contain features or technologies not in use in the class or kind of merchandise imported into the United States at the time of the original investigation.'' [5]

In addition to the statute, prior later-developed merchandise cases also provide further guidance, foremost of which is that the Department has considered ''commercial availability'' in some form in its prior later-developed merchandise anticircumvention inquiries.[6] In each case, the Department addressed the ''commercial availability'' of the later-developed merchandise in some capacity, such as the product's presence in the commercial market or whether the product was fully ''developed,'' *i.e.,* tested and ready for commercial production. The Court of International Trade and the Court of Appeals for the Federal Circuit have affirmed this test holding that a ''product's actual presence in the market at the time of the {antidumping} investigation is a necessary predicate of its inclusion or exclusion from the scope of an antidumping order.'' [7] Additionally, in *Candles,* the Department considered whether the merchandise at issue in that inquiry was later developed as a result of a significant technological development or a significant alteration of the merchandise involving commercially significant changes.[8]

Based upon the legislative history of the anticircumvention provision and prior later-developed merchandise

[4] The legislative history for this provision provides that, ''With respect to later-developed products, a significant injury issue can arise if there is a significant technological development or a significant alteration of the merchandise involving commercially significant changes in the characteristics and uses of the product * * * Thus, a later-developed product incorporating a new technology that provides additional capability, speed, or functions would be covered by the order as long as it has the same basic characteristics and uses.'' *See* H.R. Conf. Rep No. 576, 100th Cong., 2d Sess., at 603 (1988), *reprinted in* 1988 U.S.C.C.A.A.N. 1547, 1636. The CIT has subsequently held that neither the legislative history nor the ITC consultation provision at 781(e) ''define or limit the meaning of later-developed merchandise.'' *Target Corp.* v. *United States,* 32 C.I.T. 1016, 1025 (Ct. Int'l Trade 2008).

[5] *See* S. Rep No. 40., 100th Cong., 1st Sess. 101 (1987).

[6] See *PET Final; EMD Final;* and *EPROMs Final. See Portable Electric Typewriters from Japan: Final Scope Ruling,* 55 FR 47358 (November 13, 1990) (''*PET Final*''); *Electrolytic Manganese Dioxide from Japan: Final Scope Ruling,* 57 FR 395 (January 6, 1992) (''*EMD Final*''); and *Erasable Programmable Read Only Memories from Japan: Final Scope Ruling,* 57 FR 11599 (April 6, 1992) (''*EPROMS Final*''); *Later-Developed Merchandise Anticircumvention Inquiry of the Antidumping Duty Order on Petroleum Wax Candles from the People's Republic of China: Affirmative Final Determination of Circumvention of the Antidumping Duty Order* 71 FR 59075 (October 6, 2006) (''*Candles*'').

[7] *See Target Corp.* v. *United States,* 578 F. Supp. 2d 1369, 1375–1376 (Ct. Int'l Trade 2008) (citations omitted); *Target Corp.* v. *United States,* 609 F.3d 1352, 1360 (Fed. Cir. 2010).

[8] *See Candles,* 71 FR at 59,077.

inquiries, the Department continues to include a ''commercial availability'' standard in its analysis of this proceeding, as was indicated in the *Initiation Notice.* As noted above, both the legislative history and prior later-developed merchandise inquiries place emphasis on evaluating the ''commercial availability'' of the specific product to determine whether that product is later-developed, pursuant to section 781(d) of the Act. Accordingly, the Department will evaluate whether blends of honey and rice syrup were not ''commercially available'' at the time of the LTFV investigation in order to be properly considered later-developed merchandise. Additionally, similar to the Department's analysis in *Candles,*[9] the Department will examine whether blends of honey and rice syrup are materially different from those under consideration at the time of the investigation, while allowing them to have ''the same basic characteristics and uses.'' [10] Through this analysis, the Department ensures that the merchandise which is the subject of this scope inquiry is not the same as the merchandise explicitly excluded under the scope of the *Order*.

We have analyzed the information and comments of interested parties in this anticircumvention inquiry. Based on all of the information on the record, the Department considered whether the merchandise subject to this anticircumvention inquiry constitutes ''later-developed merchandise'' within the meaning of section 781(d) of the Act.

Whether Blends of Honey and Rice Syrup Are Later-Developed Merchandise

Commercial Availability

First, we address whether blends of honey and rice syrup constitute later-developed merchandise by determining whether this merchandise was commercially available at the time of the LTFV investigation. As evidence that blends of honey and rice syrup were not commercially available at the time of the investigation, Petitioners note that the ITC Report [11] specifically identifies ''refined sugar, high-fructose corn syrup, and the like'' [12] as being used to make artificial honey. They note that rice syrup was not included in this illustrative list, because only refined sugar and high-fructose corn syrup were readily available in the U.S. market, with corn syrup being the most common sweetener mixed with honey.[13] Further, according to Petitioners, at the time of the original investigation honey blended with any other non-honey sweeteners was rare in the U.S. market due to economic adulteration.[14] The Department specifically requested from the parties any evidence that blends of honey and rice syrup were commercially available prior to November 2, 2000, when the investigation was initiated.[15] No parties submitted any evidence to the Department demonstrating that blends of honey and rice syrup were available prior to the initiation of the investigation. Additionally, evidence on the record shows that the first imports of blends of honey and rice syrup to the United States from the PRC did not occur until August 2004.[16]

Petitioners argue that blends of honey and rice syrup were neither commercially developed nor commercially available when the antidumping investigation was initiated on November 2, 2000.[17] As discussed in the *Initiation FR,* Petitioners note that none of the three U.S. trade investigations between 1993 and 2001 discussed blends of honey and rice syrup,[18] and therefore they provide no evidence of blends of honey and rice syrup being available at the time the investigation was initiated.[19] Petitioners also point to the Port Import Export Reporting Service (''PIERS'') ship manifest summaries which show that the first shipments of blends of honey and rice syrup from the PRC did not enter the United States until almost four years after the investigation was initiated.[20] Petitioners also submitted an affidavit from an industry expert stating that prior to the investigation the domestic industry did not produce blends of honey and rice syrup, and had no knowledge of any imports of such a product.[21] Petitioners also note that several studies on honey adulteration published from 1991 through 2002 do not mention rice syrup as an adulterant, including the National Honey Board's (which is overseen by the U.S. Department of Agriculture and conducts market research) 2002 Honey Attitude and Usage Study, which does not refer to any blend of honey with any non-honey sweeteners being available at the time of the investigation.[22]

Anhui Hundred argues that ''honey syrup'' (blends of honey and rice syrup) is not a newly developed product designed to circumvent the *Order* as demonstrated by the fact that both honey and honey preparations existed before the investigation and that both the Petitioners and the Department knew of their existence.[23] Further, Anhui Hundred contends that despite this knowledge, Petitioners chose to include in the scope only preparations containing over 50 percent honey.[24] However, as discussed above, there is no evidence on the record that honey and rice syrup was blended together or commercially available at the time of the investigation, and as discussed further below, the blends of honey and rice syrup under consideration in this inquiry are a materially different product than other honey blends.

Anhui Hundred also notes that Petitioners did not bring an anticircumvention request prior to this proceeding in 2011, even though, according to PIERS data, blends of honey and rice syrup have been imported since as early as 2003.[25] Similarly, Anhui Hundred argues that two rulings by Customs and Border Protection (''CBP'') demonstrate that

[9] As discussed in the immediately preceding paragraph, in *Candles,* the Department considered whether the merchandise at issue was materially different from the merchandise contemplated by the order in so far as the later-developed merchandise was the result of a significant technological development or a significant alteration of the merchandise involving commercially significant changes.

[10] See H.R. Conf. Rep No. 576, 100th Cong., 2d Sess., at 603 (1988), reprinted in 1988 U.S.C.C.A.A.N. 1547, 1636.

[11] *See Honey from Argentina and China,* Inv. Nos. 701–TA–402 and 731–TA–892–893 (Final), USITC Pub. 3470 (''ITC Report'') at I–6.

[12] *See id.*

[13] *See* Petitioners' Supplemental Questionnaire Response dated, November 21, 2011, (''Petitioners' Supp. QR'') at 6, and Exhibit 4.

[14] Economic adulteration is the practice of dishonestly diluting pure honey with a less expensive substitute and then reselling the blend to unknowing consumers as pure honey. *See* Petitioners' Questionnaire Response dated March 9, 2012, (''Petitioners' QR'') at 18–20, explaining the history of the honey market and economic adulteration. *See also* Petitioners' Request for Scope/Circumvention Inquiry on Honey Syrup from China and Opposition to Anhui Hundred Scope Request on Honey Syrup from China submitted June 8, 2011, at 7–8, stating that ''it is illegal under federal and most states' law to sell, as ''honey,'' honey that has been blended with any other type of sweetener,'' and citing 21 U.S.C. section 381(a).

[15] *See* Questionnaire from the Department To ALL PARTIES, RE: Anti-Circumvention Inquiry of Honey-Rice Syrup Blends from the People's Republic of China (''PRC''), dated February 3, 2012, at 4.

[16] *See* Petitioners' Supp. Response at 11–12.

[17] *See id.* at 5.

[18] *See* ITC Report, the ITC's 1993–94 ''safeguard'' investigation, *Honey from China,* Inv. No. TA–406–13, USITC Pub. 2715 (Jan. 1994) (''1994 ITC Report''), and the 1994–95 AD investigation, *Honey from the People's Republic of China,* Inv. No. 731–TA–722 (Preliminary), USITC Pub. 2832 (Nov. 1994) (''ITC AD Report'').

[19] *See* Petitioners' QR at 6–7, and *Initiation FR* at 77482–3.

[20] *See* Petitioners' QR at 8.

[21] *See id.* at 8, citing Petitioners' Supp. QR at Exhibit 3.

[22] *See* Petitioners' QR at 8–9, and *Initiation FR* at 77483.

[23] *See* Anhui Hundred Opposition at 2–3.

[24] *See id.* at 3.

[25] *See id.*

blends of honey and rice syrup were identified as early as 2005, and, therefore, cannot be considered a newly-developed product.[26] However, there is no prescribed time limit for a party to bring a later-developed merchandise claim. Additionally, as explained above, the relevant question is whether the product in question was developed after the start of the investigation, not at what time the product was developed in relation to the anticircumvention inquiry itself.

Petitioners argue that the evidence highlighted by Anhui Hundred (*e.g.* the PIERS data) in fact shows that blends of honey and rice syrup did not arrive on the U.S. market until four years after the initiation of the investigation.[27] Additionally, Petitioners contend that the CBP challenges made in 2005 and 2009 placed on the record by Anhui Hundred only show that blends of honey and rice syrup were present in those years, but do not show that they were commercially available when the investigation initiated.[28]

Based on the three U.S. trade investigations,[29] several honey adulteration studies which do not mention the existence of blends of honey and rice syrup at all,[30] a National Honey Board Survey,[31] PIERS data,[32] and the affidavit of an industry expert,[33] the Department determines that blends of honey and rice syrup were not commercially available at the time the investigation was initiated. Instead, the PIERS data demonstrates blends of honey and rice syrup first became commercially available in the United States in August of 2004.[34]

Materially Different Merchandise

Next, the Department analyzed whether blends of honey and rice syrup are materially different from those under consideration at the time of the investigation. We begin our analysis by noting that the scope specifically addresses ''artificial honey,'' and includes artificial honeys ''containing more than 50 percent natural honey by weight.'' According to the ITC Report, artificial honeys are ''mixtures based on sucrose, glucose, or invert sugar, generally flavored or colored and prepared to imitate natural honey.'' [35] Based on this description, blends of honey and rice syrup comprised of over 50 percent honey qualify as artificial honey because they are composed of sucrose, glucose and water, and imitate honey as discussed below in the *Physical Characteristics* section, and therefore fall within the scope of this *Order*.

However, Petitioners argue that the Department's analysis should not end there because blends of honey and rice syrup did not exist at the time of the *Order,* and they are materially different from the artificial honey contemplated by the scope because they are not susceptible to current testing methods, as are other honey blends.[36] Petitioners explain that at the time the *Order* was written, scientific testing existed which could detect the amount of cane or corn syrup in a honey blend, because honey is a C–3 sugar which is different from corn syrup and cane syrup which are C–4 sugars, and this difference was detectable via testing.[37] These tests were developed to prevent pure honey from being diluted by cheaper non-honey sweeteners (*e.g.* cane and corn syrup) which existed prior to the initiation of the investigation, and being resold as pure honey to unwitting consumers (a process known as honey adulteration).[38] However, these testing methods, according to Petitioners, cannot distinguish the amount of rice syrup in a honey and rice syrup blend, because rice syrup and honey are both C–3 sugars.[39] As a result, Petitioners' argue this evidence demonstrates that neither the ITC nor Petitioners considered excluding blends of honey and C–3 sugars containing 50 percent or less by weight when there was no way to determine if such products fall within the scope's 50 percent threshold.[40]

The Department preliminarily determines that, while honey blends are contemplated by the *Order,* blends of honey and rice syrup are materially different from those blends because they are not made of C–4 sugars. This difference is important because the percentages present in the *Order* are premised on honey-sugar blends for which the percentage of honey and sugar are determinate. However, as demonstrated by Petitioners, the percentage of sugar in blends of honey and rice syrup is not determinate because one cannot identify the percentage of C–3 sugars blended with honey.[41] Put differently, without the ability to test for the relative amount of honey present in a blend of rice-syrup and honey, the ''50 percent natural honey by weight'' threshold in the scope is without meaning for blends of honey and rice syrup.

In conclusion, the Department finds that honey and rice syrup blends constitute later-developed merchandise, that is, merchandise developed after the honey investigation and this merchandise is materially different from the merchandise under consideration at the time of the investigation and, in particular, different from the honey blends specifically excluded under the *Order*.

Whether Blends of Honey and Rice Syrup Should Be Included Within the Scope of the Order

As noted above, section 781(d)(1) provides that in determining whether merchandise developed after an investigation is within the scope of an antidumping duty order, the Department shall consider whether blends of honey and rice syrup, regardless of the percentage of honey they contain, have the same general physical characteristics, same ultimate user expectations, same ultimate use, uses the same channels of trade, and same advertisement and display as the products covered by the scope.

(1) Physical Characteristics

With regard to whether blends of honey and rice syrup comprised of any percentage of honey share the same physical characteristics as honey products covered by the language of the *Order,* Petitioners have presented information indicating that there is no substantial difference in physical characteristics. Petitioners argue that the test report submitted by Anhui Hundred shows that blends of honey and rice syrup are indistinguishable from in-scope blends of honey and rice syrup in terms of sugar and water content.[42] Additionally, in appearance, Anhui Hundred's test report describes the 90 percent rice syrup, ten percent honey blend as ''a translucent, straw colored, thick liquid with no visible foreign substances,'' which according to Petitioners is a description which applies equally to in-scope blends of honey and rice syrup and pure natural honey.[43]

Secondly, Petitioners note that Anhui Hundred (doing business as ''Anhui

[26] *See id.* at 4, and Exhibit 1.

[27] *See id.*

[28] *See id.* at 10.

[29] *See* the ITC Report, 1994 ITC Report, and the ITC AD Report.

[30] *See* Petitioners' Supp. QR. at 14–16, and Exhibits 5–9.

[31] *See* Petitioners' QR at 8–9.

[32] *See* Anhui Hundred Opposition at 2–3.

[33] *See* Petitioners QR at Exhibit 3.

[34] *See* Petitioners' Supp. Response at 11–12.

[35] *See* ITC Report at I–6.

[36] Petitioners' Supp. Response at 11.

[37] *See id.* at 7–8.

[38] *See* Petitioners' QR at 18–9.

[39] *See id.*

[40] *See* Petitioners' Supp. Response at 11.

[41] *See* Petitioners' QR at 18–23.

[42] *See id.* at 13.

[43] *See id.* at 14–15.

Freedom Foods'') uses the same six descriptions to market blends of honey and rice syrup regardless of whether the blends are in-scope or out-of-scope, meaning the products must have the same physical characteristics.[44] Additionally, Petitioners provided evidence from the Web sites of other PRC producers of blends of honey and rice syrup, showing that they too market blends of honey and rice syrup using the identical descriptions, for their blends of honey and rice syrup ranging from ten percent honey to 90 percent honey.[45]

Thirdly, Petitioners state no scientific test exists to effectively distinguish between in-scope and out-of-scope blends of honey and rice syrup based on differences in those products' physical characteristics.[46] Therefore, Petitioners argue, because all blends of honey and rice syrup produce the same test results, where a tester can determine a mixture of honey and rice syrup is present, but not in what ratio, for purposes of the analysis above, the Department must find that blends of honey and rice syrup have identical physical characteristics to in-scope blends and honey.[47] Based on all of the above evidence, the Department finds Petitioners have demonstrated honey and rice syrup blends, regardless of the percentage of honey they contain, have the same physical characteristics as honey.

(2) Expectations of the Ultimate Users

Petitioners argue that the ultimate users of blends of honey and rice syrup have the same expectations as users of honey. Based on the affidavit of an industry expert, Petitioners argue that because blends of honey and rice syrup contain the word ''honey,'' the ultimate consumers expect ''a honey based sweetener that looks, smells, and tastes like honey'' regardless of the relative percentage of honey they contain.[48] Petitioners also placed evidence on the record from various producers of blends of honey and rice syrup, showing that they advertise and market blends of honey and rice syrup as having the same physical characteristics, therefore, consumers cannot have any differing expectations for these products, other than price.[49] Additionally, Petitioners put National Honey Board surveys on the record showing consumers often mistake honey blends with honey, and there is no evidence in the reports to suggest consumers can distinguish between in-scope and out-of scope blends.[50] Based on this evidence, the Department finds that the Petitioners have demonstrated through National Honey Board surveys and advertising language on multiple PRC exporter Web sites, and an affidavit by an industry expert that consumers have similar expectations for blends of honey and rice syrup regardless of the percentage of honey they contain, as well as for pure honey.

(3) Ultimate Use of Merchandise

Petitioners state that all blends of honey and rice syrup have the same ultimate uses as in-scope honey, and cite to a National Honey Board survey which shows that all blends of honey and rice syrup are consumed for baking, and on/in breads, pancakes and cereal.[51] Petitioners also placed a series of advertisements on the record, showing both in-scope and out-of-scope blends having identical uses (*e.g.* toppings for pancakes, bread, *etc.*).[52]

Anhui Hundred argues that blends of honey and rice syrup are not substitutes for pure honey, because blends of honey and rice are only sold to commercial bakeries and manufacturers, and are not for retail sale.[53] However, the Department notes that the *Order* is not limited to pure honey. Furthermore, commercial bakeries and manufacturers also use pure honey,[54] other in-scope artificial honey blends,[55] and both in-scope and out-of-scope blends of honey and rice syrup.[56] Additionally, as discussed below in the *Channels of Trade* and *Advertising* sections, there is evidence on the record that blends of honey and rice syrup are in fact sold for retail uses, in contrast to Anhui Hundred's contention that such blends are not for retail sale.[57] Further, the Department finds that even if blends of honey and rice syrup were not sold for retail use that would not mean that they do not have similar uses, since they both are used for commercial baking. Based on this evidence, the Department finds that blends of honey and rice syrup have the same ultimate uses as honey.

(4) Channels of Trade

Petitioners contend that blends of honey and rice syrup, regardless of the honey content, are used by industrial bakers, or sold in health food stores, or grocery stores in honey bear bottles.[58] Anhui Hundred similarly contends that blends of honey and rice syrup are sold to ''bakeries, and commercial food processors as a sweetener, while small quantities may be repackaged for retail sale to individual consumers.''[59] Petitioners state that producers of blends of honey and rice syrup, including Anhui Hundred, market blends of honey and rice syrup in honey bear bottles and other retail containers on Internet Web sites, as well as steel drums.[60] Further, Petitioners argue, even if blends of honey and rice syrup were only sold to commercial bakeries and processed food manufacturers, both less than- and greater than-50 percent blends still travel through the same channels of trade to reach those consumers because they are marketed the same on Web sites and in the same containers.[61] Finally, Petitioners note that Anhui Freedom Foods sells all of its blends of honey and rice syrup, regardless of honey content, in any packaging the consumer wishes, from squeeze bottles, to steel drums.[62] Based on the evidence on the record, including multiple Web sites showing blends of honey and rice syrup being sold in the same containers regardless of the percentage of honey they contain,[63] and Anhui Hundred's own submission stating that blends of honey and rice syrup are consumed by bakeries and commercial food processors,[64] the

[44] *See id.* at Exhibit 17. Petitioners explain that Anhui markets both in-scope and out of scope blends of rice syrup using the same six descriptions: ''Appearance: white~yellow, no visible impurities by naked eyes''; ''Smell: mildly sweet, with the flavor of honey''; ''Taste'' similar to honey very much;'' ''Moisture 18.5% max.''; ''Fructose/reducing sugar 48% min.''; and Color is ''30min.''

[45] *See id.* at 16–18. For example, Wuhu Tongli Foods markets both its 90 percent honey to rice syrup blend and its 10 percent honey to rice syrup blend the same, stating ''regardless of the honey-to-rice syrup ratio selected for the blend, ''it taste similar to honey very much.'' *See id.* at Exhibit 20.

[46] *See id.* at 18–25.

[47] *See id.* at 23.

[48] *See id.* at 26.

[49] *See id.* at 31.

[50] *See* Petitioners' Supp. Response at 18–19, and Exhibits 13–15.

[51] *See id.* at 32.

[52] *See id.* at 32–34.

[53] *See* Anhui Hundred Opposition at 5.

[54] *See, e.g.,* ITC Report at I–5 stating, ''honey appears in a variety of products such as bread and other baked goods, cereal, condiments, candy, medicine, and even shampoo.''

[55] *See id.* at I–6, stating in-scope artificial honey is used as a ''direct substitute for natural honey.''

[56] *See* Anhui Scope Request at 3, stating ''the vast majority of honey syrup consumed world-wide is used by bakeries and commercial food processors as a sweetener * * *''; *see also* Petitioners' Supp. QR, at Exhibit 14, the National Honey Board 2006 Survey indicating honey and rice syrup blends would be used for baking and as spreads for bread and pancakes.

[57] *See, e.g.,* Petitioners' Supp. QR at Exhibits 17, 20–22, showing Web sites selling blends of honey and rice syrup from PRC producers in jars and traditional honey bears for individual use and sale.

[58] *See* Petitioners' QR at 34–5.

[59] *See* Anhui Scope Request at 3.

[60] *See* Petitioners' QR at 35–6, and Exhibit 17.

[61] *See id.*

[62] *See id.* at 36.

[63] *See* Petitioners' Supp. QR at Exhibits 19–23, and Petitioners' Supp. Response at 28–30, and Attachments A, B, D.1, D.2, and E.

[64] *See* Anhui Scope Request at 3.

Department finds that the channels of trade for all ratios of blends of honey and rice syrup are also similar to those used for honey.

(5) Advertising

Petitioners argue that blends of honey and rice syrup, regardless of the percentage of honey they contain, are advertised and displayed in the same manner as in-scope honey. For example, Petitioners observe that Anhui Freedom Foods sells ''syrup honey'' and ''honey blended syrup'' in blends ranging from ten percent honey to at least 70 percent honey in containers which are identical in terms of size, listed applications and uses, advertising used, and channels of trade.[65] Petitioners note that the same is true for other PRC producers of blends of honey and rice syrup, which use identical labeling and advertising for both less than- and greater than-50 percent blends.[66] Petitioners also note that the packaging almost always prominently displays the word ''honey'' on the front, and is often in bear bottles so consumers associate it with pure honey.[67] Based on this evidence on the record, the Department finds that honey and rice syrup blends are advertised in the same or similar manner as honey.

Other Arguments by Anhui Hundred

Anhui Hundred also contends that Petitioners have not put any evidence on the record to support their claim that blends of honey and rice syrup have been sold as pure honey. The Department notes that it is not basing its circumvention finding on the contention that blends of honey and rice syrup are being fraudulently sold as pure honey, nor is that an element of the Department's later-developed merchandise analysis.

Finally, prior to the initiation, Anhui Hundred argued that initiation of an anticircumvention inquiry based on the lack of an enforceable test would set a bad precedent for future cases.[68] Anhui Hundred argues that including blends of honey and rice syrup would cause uncertainty about what products are included in the scope of the *Order* and which products are likely to be included in the future.[69] The Department does not find these arguments persuasive. First, Anhui has not provided any legal basis for these arguments. The Department has analyzed the statutorily mandated criteria and this is the correct focus of this anticircumvention inquiry. In addition, if the Department affirms this preliminary determination and finds all blends of honey and rice syrup are later-developed merchandise, it will amend the scope language to that affect in an unambiguous manner. Further, a revised scope would clear up some of the current uncertainty around the *Order,* as demonstrated by the CBP challenges cited above.

Anhui Hundred also argues that a lack of a test does not necessarily make an order unenforceable because the composition of the merchandise could be verified through manufacturing and shipping documentation, as well as on-site verifications.[70] Once again, there is no legal basis for the Anhui Hundred's argument. The Statute does not require the Department to make a determination of unenforceability before making an affirmative circumvention determination. In any event, the evidence does not support Anhui Hundred's argument because in the case of the honey *Order,* CBP's ability to test the composition of the merchandise has been a tool in the enforcement of the *Order.*[71] In this regard, Petitioners stated that they specifically agreed to the 50 percent threshold in the scope because they thought it would be enforceable.[72] CBP's ability to continue to enforce the *Order* has now been called into question because of the development of blends of honey and rice syrup which are not susceptible to current testing methods.

Conclusion

Based on the above information, the Department finds that the blends of honey and rice syrup are later-developed merchandise. The evidence on the record demonstrates that blends of honey and rice syrup were not commercially available at the time that the investigation was initiated and these blends are materially different from the blends contemplated by the *Order.* Additionally, all honey rice syrup blends, regardless of the percentage of honey they contain, meet the criteria under sections 781(d)(1)(A–E) of the Act.

The evidence on the record of this inquiry, taken as a whole, leads to our preliminary determination that U.S. imports of blends of honey and rice syrup are later-developed products of the subject merchandise, within the meaning of section 781(d) of the Act, and are within the scope of the *Order.*

Suspension of Liquidation

Section 351.225(l)(2) of the Department's regulations states: ''If liquidation has not been suspended, the Secretary will instruct CBP to suspend liquidation and to require a cash deposit of estimated duties, at the applicable rate, for each unliquidated entry of the product entered, or withdrawn from warehouse, for consumption on or after the date of initiation of the scope inquiry.'' In accordance with section 351.225(l)(2) of the Department's regulations, we will instruct CBP to suspend liquidation of all entries of blends of honey and rice syrup, from the PRC that were entered, or withdrawn from warehouse, for consumption on or after December 7, 2011, the date of initiation of this anticircumvention inquiry.

The merchandise subject to suspension of liquidation based on this determination is all blends of honey and rice syrup regardless of the percentage of honey contained in the blend. In accordance with sections 735(c) and 781(b) of the Act and 19 CFR 225(i)(3), we will direct CBP to suspend liquidation and require cash deposits of estimated duties, at the rate applicable to the exporter, on all unliquidated entries of all honey and rice syrup blends regardless of the percentage of honey they contain, that were entered, or withdrawn from warehouse, for consumption on or after December 7, 2011, the date of initiation of the circumvention inquiry. This suspension of liquidation will remain in effect until further notice.

International Trade Commission Notification

In accordance with section 781(d) of the Act, we have notified the ITC of the proposed inclusion of blends of honey and rice syrup in the antidumping duty order on honey from the PRC.[73] The ITC has not yet determined if consultations are not necessary.

Public Comment

Case briefs from interested parties may be submitted no later than 30 days from the publication of this notice. Rebuttal briefs must be limited to issues raised in such briefs and may be filed no later than five days after the deadline for filing case briefs.

Additionally, pursuant to 19 CFR 351.310(c), interested parties who wish to request a hearing, or to participate if one is requested, must submit a written

[65] *See id.* at 37.

[66] *See id.*

[67] *See id.*

[68] *See* Anhui Hundred Opposition at 5–9.

[69] *See id.* at 6.

[70] *See id.* at 7.

[71] *See* Petitioners' Supp. QR at Exhibit 26.

[72] *See id.* at 11.

[73] *See* the Department's letter to the ITC dated May 14, 2012, Re: *Anticircumvention Inquiry of the Antidumping Duty Order on Honey from the People's Republic of China.*

request to the Assistant Secretary for Import Administration, Room 1117, within 30 days of the date of publication of this notice. Requests should contain: (1) The party's name, address and telephone number; (2) the number of participants; and (3) a list of issues to be discussed.[74] Issues raised in the hearing will be limited to those raised in the respective case and rebuttal briefs.

Final Determination

The Department intends to issue the final determination no later than October 2, 2012. This determination is issued and published in accordance with section 781(d) of the Act and section 351.225(j) of the Department's regulations.

Dated: June 13, 2012.

Paul Piquado,

Assistant Secretary for Import Administration.

[FR Doc. 2012–15219 Filed 6–20–12; 8:45 am]

BILLING CODE 3510–DS–P

[74] *See Id.*

DEPARTMENT OF COMMERCE

International Trade Administration

[C–570–978]

High Pressure Steel Cylinders From the People's Republic of China: Countervailing Duty Order

AGENCY: Import Administration, International Trade Administration, Department of Commerce.

SUMMARY: Based on affirmative final determinations by the Department of Commerce (the ''Department'') and the International Trade Commission (''ITC''), the Department is issuing a countervailing duty order on high pressure steel cylinders (''steel cylinders'') from the People's Republic of China (''PRC'').

DATES: *Effective Date:* June 21, 2012.

FOR FURTHER INFORMATION CONTACT: David Layton or Christopher Siepmann, AD/CVD Operations, Office 1, Import Administration, International Trade Administration, U.S. Department of Commerce, 14th Street and Constitution Avenue NW., Washington, DC 20230; telephone: (202) 482–0371 and (202) 482–7958, respectively.

Background

On May 7, 2012, the Department published its final determination in the countervailing duty investigation of steel cylinders from the PRC. *See High Pressure Steel Cylinders From the People's Republic of China: Final Affirmative Countervailing Duty Determination,* 77 FR 26738 (May 7, 2012).

On June 14, 2012, the ITC notified the Department of its final determination pursuant to section 705(b)(1)(A)(i) of the Tariff Act of 1930, as amended (''the Act''), that an industry in the United States is materially injured by reason of subsidized imports of subject merchandise from the PRC. *See High Pressure Steel Cylinders From China,* USITC Pub. 4328, Investigation Nos. 701–TA–480 and 731–TA–1188 (Final) (June 2012).

Scope of the Order

The merchandise covered by the scope of the order is seamless steel cylinders designed for storage or transport of compressed or liquefied gas (''high pressure steel cylinders''). High pressure steel cylinders are fabricated of chrome alloy steel including, but not limited to, chromium-molybdenum steel or chromium magnesium steel, and have permanently impressed into the steel, either before or after importation, the symbol of a U.S. Department of Transportation, Pipeline and Hazardous Materials Safety Administration (''DOT'')-approved high pressure steel cylinder manufacturer, as well as an approved DOT type marking of DOT 3A, 3AX, 3AA, 3AAX, 3B, 3E, 3HT, 3T, or DOT–E (followed by a specific exemption number) in accordance with the requirements of sections 178.36 through 178.68 of Title 49 of the Code of Federal Regulations, or any subsequent amendments thereof. High pressure steel cylinders covered by these orders have a water capacity up to 450 liters, and a gas capacity ranging from 8 to 702 cubic feet, regardless of corresponding service pressure levels and regardless of physical dimensions, finish or coatings.

Excluded from the scope of the order are high pressure steel cylinders manufactured to U–ISO–9809–1 and 2 specifications and permanently impressed with ISO or UN symbols. Also excluded from the order are acetylene cylinders, with or without internal porous mass, and permanently impressed with 8A or 8AL in accordance with DOT regulations.

Merchandise covered by the order is classified in the Harmonized Tariff Schedule of the United States (''HTSUS'') under subheading 7311.00.00.30. Subject merchandise may also enter under HTSUS subheadings 7311.00.00.60 or 7311.00.00.90. Although the HTSUS subheadings are provided for convenience and customs purposes, the written description of the merchandise under the order is dispositive.

Countervailing Duty Order

In accordance with section 705(d) of the Act, the ITC has notified the Department of its final determination that the industry in the United States producing steel cylinders is materially injured by reason of subsidized imports of steel cylinders from the PRC. Therefore, in accordance with section 705(c)(2) of the Act, we are publishing this countervailing duty order.

As a result of this order, countervailing duties will be assessed on all unliquidated entries of steel cylinders from the PRC entered, or withdrawn from warehouse, for consumption on or after October 18, 2011, the date on which the Department published its preliminary affirmative countervailing duty determination in the **Federal Register**,[1] and before February 15, 2012, the date the Department instructed U.S. Customs and Border Protection (''CBP'') to discontinue the suspension of liquidation in accordance with section 703(d) of the Act. Section 703(d) of the Act states that the suspension of liquidation pursuant to a preliminary determination may not remain in effect for more than four months. Therefore, entries of steel cylinders made on or after February 15, 2012, and prior to the date of publication of the ITC's final determination in the **Federal Register** are not liable for the assessment of countervailing duties due to the Department's discontinuation, effective February 15, 2012, of the suspension of liquidation.

In accordance with section 706 of the Act, the Department will direct CBP to reinstitute the suspension of liquidation for steel cylinders from the PRC, effective the date of publication of the ITC's notice of final determination in the **Federal Register** and to assess, upon further advice by the Department pursuant to section 706(a)(1) of the Act, countervailing duties for each entry of the subject merchandise in an amount based on the net countervailable subsidy rates for the subject merchandise as noted below.

[1] *See High Pressure Steel Cylinders From the People's Republic of China: Preliminary Affirmative Countervailing Duty Determination and Alignment of Final Countervailing Duty Determination With Final Antidumping Duty Determination,* 76 FR 64301 (October 18, 2011).

Exporter/manufacturer	Net subsidy rate (percent)
Beijing Tianhai Industry Co., Ltd.; Tianjin Tianhai High Pressure Container Co., Ltd.; Langfang Tianhai High Pressure Container Co., Ltd.	15.81
All-Others	15.81

This notice constitutes the countervailing duty order with respect to steel cylinders from the PRC, pursuant to section 706(a) of the Act. Interested parties may contact the Department's Central Records Unit, Room 7046 of the main Commerce Building, for copies of an updated list of countervailing duty orders currently in effect.

This order is issued and published in accordance with section 706(a) of the Act and 19 CFR 351.211(b).

Dated: June 18, 2012.

Paul Piquado,

Assistant Secretary for Import Administration.

[FR Doc. 2012–15295 Filed 6–20–12; 8:45 am]

BILLING CODE 3510–DS–P

DEPARTMENT OF COMMERCE

International Trade Administration

[Application 12–00004]

Export Trade Certificate of Review

ACTION: Notice of Application for an Export Trade Certificate of Review Colombia Poultry Export Quota, Inc. (COLOM–PEQ).

SUMMARY: The Office of Competition and Economic Analysis, International Trade Administration, Department of Commerce, has received an application for an Export Trade Certificate of Review (''Certificate''). This notice summarizes the conduct for which certification is sought and requests comments relevant to whether the Certificate should be issued.

FOR FURTHER INFORMATION CONTACT: Joseph Flynn, Director, Office of Competition and Economic Analysis, International Trade Administration, (202) 482–5131 (this is not a toll-free number) or email at *etca@trade.gov.*

SUPPLEMENTARY INFORMATION: Title III of the Export Trading Company Act of 1982 (15 U.S.C. 4001–21) authorizes the Secretary of Commerce to issue Export Trade Certificates of Review. An Export Trade Certificate of Review protects the holder and the members identified in the Certificate from state and federal government antitrust actions and from private, treble damage antitrust actions for the export conduct specified in the Certificate and carried out in compliance with its terms and conditions. Section 302(b)(1) of the Export Trading Company Act of 1982 and 15 CFR 325.6(a) require the Secretary to publish a notice in the **Federal Register**, identifying the applicant and summarizing its proposed export conduct.

Request for Public Comments

Interested parties may submit written comments relevant to the determination whether a Certificate should be issued. If the comments include any privileged or confidential business information, it must be clearly marked and a nonconfidential version of the comments (identified as such) should be included. Any comments not marked ''privileged'' or ''confidential business information'' will be deemed to be nonconfidential.

An original and five (5) copies, plus two (2) copies of the nonconfidential version, should be submitted no later than 20 days after the date of this notice to: Export Trading Company Affairs, International Trade Administration, U.S. Department of Commerce, Room 7021X, Washington, DC 20230, or transmitted by email at *etca@trade.gov.*

Information submitted by any person is exempt from disclosure under the Freedom of Information Act (5 U.S.C. § 552). However, nonconfidential versions of the comments will be made available to the applicant if necessary for determining whether or not to issue the Certificate. Comments should refer to this application as ''Export Trade Certificate of Review, application number 12–00004.'' A summary of the application follows.

Summary of the Application

Applicant: Colombia Poultry Export Quota, Inc., c/o DTB Associates, LLP, 1700 Pennsylvania Avenue NW., Suite 200, Washington, DC 20006, (202) 684–2512.

Application No.: 12–00003.

Date Deemed Submitted: May 16, 2012.

Members (in addition to applicant): Colombia Poultry Export Quota, Inc. (hereinafter, ''COLOM–PEQ'') was formed by USA Poultry and Egg Export Council (USAPEEC) representing the poultry exporting industry of the United States of America and by Federacion Nacional de Avicultores representing the Colombian poultry industry. Their respective addresses are:

USA Poultry & Export Council, 2300 West Park Place Boulevard, Suite 100, Stone Mountain, GA 30087;

Federacion Nacional de Avicultores, Calle 67 No. 7–35 Oficina 610, Bogota, Colombia.

COLOM–PEQ seeks a Certificate of Review to engage in the Export Trade Activities and Methods of Operation described below in the following Export Trade and Export Markets.

Export Trade

Products: COLOM–PEQ plans to export poultry products as described in the Agricultural Tariff Schedule of the Republic of Colombia, as appended to the TPA, and including the following Colombian HTS Codes: 0207.1300.A—leg quarters [fresh or chilled] curators traseros [frescos o refrigerados]); 0207.1400A—leg quarters [frozen] (curators traseros [congelados]); 1602.3200.A—leg quarters, seasoned and frozen (curators traseros, sazonados y congelados).

Export Markets

Poultry products for which awards will be made will be exported to the Republic of Colombia.

1. Purpose

Colombia—U.S. Poultry Export Quota, Inc. (''COLOM–PEQ'') will manage on an open tender basis the tariff-rate quotas (TRQs) for poultry products granted by the Republic of Colombia to the United States under the terms of the TPA or any amended or successor agreement providing for Colombian TRQs for poultry from the United States of America.

Specifically, the TRQs for poultry products are set forth at Paragraph 6 of Appendix I of the General Notes of Colombia, Annex 2.3 to the TPA. COLOM–PEQ also will provide for distributions of the proceeds received from the tender process based on exports of poultry products (''the TRQ System'') to support the operation and administration of COLOM–PEQ and fund market access maintenance, market promotion and market competitiveness improvement, educational, scientific and technical projects for the respective benefits of the poultry industry of the United States and of the Sector Representative Association (''sector gremial representativo'') for poultry in the Republic of Colombia as defined in Article 2.6 of the Colombian Ministry of Agriculture and Rural Development Decree No. 0728 of April 13, 2012.

2. Implementation

A. *Administrator.* COLOM–PEQ shall contract with a third party Administrator who shall bear responsibility for administering the TRQ System, subject to general supervision

and oversight by the Board of Directors of COLOM–PEQ.

B. *Membership.* COLOM–PEQ's members under this certificate are the USA Poultry and Egg Export Council (USAPEEC) and Federacion Nacional de Avicultores, the Sector Representative Association (''sector gremial representativo'') for poultry in the Republic of Colombia.

C. *Open Tender Process.* COLOM–PEQ shall offer TRQ Certificates for duty-free shipments of chicken leg quarters to the Republic of Colombia solely and exclusively through an open tender process with certificates awarded to the highest bidders (''TRQ Certificates''). COLOM–PEQ shall hold tenders in accordance with tranches at least four times each year. The award of TRQ Certificates under the open tender process shall be determined solely and independently by the Administrator in accordance with Section I without any participation by the members of COLOM–PEQ or the COLOM–PEQ Board of Directors.

D. *Persons or Entities Eligible to Bid.* Any person or entity incorporated or with a legal address in the United States of America shall be eligible to bid in the open tender process.

E. *Notice.* The Administrator shall publish notice (''Notice'') of each open tender process to be held to award TRQ Certificates in the *Journal of Commerce* and, at the discretion of the Administrator, in other publications of general circulation within the U.S. poultry industry or in the Republic of Colombia. The Notice will invite independent bids and will specify (i) the total amount (in metric tons) that will be allocated pursuant to the applicable tender; (ii) the shipment period for which the TRQ Certificates will be valid; (iii) the date and time by which all bids must be received by the Administrator in order to be considered (the ''Bid Date''); and (iv) a minimum bid amount per ton, as established by the Board of Directors, to ensure the costs of administering the auction are recovered. The Notice normally will be published not later than 30 business days prior to the first day of the tender process and will specify a Bid Date that is at least ten (10) business days after the date of publication of the Notice. The Notice will specify the format for bid submissions. Bids must be received by the Administrator not later than 5:00 p.m. EST on the Bid Date.

F. *Contents of Bid.* The bid shall be in a format established by the Administrator and shall state (i) the name, address, telephone and facsimile numbers, and email address of the bidder; (ii) the quantity of poultry products bid, in an amount stated in metric tons or fractions thereof; (iii) the bid price in U.S. dollars per metric ton; and (iv) the total value of the bid. The bid form shall contain a provision that must be signed by the bidder, agreeing that (i) any dispute that may arise relating to the bidding process or to the award of TRQ Certificates shall be settled by arbitration administered by the American Arbitration Association in accordance with its Commercial Arbitration Rules; and (ii) judgment on any award rendered by the arbitrator may be entered in any court having jurisdiction thereof.

G. *Performance Security.* The bidder shall submit with each bid a performance bond, irrevocable letter of credit drawn on a U.S. bank, cashier's check, wire transfer or equivalent security, in a form approved and for the benefit of an account designated by the Administrator, in the amount of $50,000 or the total value of the bid, whichever is less. The bidder shall forfeit such performance security if the bidder fails to pay for any TRQ Certificates awarded within five (5) business days. The bidder may chose to apply the performance security to the price of any successful bid, or to retain the performance security for a subsequent open tender process. Promptly after the close of the open tender process, the Administrator shall return any unused or non-forfeited security to the bidder.

H. *Confidentiality of Bids.* The Administrator shall treat all bids and their contents as confidential. The Administrator shall disclose information about bids only to (a) an external auditor retained for the purpose of auditing auction results and proceeds; (b) an authorized neutral third party or (c) an authorized government official of the United States or of the Republic of Colombia and only as necessary to ensure the effective operation of the TRQ System. However, after the issuance of all TRQ Certificates from an open tender process, the Administrator shall notify all bidders and shall disclose publicly (i) the total tonnage for which TRQ Certificates were awarded, and (ii) the average price and lowest price per metric ton of all successful bids.

I. *Award of TRQ Certificates.* The Administrator shall award TRQ Certificates for the available tonnage to the bidders who have submitted the highest price conforming bids. If two or more bidders have submitted bids with identical prices, the Administrator shall divide the remaining available tonnage in proportion to the quantities of their bids, and offer each TRQ Certificates in the resulting tonnages. If any bidder declines all or part of the tonnage offered, the Administrator shall offer that tonnage first to the other tying bidders, and then to the next highest bidder.

J. *Payment for TRQ Certificates.* Promptly after being notified of a TRQ award and within the time specified in the Notice, the bidder shall pay the full amount of the bid, either by wire transfer or by certified check, to an account designated by the Administrator. If the bidder fails to make payment within five (5) days, the Administrator shall revoke the award and award the tonnage to the next highest bidder(s).

K. *Delivery of TRQ Certificates.* The Administrator shall establish an account for each successful bidder in the amount of tonnage available for TRQ Certificates. Upon request, the Administrator will issue TRQ Certificates in the tonnage designated by the bidder, consistent with the balance in that account. The TRQ Certificate shall state the delivery period for which it is valid.

L. *Transferability.* TRQ Certificates shall be freely transferable except that (i) any TRQ Certificate holder who intends to sell, transfer or assign any rights under that Certificate shall publish such intention on a Web site maintained by the Administrator at least three (3) business days prior to any sale, transfer or assignment; and (ii) any TRQ holder who sells, transfers or assigns its rights under a TRQ Certificate shall provide the Administrator with notice and a copy of the sale, transfer or assignment within three (3) business days.

M. *Deposit of Proceeds.* The Administrator shall cause all proceeds of the open tender process to be deposited into interest-bearing accounts in a financial institution approved by the COLOM–PEQ Board of Directors.

N. *Disposition of Proceeds.* The proceeds of the open tender process shall be applied and distributed as follows:

i. The Administrator shall pay from tender proceeds, as they become available, all operating expenses of COLOM–PEQ, including legal, accounting and administrative costs of establishing and operating the TRQ System, as authorized by the Board of Directors.

ii. Of the proceeds remaining at the end of each year of operations after all costs described in (i) above have been paid—

1. Fifty percent (50%) shall be distributed to fund market access, market promotion, educational, scientific and technical projects to

benefit the United States poultry industry. COLOM–PEQ shall accept proposals for the funding of projects approved by resolution of the Board of Directors of USAPEEC.

2. Fifty percent (50%) shall be distributed to fund direct market development or market competitiveness improvement projects to benefit the Sector Representative Association (''sector gremial representativo'') for poultry in the Republic of Colombia in accordance with Article 2.6 of the Colombian Ministry of Agriculture and Rural Development Decree No. 0728 of April 13, 2012.

O. *Arbitration of Disputes.* Any dispute, controversy or claim arising out of or relating to the TRQ System or the breach thereof, including inter alia, a Member's qualification for distribution, interpretation of documents, or of the distribution itself, shall be settled by arbitration administered by the American Arbitration Association in accordance with its Commercial Arbitration Rules, and judgment on the award rendered by the arbitrator may be entered in any court having jurisdiction thereof.

P. *Confidential Information.* The Administrator shall maintain as confidential all export documentation or other business sensitive information submitted in connection with application for COLOM–PEQ membership, bidding in the open tender process, or requests for distribution of proceeds, where such documents or information has been marked ''Confidential'' by the person making the submission. The Administrator shall disclose such information only to another neutral third party or authorized government official of authorized government official of the United States or of the Republic of Colombia and only as necessary to ensure the effective operation of the TRQ System or where required by law (including appropriate disclosure in connection with the arbitration of a dispute).

Q. *Annual Reports.* COLOM–PEQ shall publish an annual report including a statement of its operating expenses and data on the distribution of proceeds, as reflected in the audited financial statement of the COLOMPEQ TRQ System.

Dated: June 15, 2012.

Joseph E. Flynn,

Director, Office of Competition and Economic Analysis.

[FR Doc. 2012–15120 Filed 6–20–12; 8:45 am]

BILLING CODE P

DEPARTMENT OF COMMERCE

National Oceanic and Atmospheric Administration

Proposed Information Collection; Comment Request; Understanding Recreational Angler Attitudes and Preferences for Saltwater Fishing

AGENCY: National Oceanic and Atmospheric Administration (NOAA), Commerce.

ACTION: Notice.

SUMMARY: The Department of Commerce, as part of its continuing effort to reduce paperwork and respondent burden, invites the general public and other Federal agencies to take this opportunity to comment on proposed and/or continuing information collections, as required by the Paperwork Reduction Act of 1995.

DATES: Written comments must be submitted on or before August 20, 2012.

ADDRESSES: Direct all written comments to Jennifer Jessup, Departmental Paperwork Clearance Officer, Department of Commerce, Room 6616, 14th and Constitution Avenue NW., Washington, DC 20230 (or via the Internet at *JJessup@doc.gov).*

FOR FURTHER INFORMATION CONTACT: Requests for additional information or copies of the information collection instrument and instructions should be directed to Kristy Wallmo, 301–427–8190 or *kristy.wallmo@noaa.gov.*

SUPPLEMENTARY INFORMATION:

I. Abstract

This request is for a new collection of information.

The objective of the survey will be to understand the range of attitudes, preferences, and concerns that recreational anglers hold towards saltwater fishing.

The National Marine Fisheries Service, Office of Science and Technology will conduct this survey to improve our understanding of anglers' expectations and how they may change with fish stock recovery. As more stocks recover, the survey is well-timed to inform fisheries management on anglers' satisfaction with current management and the types of goals and objectives that should be pursued (e.g., in developing guidelines). Results of the survey will be used to inform fisheries management and planning and establish a baseline for outreach and education.

II. Method of Collection

The survey will be conducted using two modes: mail and Internet.

III. Data

OMB Control Number: None.

Form Number: None.

Type of Review: Regular submission (request for a new information collection).

Affected Public: Individual recreational fishing permit holders.

Estimated Number of Respondents: 6,000.

Estimated Time per Response: 20 minutes.

Estimated Total Annual Burden Hours: 2,000.

Estimated Total Annual Cost to Public: $0 in recordkeeping/reporting costs.

IV. Request for Comments

Comments are invited on: (a) Whether the proposed collection of information is necessary for the proper performance of the functions of the agency, including whether the information shall have practical utility; (b) the accuracy of the agency's estimate of the burden (including hours and cost) of the proposed collection of information; (c) ways to enhance the quality, utility, and clarity of the information to be collected; and (d) ways to minimize the burden of the collection of information on respondents, including through the use of automated collection techniques or other forms of information technology.

Comments submitted in response to this notice will be summarized and/or included in the request for OMB approval of this information collection; they also will become a matter of public record.

Dated: June 15, 2012,

Gwellnar Banks,

Management Analyst, Office of the Chief Information Officer.

[FR Doc. 2012–15127 Filed 6–20–12; 8:45 am]

BILLING CODE 3510–22–P

DEPARTMENT OF COMMERCE

National Oceanic and Atmospheric Administration

RIN 0648–BC27

New England Fishery Management Council; Northeast Multispecies Fishery; Notice of Intent to Prepare an Environmental Impact Statement (EIS); Request for Comments

AGENCY: National Marine Fisheries Service (NMFS), National Oceanic and Atmospheric Administration (NOAA), Commerce.

ACTION: Notice; intent to prepare an environmental impact statement; request for comments.

SUMMARY: The New England Fishery Management Council (Council) announces its intention to prepare, in cooperation with NMFS, an EIS in accordance with the National Environmental Policy Act (NEPA). An EIS may be necessary to provide analytical support for the fishing year 2013–2015 catch allowances and management measures for the Northeast (NE) Multispecies Fishery Management Plan (FMP). Analysis may also be necessary to evaluate alternatives for mitigating FMP interactions with threatened and endangered distinct population segments of Atlantic sturgeon. This notice is to alert the interested public of the potential development of a Draft EIS, and to outline opportunity for public participation in that process.

DATES: Written comments must be received on or before 5 p.m., e.s.t., on July 23, 2012.

ADDRESSES: Written comments may be sent by any of the following methods:

- *Email: 2013.groundfish.actionNOI@noaa.gov.*
- *Mail or hand delivery:* Mr. Paul Howard, New England Fishery Management Council, 50 Water St., Mill 2, Newburyport, MA 01950. Mark the outside of the envelope ''2013.groundfish.actionNOI''; or
- *Fax:* (978) 465–3116.

Additional information may be obtained from the Council office at the previously provided address, by request to the Council by telephone (978) 465–0492, or via the Internet at *http://www.nefmc.org.* Comments may be provided at upcoming Council meetings. Meeting times and locations are listed on the Council's Web site: *http://www.nefmc.org.*

FOR FURTHER INFORMATION CONTACT: Mr. Paul Howard, New England Fishery Management Council, 50 Water St., Mill 2, Newburyport, MA 01950, (telephone 978–465–0492).

SUPPLEMENTARY INFORMATION: The Council, working through its public participatory committee and meeting processes, anticipates development of actions that may be analyzed through an EIS, or analyzed through an Environmental Assessment (EA), dependent on addressing applicable criteria in Council of Environmental Quality regulations and guidance for implementing NEPA. The action may include the following measures:

1. Establishment of catch limits and management measures for certain stocks and species for the 2013, 2014, and possibly the 2015 fishing years, and;

2. Development of measures to minimize take and/or adverse impacts on threatened and endangered distinct population segments (DPS) of Atlantic sturgeon that interact with the NE multispecies fisheries.

These potential measures are described in further detail, as follows:

Catch Limits and Management Measures

The development of fishing year 2013, 2014, and possibly 2015 catch allowances and management measures has been initiated by the Council. It is expected that the action will likely be taken through an FMP framework adjustment process; however, it is possible an amendment to the FMP may be utilized, dependent on the final scope and scale of the action relative to the authority provided by the FMP for framework adjustment. The action is expected to be further developed throughout 2012. The Council recommendations are designed to be submitted to NMFS for review, approval, rulemaking and implementation in time for NMFS to implement the action by the start of the 2013 fishing year (May 1, 2013). The Council will provide advanced notice of development and decisionmaking meetings where the 2013–15 catch allowance and management measures will be discussed.

The Council may take action including, but not limited to, establishment of annual catch allowances for the commercial and recreational NE multispecies fisheries along with commercial and recreational fishery regulatory changes designed to ensure catch does not exceed the established allowances being concurrently implemented by the action. These catch and fishing measures are anticipated for the following groundfish species either throughout all northeastern U.S. waters, in U.S. waters subject to the U.S./Canada Resources Sharing Understanding, or as specified in broad stock areas, as indicated by parenthesis: Atlantic cod (George's Bank (GB) and Gulf of Maine (GOM) stocks); haddock (GB and GOM stocks); yellowtail flounder (Cape Cod/GOM, GB, and Southern New England/Mid-Atlantic (SNE/MA) Bight stocks); American plaice; witch flounder; Acadian redfish; white hake; windowpane flounder (GOM/GB and SNE/MA stocks); ocean pout; Atlantic wolffish; and Atlantic halibut.

The Council anticipates using this action to address requirements of the Magnuson-Stevens Fishery Conservation and Management Act (Magnuson-Stevens Act) and its national standards. Specifically, the Council intends to establish Annual Catch Limits (ACLs) based on Acceptable Biological Catch (ABC) advice from its Scientific and Statistical Committee (SSC) for commercial and recreational fisheries that catch these species. ACLs are designed to ensure stocks do not become overfished, are not subject to overfishing, and, where required, rebuild to target biomass levels. In addition, the Council anticipates taking action to end overfishing for stocks currently subject to overfishing: GOM and GB cod; GOM haddock; Cape Cod/GOM yellowtail flounder; GOM/GB windowpane flounder; and witch flounder. Ending overfishing may require reduction in catch allowances from currently established levels, changes in management measures, or both.

The Council intends to provide analysis of the positive and negative environmental impacts resulting from various alternatives under consideration for the previously mentioned species and objectives. The interested public is encouraged to participate in the development process and provide input on alternatives designed to achieve the previously described objectives. The Council will begin the catch and management measures specification process by soliciting comments during an initial scoping period, as proscribed in this notice. However, if the ongoing analysis indicates a Finding of No Significant Impact (FONSI) statement can be supported, the Council may provide notice in the **Federal Register** indicating it is not necessary to prepare an EIS and will instead develop an EA to provide the necessary NEPA analysis. It is expected that a new stock assessment for GOM cod will be completed and available for 2013–15 catch and management measures development process. The scientifically controversial components of the most recent assessment, conducted in December 2012, are planned to be addressed by this new assessment. The status of scientific controversy involving the available stock assessment information for GOM cod is expected to be a consideration in whether a FONSI can be supported. The Council will keep the public apprised of the ongoing NEPA analysis development as the catch and management measures process moves forward.

Atlantic Sturgeon Related Measures

NMFS published a final rule (77 FR 5880; February 6, 2012) to list Atlantic

sturgeon under the Endangered Species Act (ESA) as threatened in the Gulf of Maine DPS and as endangered in the New York Bight, Chesapeake Bay, Carolina, and South Atlantic DPSs. Atlantic sturgeon within these DPSs are known to interact with the NE multispecies fisheries.

Following the publication of the final listing rule, NMFS has initiated formal consultation under Section 7 of the ESA for the NE Multispecies FMP and is developing a comprehensive Biological Opinion to ascertain the level of impact the fishery may have on these three Atlantic sturgeon DPSs. As part of the Section 7 consultation, NMFS will determine if the NE multispecies fishery jeopardizes the continued existence of any or all of the DPSs, or if the level of interaction may adversely impact but does not jeopardize survival of the species in any or all of the DPSs. These determinations will result in the requirement to develop and implement measures required by the ESA: Either Reasonable and Prudent Alternatives (RPAs) to avert survival jeopardy, or Reasonable and Prudent Measures (RPMs) to mitigate adverse impact on the DPSs.

The Council anticipates that some level of action will be necessary to develop and implement either RPAs or RPMs following completion of NMFS's Section 7 consultation process. In anticipation of this action, the Council is soliciting public comment on the types of measures that may mitigate the take and interaction of Atlantic sturgeon by the NE multispecies fishery, as well as the positive and negative environmental effects analysis necessary to evaluate these alternatives. The Council may elect to develop Atlantic sturgeon-related measures in conjunction with 2013–2015 catch and management measures in an EIS. However, if a FONSI can be substantiated, the action needed to implement Atlantic sturgeon mitigation measures may be analyzed in an EA. The Council will keep the public apprised of the level of NEPA analysis being conducted in conjunction with Atlantic sturgeon-related measures, as development of the overall action occurs.

The timing for development and completion of Atlantic sturgeon-related mitigation measures is currently uncertain. Completion of the Section 7 consultation is necessary to determine the magnitude of impact the NE multispecies fishery has on the continued survival of Atlantic sturgeon from these DPSs. The consultation is planned to be completed by September 2012; the associated Biological Opinion will result in development of an Incidental Take Statement that will recommend RPAs or RPMs. These may include a process to develop and put in place mitigation measures by a time certain. The Council anticipates continued dialog with NMFS and the interested public regarding what requirements must be satisfied while consultation is ongoing and after consultation has been completed.

Public Comment

In addition to soliciting comment on this notice, the public will have the opportunity to comment on the measures and alternatives being considered by the Council through public meetings and public comment periods required by NEPA, the Magnuson-Stevens Act, and the Administrative Procedure Act.

The Council's process for developing ACLs, Atlantic sturgeon-related mitigation measures and NEPA-required analyses, in this case presumably one or more EISs, if necessary, will involve development work and meetings of the Groundfish Plan Development Team, Groundfish Committee, the SSC, the Recreational and Commercial fishery Advisory Panels, and the full Council. Information regarding the schedule for meetings, including agendas and meeting-related documents, involving these groups can be found on the Council's Web site: *http://www.nefmc.org/* or obtained by calling the Council office at (978) 465–0492.

Authority: 16 U.S.C. 1801 *et seq.*

Dated: June 15, 2012.

Carrie Selberg,

Acting Director, Office of Sustainable Fisheries, National Marine Fisheries Service.

[FR Doc. 2012–15229 Filed 6–20–12; 8:45 am]

BILLING CODE 3510–22–P

COMMODITY FUTURES TRADING COMMISSION

Renewal of the Technology Advisory Committee

AGENCY: Commodity Futures Trading Commission.

ACTION: Notice of Federal Advisory Committee Renewal.

SUMMARY: The Commodity Futures Trading Commission has determined to renew the charter of its Technology Advisory Committee.

FOR FURTHER INFORMATION CONTACT: Gail Scott, Committee Management Officer, at 202–418–5139. Written comments should be submitted to David A. Stawick, Secretary, Commodity Futures Trading Commission, Three Lafayette Centre, 1155 21st Street NW., Washington, DC 20581. Electronic comments may be submitted to *dstawick@cftc.gov.*

Comments may also be submitted by any of the following methods:

The agency's Web site, at *http://comments.cftc.gov.* Follow the instructions for submitting comments through the Web site.

Hand Delivery/Courier: Same as mail above.

Please submit your comments using only one method and identity that it is for the renewal of the Technology Advisory Committee.

All comments must be submitted in English, or if not, accompanied by an English translation. Comments will be posted as received to *www.cftc.gov.* You should submit only information that you wish to make available publicly. If you wish the Commission to consider information that you believe is exempt from disclosure under the Freedom of Information Act, a petition for confidential treatment of the exempt information may be submitted according to the procedures established in § 145.9 of the Commission's regulations.[1]

SUPPLEMENTARY INFORMATION: The Commodity Futures Trading Commission (''Commission'') has determined to renew its Technology Advisory Committee (''TAC''). The Commission has determined that renewing the advisory committee is in the public interest in connection with the duties imposed on the Commission by the Commodity Exchange Act, 7 U.S.C. 1–26, as amended. The TAC will operate for two years from the date of renewal unless, before the expiration of that time period, its charter is renewed in accordance with section 14(a)(2) of the Federal Advisory Committee Act, or the Chairman of the Commission, with the concurrence of the other Commissioners, shall direct that the advisory committee terminate on an earlier date.

The purpose of the TAC is to conduct public meetings, to submit reports and recommendations to the Commission, and to otherwise assist the Commission in identifying and understanding how new developments in technology are being applied and utilized in the industry, and their impact on the operation of the markets. The committee will allow the Commission to be an active participant in market innovation, explore the appropriate investment in technology, and advise the Commission on the need for strategies to implement rules and regulations to support the

[1] *See* 17 CFR 145.9.

Commission's mission of ensuring the integrity of the markets. Meetings of the TAC are public.

The TAC will be renewed by filing a renewal charter with the Commission; the Senate Committee on Agriculture, Nutrition and Forestry; the House Committee on Agriculture; the Library of Congress; and the General Services Administration's Committee Management Secretariat concurrently with the publication of the notice of renewal in the **Federal Register**. A copy of the renewal charter also will be posted on the Commission's Web site at *www.cftc.gov.*

Issued in Washington, DC, on June 15, 2012, by the Commission.

David A. Stawick,

Secretary of the Commission.

[FR Doc. 2012–15117 Filed 6–20–12; 8:45 am]

BILLING CODE P

CORPORATION FOR NATIONAL AND COMMUNITY SERVICE

Notice Inviting Informal Public Comment on Training and Technical Assistance and Disability Inclusion Programming

AGENCY: Corporation for National and Community Service.

ACTION: Notice Inviting Informal Public Comment on Training and Technical Assistance and Disability Inclusion Programming; correction.

SUMMARY: The Corporation for National and Community Service (CNCS) is correcting the Notice Inviting Informal Comment on Training and Technical Assistance and Disability Inclusion Programming that appeared in the **Federal Register** of June 11, 2012 (75 FR 34354). That document incorrectly listed the TDD number as (202) 606–3427.

FOR FURTHER INFORMATION CONTACT: Gina Fulbright-Powell, Corporation for National and Community Service; *tta@cns.gov;* (202) 606–7515 or TDD (800) 833–3722. Persons with visual impairments may request this notice in an alternative format.

SUPPLEMENTARY INFORMATION: Beginning on page 34354 in the **Federal Register** of Monday, June 11, 2012, make the following correction: On page 34354 in the second column, revise the TDD number (202) 606–3427 to read as follows: (800) 833–3722.

Dated: June 14, 2012.

Gretchen Van der Veer,

Director, Leadership Development and Training.

[FR Doc. 2012–15224 Filed 6–20–12; 8:45 am]

BILLING CODE 6050–$$–P

DEPARTMENT OF ENERGY

Environmental Management Site-Specific Advisory Board, Portsmouth

AGENCY: Department of Energy (DOE).

ACTION: Notice of open meeting.

SUMMARY: This notice announces a meeting of the Environmental Management Site-Specific Advisory Board (EM SSAB), Portsmouth. The Federal Advisory Committee Act (Pub. L. 92–463, 86 Stat. 770) requires that public notice of this meeting be announced in the **Federal Register**.

DATES: Thursday, July 12, 2012, 6:00 p.m.

ADDRESSES: Ohio State University, Endeavor Center, 1862 Shyville Road, Piketon, Ohio 45661.

FOR FURTHER INFORMATION CONTACT: Joel Bradburne, Deputy Designated Federal Officer, Department of Energy Portsmouth/Paducah Project Office, Post Office Box 700, Piketon, Ohio 45661, (740) 897–3822, *Joel.Bradburne@lex.doe.gov.*

SUPPLEMENTARY INFORMATION:

Purpose of the Board: The purpose of the Board is to make recommendations to DOE–EM and site management in the areas of environmental restoration, waste management and related activities.

Tentative Agenda:

- Call to Order, Introductions, Review of Agenda
- Approval of June Minutes
- Deputy Designated Federal Officer's Comments
- Federal Coordinator's Comments
- Liaisons' Comments
- Presentations
- Administrative Issues
- Subcommittee Updates
- Public Comments
- Final Comments from the Board
- Adjourn

Public Participation: The meeting is open to the public. The EM SSAB, Portsmouth, welcomes the attendance of the public at its advisory committee meetings and will make every effort to accommodate persons with physical disabilities or special needs. If you require special accommodations due to a disability, please contact Joel Bradburne at least seven days in advance of the meeting at the phone number listed above. Written statements may be filed with the Board either before or after the meeting. Individuals who wish to make oral statements pertaining to agenda items should contact Joel Bradburne at the address or telephone number listed above. Requests must be received five days prior to the meeting and reasonable provision will be made to include the presentation in the agenda. The Deputy Designated Federal Officer is empowered to conduct the meeting in a fashion that will facilitate the orderly conduct of business. Individuals wishing to make public comments will be provided a maximum of five minutes to present their comments.

Minutes: Minutes will be available by writing or calling Joel Bradburne at the address and phone number listed above. Minutes will also be available at the following Web site: *http://www.ports-ssab.energy.gov/.*

Issued at Washington, DC on June 14, 2012.

LaTanya R. Butler,

Acting Deputy Committee Management Officer.

[FR Doc. 2012–15174 Filed 6–20–12; 8:45 am]

BILLING CODE 6450–01–P

DEPARTMENT OF ENERGY

Federal Energy Regulatory Commission

Combined Notice of Filings

Take notice that the Commission has received the following Natural Gas Pipeline Rate and Refund Report filings:

Filings Instituting Proceedings

Docket Numbers: RP12–793–000.
Applicants: Antero Resources Corporation,Vanguard Permian, LLC.
Description: Joint Petition for Temporary Waiver of Antero Resources Corporation and Vanguard Permian, LLC.
Filed Date: 6/7/12.
Accession Number: 20120607–5122.
Comments Due: 5 p.m. ET 6/15/12.

Docket Numbers: RP12–794–000.
Applicants: El Paso Natural Gas Company.
Description: TGS/UNS Letter Agreement Filing to be effective 8/31/2012.
Filed Date: 6/8/12.
Accession Number: 20120608–5124.
Comments Due: 5 p.m. ET 6/20/12.

Docket Numbers: RP12–795–000.
Applicants: Williston Basin Interstate Pipeline Comp.
Description: Revised Non-conforming Service Agreements—Oneok to be effective 6/5/2012.

Filed Date: 6/8/12.
Accession Number: 20120608–5150.
Comments Due: 5 p.m. ET 6/20/12.

Any person desiring to intervene or protest in any of the above proceedings must file in accordance with Rules 211 and 214 of the Commission's Regulations (18 CFR 385.211 and 385.214) on or before 5:00 p.m. Eastern time on the specified comment date. Protests may be considered, but intervention is necessary to become a party to the proceeding.

Filings in Existing Proceedings

Docket Numbers: RP12–708–001.
Applicants: Equitrans, L.P.
Description: Withdrawal of Curtailment of Service and Operational Flow Order Filing.
Filed Date: 6/8/12.
Accession Number: 20120608–5086.
Comments Due: 5 p.m. ET 6/20/12.

Any person desiring to protest in any the above proceedings must file in accordance with Rule 211 of the Commission's Regulations (18 CFR 385.211) on or before 5:00 p.m. Eastern time on the specified comment date.

The filings are accessible in the Commission's eLibrary system by clicking on the links or querying the docket number.

eFiling is encouraged. More detailed information relating to filing requirements, interventions, protests, and service can be found at: *http://www.ferc.gov/docs-filing/efiling/filing-req.pdf.* For other information, call (866) 208–3676 (toll free). For TTY, call (202) 502–8659.

Dated: June 11, 2012.

Nathaniel J. Davis, Sr.,

Deputy Secretary.

[FR Doc. 2012–15133 Filed 6–20–12; 8:45 am]

BILLING CODE 6717–01–P

DEPARTMENT OF ENERGY

Federal Energy Regulatory Commission

Combined Notice of Filings #2

Take notice that the Commission received the following electric rate filings:

Docket Numbers: ER01–1305–019.
Applicants: Westar Generating, Inc.
Description: Westar Generating, Inc. Informational Refund Filing.
Filed Date: 6/11/12.
Accession Number: 20120611–5185.
Comments Due: 5 p.m. ET 7/2/12.

Docket Numbers: ER10–2895–003; ER11–2292–002; ER11–3942–001; ER11–2293–002; ER10–2917–003; ER11–2294–002; ER10–2918–004; ER10–2920–003; ER11–3941–001; ER10–2921–003; ER10–2922–003; ER10–3048–001; ER10–2966–003.
Applicants: Bear Swamp Power Company LLC, Brookfield Energy Marketing Inc., Brookfield Energy Marketing LP, Brookfield Energy Marketing US LLC, Brookfield Power Piney & Deep Creek LLC, Brookfield Renewable Energy Marketing US LLC, Carr Street Generating Station, L.P., Erie Boulevard Hydropower, L.P., Granite Reliable Power, LLC, Great Lakes Hydro America LLC, Hawks Nest Hydro LLC, Longview Fibre Paper and Packaging, Inc., Rumford Falls Hydro LLC.
Description: Supplement to Notice of Non-Material Change in Status of Bear Swamp Power Company LLC, et al.
Filed Date: 5/30/12.
Accession Number: 20120530–5236.
Comments Due: 5 p.m. ET 6/20/12.

Docket Numbers: ER12–1996–000.
Applicants: ISO New England Inc.
Description: Conforming Tariff Records Filing to be effective 6/1/2012.
Filed Date: 6/12/12.
Accession Number: 20120612–5044.
Comments Due: 5 p.m. ET 7/3/12.

Docket Numbers: ER12–1997–000.
Applicants: South Jersey Energy ISO1, LLC.
Description: Initial Market-Based Rate Schedule to be effective 7/1/2012.
Filed Date: 6/12/12.
Accession Number: 20120612–5078.
Comments Due: 5 p.m. ET 7/3/12.

Docket Numbers: ER12–1998–000.
Applicants: South Jersey Energy ISO2, LLC.
Description: Initial Market-Based Rate Schedule to be effective 7/1/2012.
Filed Date: 6/12/12.
Accession Number: 20120612–5081.
Comments Due: 5 p.m. ET 7/3/12.

Docket Numbers: ER12–1999–000.
Applicants: MidAmerican Energy Company.
Description: Succession Agreement—Certificate of Concurrence to be effective 2/21/2012.
Filed Date: 6/12/12.
Accession Number: 20120612–5106.
Comments Due: 5 p.m. ET 7/3/12.

Docket Numbers: ER12–2000–000.
Applicants: Big Horn Wind Project LLC.
Description: Tariff Revisions to be effective 6/13/2012.
Filed Date: 6/12/12.
Accession Number: 20120612–5111.
Comments Due: 5 p.m. ET 7/3/12.

The filings are accessible in the Commission's eLibrary system by clicking on the links or querying the docket number.

Any person desiring to intervene or protest in any of the above proceedings must file in accordance with Rules 211 and 214 of the Commission's Regulations (18 CFR 385.211 and 385.214) on or before 5:00 p.m. Eastern time on the specified comment date. Protests may be considered, but intervention is necessary to become a party to the proceeding.

eFiling is encouraged. More detailed information relating to filing requirements, interventions, protests, service, and qualifying facilities filings can be found at: *http://www.ferc.gov/docs-filing/efiling/filing-req.pdf.* For other information, call (866) 208–3676 (toll free). For TTY, call (202) 502–8659.

Dated: June 12, 2012.

Nathaniel J. Davis, Sr.,

Deputy Secretary.

[FR Doc. 2012–15134 Filed 6–20–12; 8:45 am]

BILLING CODE 6717–01–P

DEPARTMENT OF ENERGY

Federal Energy Regulatory Commission

Combined Notice of Filings #1

Take notice that the Commission received the following electric rate filings:

Docket Numbers: ER07–956–005.
Applicants: Entergy Services, Inc.
Description: Compliance Filing of Entergy Services, Inc.
Filed Date: 6/6/12.
Accession Number: 20120606–5175.
Comments Due: 5 p.m. ET 6/27/12.

Docket Numbers: ER12–1633–002.
Applicants: U.S. Energy Partners, LLC.
Description: U.S. Energy Amendment to Baseline Filing to be effective 6/6/2012.
Filed Date: 6/6/12.
Accession Number: 20120606–5134.
Comments Due: 5 p.m. ET 6/27/12.

Docket Numbers: ER12–1950–001.
Applicants: Entergy Texas, Inc.
Description: ER12–1950 ETEC Agrmt #199 Errata to be effective 8/1/2012.
Filed Date: 6/6/12.
Accession Number: 20120606–5142.
Comments Due: 5 p.m. ET 6/27/12.

Docket Numbers: ER12–1952–001.
Applicants: Entergy Texas, Inc.
Description: ER12–1952 ETEC Agrmt #200 Errata to be effective 8/1/2012.
Filed Date: 6/6/12.
Accession Number: 20120606–5143.
Comments Due: 5 p.m. ET 6/27/12.

Docket Numbers: ER12–1968–000.
Applicants: Pacific Gas and Electric Company.

Description: Unexecuted WDT SGIA for Acciona Solar Energy LLC's Lakeview Solar One Project to be effective 8/9/2012 under ER12–1968.
Filed Date: 6/6/12.
Accession Number: 20120606–5126.
Comments Due: 5 p.m. ET 6/27/12.

Docket Numbers: ER12–1969–000.
Applicants: PJM Interconnection, L.L.C.
Description: Notice of Cancellation of Service Agreement No. 2788 in Docket No. ER11–3083–000 to be effective 5/7/2012.
Filed Date: 6/6/12.
Accession Number: 20120606–5133.
Comments Due: 5 p.m. ET 6/27/12.

Docket Numbers: ER12–1970–000.
Applicants: Southwestern Public Service Company.
Description: 6–6–12_RS139–144 SPS-NM Coop Agrmts to be effective 6/1/2012.
Filed Date: 6/6/12.
Accession Number: 20120606–5147.
Comments Due: 5 p.m. ET 6/27/12.

Docket Numbers: ER12–1971–000.
Applicants: Nevada Power Company.
Description: Rate Schedule No. 129 Cost Reimbursement Letter Agreement—Valley Electric to be effective 6/5/2012.
Filed Date: 6/6/12.
Accession Number: 20120606–5149.
Comments Due: 5 p.m. ET 6/27/12.

Docket Numbers: ER12–1972–000.
Applicants: California Independent System Operator Corporation.
Description: 2012–06–06 CAISO's 7-Day Advanced Outage Reporting Amendment to be effective 8/5/2012.
Filed Date: 6/6/12.
Accession Number: 20120606–5161.
Comments Due: 5 p.m. ET 6/27/12.

Docket Numbers: ER12–1973–000.
Applicants: New England States Committee on Electricity.
Description: Informational Filing of New England States Committee on Electricity regarding its 5-year pro forma budget framework.
Filed Date: 6/1/12.
Accession Number: 20120601–5376.
Comments Due: 5 p.m. ET 6/22/12.

Take notice that the Commission received the following electric securities filings:

Docket Numbers: ES12–40–000.
Applicants: Michigan Electric Transmission Company, LLC.
Description: Michigan Electric Transmission Company, LLC Response to the Commission's Request for Reference to a Publication.
Filed Date: 6/6/12.
Accession Number: 20120606–5062.
Comments Due: 5 p.m. ET 6/18/12.

The filings are accessible in the Commission's eLibrary system by clicking on the links or querying the docket number.

Any person desiring to intervene or protest in any of the above proceedings must file in accordance with Rules 211 and 214 of the Commission's Regulations (18 CFR 385.211 and 385.214) on or before 5:00 p.m. Eastern time on the specified comment date. Protests may be considered, but intervention is necessary to become a party to the proceeding.

eFiling is encouraged. More detailed information relating to filing requirements, interventions, protests, service, and qualifying facilities filings can be found at: *http://www.ferc.gov/docs-filing/efiling/filing-req.pdf.* For other information, call (866) 208–3676 (toll free). For TTY, call (202) 502–8659.

Dated: June 7, 2012.

Nathaniel J. Davis, Sr.,

Deputy Secretary.

[FR Doc. 2012–15138 Filed 6–20–12; 8:45 am]

BILLING CODE 6717–01–P

DEPARTMENT OF ENERGY

Federal Energy Regulatory Commission

Combined Notice of Filings #1

Take notice that the Commission received the following electric rate filings:

Docket Numbers: ER10–3099–003; ER10–3300–002; ER12–1260–002; ER12–1436–003.
Applicants: La Paloma Generating Company, LLC, Stephentown Spindle, LLC, Eagle Point Power Generation LLC, RC Cape May Holdings, LLC.
Description: Notice of Change in Status of RC Cape May Holdings, LLC, et al.
Filed Date: 6/8/12.
Accession Number: 20120608–5066.
Comments Due: 5 p.m. ET 6/29/12.

Docket Numbers: ER11–4525–002; ER11–4524–001.
Applicants: Middletown Coke Company, LLC, Haverhill North Coke Company.
Description: Notice of Change in Status of Middletown Coke Company, LLC, et al.
Filed Date: 6/8/12.
Accession Number: 20120608–5082.
Comments Due: 5 p.m. ET 6/29/12.

Docket Numbers: ER12–1769–002.
Applicants: Viridian Energy NG, LLC.
Description: Market-Based Rate Tariff to be effective 7/1/2012.
Filed Date: 6/7/12.
Accession Number: 20120607–5111.
Comments Due: 5 p.m. ET 6/28/12.

Docket Numbers: ER12–1926–000.
Applicants: Independence Electricity.
Description: Amendment to Application of Independence Electricity for Market-Based Rate Authority.
Filed Date: 6/8/12.
Accession Number: 20120608–5024.
Comments Due: 5 p.m. ET 6/29/12.

Docket Numbers: ER12–1976–000.
Applicants: PJM Interconnection, L.L.C., American Electric Power Service Corporation.
Description: AEPSC submits 32nd Revised SA No. 1336 among AEPSC & Buckeye to be effective 4/17/2012.
Filed Date: 6/7/12.
Accession Number: 20120607–5123.
Comments Due: 5 p.m. ET 6/28/12.

Docket Numbers: ER12–1977–000.
Applicants: PJM Interconnection, L.L.C.
Description: Ministerial Filing to incorporate approved language effective June 1, 2012 to be effective 6/1/2012.
Filed Date: 6/8/12.
Accession Number: 20120608–5062.
Comments Due: 5 p.m. ET 6/29/12.

Docket Numbers: ER12–1978–000.
Applicants: Tampa Electric Company.
Description: Section 205 Requirements Depreciation Accrual Rates Filing to be effective 1/1/2012.
Filed Date: 6/8/12.
Accession Number: 20120608–5104.
Comments Due: 5 p.m. ET 6/29/12.

Docket Numbers: ER12–1979–000.
Applicants: PBF Power Marketing LLC.
Description: Revised Change in Status Filing to be effective 8/7/2012.
Filed Date: 6/8/12.
Accession Number: 20120608–5109.
Comments Due: 5 p.m. ET 6/29/12.

Docket Numbers: ER12–1980–000.
Applicants: Delaware City Refining Company LLC.
Description: Revised Change in Status Filing to be effective 8/7/2012.
Filed Date: 6/8/12.
Accession Number: 20120608–5110.
Comments Due: 5 p.m. ET 6/29/12.

Docket Numbers: ER12–1981–000.
Applicants: Pacific Gas and Electric Company.
Description: E&P Agreement for SunEdison's FRV Regulus Solar Interconnection Project to be effective 6/11/2012.
Filed Date: 6/8/12.
Accession Number: 20120608–5116.
Comments Due: 5 p.m. ET 6/29/12.

Docket Numbers: ER12–1982–000.
Applicants: SPS Alpaugh 50 LLC.
Description: Application for Market-Based Rate Authority to be effective 8/7/2012.

Filed Date: 6/8/12.
Accession Number: 20120608–5117.
Comments Due: 5 p.m. ET 6/29/12.

Docket Numbers: ER12–1983–000.
Applicants: Southwestern Electric Power Company.
Description: PBOP and PEB costs for formula rates of Southwestern Electric Power Company.
Filed Date: 6/8/12.
Accession Number: 20120608–5118.
Comments Due: 5 p.m. ET 6/29/12.

Docket Numbers: ER12–1984–000.
Applicants: SPS Alpaugh North LLC.
Description: Application for Market-Based Rate Authority to be effective 8/7/2012.
Filed Date: 6/8/12.
Accession Number: 20120608–5119.
Comments Due: 5 p.m. ET 6/29/12.

Docket Numbers: ER12–1985–000.
Applicants: Southwestern Electric Power Company.
Description: Accounting updates re CWIP expenditures and projection of Southwestern Electric Power Company.
Filed Date: 6/8/12.
Accession Number: 20120608–5120.
Comments Due: 5 p.m. ET 6/29/12.

The filings are accessible in the Commission's eLibrary system by clicking on the links or querying the docket number.

Any person desiring to intervene or protest in any of the above proceedings must file in accordance with Rules 211 and 214 of the Commission's Regulations (18 CFR 385.211 and 385.214) on or before 5:00 p.m. Eastern time on the specified comment date. Protests may be considered, but intervention is necessary to become a party to the proceeding.

eFiling is encouraged. More detailed information relating to filing requirements, interventions, protests, service, and qualifying facilities filings can be found at: *http://www.ferc.gov/docs-filing/efiling/filing-req.pdf.* For other information, call (866) 208–3676 (toll free). For TTY, call (202) 502–8659.

Dated: June 8, 2012.

Nathaniel J. Davis, Sr.,

Deputy Secretary.

[FR Doc. 2012–15140 Filed 6–20–12; 8:45 am]

BILLING CODE 6717–01–P

DEPARTMENT OF ENERGY

Federal Energy Regulatory Commission

Combined Notice of Filings #1

Take notice that the Commission received the following electric corporate filings:

Docket Numbers: EC12–109–000.
Applicants: ITC Midwest LLC.
Description: ITC Midwest LLC submits its application seeking authorization to acquire from Interstate Power and Light Company certain batteries, switches, related equipment and structures etc pursuant to section 203.
Filed Date: 6/11/12.
Accession Number: 20120611–5183.
Comments Due: 5 p.m. ET 7/2/12.

Take notice that the Commission received the following electric rate filings:

Docket Numbers: ER11–4657–001.
Applicants: Apple Group.
Description: Apple Group Baseline Tariff to be effective 9/28/2011.
Filed Date: 6/12/12.
Accession Number: 20120612–5024.
Comments Due: 5 p.m. ET 7/3/12.

Docket Numbers: ER12–165–004.
Applicants: Midwest Independent Transmission System Operator, Inc.
Description: G746 2nd Compliance Filing to be effective 12/21/2011.
Filed Date: 6/11/12.
Accession Number: 20120611–5146.
Comments Due: 5 p.m. ET 7/2/12.

Docket Numbers: ER12–1140–000.
Applicants: PacifiCorp.
Description: BPA CCA Refund Report to be effective N/A.
Filed Date: 6/11/12.
Accession Number: 20120611–5138.
Comments Due: 5 p.m. ET 7/2/12.

Docket Numbers: ER12–1302–000.
Applicants: Southern California Edison Company.
Description: Southern California Edison Company Response to FERC Letter Request, dated May 10, 2012.
Filed Date: 6/11/12.
Accession Number: 20120611–5173.
Comments Due: 5 p.m. ET 7/2/12.

Docket Numbers: ER12–1312–000; ER12–1305–000.
Applicants: California Independent System Operator Corporation.
Description: California Independent System Operator Corporation's Response to FERC Letter Request, dated May 10, 2012.
Filed Date: 6/11/12.
Accession Number: 20120611–5180.
Comments Due: 5 p.m. ET 7/2/12.

Docket Numbers: ER12–1378–001.
Applicants: Cleco Power LLC.
Description: Compliance Filing per Order dated May 31, 2012 (Part 1 of 2) to be effective 6/1/2012.
Filed Date: 6/12/12.
Accession Number: 20120612–5020.
Comments Due: 5 p.m. ET 7/3/12.

Docket Numbers: ER12–1379–001.
Applicants: Cleco Power LLC.
Description: Compliance Filing per Order dated May 31, 2012 (Part 2 of 2) to be effective 6/1/2012.
Filed Date: 6/12/12.
Accession Number: 20120612–5021.
Comments Due: 5 p.m. ET 7/3/12.

Docket Numbers: ER12–1991–000.
Applicants: Southern California Edison Company.
Description: Amended Radial Lines Agreement with GenOn West, LP to be effective 1/1/2012.
Filed Date: 6/12/12.
Accession Number: 20120612–5022.
Comments Due: 5 p.m. ET 7/3/12.

Docket Numbers: ER12–1992–000.
Applicants: Southern California Edison Company.
Description: Letter Agreement SCE–SCE Tehachapi Wind Energy Storage Project to be effective 5/18/2012.
Filed Date: 6/12/12.
Accession Number: 20120612–5023.
Comments Due: 5 p.m. ET 7/3/12.

Docket Numbers: ER12–1993–000.
Applicants: San Diego Gas & Electric Company.
Description: Request for Waiver of San Diego Gas & Electric Company.
Filed Date: 6/11/12.
Accession Number: 20120611–5176.
Comments Due: 5 p.m. ET 7/2/12.

Docket Numbers: ER12–1994–000.
Applicants: Exelon Corporation.
Description: Request for Waiver of Exelon Corporation.
Filed Date: 6/11/12.
Accession Number: 20120611–5177.
Comments Due: 5 p.m. ET 7/2/12.

Docket Numbers: ER12–1995–000.
Applicants: K Road Modesto Solar LLC.
Description: Application for Initial Market-Based Rate Tariff to be effective 6/13/2012.
Filed Date: 6/12/12.
Accession Number: 20120612–5034.
Comments Due: 5 p.m. ET 7/3/12.

The filings are accessible in the Commission's eLibrary system by clicking on the links or querying the docket number.

Any person desiring to intervene or protest in any of the above proceedings must file in accordance with Rules 211 and 214 of the Commission's Regulations (18 CFR § 385.211 and § 385.214) on or before 5:00 p.m. Eastern time on the specified comment date. Protests may be considered, but intervention is necessary to become a party to the proceeding.

eFiling is encouraged. More detailed information relating to filing requirements, interventions, protests, service, and qualifying facilities filings can be found at: *http://www.ferc.gov/*

docs-filing/efiling/filing-req.pdf. For other information, call (866) 208–3676 (toll free). For TTY, call (202) 502–8659.

Dated: June 12, 2012.

Nathaniel J. Davis, Sr.,

Deputy Secretary.

[FR Doc. 2012–15143 Filed 6–20–12; 8:45 am]

BILLING CODE 6717–01–P

DEPARTMENT OF ENERGY

Federal Energy Regulatory Commission

Combined Notice of Filings

Take notice that the Commission has received the following Natural Gas Pipeline Rate and Refund Report filings:

Filings Instituting Proceedings

Docket Numbers: RP12–799–000.
Applicants: Midwestern Gas Transmission Company.
Description: Non-Conforming Agreement—J Aron to be effective 11/1/2012.
Filed Date: 6/13/12.
Accession Number: 20120613–5092.
Comments Due: 5 p.m. ET 6/25/12.

Docket Numbers: RP12–800–000.
Applicants: Columbia Gas Transmission, LLC.
Description: Negotiated Rate Service Agreement—Berry Energy to be effective 6/15/2012.
Filed Date: 6/13/12.
Accession Number: 20120613–5095.
Comments Due: 5 p.m. ET 6/25/12.

Docket Numbers: RP12–801–000.
Applicants: Transcontinental Gas Pipe Line Company.
Description: GT&C Section 15 OBA Cashout Compliance (Docket No. RP11–2371) to be effective 7/15/2012.
Filed Date: 6/14/12.
Accession Number: 20120614–5045.
Comments Due: 5 p.m. ET 6/26/12.

Any person desiring to intervene or protest in any of the above proceedings must file in accordance with Rules 211 and 214 of the Commission's Regulations (18 CFR 385.211 and 385.214) on or before 5:00 p.m. Eastern time on the specified comment date. Protests may be considered, but intervention is necessary to become a party to the proceeding.

The filings are accessible in the Commission's eLibrary system by clicking on the links or querying the docket number.

eFiling is encouraged. More detailed information relating to filing requirements, interventions, protests, and service can be found at: *http://www.ferc.gov/docs-filing/efiling/filing-req.pdf.* For other information, call (866) 208–3676 (toll free). For TTY, call (202) 502–8659.

Dated: June 14, 2012.

Nathaniel J. Davis, Sr.,

Deputy Secretary.

[FR Doc. 2012–15154 Filed 6–20–12; 8:45 am]

BILLING CODE 6717–01–P

DEPARTMENT OF ENERGY

Federal Energy Regulatory Commission

Combined Notice of Filings #1

Take notice that the Commission received the following exempt wholesale generator filings:

Docket Numbers: EG12–75–000.
Applicants: OLS ENERGYAGNEWS INC.
Description: Notice of Self-Certification of Exempt Wholesale Generator Status.
Filed Date: 6/8/12.
Accession Number: 20120608–5138.
Comments Due: 5 p.m. ET 6/29/12.

Take notice that the Commission received the following electric rate filings:

Docket Numbers: ER11–3405–001; ER11–3406–001; ER11–3407–001; ER10–2897–003; ER12–1865–001.
Applicants: Krayn Wind LLC, Howard Wind LLC, Highland North LLC, EverPower Wind Holdings, Inc., Mustang Hills, LLC.
Description: Notice of Change in Status of EverPower Wind Holdings, Inc., et al.
Filed Date: 6/7/12.
Accession Number: 20120607–5127.
Comments Due: 5 p.m. ET 6/28/12.

Docket Numbers: ER12–1986–000.
Applicants: Tucson Electric Power Company.
Description: Amended and Restated Balancing Agreement with Red Mesa to be effective 8/7/2012.
Filed Date: 6/8/12.
Accession Number: 20120608–5128.
Comments Due: 5 p.m. ET 6/29/12.

Docket Numbers: ER12–1987–000.
Applicants: O.L.S. Energy-Agnews, Inc.
Description: Application for Market-Based Rate Authorization to be effective 6/9/2012.
Filed Date: 6/8/12.
Accession Number: 20120608–5135.
Comments Due: 5 p.m. ET 6/29/12.

Docket Numbers: ER12–1988–000.
Applicants: PJM Interconnection, L.L.C.
Description: Revisions to the Tariff Att Q to modify PJM's Credit Standards for Virtual Bids to be effective 8/8/2012.
Filed Date: 6/8/12.
Accession Number: 20120608–5145.
Comments Due: 5 p.m. ET 6/29/12.

Docket Numbers: ER12–1989–000.
Applicants: SunPower Corporation, Systems.
Description: SunPower Corporation, Systems MBR Filing to be effective 7/7/2012.
Filed Date: 6/8/12.
Accession Number: 20120608–5147.
Comments Due: 5 p.m. ET 6/29/12.

Take notice that the Commission received the following electric securities filings:

Docket Numbers: ES12–41–000.
Applicants: ISO New England Inc.
Description: Supplement to Application of ISO New England Inc. under Section 204 of the Federal Power Act For An Order Authorizing the Issuance of Securities.
Filed Date: 6/8/12.
Accession Number: 20120608–5065.
Comments Due: 5 p.m. ET 6/18/12.

The filings are accessible in the Commission's eLibrary system by clicking on the links or querying the docket number.

Any person desiring to intervene or protest in any of the above proceedings must file in accordance with Rules 211 and 214 of the Commission's Regulations (18 CFR 385.211 and 385.214) on or before 5:00 p.m. Eastern time on the specified comment date. Protests may be considered, but intervention is necessary to become a party to the proceeding.

eFiling is encouraged. More detailed information relating to filing requirements, interventions, protests, service, and qualifying facilities filings can be found at: *http://www.ferc.gov/docs-filing/efiling/filing-req.pdf.* For other information, call (866) 208–3676 (toll free). For TTY, call (202) 502–8659.

Dated: June 11, 2012.

Nathaniel J. Davis, Sr.,

Deputy Secretary.

[FR Doc. 2012–15141 Filed 6–20–12; 8:45 am]

BILLING CODE 6717–01–P

DEPARTMENT OF ENERGY

Federal Energy Regulatory Commission

Combined Notice of Filings

Take notice that the Commission has received the following Natural Gas Pipeline Rate and Refund Report filings:

Filings Instituting Proceedings

Docket Numbers: RP12–792–000.
Applicants: ANR Storage Company.

Description: ANR Storage Company submits tariff filing per 154.204: RP12–123 Settlement to be effective 7/1/2012.
Filed Date: 6/8/12.
Accession Number: 20120608–5022.
Comments Due: 5 p.m. ET 6/20/12.

Any person desiring to intervene or protest in any of the above proceedings must file in accordance with Rules 211 and 214 of the Commission's Regulations (18 CFR 385.211 and 385.214) on or before 5:00 p.m. Eastern time on the specified comment date. Protests may be considered, but intervention is necessary to become a party to the proceeding.

The filings are accessible in the Commission's eLibrary system by clicking on the links or querying the docket number.

eFiling is encouraged. More detailed information relating to filing requirements, interventions, protests, and service can be found at: *http://www.ferc.gov/docs-filing/efiling/filing-req.pdf.* For other information, call (866) 208–3676 (toll free). For TTY, call (202) 502–8659.

Dated: June 8, 2012.

Nathaniel J. Davis, Sr.,

Deputy Secretary.

[FR Doc. 2012–15144 Filed 6–20–12; 8:45 am]

BILLING CODE 6717–01–P

DEPARTMENT OF ENERGY

Federal Energy Regulatory Commission

Combined Notice of Filings #2

Take notice that the Commission received the following electric rate filings:

Docket Numbers: ER10–2397–001; ER10–2398–002; ER10–2399–002; ER10–2400–001; ER10–2401–001; ER10–2402–001; ER11–3414–003; ER10–2403–001; ER10–2952–003; ER10–2955–003; ER10–2405–001; ER10–2406–002; ER10–2407–001; ER10–2408–002; ER10–2409–002; ER10–2410–002; ER10–2411–003; ER10–2412–003; ER10–2414–002; ER11–2935–003; ER10–2425–001; ER10–2424–001; ER10–2426–002; ER11–2576–001; ER10–2428–001.
Applicants: Old Trail Wind Farm, LLC, Telocaset Wind Power Partners, LLC, High Prairie Wind Farm II, LLC, Cloud County Wind Farm, LLC, Pioneer Prairie Wind Farm I, LLC, Sagebrush Power Partners, LLC, Arlington Wind Power Project LLC, Marble River, LLC, Flat Rock Windpower LLC, Rail Splitter Wind Farm, LLC, Blue Canyon Windpower LLC, Wheat Field Wind Power Project LLC, Blue Canyon Windpower II, LLC, Lost Lakes Wind Farm LLC, Blue Canyon Windpower V LLC, Meadow Lake Wind Farm LLC, Meadow Lake Wind Farm II LLC, Blackstone Wind Farm LLC, Meadow Lake Wind Farm IV LLC, Meadow Lake Wind Farm III LLC, Blackstone Wind Farm II LLC, High Trail Wind Farm, LLC, Flat Rock Windpower II LLC, Paulding Wind Farm II LLC, Blue Canyon Windpower VI LLC.
Description: Notice of Non-Material Change in Status of Arlington Wind Power Project LLC, *et al.*
Filed Date: 6/11/12.
Accession Number: 20120611–5129.
Comments Due: 5 p.m. ET 7/2/12.

Docket Numbers: ER12–1990–000.
Applicants: Southern California Edison Company.
Description: Notice of Cancellation of SGIA WDAT SERV AG with FlexEnergy, LLC to be effective 3/26/2012.
Filed Date: 6/11/12.
Accession Number: 20120611–5079.
Comments Due: 5 p.m. ET 7/2/12.

Take notice that the Commission received the following qualifying facility filings:

Docket Numbers: QF12–404–000.
Applicants: Hartford Steam Company, LLC.
Description: Hartford Steam Company, LLC submits FERC Form 556 Notice of Certification of Qualifying Facility Status for a Small Power Production or Cogeneration Facility.
Filed Date: 6/8/12.
Accession Number: 20120608–5111.
Comments Due: None Applicable.

The filings are accessible in the Commission's eLibrary system by clicking on the links or querying the docket number.

Any person desiring to intervene or protest in any of the above proceedings must file in accordance with Rules 211 and 214 of the Commission's Regulations (18 CFR 385.211 and 385.214) on or before 5:00 p.m. Eastern time on the specified comment date. Protests may be considered, but intervention is necessary to become a party to the proceeding.

eFiling is encouraged. More detailed information relating to filing requirements, interventions, protests, service, and qualifying facilities filings can be found at: *http://www.ferc.gov/docs-filing/efiling/filing-req.pdf.* For other information, call (866) 208–3676 (toll free). For TTY, call (202) 502–8659.

Dated: June 11, 2012.

Nathaniel J. Davis, Sr.,

Deputy Secretary.

[FR Doc. 2012–15142 Filed 6–20–12; 8:45 am]

BILLING CODE 6717–01–P

DEPARTMENT OF ENERGY

Federal Energy Regulatory Commission

Combined Notice of Filings #2

Take notice that the Commission received the following electric rate filings:

Docket Numbers: ER10–1910–001; ER10–1911–001; ER10–1909–001; ER10–1908–001.
Applicants: Duquesne Light Company, Duquesne Power, LLC, Duquesne Keystone, LLC, Duquesne Conemaugh, LLC.
Description: Notice of Change in Status of Duquesne Light Company, *et al.*
Filed Date: 6/7/12.
Accession Number: 20120607–5086.
Comments Due: 5 p.m. ET 6/28/12.

Docket Numbers: ER10–2578–008.
Applicants: Fox Energy Company, LLC.
Description: Triennial Market Power Analysis of Fox Energy Company, LLC.
Filed Date: 6/7/12.
Accession Number: 20120607–5078.
Comments Due: 5 p.m. ET 8/6/12.

Docket Numbers: ER12–1587–001.
Applicants: Northeastern Power Company.
Description: Reactive Power Rate Schedule Compliance Filing to be effective 6/1/2012.
Filed Date: 6/7/12.
Accession Number: 20120607–5077.
Comments Due: 5 p.m. ET 6/28/12.

Docket Numbers: ER12–1880–001.
Applicants: Minco Wind III, LLC.
Description: Minco Wind III, LLC submits tariff filing per 35.17(b): Amendment to Minco Wind III, LLC MBR Application to be effective 7/30/2012.
Filed Date: 6/7/12.
Accession Number: 20120607–5109.
Comments Due: 5 p.m. ET 6/28/12.

Docket Numbers: ER12–1972–001.
Applicants: California Independent System Operator Corporation.
Description: California Independent System Operator Corporation submits tariff filing per 35.17(b): 2012–06–07 Errata to 7 Day Advance Outage Reporting Amendment to be effective 8/5/2012.
Filed Date: 6/7/12.
Accession Number: 20120607–5108.
Comments Due: 5 p.m. ET 6/28/12.

Docket Numbers: ER12–1974–000.
Applicants: Southwest Power Pool, Inc.
Description: Revisions to Protocols in Attachment H Addendum 14—Midwest Energy, Inc. to be effective 2/22/2012.

Filed Date: 6/7/12.
Accession Number: 20120607–5056.
Comments Due: 5 p.m. ET 6/28/12.

Docket Numbers: ER12–1975–000.
Applicants: Santa Maria Cogen, Inc.
Description: Cancellation of MBR Tariff—Santa Maria to be effective 6/8/2012.
Filed Date: 6/7/12.
Accession Number: 20120607–5099.
Comments Due: 5 p.m. ET 6/28/12.

The filings are accessible in the Commission's eLibrary system by clicking on the links or querying the docket number.

Any person desiring to intervene or protest in any of the above proceedings must file in accordance with Rules 211 and 214 of the Commission's Regulations (18 CFR 385.211 and 385.214) on or before 5:00 p.m. Eastern time on the specified comment date. Protests may be considered, but intervention is necessary to become a party to the proceeding.

eFiling is encouraged. More detailed information relating to filing requirements, interventions, protests, service, and qualifying facilities filings can be found at: *http://www.ferc.gov/docs-filing/efiling/filing-req.pdf.* For other information, call (866) 208–3676 (toll free). For TTY, call (202) 502–8659.

Dated: June 7, 2012.

Nathaniel J. Davis, Sr.,

Deputy Secretary.

[FR Doc. 2012–15139 Filed 6–20–12; 8:45 am]

BILLING CODE 6717–01–P

DEPARTMENT OF ENERGY

Federal Energy Regulatory Commission

Combined Notice of Filings

Take notice that the Commission has received the following Natural Gas Pipeline Rate and Refund Report filings:

Filings Instituting Proceedings

Docket Numbers: RP12–797–000.
Applicants: Panhandle Eastern Pipe Line Company, LP.
Description: Out-of-Cycle Fuel Filing to be effective 7/1/2012.
Filed Date: 6/11/12.
Accession Number: 20120611–5056.
Comments Due: 5 p.m. ET 6/25/12.

Docket Numbers: RP12–798–000.
Applicants: Dominion Transmission, Inc.
Description: DTI—June 12, 2012 Columbia Gulf Refund Report.
Filed Date: 6/12/12.
Accession Number: 20120612–5124.
Comments Due: 5 p.m. ET 6/25/12.

Any person desiring to intervene or protest in any of the above proceedings must file in accordance with Rules 211 and 214 of the Commission's Regulations (18 CFR 385.211 and 385.214) on or before 5:00 p.m. Eastern time on the specified comment date. Protests may be considered, but intervention is necessary to become a party to the proceeding.

The filings are accessible in the Commission's eLibrary system by clicking on the links or querying the docket number.

eFiling is encouraged. More detailed information relating to filing requirements, interventions, protests, and service can be found at: *http://www.ferc.gov/docs-filing/efiling/filing-req.pdf.* For other information, call (866) 208–3676 (toll free). For TTY, call (202) 502–8659.

Dated: June 13, 2012.

Nathaniel J. Davis, Sr.,

Deputy Secretary.

[FR Doc. 2012–15137 Filed 6–20–12; 8:45 am]

BILLING CODE 6717–01–P

DEPARTMENT OF ENERGY

Federal Energy Regulatory Commission

Combined Notice of Filings #2

Take notice that the Commission received the following electric rate filings:

Docket Numbers: ER10–2984–006.
Applicants: Merrill Lynch Commodities, Inc.
Description: Notice of Non-Material Change in Status of Merrill Lynch Commodities, Inc.
Filed Date: 6/13/12.
Accession Number: 20120613–5053.
Comments Due: 5 p.m. ET 7/5/12.

Docket Numbers: ER12–1270–001.
Applicants: Midwest Independent Transmission System Operator, Inc.
Description: 6–13–12 Schedule 20 Compliance to be effective 5/15/2012.
Filed Date: 6/13/12.
Accession Number: 20120613–5028.
Comments Due: 5 p.m. ET 7/5/12.

Docket Numbers: ER12–2012–000.
Applicants: Casselman Windpower LLC.
Description: Tariff Revisions to be effective 6/14/2012.
Filed Date: 6/13/12.
Accession Number: 20120613–5051.
Comments Due: 5 p.m. ET 7/5/12.

Docket Numbers: ER12–2013–000.
Applicants: Colorado Green Holdings LLC.
Description: Tariff Revisions to be effective 6/14/2012.
Filed Date: 6/13/12.
Accession Number: 20120613–5052.
Comments Due: 5 p.m. ET 7/5/12.

Docket Numbers: ER12–2014–000.
Applicants: Dillon Wind LLC.
Description: Tariff Revisions to be effective 6/14/2012.
Filed Date: 6/13/12.
Accession Number: 20120613–5054.
Comments Due: 5 p.m. ET 7/5/12.

Docket Numbers: ER12–2015–000.
Applicants: Hardscrabble Wind Power LLC.
Description: Tariff Revisions to be effective 6/14/2012.
Filed Date: 6/13/12.
Accession Number: 20120613–5055.
Comments Due: 5 p.m. ET 7/5/12.

Docket Numbers: ER12–2016–000.
Applicants: Hay Canyon Wind LLC.
Description: Tariff Revisions to be effective 6/14/2012.
Filed Date: 6/13/12.
Accession Number: 20120613–5058.
Comments Due: 5 p.m. ET 7/5/12.

Docket Numbers: ER12–2017–000.
Applicants: Juniper Canyon Wind Power LLC.
Description: Tariff Revisions to be effective 6/14/2012.
Filed Date: 6/13/12.
Accession Number: 20120613–5068.
Comments Due: 5 p.m. ET 7/5/12.

Docket Numbers: ER12–2018–000.
Applicants: Klamath Energy LLC.
Description: Tariff Revisions to be effective 6/14/2012.
Filed Date: 6/13/12.
Accession Number: 20120613–5073.
Comments Due: 5 p.m. ET 7/5/12.

The filings are accessible in the Commission's eLibrary system by clicking on the links or querying the docket number.

Any person desiring to intervene or protest in any of the above proceedings must file in accordance with Rules 211 and 214 of the Commission's Regulations (18 CFR 385.211 and 385.214) on or before 5:00 p.m. Eastern time on the specified comment date. Protests may be considered, but intervention is necessary to become a party to the proceeding.

eFiling is encouraged. More detailed information relating to filing requirements, interventions, protests, service, and qualifying facilities filings can be found at: *http://www.ferc.gov/docs-filing/efiling/filing-req.pdf.* For other information, call (866) 208–3676 (toll free). For TTY, call (202) 502–8659.

Dated: June 13, 2012.

Nathaniel J. Davis, Sr.,

Deputy Secretary.

[FR Doc. 2012–15136 Filed 6–20–12; 8:45 am]

BILLING CODE 6717–01–P

DEPARTMENT OF ENERGY

Federal Energy Regulatory Commission

Combined Notice of Filings #1

Take notice that the Commission received the following electric corporate filings:

Docket Numbers: EC12–110–000.
Applicants: California Ridge Wind Energy LLC.
Description: Application for Authorization under Section 203 of the Federal Power Act and Request for Waivers and Expedited Action of California Ridge Wind Energy LLC.
Filed Date: 6/12/12.
Accession Number: 20120612–5161.
Comments Due: 5 p.m. ET 7/3/12.

Take notice that the Commission received the following electric rate filings:

Docket Numbers: ER10–2763–002; ER10–2732–002; ER10–2733–002; ER10–2734–002; ER10–2736–002; ER10–2737–002; ER10–2741–002; ER10–2749–002; ER10–2752–002.
Applicants: Emera Energy Services Inc., Emera Energy Services Subsidiary No. 1 LLC, Emera Energy Services Subsidiary No. 2 LLC, Emera Energy Services Subsidiary No. 3 LLC, Emera Energy Services Subsidiary No. 4 LLC, Emera Energy Services Subsidiary No. 5 LLC, Emera Energy U.S. Subsidiary No. 1, Inc, Emera Energy U.S. Subsidiary No. 2, Inc., Bangor Hydro Electric Company.
Description: Change in Status Filing of Bangor Hydro Electric Company, et al.
Filed Date: 6/13/12.
Accession Number: 20120613–5023.
Comments Due: 5 p.m. ET 7/5/12.

Docket Numbers: ER12–1725–000; ER11–3859–004; ER11–3863–003; ER11–3861–003; ER11–3864–004; ER11–3866–004; ER12–192–002; ER11–3867–004; ER11–3857–004.
Applicants: ECP Energy I, LLC, Liberty Electric Power, LLC, Empire Generating Co, LLC, Dighton Power, LLC, EquiPower Resources Management, LLC, Lake Road Generating Company, L.P., MASSPOWER, Milford Power Company, LLC, Red Oak Power, LLC.
Description: Notice of Change in Status of the ECP MBR Sellers.
Filed Date: 6/5/12.
Accession Number: 20120605–5068.
Comments Due: 5 p.m. ET 6/26/12.

Docket Numbers: ER12–2001–000.
Applicants: PacifiCorp.
Description: OATT Section 46 and Attachment N to be effective 8/12/2012.
Filed Date: 6/12/12.
Accession Number: 20120612–5135.
Comments Due: 5 p.m. ET 7/3/12.

Docket Numbers: ER12–2002–000.
Applicants: PJM Interconnection, L.L.C.
Description: Queue Position T126; Original Service Agreement No. 3327 to be effective 5/11/2012.
Filed Date: 6/12/12.
Accession Number: 20120612–5144.
Comments Due: 5 p.m. ET 7/3/12.

Docket Numbers: ER12–2003–000.
Applicants: PJM Interconnection, L.L.C.
Description: Queue Position T127; Original Service Agreement No. 3328 to be effective 5/11/2012.
Filed Date: 6/12/12.
Accession Number: 20120612–5148.
Comments Due: 5 p.m. ET 7/3/12.

Docket Numbers: ER12–2004–000.
Applicants: Southern California Edison Company.
Description: GIA and Distribution Service Agmt PPD-SPVP 044-12 kV Dexus Project to be effective 6/1/2012.
Filed Date: 6/13/12.
Accession Number: 20120613–5014.
Comments Due: 5 p.m. ET 7/5/12.

Docket Numbers: ER12–2005–000.
Applicants: Michigan Electric Transmission Company.
Description: Notice of Termination of Michigan Electric Transmission Company, LLC.
Filed Date: 6/12/12.
Accession Number: 20120612–5160.
Comments Due: 5 p.m. ET 7/3/12.

Docket Numbers: ER12–2006–000.
Applicants: PJM Interconnection, L.L.C.
Description: Notice of Cancellation of Service Agreement 2950 in Docket No. ER11–3893–000 to be effective 5/11/2012.
Filed Date: 6/13/12.
Accession Number: 20120613–5038.
Comments Due: 5 p.m. ET 7/5/12.

Docket Numbers: ER12–2007–000.
Applicants: Algonquin Northern Maine Gen Co., Algonquin Tinker Gen Co., Algonquin Windsor Locks LLC, Algonquin Energy Services Inc.
Description: Notice of Change in Status to be effective 6/13/2012.
Filed Date: 6/13/12.
Accession Number: 20120613–5039.
Comments Due: 5 p.m. ET 7/5/12.

Docket Numbers: ER12–2008–000.
Applicants: Big Horn II Wind Project LLC.
Description: Tariff Revisions to be effective 6/14/2012.
Filed Date: 6/13/12.
Accession Number: 20120613–5040.
Comments Due: 5 p.m. ET 7/5/12.

Docket Numbers: ER12–2009–000.
Applicants: PJM Interconnection, L.L.C.
Description: Notice of Cancellation of Service Agreement No. 2951 in Docket No. ER11–3896–000 to be effective 5/21/2012.
Filed Date: 6/13/12.
Accession Number: 20120613–5041.
Comments Due: 5 p.m. ET 7/5/12.

Docket Numbers: ER12–2010–000.
Applicants: Fairpoint Energy, LLC.
Description: Market-Based Rate Tariff to be effective 5/21/2012.
Filed Date: 6/13/12.
Accession Number: 20120613–5042.
Comments Due: 5 p.m. ET 7/5/12.

Docket Numbers: ER12–2011–000.
Applicants: Blue Creek Wind Farm LLC.
Description: Tariff Revisions to be effective 6/14/2012.
Filed Date: 6/13/12.
Accession Number: 20120613–5047.
Comments Due: 5 p.m. ET 7/5/12.

The filings are accessible in the Commission's eLibrary system by clicking on the links or querying the docket number.

Any person desiring to intervene or protest in any of the above proceedings must file in accordance with Rules 211 and 214 of the Commission's Regulations (18 CFR 385.211 and 385.214) on or before 5:00 p.m. Eastern time on the specified comment date. Protests may be considered, but intervention is necessary to become a party to the proceeding.

eFiling is encouraged. More detailed information relating to filing requirements, interventions, protests, service, and qualifying facilities filings can be found at: *http://www.ferc.gov/docs-filing/efiling/filing-req.pdf.* For other information, call (866) 208–3676 (toll free). For TTY, call (202) 502–8659.

Dated: June 13, 2012.

Nathaniel J. Davis, Sr.,

Deputy Secretary.

[FR Doc. 2012–15135 Filed 6–20–12; 8:45 am]

BILLING CODE 6717–01–P

ENVIRONMENTAL PROTECTION AGENCY

[FRL–9691–2]

Proposed Settlement Agreement

AGENCY: Environmental Protection Agency (EPA).

ACTION: Notice of proposed settlement agreement; request for public comment.

SUMMARY: In accordance with section 113(g) of the Clean Air Act, as amended

(''Act''), notice is hereby given of a proposed settlement agreement to address a consolidated set of petitions for review filed by several parties in the United States Court of Appeals for the District of Columbia Circuit. Petitioners filed these petitions for review of an EPA rule that revised the National Emission Standards for Hazardous Air Pollutants for Reciprocating Internal Combustion Engines (the RICE NESHAP). Under the terms of the proposed settlement agreement, EPA agrees that by May 22, 2012, the Agency will sign a notice of proposed rulemaking that includes a proposal to revise the RICE NESHAP: (1) To require management practices for owners and operators of remote existing non-emergency spark-ignition 4-stroke engines above 500 horsepower located at area sources, and (2) to require owners and operators of such engines that are not located in remote areas to meet an equipment standard requiring installation of a catalyst to reduce emissions of hazardous air pollutants (HAP) and to conduct initial and annual testing. The notice for proposed rulemaking contemplated in the settlement agreement has already been signed. Further, under the agreement, if EPA signs a notice of final action no later than December 14, 2012, that promulgates in final form regulatory text that amends the RICE NESHAP and that implements substantially the same substance as set forth in Attachment A to the agreement, then Petitioners shall promptly file a stipulation of dismissal of the petitions for review.

DATES: Written comments on the proposed settlement agreement must be received by *July 23, 2012.*

ADDRESSES: Submit your comments, identified by Docket ID number EPA–HQ–OGC–2012–0460, online at *www.regulations.gov* (EPA's preferred method); by email to *oei.docket@epa.gov;* by mail to EPA Docket Center, Environmental Protection Agency, Mailcode: 2822T, 1200 Pennsylvania Ave. NW., Washington, DC 20460–0001; or by hand delivery or courier to EPA Docket Center, EPA West, Room 3334, 1301 Constitution Ave. NW., Washington, DC, between 8:30 a.m. and 4:30 p.m. Monday through Friday, excluding legal holidays. Comments on a disk or CD–ROM should be formatted in Word or ASCII file, avoiding the use of special characters and any form of encryption, and may be mailed to the mailing address above.

FOR FURTHER INFORMATION CONTACT: Michael Horowitz, Air and Radiation Law Office (2344A), Office of General Counsel, U.S. Environmental Protection Agency, 1200 Pennsylvania Ave. NW., Washington, DC 20460; telephone: (202) 564–5583; fax number (202) 564–5603; email address: *horowitz.michael@epa.gov.*

SUPPLEMENTARY INFORMATION:

I. Additional Information About the Proposed Settlement Agreement

This proposed settlement agreement would potentially resolve petitions for judicial review filed in the U.S. Court of Appeals for the District of Columbia Circuit by the following petitioners: American Petroleum Institute (Doc. No. 10–1334); the Gas Processors Association (Doc. No. 10–1335); the Interstate Natural Gas Association of America (Doc No. 10–1337); and Exterran Energy Solutions, L.P., et al., (Doc. No. 10–1338) (collectively referred to as ''Petitioners''). Petitioners seek review of a rule promulgating standards that revised the National Emission Standards for Hazardous Air Pollutants for Reciprocating Internal Combustion Engines (the RICE NESHAP), 75 FR 51570 (Aug. 20, 2010).

Petitioners filed petitions for judicial review regarding several provisions of the final rule. Under the terms of the proposed settlement agreement, EPA states that it anticipates that, by May 22, 2012, the Agency will sign a notice of proposed rulemaking that includes a proposal to revise the RICE NESHAP: (1) To require management practices for owners and operators of remote existing non-emergency spark-ignition 4-stroke engines above 500 horsepower located at area sources, and (2) to require owners and operators of such engines that are not located in a remote location to meet an equipment standard requiring installation of a catalyst to reduce emissions of HAP and to conduct initial and annual testing. The notice for proposed rulemaking contemplated in the settlement agreement has already been signed and is available on the Agency's Web site. *http://www.epa.gov/ttn/oarpg/t3/fr_notices/rice_neshap_recon_prop_052212.pdf.*

Further, under the agreement, if EPA signs a notice of final action no later than December 14, 2012, that promulgates in final form regulatory text that amends the RICE NESHAP and implements substantially the same substance as set forth in Attachment A to the agreement, then Petitioners shall promptly file a stipulation of dismissal of the petitions for review. Under the proposed settlement agreement, if EPA does not take action in accordance with the terms of the agreement, the Petitioners' sole remedy under the agreement is the right to request that the Court lift the stay of proceedings and continue with the adjudication of Petitioners' challenge of the RICE NESHAP rule. Petitioners have no further remedy under the agreement.

For a period of thirty (30) days following the date of publication of this notice, the Agency will accept written comments relating to the proposed settlement agreement from persons who were not named as parties or intervenors to the litigation in question. EPA or the Department of Justice may withdraw or withhold consent to the proposed settlement agreement if the comments disclose facts or considerations that indicate that such consent is inappropriate, improper, inadequate, or inconsistent with the requirements of the Act. Unless EPA or the Department of Justice determines, based on any comment submitted, that consent to this settlement agreement should be withdrawn, the terms of the agreement will be affirmed.

II. Additional Information About Commenting on the Proposed Settlement Agreement

A. How can I get a copy of the settlement agreement?

The official public docket for this action (identified by Docket ID No. EPA–HQ–OGC–2012–0460) contains a copy of the proposed settlement agreement. The official public docket is available for public viewing at the Office of Environmental Information (OEI) Docket in the EPA Docket Center, EPA West, Room 3334, 1301 Constitution Ave. NW., Washington, DC. The EPA Docket Center Public Reading Room is open from 8:30 a.m. to 4:30 p.m., Monday through Friday, excluding legal holidays. The telephone number for the Public Reading Room is (202) 566–1744, and the telephone number for the OEI Docket is (202) 566–1752.

An electronic version of the public docket is available through *www.regulations.gov.* You may use the *www.regulations.gov* to submit or view public comments, access the index listing of the contents of the official public docket, and to access those documents in the public docket that are available electronically. Once in the system, key in the appropriate docket identification number then select ''search''.

It is important to note that EPA's policy is that public comments, whether submitted electronically or in paper, will be made available for public viewing online at *www.regulations.gov*

without change, unless the comment contains copyrighted material, CBI, or other information whose disclosure is restricted by statute. Information claimed as CBI and other information whose disclosure is restricted by statute is not included in the official public docket or in the electronic public docket. EPA's policy is that copyrighted material, including copyrighted material contained in a public comment, will not be placed in EPA's electronic public docket but will be available only in printed, paper form in the official public docket. Although not all docket materials may be available electronically, you may still access any of the publicly available docket materials through the EPA Docket Center.

B. How and to whom do I submit comments?

You may submit comments as provided in the **ADDRESSES** section. Please ensure that your comments are submitted within the specified comment period. Comments received after the close of the comment period will be marked ''late.'' EPA is not required to consider these late comments.

If you submit an electronic comment, EPA recommends that you include your name, mailing address, and an email address or other contact information in the body of your comment and with any disk or CD ROM you submit. This ensures that you can be identified as the submitter of the comment and allows EPA to contact you in case EPA cannot read your comment due to technical difficulties or needs further information on the substance of your comment. Any identifying or contact information provided in the body of a comment will be included as part of the comment that is placed in the official public docket, and made available in EPA's electronic public docket. If EPA cannot read your comment due to technical difficulties and cannot contact you for clarification, EPA may not be able to consider your comment.

Use of the *www.regulations.gov* Web site to submit comments to EPA electronically is EPA's preferred method for receiving comments. The electronic public docket system is an ''anonymous access'' system, which means EPA will not know your identity, email address, or other contact information unless you provide it in the body of your comment. In contrast to EPA's electronic public docket, EPA's electronic mail (email) system is not an ''anonymous access'' system. If you send an email comment directly to the Docket without going through *www.regulations.gov,* your email address is automatically captured and included as part of the comment that is placed in the official public docket, and made available in EPA's electronic public docket.

Dated: June 14, 2012.

Lorie Schmidt,

Associate General Counsel.

[FR Doc. 2012–15212 Filed 6–20–12; 8:45 am]

BILLING CODE 6560–50–P

FARM CREDIT SYSTEM INSURANCE CORPORATION

Policy Statement Concerning Assistance to Troubled Farm Credit System Institutions

AGENCY: Farm Credit System Insurance Corporation.

ACTION: Policy statement; request for comments.

SUMMARY: The Farm Credit System Insurance Corporation (Corporation or FCSIC) is publishing for comment a draft Policy Statement Concerning Assistance to Troubled Farm Credit System (System) Institutions to replace the Corporation's present Policy Statement Concerning Stand-Alone Assistance. The draft revised policy statement provides additional transparency concerning the Corporation's authority to provide assistance and how the least-cost test might be performed. The draft revised policy statement also includes enhanced criteria of what is to be included in assistance proposals, and a new section discussing assistance agreements.

DATES: Written comments must be submitted on or before July 23, 2012.

ADDRESSES: Comments should be mailed or delivered to James M. Morris, General Counsel, Farm Credit System Insurance Corporation, McLean, Virginia 22102. Copies of all comments will be available for examination by interested parties in the offices of the Farm Credit System Insurance Corporation.

FOR FURTHER INFORMATION CONTACT: Wade Wynn, Senior Risk Analyst, and James M. Morris, General Counsel, Farm Credit System Insurance Corporation, 1501 Farm Credit Drive, McLean, Virginia 22102, (703) 883–4380, TDD (703) 883–4390.

SUPPLEMENTARY INFORMATION: The Corporation, in its sole discretion, is authorized under section 5.61(a) of the Farm Credit Act of 1971, as amended (Act),[1] to provide assistance to a stand-alone System institution or to facilitate a merger or consolidation of a System institution with another System institution, provided it meets the statutory least-cost test.[2] If the Corporation receives a request to assist a troubled System institution, it must compare the cost of liquidation to the cost of providing assistance to determine the least costly alternative to the Insurance Fund. If the cost of providing assistance is less than the cost of liquidation, the Corporation's Board of Directors has a basis for granting assistance to a troubled System institution. In making this determination, the Corporation is authorized under section 5.59(b) of the Act[3] to gather any information as is necessary from the troubled System institution or any such other System institution to perform the least-cost test. After gathering all pertinent information, the Corporation must: (1) Evaluate alternatives on a present-value basis, using a reasonable discount rate, (2) document the evaluation and the assumptions on which the evaluation is based, and (3) retain the documentation for not less than 5 years.

The Corporation's existing policy statement is, for the most part, a summary of the powers of the Corporation under section 5.61(a) of the Act to provide assistance to a System institution, including the timing and steps for making the least-cost test.[4] For example, the policy specifies that the Corporation's Board of Directors must determine that providing assistance is the least costly means of all possible alternatives available to the Corporation, including liquidation of the System institution, and lists the steps for conducting the statutory least-cost test. The existing policy statement also provides a list of criteria of what the Corporation expects to receive in assistance proposals to help the Corporation conduct the least-cost test.

The Corporation is now publishing for comment a revised ''Policy Statement Concerning Assistance to Troubled Farm Credit System Institutions.'' The revised policy statement provides additional transparency concerning the Corporation's authority to provide assistance and how the least-cost test might be performed. The revised policy statement also includes more detailed criteria concerning what is to be included in assistance proposals, and a new section discussing assistance agreements. The text of the ''Policy Statement Concerning Assistance to Troubled Farm Credit System

[1] 12 U.S.C. 2277a–10.

[2] *See* Act, section 5.61(a)(3), 12 U.S.C. 2277a–10(a)(3).

[3] 12 U.S.C. 2277a–8(b).

[4] 12 U.S.C. 2277a–10.

Institutions'' is set out below in its entirety:

Farm Credit System Insurance Corporation Policy Statement Concerning Assistance to Troubled Farm Credit System Institutions

Background

The Farm Credit System Insurance Corporation (Corporation), in its sole discretion, is authorized under section 5.61(a) of the Farm Credit Act of 1971, as amended (Act), 12 U.S.C. 2277a–10(a), to provide assistance, on such terms and conditions as the Corporation's Board of Directors may provide, to:

(1) A stand-alone ''troubled Farm Credit System (System) institution'' [5] in the form of loans, asset or debt security purchases, assumption of liabilities, or contributions: (a) To prevent the placing of the institution into receivership, (b) to restore the institution to normal operation, or (c) to reduce the risk to the Corporation posed by the institution when severe financial conditions threaten the stability of a significant number of other System institutions or System institutions possessing significant financial resources; or

(2) Facilitate a merger or consolidation of a ''qualifying'' [6] troubled System institution with another System institution through loans, loan guarantees, asset or debt security purchases, assumption of liabilities, contributions, or any combination thereof.[7]

If the Corporation receives a request for assistance to resolve a troubled System institution, it must compare the cost of liquidation to the cost of providing assistance to determine the least costly alternative to the Insurance Fund.[8] If the cost of providing assistance is less than the cost of liquidation, the Corporation has a basis for granting assistance to the troubled System institution. In making this determination, the Corporation is authorized to gather any information as is necessary from the troubled System institution or any such other System institution to perform the least-cost test.[9] After gathering all pertinent information, the Corporation must: (1) Evaluate alternatives on a present-value basis, using a reasonable discount rate, (2) document the evaluation and the assumptions on which the evaluation is based, and (3) retain the documentation for not less than 5 years.[10]

Policy Statement

In general, the Corporation would consider a request for assistance to a troubled System institution under section 5.61(a) of the Act, 12 U.S.C. 2277a–10(a), after other resolution alternatives have been exhausted such as voluntary assistance provided from within the System, voluntary merger with one or more System institutions, or involuntary merger with one or more System institutions as determined by the Farm Credit Administration (FCA) under section 4.12 of the Act, 12 U.S.C. 2183.

Request for Assistance

A System institution requesting assistance must submit a proposal to the Corporation.[11] If the proposal is for stand-alone assistance, the proposal must provide justification for the assistance, including a detailed analysis of how such assistance will return the troubled System institution to a financially viable, self-sustaining operation. If the proposal is to facilitate a merger, the analysis must demonstrate that the continuing System institution can safely and soundly absorb the financial and operational impact that will result from the merger. Moreover, the Corporation would also consider FCA's preliminary approval of the proposed merger, pending the least-cost determination to provide assistance.

Assistance proposals must contain information to help the Corporation compare the cost of providing assistance to the cost of liquidating the troubled System institution as part of its least-cost determination. Assistance proposals can include requests for loans, loan guarantees, loss-sharing arrangements, asset or debt security purchases, assumption of liabilities, or cash contributions. The Corporation will consider the nature of the financial assistance requested on a case-by-case basis and may alter the form or amount of assistance as part of the least-cost determination. To expedite the least-cost analysis, the Corporation has identified the following minimum criteria to be included in assistance proposals:

(1) Financial condition and performance criteria to better understand the problem that caused the need for assistance, including the rationale for seeking assistance;

(2) The type and amount of assistance needed, as well as a reasonable repayment plan. Assistance proposals must include fee arrangements with attorneys, accountants, consultants, and other parties incident to the request for assistance (or projected costs for these arrangements). Assistance proposals should not presume that the Corporation would acquire or service assets of the assisted institution without a strong justification;

(3) Reasonable projections to assess the future viability of the institution after assistance has been provided. This would include earnings projections and a capital restoration plan to achieve adequate capitalization. Earnings projections and the capital restoration plan must include the impact of repayment of assistance;

(4) A business plan that would implement written policies and procedures designed to guide operations safely and soundly and to correct the problems that caused the need for assistance. The plan must include an internal control system to monitor on-going performance with measurable criteria. The plan must also include an operating budget, including compensation arrangements covering directors and senior officers. Plans to continue the service of directors and senior officers must be pre-approved by the Corporation before assistance is

[5] A troubled System institution is one that is in danger of failing. The Act uses the terms ''insured System bank'' and ''bank'' but specifies under section 5.61(e), 12 U.S.C. 2277a–10(e), that such terms include production credit associations and other associations making direct loans under the authority provided under section 7.6 of the Act, 12 U.S.C. 2279b. For the purposes of this policy statement, the terms ''troubled System institution'' or ''troubled institution'' are used throughout to refer to any of these institutions needing assistance under section 5.61(a) of the Act, 12 U.S.C. 2277a–10(a), to avoid liquidation.

[6] ''Qualifying'' means the troubled System institution is: (1) In receivership, (2) in danger of being placed in receivership or (3) determined by the Corporation to be in need of assistance. *See* Act, section 5.61(a)(2)(B), 12 U.S.C. 2277a–10(a)(2)(B).

[7] The Corporation is not authorized to purchase voting stock from the troubled System institution. *See* Act, section 5.61(a)(3)(F), 12 U.S.C. 2277a–10(a)(3)(F).

[8] The cost of liquidation shall be made as of the earliest of: (I) The date on which a conservator is appointed for the institution, (II) the date on which a receiver is appointed for the institution, or (III) the date on which the Corporation makes any determination to provide assistance to the institution. *See* Act, section 5.61(a)(3)(C), 12 U.S.C. 2277a–10(a)(3)(C).

[9] *See* Act, sections 5.58(8) and 5.59, 12 U.S.C. 2277a–7(8) and 2277a–8. The Corporation will accord such other System institutions as the Corporation determines to be appropriate the opportunity to submit information relating to the determination. *See* Act, section 5.61(a)(3)(A), 12 U.S.C. 2277a–10(a)(3)(A).

[10] *See* Act, section 5.61(a)(3)(B), 12 U.S.C. 2277a–10(a)(3)(B). In addition, in regards to requests for stand-alone assistance, the Corporation must evaluate the adequacy of managerial resources of the troubled System institution. The Corporation is authorized to determine the continued service of any director or senior ranking officer who serves in a policymaking role for the assisted System institution as a condition of granting assistance. *See* Act, section 5.61(a)(3)(D), 12 U.S.C. 2277a–10(a)(3)(D).

[11] A request for assistance can be initiated either directly from a troubled System institution, an acquirer or acquirers interested in purchasing a troubled institution, or, if the troubled institution is an association, from its funding bank.

granted. Moreover, compensation arrangements covering directors and senior officers are subject to Corporation approval, both in granting assistance and until assistance is repaid; and

(5) Analysis of the effect of assistance on shareholders, uninsured creditors (e.g., impairment on subordinated debt), other System institutions and the financial markets. If the troubled System institution is an association, the analysis must include the impact on its funding bank's ability to continue meeting its insured obligations.

The Corporation reserves the right to request additional information as needed to conduct the least-cost test.

The Least-Cost Test

The Corporation will conduct a least-cost test to determine whether providing assistance to a troubled System institution from the Insurance Fund is less costly than liquidating the institution. In making the least-cost determination, the Corporation shall use its examination authority under section 5.59(b) of the Act, 12 U.S.C. 2277a–8(b), to collect information from the troubled System institution to calculate the cost of liquidation.[12] This information shall, at a minimum, include specific data elements as determined by Corporation staff to conduct a present-value analysis of the troubled System institution's assets, using a reasonable discount rate. As required by the Act, the troubled System institution needing assistance must provide the Corporation unrestricted on-site access to perform a due diligence review of all information related to performing a least-cost analysis.

Once the cost of liquidation has been determined, the Corporation would then compare the cost of providing assistance to the cost of liquidation to make its least-cost determination. If the troubled System institution is a bank, the Corporation would conduct a simple cost comparison to determine the least costly alternative to the Insurance Fund. However, if the troubled System institution is an association, the least-cost test becomes more complex, and the Corporation would require additional information from the funding bank to make a least-cost determination. Since only bank obligations are insured, association failures do not necessarily result in a cost to the Insurance Fund. For example, it is possible that the failure of a small or mid-sized association will have no impact on the funding bank's ability to continue meeting its insured obligations. The funds received from liquidating the small or mid-sized association's assets may cover the principal and interest of its direct note to the bank, or the bank may be able to sufficiently absorb any losses not covered by liquidation funds.[13] In such situations, assistance would not be granted to the association, because its liquidation results in zero cost to the Insurance Fund. However, in situations where a sizable association fails, or several smaller associations fail, then it is possible that such failures could seriously threaten the funding bank's ability to continue as a going concern.[14] In such situations, the Corporation's Board, in its discretion, may grant assistance, provided the financial assistance meets the least-cost test as specified in the Act.

In analyzing assistance requests for troubled System associations, the Corporation would need to consider the impact to the Insurance Fund over time. For example, the liquidation of a sizable association may not have an immediate impact on the funding bank's ability to continue meeting its insured obligations (which would mean no immediate loss to the Insurance Fund). However, such a large liquidation could create a significant disruption throughout the district. For instance, the liquidation of a considerable amount of agricultural loans in a relatively short period of time may cause a general decline in loan prices throughout the district, creating higher levels of risk in the remaining association direct notes. Moreover, because the bank loses a significant source of revenue and capital, it might not be able to increase the cost of funds to the remaining associations to make up for lost revenue while simultaneously increasing their investment requirement to remain adequately capitalized.[15] Without providing assistance to the sizable troubled association to prevent financial contagion, the bank might eventually fail, creating greater losses to the Insurance Fund.[16] A similar scenario could result with the failure of several smaller associations during a period of severe stress in agriculture. Temporary cash infusions to troubled associations could counteract the effects of financial contagion and help avoid greater losses to the bank (and in turn potential losses to the Insurance Fund) in the long term. Consequently, the Corporation would need additional information from the funding bank to assess these interdependent risks before making a least-cost determination in relation to association requests for assistance.

As required by statute, the Corporation shall use the information it receives during its least-cost analysis to evaluate the alternatives, document the evaluation and the assumptions on which the evaluation is based, and retain the documentation for not less than 5 years.

Assistance Agreements

If assistance is granted, the Corporation will enter into an agreement with the System institution receiving assistance. The terms and conditions of the agreement will be determined on a case-by-case basis and may include limits on (or prior approval of) the types or amounts of activities the institution can engage in while assistance is outstanding. For example, assistance agreements might include repayment terms and limits on concentration risk, patronage and dividend payments, executive compensation, and certain types of expenses. Assistance agreements may also provide the Corporation the right to have a representative attend the institution's board meetings. Assistance agreements will be subject to the Corporation's Board of Directors' approval. While assistance agreements are outstanding, the Corporation will use its examination authority to ensure compliance with the agreement. Moreover, the Corporation will require the System institution receiving assistance to certify and publicly disclose compliance with the agreement requirements, including the disclosure of any instances of material non-compliance with the agreement.

Dated: June 15, 2012.

Dale L. Aultman,

Secretary to the Board, Farm Credit System Insurance Corporation.

[FR Doc. 2012–15124 Filed 6–20–12; 8:45 am]

BILLING CODE 6710–01–P

[12] The Corporation will request that FCA examiners collect the information.

[13] It is also assumed that the loss of revenue would have minimal effect on the bank's ability to continue as a going concern.

[14] The failures might cause the bank to default on its insured obligations, or cause the bank to become severely undercapitalized so as to put the bank into conservatorship or receivership, which in turn, could cause the bank to seek assistance from the Corporation.

[15] These actions could weaken other associations or cause other associations in the district to fail.

[16] On the other hand, assistance might be structured in such a way that the Corporation will recoup the cost associated with providing assistance.

FEDERAL COMMUNICATIONS COMMISSION

[WC Docket Nos. 10–90 and 05–337; DA 12–868]

Data Specifications for Collecting Study Area Boundaries

AGENCY: Federal Communications Commission.

ACTION: Notice; solicitation of comments.

SUMMARY: In this document, the Wireline Competition Bureau proposes data specifications for collecting study area boundaries for purposes of implementing various reforms adopted as part of the *USF/ICC Transformation Order* and seeks comment on this proposal.

DATES: Comments are due on or before July 2, 2012. Reply comments are due on or before July 17, 2012.

ADDRESSES: Interested parties may file comments on or before July 17, 2012. All pleadings are to reference WC Docket Nos. 10–90 and 05–337. Comments may be filed using the Commission's Electronic Comment Filing System (ECFS) or by filing paper copies, by any of the following methods:

- *Electronic Filers:* Comments may be filed electronically using the Internet by accessing the ECFS: *http://fjallfoss.fcc.gov/ecfs2/.*
- *Paper Filers:* Parties who choose to file by paper must file an original and four copies of each filing. If more than one docket or rulemaking number appears in the caption of this proceeding, filers must submit two additional copies for each additional docket or rulemaking number.
- *People with Disabilities:* To request materials in accessible formats for people with disabilities (Braille, large print, electronic files, audio format), send an email to *fcc504@fcc.gov* or call the Consumer & Governmental Affairs Bureau at (202) 418–0530 (voice), (202) 418–0432 (tty).

FOR FURTHER INFORMATION CONTACT: Katie King, Wireline Competition Bureau at (202) 418–7491 or TTY (202) 418–0484. For detailed instructions for submitting comments and additional information on the rulemaking process, see the **SUPPLEMENTARY INFORMATION** section of this document.

SUPPLEMENTARY INFORMATION: This is a synopsis of the Wireline Competition Bureau's Public Notice in WC Docket Nos. 10–90, 05–337; DA 12–868, released June 1, 2012. The complete text of this document is available for inspection and copying during normal business hours in the FCC Reference Information Center, Portals II, 445 12th Street SW., Room CY–A257, Washington, DC 20554. The document may also be purchased from the Commission's duplicating contractor, Best Copy and Printing, Inc., 445 12th Street SW., Room CY–B402, Washington, DC 20554, telephone (800) 378–3160 or (202) 863–2893, facsimile (202) 863–2898, or via the Internet at *http://www.bcpiweb.com.*

I. Synopsis of Public Notice

1. In this Public Notice, the Wireline Competition Bureau (Bureau) proposes data specifications for collecting study area boundaries for purposes of implementing various reforms adopted as part of the *USF/ICC Transformation Order,* 76 FR 73830, November 29, 2011, and seeks comment on this proposal. In the *USF/ICC Transformation Order,* the Commission comprehensively reformed universal service funding for high-cost, rural areas, adopting fiscally responsible, accountable, incentive-based policies to preserve and advance voice and broadband service. As discussed below, confirming the relevant geographic boundaries is important for implementing several components of those reforms, including: the Commission's benchmarking rule; the Connect America Fund (CAF) Phase II cost model; and the elimination of support where an unsubsidized competitor offers voice and broadband service that overlaps an incumbent carrier's study area. The Bureau proposes to collect boundary data from all incumbent local exchange carriers (LECs) using the same data specifications and seeks comment on this proposal. After receiving input from the public and interested parties and approval from the Office of Management and Budget, the Bureau will issue a data request so that it will have a complete and accurate set of study area boundaries.

2. *Benchmarking Rule.* In the *USF/ICC Transformation Order,* the Commission adopted a benchmarking rule intended to moderate the expenses of rate-of-return carriers with very high costs compared to their similarly situated peers, while encouraging other rate-of-return carriers to advance broadband deployment. On April 25, 2012, the Bureau adopted the methodology for implementing this rule, which establishes limits on recovery of capital costs and operating expenses for high-cost loop support (HCLS). The methodology uses quantile regression analyses to generate a capital expense limit and an operating expense limit for each rate-of-return cost company study area. The geographic independent variables used in the regressions were rolled up to the study area using Tele Atlas wire center boundaries, which is a widely-used commercially available comprehensive source for this information. To address parties' concerns about the accuracy of this data set in the near term, the Bureau provided a streamlined, expedited waiver process for carriers affected by the benchmarks to correct any errors in their study area boundaries. The Bureau also stated it would issue a Public Notice to initiate the process of collecting study area boundaries directly from all rate-of-return carriers to correct any remaining inaccuracies. Through this Public Notice, the Bureau is now initiating that process.

3. *CAF Phase II Model.* In the *USF/ICC Transformation Order,* the Commission adopted a framework for providing ongoing support in areas served by price cap carriers using a combination of competitive bidding and a new forward-looking cost model. A model will be used to ''identify at a granular level the areas where support will be available'' and to determine the amount annual support available to each price cap carrier that accepts a ''commitment to offer voice across its service territory within a state and broadband service to supported locations within that service territory.'' Support will be awarded through a competitive bidding mechanism in territories for which price cap LECs declines to make that commitment. The model also will be used to identify areas ''that should receive funding specifically set aside for remote and extremely high-cost areas.'' Accurate service area boundaries will be necessary in order to implement these CAF II reforms.

4. *Overlap by Unsubsidized Competitors.* In the *USF/ICC Transformation Order,* the Commission adopted a rule to phase out universal service support where an unsubsidized competitor—or a combination of unsubsidized competitors—offers voice and broadband service throughout 100 percent of an incumbent's study area. In the *USF/ICC Transformation FNPRM,* 76 FR 78384, December 16, 2011, the Commission sought comment on a process to reduce support where such an unsubsidized competitor offers voice and broadband service to a substantial majority, but not 100 percent of the study area.

5. Accurate study area and exchange boundaries are important for implementing each of these reforms. As the Commission previously explained, Tele Atlas data may not represent the actual LEC footprint in all instances. In

particular, some rate-of-return carriers have argued that the Tele Atlas boundaries used in the benchmark methodology misstate the size of their study areas, and, as discussed above, the Bureau provided an expedited waiver process for carriers affected by the HCLS benchmarks to correct errors on an ad hoc basis. Relying on individual carriers to identify inaccurate boundaries in particular instances provides only an interim solution, however. Accordingly, we now seek comment on a systematic way to confirm the service territories of all incumbent LECs.

6. We propose to collect study area and exchange boundaries from all incumbent LECs and seek comment on the specifications for submitting boundary information (below) in a manner and format that Bureau staff can readily evaluate and process. These specifications are based on the template for filing study area maps that the Bureau provided for use by rate-of-return carriers seeking expedited waivers related to HCLS benchmarks. Although we permitted petitioners seeking expedited waivers of the new benchmark rule to choose to submit boundary information in other formats, we now propose requiring all incumbent LECs to submit study area maps in esri compatible shapefile format as set forth below. As the Bureau previously explained, information submitted in other formats may require additional processing that could introduce new errors and/or delay. For example, if carriers file hard-copy maps, those would need to be rectified (stretched) to have a spatial reference, and this could cause spatial errors. Moreover, Bureau staff would need to digitize such maps. On screen digitizing is done by ''tracing'' which can lead to errors in accuracy (undershoots and overshoots). In addition, digitized data needs to be post-processed by adding attribute data manually. These errors can compound. That is, errors in the original map that are magnified during rectification may lead to further digitizing errors. Finally, digitizing is labor intensive. It could take Bureau staff substantially longer to digitize hard copy maps than to process shapefiles. We seek comment on our proposal to require all incumbent LECs to submit study area maps in esri compatible shapefile format. Commenters proposing that we permit alternative formats should address the data processing issues discussed above.

7. After the Bureau receives boundaries, we propose to incorporate the data filed into one nationwide map and, in the process of doing so, identify any overlaps and voids. We propose to adopt a process to resolve any overlap issues to accurately reflect each study area's boundaries. We seek comment on comparing the submitted data to state maps where available (whether developed by the state public utility commission, state carrier association, or other sources). To the extent there are apparent conflicts in various data sources, we propose in the first instance to seek input from the relevant state public utility commission regarding the location of the relevant boundary. To the extent a state commission does not provide any input, are there other entities, such as state telecommunications associations and state geographic information systems (GIS) agencies, that could also provide valuable assistance in resolving any boundary issues? We propose to determine which void areas are populated using Census data and to determine which carrier, if any, serves these areas. We propose to publish our determinations in this regard, and provide a period of public comment for the relevant carriers to challenge any boundary decisions. We seek comment on this proposal.

8. We also seek comment on a voluntary process for state commissions to resolve overlap claims or otherwise assist carriers in their states in submitting boundaries for all carriers in the state. State commissions are likely to have access to information that could resolve conflicting boundary claims between adjoining companies. State commissions generally are the entities that establish incumbent LECs' service areas. Many state commissions and/or state telecommunications associations have published maps showing the boundaries. Some states already may have digitized maps of service territories. State involvement could substantially reduce the burden to both the industry and the Commission. If a state commission assists incumbent carriers in their state by collecting mapping data and resolving conflicts, could it certify the accuracy of the resulting boundaries to the Commission in addition to carrier certifications? If we were to establish such a voluntary process, how many states would be interested in performing this function? Should we establish a deadline by which any state commission would notify the Commission of its intention to do so, and if so, what should that deadline be? What time frame would be reasonable for states to process the requisite information and resolve any conflicts? Would it be beneficial for the state to certify to this Commission that boundaries submitted by the incumbent LECs within its jurisdiction are accurate, to supplement any certification from the individual submitting carriers? We encourage input from state commissions on these issues, and on how we could develop a workable process. To the extent parties suggest alternative mechanisms for resolving any overlap issues, to the extent reported information conflicts, they should provide a detailed explanation of how such a process would be implemented.

9. *Filing Requirements.* Pursuant to §§ 1.415 and 1.419 of the Commission's rules, 47 CFR 1.415, 1.419, interested parties may file comments and reply comments on or before the dates indicated on the first page of this document. Comments may be filed using the Commission's Electronic Comment Filing System (ECFS). *See Electronic Filing of Documents in Rulemaking Proceedings,* 63 FR 24121, May 1, 1998.

- *Electronic Filers:* Comments may be filed electronically using the Internet by accessing the ECFS: *http://fjallfoss.fcc.gov/ecfs2/.*
- *Paper Filers:* Parties who choose to file by paper must file an original and one copy of each filing. If more than one docket or rulemaking number appears in the caption of this proceeding, filers must submit two additional copies for each additional docket or rulemaking number.
- Filings can be sent by hand or messenger delivery, by commercial overnight courier, or by first-class or overnight U.S. Postal Service mail. All filings must be addressed to the Commission's Secretary, Office of the Secretary, Federal Communications Commission.
- All hand-delivered or messenger-delivered paper filings for the Commission's Secretary must be delivered to FCC Headquarters at 445 12th St., SW., Room TW–A325, Washington, DC 20554. The filing hours are 8:00 a.m. to 7:00 p.m. All hand deliveries must be held together with rubber bands or fasteners. Any envelopes and boxes must be disposed of *before* entering the building.
- Commercial overnight mail (other than U.S. Postal Service Express Mail and Priority Mail) must be sent to 9300 East Hampton Drive, Capitol Heights, MD 20743.
- U.S. Postal Service first-class, Express, and Priority mail must be addressed to 445 12th Street SW., Washington DC 20554.

People with Disabilities: To request materials in accessible formats for people with disabilities (braille, large print, electronic files, audio format),

send an email to *fcc504@fcc.gov* or call the Consumer & Governmental Affairs Bureau at 202–418–0530 (voice), 202–418–0432 (tty).

10. The proceeding this Notice initiates shall be treated as a ''permit-but-disclose'' proceeding in accordance with the Commission's *ex parte* rules. Persons making *ex parte* presentations must file a copy of any written presentation or a memorandum summarizing any oral presentation within two business days after the presentation (unless a different deadline applicable to the Sunshine period applies). Persons making oral *ex parte* presentations are reminded that memoranda summarizing the presentation must (1) list all persons attending or otherwise participating in the meeting at which the *ex parte* presentation was made, and (2) summarize all data presented and arguments made during the presentation. If the presentation consisted in whole or in part of the presentation of data or arguments already reflected in the presenter's written comments, memoranda or other filings in the proceeding, the presenter may provide citations to such data or arguments in his or her prior comments, memoranda, or other filings (specifying the relevant page and/or paragraph numbers where such data or arguments can be found) in lieu of summarizing them in the memorandum. Documents shown or given to Commission staff during *ex parte* meetings are deemed to be written *ex parte* presentations and must be filed consistent with rule § 1.1206(b). In proceedings governed by rule § 1.49(f) or for which the Commission has made available a method of electronic filing, written *ex parte* presentations and memoranda summarizing oral *ex parte* presentations, and all attachments thereto, must be filed through the electronic comment filing system available for that proceeding, and must be filed in their native format (*e.g.,* .doc, .xml, .ppt, searchable .pdf). Participants in this proceeding should familiarize themselves with the Commission's *ex parte* rules.

11. *Paperwork Reduction Act.* This Public Notice contains proposed new information collection requirements. The Commission, as part of its continuing effort to reduce paperwork burdens, invites the general public and the Office of Management and Budget (OMB) to comment on the information collection requirements contained in this document, as required by the Paperwork Reduction Act of 1995, Public Law 104–13.PRA. In addition, pursuant to the Small Business Paperwork Relief Act of 2002, we seek specific comment on how we might ''further reduce the information collection burden for small business concerns with fewer than 25 employees.''

12. *Initial Regulatory Flexibility Analysis.* As required by the Regulatory Flexibility Act of 1980, as amended (RFA), the Commission has prepared this Initial Regulatory Flexibility Analysis (IRFA) of the possible significant economic impact on a substantial number of small entities by the policies and rules proposed in this Public Notice. Written comments are requested on this IRFA. Comments must be identified as responses to the IRFA and must be filed by the deadlines for comments on the Public Notice. The Commission will send a copy of the Public Notice, including this IRFA, to the Chief Counsel for Advocacy of the Small Business Administration (SBA). In addition, the Public Notice and IRFA (or summaries thereof) will be published in the **Federal Register**.

13. *Need for, and Objectives of, the Proposed Rules.* The Public Notice proposes data specifications for collecting study area boundaries for purposes of implementing various reforms adopted as part of the *USF/ICC Transformation Order* and seeks comment on this proposal. In the *USF/ICC Transformation Order,* the Commission comprehensively reformed universal service funding for high-cost, rural areas, adopting fiscally responsible, accountable, incentive-based policies to preserve and advance voice and broadband service. As discussed in the Public Notice, confirming the relevant geographic boundaries is important for implementing several components of those reforms, including: the Commission's benchmarking rule; the Connect America Fund (CAF) Phase II cost model; and the elimination of support where an unsubsidized competitor offers voice and broadband service that overlaps an incumbent carrier's study area. Accurate study area and exchange boundaries are important for implementing each of these reforms.

14. *Legal Basis.* The legal basis for any action that may be taken pursuant to the Public Notice is contained in sections 1, 2, 4(i), 201–205, 214, 218–220, 254, 256, 303(r), and 403 of the Communications Act of 1934, as amended, 47 U.S.C. 151, 152, 154(i), 201–205, 214, 218–220, 251, 252, 254, 256, 303(r), and 403, and §§ 0.91, 0l.201(d), 0.291, 1.3 and 1.427 of the Commission's rules, 47 CFR 0.91, 0l.201(d), 0.291, 1.3 and 1.4271.

15. *Description and Estimate of the Number of Small Entities to which the Proposed Rules will Apply.* The RFA directs agencies to provide a description of, and where feasible, an estimate of the number of small entities that may be affected by the proposed rules, if adopted. The RFA generally defines the term ''small entity'' as having the same meaning as the terms ''small business,'' ''small organization,'' and ''small governmental jurisdiction.'' In addition, the term ''small business'' has the same meaning as the term ''small-business concern'' under the Small Business Act. A small-business concern'' is one which: (1) Is independently owned and operated; (2) is not dominant in its field of operation; and (3) satisfies any additional criteria established by the SBA.

16. *Small Businesses.* Nationwide, there are a total of approximately 27.5 million small businesses, according to the SBA.

17. *Wired Telecommunications Carriers.* The SBA has developed a small business size standard for Wired Telecommunications Carriers, which consists of all such companies having 1,500 or fewer employees. According to Census Bureau data for 2007, there were 3,188 firms in this category, total, that operated for the entire year. Of this total, 3,144 firms had employment of 999 or fewer employees, and 44 firms had employment of 1,000 employees or more. Thus, under this size standard, the majority of firms can be considered small.

18. *Local Exchange Carriers (LECs).* Neither the Commission nor the SBA has developed a size standard for small businesses specifically applicable to local exchange services. The closest applicable size standard under SBA rules is for Wired Telecommunications Carriers. Under that size standard, such a business is small if it has 1,500 or fewer employees. According to Commission data, 1,307 carriers reported that they were incumbent local exchange service providers. Of these 1,307 carriers, an estimated 1,006 have 1,500 or fewer employees and 301 have more than 1,500 employees. Consequently, the Commission estimates that most providers of local exchange service are small entities that may be affected by the rules and policies proposed in the Public Notice.

19. *Incumbent Local Exchange Carriers (incumbent LECs).* Neither the Commission nor the SBA has developed a size standard for small businesses specifically applicable to incumbent local exchange services. The closest applicable size standard under SBA rules is for Wired Telecommunications Carriers. Under that size standard, such a business is small if it has 1,500 or

fewer employees. According to Commission data, 1,307 carriers reported that they were incumbent local exchange service providers. Of these 1,307 carriers, an estimated 1,006 have 1,500 or fewer employees and 301 have more than 1,500 employees. Consequently, the Commission estimates that most providers of incumbent local exchange service are small businesses that may be affected by rules adopted pursuant to the Public Notice.

20. *Description of Projected Reporting, Recordkeeing, and other Compliance Requirements for Small Entities.* In the Public Notice, the Bureau proposes to collect study area and exchange boundaries from all incumbent local exchange carriers (LECs) and seeks comment on data specifications for submitting boundary information in a manner and format that Bureau staff can readily evaluate and process. Specifically, the Bureau proposes requiring all incumbent LECs to submit study area maps in esri compatible shapefile format as set forth in Appendix A of the Public Notice. This requirement would affect all incumbent LECs, including small entities, and may include new administrative processes. We seek comment on the reporting, recordkeeping and compliance requirements that may apply to all incumbent LECs, including small entities. We seek comment on any costs and burdens on small entities associated with the proposed rules including data quantifying the extent of those costs or burdens.

21. *Steps taken to Minimize the Significant Economic Impact on Small Entities, and Significant Alternatives Considered.* The RFA requires an agency to describe any significant, specifically small business, alternatives that it has considered in reaching its proposed approach, which may include the following four alternatives (among others): ''(1) The establishment of differing compliance or reporting requirements or timetables that take into account the resources available to small entities; (2) the clarification, consolidation, or simplification of compliance and reporting requirements under the rules for such small entities; (3) the use of performance rather than design standards; and (4) an exemption from coverage of the rule, or any part thereof, for such small entities.''

22. The Public Notice seeks comment from all interested parties. The Commission is aware that the proposals under consideration may impact small entities. Small entities are encouraged to bring to the Commission's attention any specific concerns they may have with the proposals outlined in the Public Notice.

23. The Commission expects to consider the economic impact on small entities, as identified in comments filed in response to the Public Notice, in reaching its final conclusions and taking action in this proceeding. The reporting, recordkeeping, and other compliance requirements in the Public Notice could have an impact on both small and large entities. The Commission believes that any impact of such requirements is outweighed by the accompanying public benefits. Further, these requirements are necessary to ensure that the statutory goals of section 254 of the Act are met without waste, fraud, or abuse.

24. In the Public Notice, the Bureau seeks comment on a voluntary process for state commissions to assist carriers in their states in submitting boundaries for all carriers in the state. State commissions generally are the entities that establish incumbent LECs' service areas. Many state commissions and/or state telecommunications associations have published maps showing the boundaries. Some states already may have digitized maps of service territories. Although data is requested from the industry generally, small carriers may be differently affected by the proposed data collection. State involvement could substantially reduce the burden to both the industry and the Commission.

25. *Federal Rules that May Duplicate, Overlap, or Conflict with the Proposed Rules.* None.

II. Specification for Study Area Boundary Submission

26. *General.* Incumbent local exchange carriers (LECs) must submit study area and wire center boundaries. Boundaries must be submitted in esri compatible shapefile format such that each shapefile represents a single study area. The shapefile must contain one data record for each exchange that constitutes the study area. Each exchange should be represented as a closed, non-overlapping polygon with the associated feature attributes described below. Submitted boundaries must be accompanied by metadata or a plain text ''readme'' file containing the information listed below.

27. Since shapefiles typically consist of 3 to 9 individual files, the shapefile for the study area should be submitted as a single, zipped file containing all the component files. The shapefile and encapsulating zip file names must contain the company name and the 6-digit study area code. Shapefile templates are available at *http://www.fcc.gov/encyclopedia/rate-return-resources.*

Note that submitted boundaries are public data and may be used in published FCC documents and Web pages.

28. *Shapefile.* A shapefile template is available at *http://www.fcc.gov/encyclopedia/rate-return-resources.* Submitted shapefiles must:

A. Contain one closed, non-overlapping polygon for each exchange in the study area that represents the area served from that exchange.

B. Have associated with each exchange polygon the following identifying feature attributes:

1. OCN—NECA-assigned operating company number as in the LERG.

2. Company Name.

3. Exchange Name.

4. Acquired Exchange subject to § 54.305 of the Commission's rules.

5. CLLI Code(s) associated with the exchange.

6. Study Area Code.

7. State.

8. FRN (please use the FRN used for the 477 filing in the state).

C. Have an assigned projection w/ accompanying .prj file.

D. Use unprojected (geographic) WGS84 geographic coordinate system.

E. Have a minimum horizontal accuracy of +/- 40 feet or less, conforming to 1:24K national mapping standards.

F. Be submitted as a WinZip archive with a name containing the company name and study area code (e.g., CompanyName_123456.zip).

29. *Cover Page Information.* In addition to the shapefile data described above, we also will collect electronically the following information:

A. Contact person name.

B. Contact person address.

C. Contact person phone number.

D. Contact person email address.

E. Date created/revised.

F. Methodology—process steps to create the data.

G. Certifying official name.

H. Certifying official address.

I. Certifying official phone number.

J. Certifying official email address.

Federal Communications Commission.

Trent B. Harkrader,

Division Chief, Telecommunications Access Policy Division, Wireline Competition Bureau.

[FR Doc. 2012–15222 Filed 6–20–12; 8:45 am]

BILLING CODE 6712–01–P

FEDERAL RESERVE SYSTEM

Change in Bank Control Notices; Acquisitions of Shares of a Bank or Bank Holding Company

The notificants listed below have applied under the Change in Bank Control Act (12 U.S.C. 1817(j)) and § 225.41 of the Board's Regulation Y (12 CFR 225.41) to acquire shares of a bank or bank holding company. The factors that are considered in acting on the notices are set forth in paragraph 7 of the Act (12 U.S.C. 1817(j)(7)).

The notices are available for immediate inspection at the Federal Reserve Bank indicated. The notices also will be available for inspection at the offices of the Board of Governors. Interested persons may express their views in writing to the Reserve Bank indicated for that notice or to the offices of the Board of Governors. Comments must be received not later than July 6, 2012.

A. Federal Reserve Bank of Atlanta (Chapelle Davis, Assistant Vice President) 1000 Peachtree Street NE., Atlanta, Georgia 30309:

1. *Moishe Gubin,* Hillside, Illinois, and Mark Orenstein, Chicago, Illinois; to acquire voting shares OptimumBank Holdings, Inc., Ft. Lauderdale, Florida, and thereby indirectly acquire voting shares of OptimumBank, Plantation, Florida.

Board of Governors of the Federal Reserve System, June 18, 2012.

Robert deV. Frierson,

Deputy Secretary of the Board.

[FR Doc. 2012–15179 Filed 6–20–12; 8:45 am]

BILLING CODE 6210–01–P

FEDERAL RESERVE SYSTEM

Formations of, Acquisitions by, and Mergers of Bank Holding Companies

The companies listed in this notice have applied to the Board for approval, pursuant to the Bank Holding Company Act of 1956 (12 U.S.C. 1841 *et seq.*) (BHC Act), Regulation Y (12 CFR part 225), and all other applicable statutes and regulations to become a bank holding company and/or to acquire the assets or the ownership of, control of, or the power to vote shares of a bank or bank holding company and all of the banks and nonbanking companies owned by the bank holding company, including the companies listed below.

The applications listed below, as well as other related filings required by the Board, are available for immediate inspection at the Federal Reserve Bank indicated. The applications will also be available for inspection at the offices of the Board of Governors. Interested persons may express their views in writing on the standards enumerated in the BHC Act (12 U.S.C. 1842(c)). If the proposal also involves the acquisition of a nonbanking company, the review also includes whether the acquisition of the nonbanking company complies with the standards in section 4 of the BHC Act (12 U.S.C. 1843). Unless otherwise noted, nonbanking activities will be conducted throughout the United States.

Unless otherwise noted, comments regarding each of these applications must be received at the Reserve Bank indicated or the offices of the Board of Governors not later than July 16, 2012.

A. Federal Reserve Bank of Cleveland (Nadine Wallman, Vice President) 1455 East Sixth Street, Cleveland, Ohio 44101–2566:

1. *CenterGroup Financial, Inc.,* Milford, Ohio; to become a bank holding company by acquiring 100 percent of the voting shares of CenterBank, Milford, Ohio.

B. Federal Reserve Bank of Dallas (E. Ann Worthy, Vice President) 2200 North Pearl Street, Dallas, Texas 75201–2272:

1. *FVNB Corp., and MOW/RPW II, Ltd.,* both in Victoria, Texas; to acquire 100 percent of the voting shares of First State Bank, New Braunfels, Texas.

Board of Governors of the Federal Reserve System, June 18, 2012.

Robert deV. Frierson,

Deputy Secretary of the Board.

[FR Doc. 2012–15177 Filed 6–20–12; 8:45 am]

BILLING CODE 6210–01–P

FEDERAL RESERVE SYSTEM

Formations of, Acquisitions by, and Mergers of Savings and Loan Holding Companies

The companies listed in this notice have applied to the Board for approval, pursuant to the Home Owners' Loan Act (12 U.S.C. 1461 *et seq.*) (HOLA), Regulation LL (12 CFR part 238), and Regulation MM (12 CFR part 239), and all other applicable statutes and regulations to become a savings and loan holding company and/or to acquire the assets or the ownership of, control of, or the power to vote shares of a savings association and nonbanking companies owned by the savings and loan holding company, including the companies listed below.

The applications listed below, as well as other related filings required by the Board, are available for immediate inspection at the Federal Reserve Bank indicated. The application also will be available for inspection at the offices of the Board of Governors. Interested persons may express their views in writing on the standards enumerated in the HOLA (12 U.S.C. 1467a(e)). If the proposal also involves the acquisition of a nonbanking company, the review also includes whether the acquisition of the nonbanking company complies with the standards in section 10(c)(4)(B) of the HOLA (12 U.S.C. 1467a(c)(4)(B)). Unless otherwise noted, nonbanking activities will be conducted throughout the United States.

Unless otherwise noted, comments regarding each of these applications must be received at the Reserve Bank indicated or the offices of the Board of Governors not later than July 16, 2012.

A. Federal Reserve Bank of Cleveland (Nadine Wallman, Vice President) 1455 East Sixth Street, Cleveland, Ohio 44101–2566:

1. *First Federal MHC, Kentucky First Federal Bancorp, both in Hazard, Kentucky; and Frankfort First Bancorp, Inc.,* Frankfort, Kentucky; to acquire CKF Bancorp, Inc., and its wholly owned subsidiary, Central Kentucky Federal Savings Bank, both in Danville, Kentucky.

B. Federal Reserve Bank of Kansas City (Dennis Denney, Assistant Vice President) 1 Memorial Drive, Kansas City, Missouri 64198–0001:

1. *Madison County Holding Company, MHC,* proposes to convert to stock form and merge with Madison County Financial Corporation, which proposes to become a savings and loan holding company by acquiring 100 percent of the voting shares of Madison County Bank, all in Madison, Nebraska.

Board of Governors of the Federal Reserve System, June 18, 2012.

Robert deV. Frierson,

Deputy Secretary of the Board.

[FR Doc. 2012–15178 Filed 6–20–12; 8:45 am]

BILLING CODE 6210–01–P

FEDERAL RETIREMENT THRIFT INVESTMENT BOARD MEETING

Sunshine Act; Notice of Meeting

TIME AND DATE: 11:00 a.m. (Eastern Time), June 25, 2012.

PLACE: 10th Floor Board Room, 77 K Street NE., Washington, DC 20002.

STATUS: Parts will be open to the public and parts closed to the public.

Matters To Be Considered

Parts Open to the Public

1. Approval of the Minutes of the May 21, 2012 Board Member Meeting.

2. Approval of the amendments to the Minutes of the April 30, 2012 Joint Board/Employee Thrift Advisory Council Meeting.

3. Thrift Savings Plan Activity Report by the Executive Director.

a. Participant Activity Report.

b. Legislative Report.

c. Monthly Investment Performance Review.

4. Budget Reports.

a. 2012 Budget Status Report.

b. 2013–2017 Strategic Budget Preview.

5. Data Breach.

6. Board Calendar Update.

Parts Closed to the Public

1. Procurement.

Contact Person for More Information

Kimberly Weaver, Director, Office of External Affairs, (202) 942–1640.

Dated: June 18, 2012.

James B. Petrick,

Secretary, Federal Retirement Thrift Investment Board.

[FR Doc. 2012–15289 Filed 6–19–12; 4:15 pm]

BILLING CODE 6760–01–P

DEPARTMENT OF HEALTH AND HUMAN SERVICES

[Document Identifier: OS–0990—New; 30-day Notice]

Agency Information Collection Request—30-Day Public Comment Request

AGENCY: Office of the Secretary, HHS.

In compliance with the requirement of section 3506(c)(2)(A) of the Paperwork Reduction Act of 1995, the Office of the Secretary (OS), Department of Health and Human Services, is publishing the following summary of a proposed information collection request for public comment. Interested persons are invited to send comments regarding this burden estimate or any other aspect of this collection of information, including any of the following subjects: (1) The necessity and utility of the proposed information collection for the proper performance of the agency's functions; (2) the accuracy of the estimated burden; (3) ways to enhance the quality, utility, and clarity of the information to be collected; and (4) the use of automated collection techniques or other forms of information technology to minimize the information collection burden.

To obtain copies of the supporting statement and any related forms for the proposed paperwork collections referenced above, email your request, including your address, phone number, OMB number, and OS document identifier, to *Naomi.Cook@hhs.gov,* or call the Reports Clearance Office on (202) 690–6162. Send written comments and recommendations for the proposed information collections within 30 days of this notice directly to the OS OMB desk Officer; faxed to OMB at 202–395–5806.

Proposed Project: New Comprehensive Communication Campaign on Right To Non-Discrimination in Certain Health and Human Service Programs—OMB No. 0990–NEW—Office for Civil Rights (OCR)

Abstract: OCR is proposing to conduct a nationwide communication campaign to educate the Latino community, particularly Limited English Proficiency (LEP) Latinos about their right to non-discrimination in certain health and human service programs which receive HHS Federal Financial Assistance. OCR requires formative and process information about various U.S. Latino communities in order to conduct the campaign effectively. The data collected will inform campaign strategies, messages, materials and outreach. OCR will oversee this one year communication campaign.

ESTIMATED ANNUALIZED BURDEN TABLE

Forms	Type of respondent	Number of respondents	Number of responses per respondent	Average burden (in hours) per response	Total burden hours
Focus Group Screening	Individual	40	1	6/60	4
Focus Group Session	Individual	20	1	2	40
Screening for Web-Based Interviews *	N/A	0	0	0	0
Web-Based interviews	Individuals	600	1	17/60	170
Total					214

* Assumes existing web panel.

Keith Tucker,

Office of the Secretary, Paperwork Reduction Act Clearance Officer.

[FR Doc. 2012–15158 Filed 6–20–12; 8:45 am]

BILLING CODE 4153–01–P

DEPARTMENT OF HEALTH AND HUMAN SERVICES

HIT Policy Committee Advisory Meeting; Notice of Meeting

AGENCY: Office of the National Coordinator for Health Information Technology, HHS.

ACTION: Notice of meeting.

This notice announces a forthcoming meeting of a public advisory committee of the Office of the National Coordinator for Health Information Technology (ONC). The meeting will be open to the public.

Name of Committee: HIT Policy Committee.

General Function of the Committee: To provide recommendations to the National Coordinator on a policy framework for the development and adoption of a nationwide health information technology infrastructure that permits the electronic exchange and use of health information as is consistent with the Federal Health IT Strategic Plan and that includes recommendations on the areas in which standards, implementation specifications, and certification criteria are needed.

Date and Time: The meeting will be held on July 10, 2012, from 10:00 a.m. to 3:00 p.m./Eastern Time.

Location: Renaissance Washington, DC DuPont Circle Hotel, 1143 New Hampshire Avenue NW., Washington, DC 20037. For up-to-date information, go to the ONC Web site, *http://healthit.hhs.gov.*

Contact Person: MacKenzie Robertson, Office of the National Coordinator, HHS, 355 E Street SW., Washington, DC 20201, 202–205–8089, Fax: 202–260–1276, email:

mackenzie.robertson@hhs.gov. Please call the contact person for up-to-date information on this meeting. A notice in the **Federal Register** about last minute modifications that impact a previously announced advisory committee meeting cannot always be published quickly enough to provide timely notice.

Agenda: The committee will hear reports from its workgroups and updates from ONC and other Federal agencies. ONC intends to make background material available to the public no later than two (2) business days prior to the meeting. If ONC is unable to post the background material on its Web site prior to the meeting, it will be made publicly available at the location of the advisory committee meeting, and the background material will be posted on ONC's Web site after the meeting, at *http://healthit.hhs.gov.*

Procedure: ONC is committed to the orderly conduct of its advisory committee meetings. Interested persons may present data, information, or views, orally or in writing, on issues pending before the Committee. Written submissions may be made to the contact person on or before two days prior to the Committee's meeting date. Oral comments from the public will be scheduled in the agenda. Time allotted for each presentation will be limited to three minutes. If the number of speakers requesting to comment is greater than can be reasonably accommodated during the scheduled public comment period, ONC will take written comments after the meeting until close of business on that day.

Persons attending ONC's advisory committee meetings are advised that the agency is not responsible for providing access to electrical outlets.

ONC welcomes the attendance of the public at its advisory committee meetings. Seating is limited at the location, and ONC will make every effort to accommodate persons with physical disabilities or special needs. If you require special accommodations due to a disability, please contact MacKenzie Robertson at least seven (7) days in advance of the meeting.

Notice of this meeting is given under the Federal Advisory Committee Act (Pub. L. 92–463, 5 U.S.C., App. 2).

Dated: June 13, 2012.

MacKenzie Robertson,

FACA Program Lead, Office of Policy and Planning, Office of the National Coordinator for Health Information Technology.

[FR Doc. 2012–15096 Filed 6–20–12; 8:45 am]

BILLING CODE 4150–45–P

DEPARTMENT OF HEALTH AND HUMAN SERVICES

Secretary's Advisory Committee on Human Research Protections

AGENCY: Office of the Assistant Secretary for Health, Office of the Secretary, Department of Health and Human Services.

ACTION: Notice.

SUMMARY: Pursuant to Section 10(a) of the Federal Advisory Committee Act, U.S.C. Appendix 2, notice is hereby given that the Secretary's Advisory Committee on Human Research Protections (SACHRP) will hold its twenty-eighth meeting. The meeting will be open to the public. Information about SACHRP and the meeting agenda will be posted on the SACHRP Web site at: *http://www.dhhs.gov/ohrp/sachrp/mtgings/index.html.*

DATES: The meeting will be held on Tuesday, July 10, 2012 from 8:30 a.m. until 5:00 p.m. and Wednesday, July 11, 2012 from 8:30 a.m. until 4:30 p.m.

ADDRESSES: U.S. Department of Health & Human Services, 200 Independence Avenue SW., Hubert H. Humphrey Building, Room 705A, Washington, DC 20201.

FOR FURTHER INFORMATION CONTACT: Jerry Menikoff, M.D., J.D., Director, Office for Human Research Protections (OHRP), or Julia Gorey, J.D., Executive Director, SACHRP; U.S. Department of Health and Human Services, 1101 Wootton Parkway, Suite 200, Rockville, Maryland 20852; 240–453–8141; fax: 240–453–6909; email address: *Julia.Gorey@hhs.gov.*

SUPPLEMENTARY INFORMATION: Under the authority of 42 U.S.C. 217a, Section 222 of the Public Health Service Act, as amended, SACHRP was established to provide expert advice and recommendations to the Secretary of Health and Human Services and the Assistant Secretary for Health on issues and topics pertaining to or associated with the protection of human research subjects.

The meeting will open Tuesday, July 10, with remarks from SACHRP Chair Dr. Barbara Bierer and OHRP Director Dr. Jerry Menikoff, followed by a report from the Subpart A Subcommittee (SAS). SAS will discuss their recent work, including considerations for investigator responsibilities and informed consent waiver criteria. SAS is charged with developing recommendations for consideration by SACHRP regarding the application of subpart A of 45 CFR part 46 in the current research environment; this subcommittee was established by SACHRP in October 2006. The topic for discussion Tuesday afternoon will be the Internet in human subjects research, with a series of FAQs drafted by Dr. Elizabeth Buchanan and Dean Gallant presented for consideration.

On the morning of July 11, SACHRP and representatives from OHRP will discuss the requirements surrounding local context in human subjects research, and considerations for new HHS guidance. This discussion will help inform the report and recommendations to follow from the Subcommittee on Harmonization (SOH). SOH was established by SACHRP at its July 2009 meeting, and is charged with identifying and prioritizing areas in which regulations and/or guidelines for human subjects research adopted by various agencies or offices within HHS would benefit from harmonization, consistency, clarity, simplification and/or coordination. Wednesday afternoon, SACHRP member Drs. Lainie Friedman-Ross and Daniel Hausman will discuss IRB issues concerning community engagement in research.

Public comment will be heard on both days. Members of the public will have the opportunity to provide comments on both days of the meeting. Public comment will be limited to five minutes per speaker.

Public attendance at the meeting is limited to space available. Individuals who plan to attend the meeting and need special assistance, such as sign language interpretation or other reasonable accommodations, should notify the designated contact persons. Any members of the public who wish to have printed materials distributed to SACHRP members for this scheduled meeting should submit materials to the Executive Director, SACHRP, prior to the close of business July 3, 2012.

Dated: June 15, 2012.

Jerry Menikoff,

Director, Office for Human Research Protections, Executive Secretary, Secretary's Advisory Committee on Human Research Protections.

[FR Doc. 2012–15080 Filed 6–20–12; 8:45 am]

BILLING CODE 4150–36–P

DEPARTMENT OF HEALTH AND HUMAN SERVICES

HIT Standards Committee Advisory Meeting; Notice of Meeting

AGENCY: Office of the National Coordinator for Health Information Technology, HHS.

ACTION: Notice of meeting.

This notice announces a forthcoming meeting of a public advisory committee of the Office of the National Coordinator for Health Information Technology (ONC). The meeting will be open to the public.

Name of Committee: HIT Standards Committee.

General Function of the Committee: To provide recommendations to the National Coordinator on standards, implementation specifications, and certification criteria for the electronic exchange and use of health information for purposes of adoption, consistent with the implementation of the Federal Health IT Strategic Plan, and in accordance with policies developed by the HIT Policy Committee.

Date and Time: The meeting will be held on July 19, 2012, from 9:00 a.m. to 3:00 p.m. Eastern Time.

Location: Omni Shoreham Hotel, 2500 Calvert Street, NW., Washington DC 20008. For up-to-date information, go to the ONC Web site, *http://healthit.hhs.gov.*

Contact Person: MacKenzie Robertson, Office of the National Coordinator, HHS, 355 E Street SW., Washington, DC 20201, 202–205–8089, Fax: 202–260–1276, email: *mackenzie.robertson@hhs.gov.* Please call the contact person for up-to-date information on this meeting. A notice in the **Federal Register** about last minute modifications that impact a previously announced advisory committee meeting cannot always be published quickly enough to provide timely notice.

Agenda: The committee will hear reports from its workgroups and updates from ONC and other Federal agencies. ONC intends to make background material available to the public no later than two (2) business days prior to the meeting. If ONC is unable to post the background material on its Web site prior to the meeting, it will be made publicly available at the location of the advisory committee meeting, and the background material will be posted on ONC's Web site after the meeting, at *http://healthit.hhs.gov.*

Procedure: ONC is committed to the orderly conduct of its advisory committee meetings. Interested persons may present data, information, or views, orally or in writing, on issues pending before the Committee. Written submissions may be made to the contact person on or before two days prior to the Committee's meeting date. Oral comments from the public will be scheduled in the agenda. Time allotted for each presentation will be limited to three minutes. If the number of speakers requesting to comment is greater than can be reasonably accommodated during the scheduled public comment period, ONC will take written comments after the meeting until close of business on that day.

Persons attending ONC's advisory committee meetings are advised that the agency is not responsible for providing access to electrical outlets.

ONC welcomes the attendance of the public at its advisory committee meetings. Seating is limited at the location, and ONC will make every effort to accommodate persons with physical disabilities or special needs. If you require special accommodations due to a disability, please contact MacKenzie Robertson at least seven (7) days in advance of the meeting.

Notice of this meeting is given under the Federal Advisory Committee Act (Pub. L. 92–463, 5 U.S.C., App. 2).

Dated: June 13, 2012.

MacKenzie Robertson,

FACA Program Lead, Office of Policy and Planning, Office of the National Coordinator for Health Information Technology.

[FR Doc. 2012–15098 Filed 6–20–12; 8:45 am]

BILLING CODE 4150–45–P

DEPARTMENT OF HEALTH AND HUMAN SERVICES

[CMS–9963–NC]

Request for Domains, Instruments, and Measures for Development of a Standardized Instrument for Use in Public Reporting of Enrollee Satisfaction With Their Qualified Health Plan and Exchange

AGENCY: Centers for Medicare & Medicaid Services (CMS), HHS.

ACTION: Notice.

SUMMARY: The Patient Protection and Affordable Care Act (the Affordable Care Act) requires the Department of Health and Human Services (HHS) to establish an enrollee satisfaction survey system to be administered to members of each qualified health plan offered through an Exchange. This notice solicits input on publicly-available domains (for example, broad functional areas such as access, communication, coordination of care, customer service), instruments, and measures for measuring the level of enrollee satisfaction with qualified health plans plus the experience of the consumer interacting with the health care system and the experience of the consumer interacting with the Exchange (for example, enrollment and customer service) from consumers, researchers, vendors, health plans, Exchanges, stakeholders, and other interested parties.

DATES: Input is sought by June 29, 2012.

ADDRESSES: Electronic submissions are encouraged, preferably as an email with an electronic file in a standard word processing format as an email attachment. Submissions may also be in the form of a letter to: Kathleen Jack, Center for Consumer Information and Insurance Oversight, Centers for Medicare & Medicaid Services, 7500 Security Blvd., Mailstop: C5–17–16, Windsor Mill, MD 21244, Phone: (410) 786–7214, Email: *Kathleen.Jack@cms.hhs.gov.*

FOR FURTHER INFORMATION CONTACT: Kathleen Jack, 410–786–7214.

SUPPLEMENTARY INFORMATION:

I. Background

On March 23, 2010, the President signed into law the Patient Protection and Affordable Care Act (Pub. L. 111–148). On March 30, 2010, the Health Care and Education Reconciliation Act of 2010 (Pub. L. 111–152) was signed into law. The two laws are collectively referred to as the Affordable Care Act. The Affordable Care Act creates new competitive private health insurance marketplaces, Affordable Insurance Exchanges (Exchanges), that will give millions of Americans and small businesses access to quality, affordable coverage.

Section 1311(c)(4) of the Affordable Care Act directs HHS to establish an enrollee satisfaction survey system to be administered to members of each qualified health plan (QHP) offered through an Exchange. In addition, 45 CFR 156.200(b)(5) (77 FR 18310, at 18469 (Mar. 27, 2012)) requires implementation of the enrollee satisfaction survey as part of QHP certification requirements. Consistent with our intent that QHP-specific quality ratings would be available in 2016 open enrollment for the 2017 coverage year, HHS intends to propose that the enrollee satisfaction survey be implemented in 2016 and available for display on the Internet portal for every Exchange in 2016 open enrollment for the 2017 coverage year. This call for domains, instruments, and measures is occurring now because of the multi-phased survey development and testing process necessary before full implementation.

II. Consumer Survey

The Centers for Medicare & Medicaid Services (CMS) is soliciting the submission of publicly-available domains,[1] instruments and measures for

[1] The Agency for Healthcare Research and Quality (AHRQ) defines domains for the purposes of the

Continued

capturing the experience of the consumer with a QHP offered through an Exchange. HHS is considering how the scope of the enrollee satisfaction survey may also include the experience of the consumer interacting with the health care system as well as the experience of the consumer interacting with the Exchange (for example, enrollment and customer service). CMS is soliciting the submission of publicly-available domains, instruments and measures for assessing this experience as well. On both issues, CMS is interested in instruments and items which can measure quality of care from the consumer's perspective and track changes over time.

The target population for the enrollee satisfaction survey is the Exchange enrollees (i.e., individuals enrolled in QHPs). Exchange enrollees may differ from the populations who are currently commercially-insured in their experience with health coverage and the health care system, health literacy, and knowledge of quality care. CMS is looking for items for which (1) the people who received care are the best or only judge and (2) consumers and patients identified the information as important to them; for example, enrollees can best acknowledge if the QHP/Exchange met their information needs or explained things in ways they can understand. Existing instruments that have been tested should have a high degree of reliability and validity; evidence of wide use will be helpful.

Section 1311(c)(4) of the of the Affordable Care Act directs that the enrollee satisfaction survey will ''evaluate the level of enrollee satisfaction with qualified health plans offered through an Exchange, for each qualified health plan that had more than 500 enrollees in the previous year.'' CMS is developing this survey system and intends to submit it to the Agency for Healthcare Research and Quality (AHRQ) for recognition as a Consumer Assessment of Healthcare Providers and Systems (CAHPS®) survey. CAHPS® is a registered trademark of AHRQ. The survey will be developed in accordance with CAHPS® Survey Design Principles and implementation instructions will be based on those for CAHPS® instruments (*https://www.cahps.AHRQ.gov/About-CAHPS/Principles.aspx*). Using the CAHPS® mark is advantageous because it assures consumers and stakeholders that the survey data submitted meet the original validity and reliability standards reported by the CAHPS® program and are comparable to data from other competing organizations. We intend for the enrollee satisfaction survey to be a trademarked CAHPS® survey to ensure efficacy of the enrollee satisfaction survey and to ultimately reduce issuer burden by streamlining potential Exchange and State reporting requirements. All CAHPS® surveys are available to users free of charge and are published on the CMS or AHRQ Web sites.

Consumer Assessment of Healthcare Providers and Systems (CAHPS) survey as ''broad functional areas.'' See *https://www.cahps.ahrq.gov/About-CAHPS/Glossary.aspx* (last accessed May 18, 2012).

III. Submission Guidelines

When submitting domains, include, to the extent available:

- Detailed descriptions of question domain and specific purpose.
- Sample questions, in all available languages.
- Relevant peer-reviewed journal articles or full citations.

When submitting instruments, submitter shall include, to the extent available:

- Name of the instrument.
- Copies of the full instrument in all available languages.
- Domains included in the instrument.
- Measures derived from the instrument.
- Instrument reliability (internal consistency, test-retest, etc) and validity (content, construct, criterion-related).
- Results of cognitive testing.
- Results of field testing.
- Current use of the instrument (who is using it, what it is being used for, what population it is being used with, how instrument findings are reported, and by whom the findings are used).
- Relevant peer-reviewed journal articles or full citations.
- CAHPS® trademark status.
- Survey administration instructions.
- Data analysis instructions.
- Guidelines for reporting survey data.

When submitting measures, submitter shall include, to the extent available:

- Measure characteristics.
- Importance of the measure.
- Populations addressed by the measure.
- Measure reliability (internal consistency, test-retest, etc.) and validity (content, construct, criterion-related).
- Results of cognitive testing.
- Results of field testing.
- Current use of the measure (who is using it, what it is being used for, how measure finding are reported, and by whom the findings are used).
- Status of the National Quality Forum (NQF) endorsement and NQF number.

All submissions include:

- A brief cover letter summarizing the information requested above for submitted instruments and domains, respectively and how the submission will help fulfill the intent of the enrollee satisfaction survey;
- (Optional) Complete information about the person submitting the material for the purposes of follow up questions about the submission, including:
  - ++ Name
  - ++ Title
  - ++ Organization
  - ++ Mailing address
  - ++ Telephone number
  - ++ Email address
- Indication that the domain, instrument or measure is publicly-available.

Dated: May 15, 2012.

Marilyn Tavenner,

Acting Administrator, Centers for Medicare & Medicaid Services.

Approved: June 14, 2012.

Kathleen Sebelius,

Secretary.

[FR Doc. 2012–15162 Filed 6–18–12; 11:15 am]

BILLING CODE 4120–01–P

DEPARTMENT OF HEALTH AND HUMAN SERVICES

Centers for Disease Control and Prevention

Board of Scientific Counselors, Office of Public Health Preparedness and Response; Meeting

In accordance with section 10 (a) (2) of the Federal Advisory Committee Act (Pub. L. 92–463), the Centers for Disease Control and Prevention (CDC), announces the following meeting of the aforementioned committee:

Time and Date: 3:00 p.m.–4:00 p.m., July 10, 2012.

Place: This meeting is accessible by teleconference only. Please contact CDC (see Contact for More Information) to obtain further instructions on how to participate.

Status: Participation by teleconference is limited by the number of open ports available.

Purpose: The Board of Scientific Counselors (BSC) is charged with providing advice and guidance to the Secretary, Department of Health and Human Services (HHS), the Assistant Secretary for Health (ASH), the Director, Centers for Disease Control and Prevention (CDC), and the Director, Office of Public Health Preparedness and Response (OPHPR), concerning strategies and goals for the programs and research within OPHPR, monitoring the overall strategic direction and focus of the OPHPR Divisions and Offices, and administration and oversight of peer review of OPHPR scientific programs. For

additional information about the Board, please visit: *http://www.cdc.gov/phpr/science/counselors.htm.*

Matters to be Discussed: The agenda item for this meeting: a motion and vote to establish a joint working group with the National Biodefense Science Board, Federal Advisory Committee to the Assistant Secretary for Preparedness and Response, U.S. Department of Health and Human Services. This joint BSC–NBSB working group will be charged with conducting a review of CDC's Division of Strategic National Stockpile. Membership of the joint working group will also be discussed.

Additional Information for Public Participants: Members of the public that wish to attend this meeting should pre-register by submitting the following information by email, facsimile, or phone (see Contact Person for More Information) no later than 12:00 noon (EDT) on Tuesday, July 3, 2012:

- Full Name,
- Organizational Affiliation,
- Complete Mailing Address,
- Citizenship, and
- Phone Number or Email Address

Contact Person for More Information: Marquita Black, OPHPR, Administrative Assistant, Centers for Disease Control and Prevention, 1600 Clifton Road NE., Mailstop D–44, Atlanta, Georgia 30333, Telephone: (404) 639–7325; Facsimile: (404) 639–7977; Email: *OPHPR.BSC.Questions@cdc.gov.*

The Director, Management Analysis and Services Office, has been delegated the authority to sign **Federal Register** notices pertaining to announcements of meetings and other committee management activities for both the Centers for Disease Control and Prevention and the Agency for Toxic Substances and Disease Registry.

Dated: June 14, 2012.

Elaine L. Baker,

Director, Management Analysis and Services Office, Centers for Disease Control and Prevention.

[FR Doc. 2012–15185 Filed 6–20–12; 8:45 am]

BILLING CODE 4163–18–P

DEPARTMENT OF HEALTH AND HUMAN SERVICES

Administration for Children and Families

Submission for OMB Review; Comment Request

Title: Personal Responsibility Education Program (PREP) Multi-Component Evaluation—Performance Measure and Baseline Data Collection.

OMB No.: 0970–0398.

Description: The Family and Youth Services Bureau (FYSB) and the Office of Planning, Research, and Evaluation (OPRE), Administration for Children and Families (ACF), U.S. Department of Health and Human Services (HHS), are proposing data collection activity as part of the PREP Multi-Component Evaluation. The goals of the PREP Multi-Component Evaluation are to document how PREP programs are operationalized in the field, collect performance measure data for PREP programs, and assess the effectiveness of selected PREP-funded programs. The PREP Multi-Component Evaluation will make a significant contribution to the teen pregnancy prevention literature and will produce useful findings for state and federal policymakers, researchers, and program administrators.

The evaluation will include three primary, interconnected components or ''studies'':

1. The Impact and In-depth Implementation Study (IS);
2. The Design and Implementation Study (DIS); and
3. The Performance Analysis Study (PAS).

Description on all three studies was provided in a 60-Day **Federal Register** Notice posted in Vol. 76, No. 239, p. 77538 on December 13, 2011.

This 30 Day Notice covers (a) the baseline instrument for the Impact and In-depth Implementation Study; (b) all instruments for the Performance Analysis Study; and (c) a request for OMB to waive subsequent 60-day **Federal Register** notices pertaining to the PREP Multi-Component Evaluation.

Impact and In-depth Implementation Study Respondents: Respondents to the baseline survey will be participants in PREP-funded programs, including students and other youth.

Performance Analysis Study Respondents: Performance measurement data collection instruments will be administered to individuals representing states (i.e. PREP state-level coordinators), as well as sub-awardees (i.e program directors), program facilitators, other program staff, and program participants.

Annual Burden Estimates

The following table provides burden estimates for the previously-approved information collection requests, as well as the currently requested information collection requests. Burden for all components have been annualized over three years for this request.

Data collection instrument	Type of respondent	Annual number of respondents	Number of responses per respondent	Average burden hours per response	Total burden hours
Collection of Field Data (Approved November 6, 2011)					
Discussion Guide for use with Macro-Level Coordinators.	Macro-Level Coordinators	10	1	1	10
Discussion Guide for use with Program Directors.	Program Directors	20	2	2	80
Discussion Guide for use with Program Staff.	Program Staff	40	1	2	80
Discussion Guide for use with School Administrators.	School Administrators	70	1	1	70
Design Survey Data Collection (Approved March 7, 2012)					
Design Survey: Discussion Guide for Use with PREP State-Level Coordinators and State-Level Staff.	State-Level Coordinators and State-Level Staff.	30	1	1	30
Performance Measures and Baseline Data (Currently Requested)					
Instrument 1: Participant entry survey.	Participant	90,250	1	0.08333	7521
Instrument 2: Participant exit survey	Participant	2,200	1	0.16667	12,034

Data collection instrument	Type of respondent	Annual number of respondents	Number of responses per respondent	Average burden hours per response	Total burden hours
Instrument 3: Baseline Survey	Participant	1,900	1	0.75	1,425
Instrument 4: Performance Reporting System Data Entry Form.	Grantee Administrator	65	1	24	1,560
Instrument 5: Sub-Awardee data collection and reporting.	Sub-Awardee Administrator	475	1	24.16667	11,479
Instrument 6: Implementation site data collection.	Site Facilitator	950	1	16	15,200

Estimated Total Annual Burden Hours: 49,489.

Additional Information

Copies of the proposed collection can be obtained and comments may be forwarded by writing to the Administration for Children and Families, Office of Planning, Research and Evaluation, 370 L'Enfant Promenade SW., Washington, DC 20447, Attn: OPRE Reports Clearance Officer. Email address: *OPREinfocollection@acf.hhs.gov.* All requests should be identified by the title of the information collection.

OMB Comment

OMB is required to make a decision concerning the collection of information between 30 and 60 days after publication of this document in the **Federal Register**. Therefore, a comment is best assured of having its full effect if OMB receives it within 30 days of publication. Written comments and recommendations for the proposed information collection should be sent directly to the following: Office of Management and Budget, Paperwork Reduction Project, Email: *OIRA_SUBMISSION@OMB.EOP.GOV*, Attn: Desk Officer for the Administration, for Children and Families.

Steven M. Hanmer,

OPRE Reports Clearance Officer, Administration for Children and Families.

[FR Doc. 2012–15010 Filed 6–20–12; 8:45 am]

BILLING CODE 4184–37–M

DEPARTMENT OF HEALTH AND HUMAN SERVICES

Administration for Children and Families

Proposed Information Collection Activity; Comment Request

Proposed Projects

Title: April 2014 Current Population Survey Supplement on Child Support.

OMB No.: 0992–0003.

Description: Collection of these data will assist legislators and policymakers in determining how effective their policymaking efforts have been over time in applying the various child support legislation to the overall child support enforcement picture. This information will help policymakers determine to what extent individuals on welfare would be removed from the welfare rolls as a result of more stringent child support enforcement efforts.

Respondents: Individuals and households.

ANNUAL BURDEN ESTIMATES

Instrument	Number of respondents	Number of responses per respondent	Average burden hours per response	Total Burden hours
Child Support Survey	41,300	1	0.03	1,239

Estimated Total Annual Burden Hours: 1,239.

In compliance with the requirements of Section 506(c)(2)(A) of the Paperwork Reduction Act of 1995, the Administration for Children and Families is soliciting public comment on the specific aspects of the information collection described above. Copies of the proposed collection of information can be obtained and comments may be forwarded by writing to the Administration for Children and Families, Office of Planning, Research and Evaluation, 370 L'Enfant Promenade SW., Washington, DC 20447, Attn: ACF Reports Clearance Officer. Email address: *infocollection@acf.hhs.gov.* All requests should be identified by the title of the information collection.

The Department specifically requests comments on: (a) Whether the proposed collection of information is necessary for the proper performance of the functions of the agency, including whether the information shall have practical utility; (b) the accuracy of the agency's estimate of the burden of the proposed collection of information; (c) the quality, utility, and clarity of the information to be collected; and (d) ways to minimize the burden information to be collected; and (d) ways to minimize the burden of the collection of information on respondents, including through the use of automated collection techniques or other forms of information technology. Consideration will be given to comments and suggestions submitted within 60 days of this publication.

Robert Sargis,

Reports Clearance Officer.

[FR Doc. 2012–15157 Filed 6–20–12; 8:45 am]

BILLING CODE 4184–01–P

DEPARTMENT OF HEALTH AND HUMAN SERVICES

Administration for Community Living

Delegation of Authority

Effective immediately, I hereby delegate to the individual serving as the Administrator for the Administration for Community Living and the Assistant

Secretary for Aging the authority to oversee and administer the operations of the Elder Justice Coordinating Council, as outlined in section 2021 of the Social Security Act, 42 U.S.C. 1397k. This authority may be redelegated.

This delegation excludes the authority to issue regulations and to appoint members of the coordinating council and shall be exercised in accordance with the Department's applicable policies, procedures, and guidance.

Dated: June 4, 2012.

Kathleen Sebelius,

Secretary.

[FR Doc. 2012–15090 Filed 6–20–12; 8:45 am]

BILLING CODE 4154–01–P

DEPARTMENT OF HEALTH AND HUMAN SERVICES

Food and Drug Administration

[Docket No. FDA–2011–N–0624]

Agency Information Collection Activities; Announcement of Office of Management and Budget Approval; Notice of Participation

AGENCY: Food and Drug Administration, HHS.

ACTION: Notice.

SUMMARY: The Food and Drug Administration (FDA) is announcing that a collection of information entitled ''Notice of Participation'' has been approved by the Office of Management and Budget (OMB) under the Paperwork Reduction Act of 1995.

FOR FURTHER INFORMATION CONTACT: Ila S. Mizrachi, Office of Information Management, Food and Drug Administration, 1350 Piccard Dr., PI50–400B, Rockville, MD 20850, 301–796–7726, *ila.mizrachi@fda.hhs.gov.*

SUPPLEMENTARY INFORMATION: On March 30, 2012, the Agency submitted a proposed collection of information entitled ''Notice of Participation'' to OMB for review and clearance under 44 U.S.C. 3507. An Agency may not conduct or sponsor, and a person is not required to respond to, a collection of information unless it displays a currently valid OMB control number. OMB has now approved the information collection and has assigned OMB control number 0910–0191. The approval expires on June 30, 2015. A copy of the supporting statement for this information collection is available on the Internet at *http://www.reginfo.gov/public/do/PRAMain.*

Dated: June 15, 2012.

Leslie Kux,

Assistant Commissioner for Policy.

[FR Doc. 2012–15130 Filed 6–20–12; 8:45 am]

BILLING CODE 4160–01–P

DEPARTMENT OF HEALTH AND HUMAN SERVICES

Food and Drug Administration

[Docket No. FDA–2011–N–0401]

Agency Information Collection Activities; Announcement of Office of Management and Budget Approval; Data to Support Communications Usability Testing, as Used by the Food and Drug Administration

AGENCY: Food and Drug Administration, HHS.

ACTION: Notice.

SUMMARY: The Food and Drug Administration (FDA) is announcing that a collection of information entitled ''Data to Support Communications Usability Testing, as Used by the Food and Drug Administration'' has been approved by the Office of Management and Budget (OMB) under the Paperwork Reduction Act of 1995.

FOR FURTHER INFORMATION CONTACT: Juanmanuel Vilela, Office of Information Management, Food and Drug Administration, 1350 Piccard Dr., PI50–400B, Rockville, MD 20850, 301–796–7651, *Juanmanuel.Vilela@fda.hhs.gov.*

SUPPLEMENTARY INFORMATION: On August 25, 2011, the Agency submitted a proposed collection of information entitled ''Data to Support Communications Usability Testing, as Used by the Food and Drug Administration'' to OMB for review and clearance under 44 U.S.C. 3507. An Agency may not conduct or sponsor, and a person is not required to respond to, a collection of information unless it displays a currently valid OMB control number. OMB has now approved the information collection and has assigned OMB control number 0910–0712. The approval expires on June 30, 2014. A copy of the supporting statement for this information collection is available on the Internet at *http://www.reginfo.gov/public/do/PRAMain.*

Dated: June 15, 2012.

Leslie Kux,

Assistant Commissioner for Policy.

[FR Doc. 2012–15129 Filed 6–20–12; 8:45 am]

BILLING CODE 4160–01–P

DEPARTMENT OF HEALTH AND HUMAN SERVICES

Food and Drug Administration

[Docket No. FDA–2011–N–0781]

Agency Information Collection Activities; Announcement of Office of Management and Budget Approval; Record Retention Requirements for the Soy Protein and Risk of Coronary Heart Disease Health Claim

AGENCY: Food and Drug Administration, HHS.

ACTION: Notice.

SUMMARY: The Food and Drug Administration (FDA) is announcing that a collection of information entitled ''Record Retention Requirements for the Soy Protein and Risk of Coronary Heart Disease Health Claim'' has been approved by the Office of Management and Budget (OMB) under the Paperwork Reduction Act of 1995.

FOR FURTHER INFORMATION CONTACT: Denver Presley, II, Office of Information Management, Food and Drug Administration, 1350 Piccard Dr., PI50–400B, Rockville, MD 20850, 301–796–3793.

SUPPLEMENTARY INFORMATION: On May 7, 2012, the Agency submitted a proposed collection of information entitled ''Record Retention Requirements for the Soy Protein and Risk of Coronary Heart Disease Health Claim'' to OMB for review and clearance under 44 U.S.C. 3507. An Agency may not conduct or sponsor, and a person is not required to respond to, a collection of information unless it displays a currently valid OMB control number. OMB has now approved the information collection and has assigned OMB control number 0910–0428. The approval expires on June 30, 2015. A copy of the supporting statement for this information collection is available on the Internet at *http://www.reginfo.gov/public/do/PRAMain.*

Dated: June 15, 2012.

Leslie Kux,

Assistant Commissioner for Policy.

[FR Doc. 2012–15128 Filed 6–20–12; 8:45 am]

BILLING CODE 4160–01–P

DEPARTMENT OF HEALTH AND HUMAN SERVICES

Food and Drug Administration

[Docket No. FDA–2011–N–0625]

Agency Information Collection Activities; Announcement of Office of Management and Budget Approval; Filing Objections and Requests for a Hearing on a Regulation or Order

AGENCY: Food and Drug Administration, HHS.

ACTION: Notice.

SUMMARY: The Food and Drug Administration (FDA) is announcing that a collection of information entitled ''Filing Objections and Requests for a Hearing on a Regulation or Order'' has been approved by the Office of Management and Budget (OMB) under the Paperwork Reduction Act of 1995.

FOR FURTHER INFORMATION CONTACT: Ila S. Mizrachi, Office of Information Management, Food and Drug Administration, 1350 Piccard Dr., PI50–400B, Rockville, MD 20850, 301–796–7726, *ila.mizrachi@fda.hhs.gov.*

SUPPLEMENTARY INFORMATION: On March 30, 2012, the Agency submitted a proposed collection of information entitled ''Filing Objections and Requests for a Hearing on a Regulation or Order'' to OMB for review and clearance under 44 U.S.C. 3507. An Agency may not conduct or sponsor, and a person is not required to respond to, a collection of information unless it displays a currently valid OMB control number. OMB has now approved the information collection and has assigned OMB control number 0910–0184. The approval expires on June 30, 2015. A copy of the supporting statement for this information collection is available on the Internet at *http://www.reginfo.gov/public/do/PRAMain.*

Dated: June 15, 2012.

Leslie Kux,

Assistant Commissioner for Policy.

[FR Doc. 2012–15132 Filed 6–20–12; 8:45 am]

BILLING CODE 4160–01–P

DEPARTMENT OF HEALTH AND HUMAN SERVICES

Food and Drug Administration

[Docket No. FDA–2012–N–0001]

Gastrointestinal Drugs Advisory Committee; Notice of Meeting

AGENCY: Food and Drug Administration, HHS.

ACTION: Notice.

This notice announces a forthcoming meeting of a public advisory committee of the Food and Drug Administration (FDA). The meeting will be open to the public.

Name of Committee: Gastrointestinal Drugs Advisory Committee.

General Function of the Committee: To provide advice and recommendations to the Agency on FDA's regulatory issues.

DATES: *Date and Time:* The meeting will be held on August 28, 2012, from 8 a.m. to 5 p.m.

Location: DoubleTree by Hilton Hotel Washington, DC/Silver Spring, The Ballrooms, 8727 Colesville Road, Silver Spring, MD. The hotel phone number is (301) 589–5200.

Contact Person: Cindy Hong, Center for Drug Evaluation and Research, Food and Drug Administration, 10903 New Hampshire Ave., WO31–2417, Silver Spring, MD 20993–0002, (301) 796–9001, Fax: (301) 847–8533, email: *GIDAC@fda.hhs.gov,* or FDA Advisory Committee Information Line, 1–800–741–8138 (301–443–0572 in the Washington, DC area), and follow the prompts to the desired center or product area. Please call the Information Line for up-to-date information on this meeting. A notice in the **Federal Register** about last minute modifications that impact a previously announced advisory committee meeting cannot always be published quickly enough to provide timely notice. Therefore, you should always check the Agency's Web site and call the appropriate advisory committee hot line/phone line to learn about possible modifications before coming to the meeting.

Agenda: On August 28, 2012, the committee will discuss the results from clinical trials of supplemental biologics license application (sBLA) 125057/232, for Humira (adalimumab), by Abbott Laboratories, for the proposed indication (use) for reducing signs and symptoms, and achieving clinical remission in adult patients with moderately to severely active ulcerative colitis who have had an inadequate response to conventional therapy.

FDA intends to make background material available to the public no later than 2 business days before the meeting. If FDA is unable to post the background material on its Web site prior to the meeting, the background material will be made publicly available at the location of the advisory committee meeting, and the background material will be posted on FDA's Web site after the meeting. Background material is available at *http://www.fda.gov/AdvisoryCommittees/Calendar/default.htm.* Scroll down to the appropriate advisory committee link.

Procedure: Interested persons may present data, information, or views, orally or in writing, on issues pending before the committee. Written submissions may be made to the contact person on or before August 14, 2012. Oral presentations from the public will be scheduled between approximately 1 p.m. and 2 p.m. Those individuals interested in making formal oral presentations should notify the contact person and submit a brief statement of the general nature of the evidence or arguments they wish to present, the names and addresses of proposed participants, and an indication of the approximate time requested to make their presentation on or before August 6, 2012. Time allotted for each presentation may be limited. If the number of registrants requesting to speak is greater than can be reasonably accommodated during the scheduled open public hearing session, FDA may conduct a lottery to determine the speakers for the scheduled open public hearing session. The contact person will notify interested persons regarding their request to speak by August 7, 2012.

Persons attending FDA's advisory committee meetings are advised that the Agency is not responsible for providing access to electrical outlets.

FDA welcomes the attendance of the public at its advisory committee meetings and will make every effort to accommodate persons with physical disabilities or special needs. If you require special accommodations due to a disability, please contact Cindy Hong at least 7 days in advance of the meeting.

FDA is committed to the orderly conduct of its advisory committee meetings. Please visit our Web site at *http://www.fda.gov/AdvisoryCommittees/AboutAdvisoryCommittees/ucm111462.htm* for procedures on public conduct during advisory committee meetings.

Notice of this meeting is given under the Federal Advisory Committee Act (5 U.S.C. app. 2).

Dated: June 15, 2012.

Leslie Kux,

Assistant Commissioner for Policy.

[FR Doc. 2012–15131 Filed 6–20–12; 8:45 am]

BILLING CODE 4160–01–P

DEPARTMENT OF HEALTH AND HUMAN SERVICES

Indian Health Service

Office of Urban Indian Health Programs; Title V HIV/AIDS Program

Announcement Type: New Limited Competition.

Funding Announcement Number: HHS–2012–IHS–UIHP–0001.

Catalog of Federal Domestic Assistance Number: 93.193.

Key Dates

Application Deadline Date: July 16, 2012.

Review Date: July 30, 2012.

Earliest Anticipated Start Date: September 1, 2012.

I. Funding Opportunity Description

Statutory Authority

The Indian Health Service (IHS) is accepting limited competitive grant applications for the Office of Urban Indian Health Programs Title V HIV/AIDS program. This program is authorized under: the Indian Health Care Improvement Act, as amended, 25 U.S.C. 1653. This program is described in the Catalog of Federal Domestic Assistance under 93.193.

Justification for Limited Competition

The Minority AIDS Initiative funding that the grants are awarded from was awarded to the IHS specifically for Title V urban grantees.

Background

This limited competition announcement seeks to expand the Office of Urban Indian Health Programs' (OUIHP) existing Title V grants to increase awareness of HIV/AIDS status among urban American Indians/Alaska Natives (AI/AN) and to expand, as well as build, the capacity to diagnose and treat HIV/AIDS in the underserved urban AI/AN population. This will provide routine and/or rapid HIV screening, prevention, and pre- and post-test counseling (when appropriate). It will also include referral to services not provided on-site, outreach to high risk urban AI/AN populations, and follow-up with referred patients/clients. Enhancement of urban Indian health program HIV/AIDS activities is necessary to reduce the incidence of HIV/AIDS in the urban Indian communities by increasing access to HIV related services, reducing stigma, and making testing routine.

Purpose

The purpose of this IHS grant announcement is to enhance HIV testing, including rapid testing and/or standard HIV antibody testing, and to provide a more focused effort to address HIV/AIDS prevention, targeting some of the largest urban Indian populations in the United States. It will also include outreach to high risk urban AI/AN populations, referral for services not provided on-site, and follow-up with referred patients/clients. The grantees will attempt to provide routine HIV screening for adults as per 2006 Centers for Disease Control and Prevention (CDC) guidelines and pre- and post-test counseling (when appropriate). These grants will be used to identify best practices to increase capacity at the local level, and assist urban Indian health program sites with meeting HIV testing and treatment needs in urban AI/AN populations in the United States. The nature of these projects will require collaboration with the OUIHP to: (1) Coordinate activities with the IHS National HIV Program; (2) participate in projects in other operating divisions of the Department of Health and Human Services (HHS), such as the CDC, Substance Abuse and Mental Health Services Administration, Health Resource and Services Administration, and the Office of HIV/AIDS Policy; and (3) to the extent permitted by law, submit and share anonymous, non-identifiable data on HIV/AIDS testing, treatment, and education. These grants are also intended to encourage development of sustainable, routine HIV screening programs in urban Indian health program facilities that are aligned with 2006 CDC HIV Screening guidelines (*http://www.cdc.gov/mmwr/preview/mmwrhtml/rr5514a1.htm*). Key features include streamlined consent and counseling procedures (verbal consent, opt-out), a clear HIV screening policy, identifying and implementing any necessary staff training, community awareness, and a clear follow-up protocol for HIV-positive results, including linkages to care. Grantees may choose to bundle HIV tests with sexually transmitted disease (STD) screening.

II. Award Information

Type of Award: Grant.

Estimated Funds Available

The total amount of funding identified for the current fiscal year 2012 is approximately $600,000. Individual award amounts are anticipated to be between $30,000 and $60,000. Competing and continuation awards issued under this announcement are subject to the availability of funds. In the absence of funding, the IHS is under no obligation to make awards that are selected for funding under this announcement.

Anticipated Number of Awards

Approximately 10 awards will be issued under this program announcement.

Project Period

The project period will be for three years and will run consecutively from September 1, 2012 to August 31, 2015.

III. Eligibility Information

1. Eligibility

This funding announcement is limited to Title V Urban Indian organizations, as defined by 25 U.S.C. 1603(29), that meet the following criteria:

- Received State certification to conduct HIV rapid testing (where needed);
- Health professionals and staff have been trained in the HIV/AIDS screening tools, education, prevention, counseling, and other interventions for urban AI/AN;
- Developed programs to address community and group support to sustain risk-reduction skills;
- Implemented HIV/AIDS quality assurance and improvement programs;
- Operate at an IHS defined full ambulatory level (a full ambulatory program is defined as an organization that has a provider on staff at least 40 hours per week) or limited ambulatory level (defined as an organization that has a provider on staff less than 40 hours per week); and
- Must provide proof of non-profit status with the application.

''Urban Indian organization'' means a nonprofit corporate body situated in an urban center, governed by an urban Indian controlled board of directors, and providing for the maximum participation of all interested Indian groups and individuals, which body is capable of legally cooperating with other public and private entities for the purposes of performing the activities described in [25 U.S.C. 1653(a)]. 25 U.S.C. 1603(29).

Note: Please refer to Section IV.2 (Application and Submission Information/Subsection 2, Content and Form of Application Submission) for additional poof of applicant status documents required such as tribal resolutions, proof of non-profit status, etc.

2. Cost Sharing or Matching

The Indian Health Service does not require matching funds or cost sharing for grants or cooperative agreements.

3. Other Requirements

If application budgets exceed the highest dollar amount outlined under the ''Estimated Funds Available'' section within this funding announcement, your application will be considered ineligible and will not be reviewed for further consideration. IHS will not return your application to you. You will be notified by email or certified mail by the Division of Grants Management of this decision.

Proof of Non-Profit Status

Organizations claiming non-profit status must submit proof. A copy of the 501(c)(3) Certificate must be received with your application submission by the deadline due date of July 16, 2012.

Letters of Intent will not be required under this funding opportunity announcement.

Applicants submitting any of the above additional documentation after the initial application submission due date are required to ensure the information was received by the IHS by obtaining documentation confirming delivery (i.e. FedEx tracking, postal return receipt, etc.).

IV. Application and Submission Information

1. Obtaining Application Materials

The application package and detailed instructions for this announcement can be found at *http://www.Grants.gov* or *http://www.ihs.gov/NonMedicalPrograms/gogp/index.cfm?module=gogp_funding.*

Information regarding the electronic application process may be directed to Paul Gettys at (301) 443–2114.

2. Content and Form Application Submission

The applicant must include the project narrative as an attachment to the application package. Mandatory documents for all applicants include:

- Table of contents.
- Abstract (one page) summarizing the project.
- Application forms:
  - SF–424, Application for Federal Assistance.
  - SF–424A, Budget Information—Non-Construction Programs.
  - SF–424B, Assurances—Non-Construction Programs.
- Budget Justification and Narrative (must be single spaced and not exceed 5 pages).
- Project Narrative (must not exceed 20 pages).
  - Background information on the urban Indian organization.
  - Proposed scope of work, objectives, and activities that provide a description of what will be accomplished, including a one-page Timeframe Chart.
- Letter of Support from Organization's Board of Directors.
- 501(c)(3) Certificate (if applicable).
- Biographical sketches for all Key Personnel.
- Contractor/Consultant resumes or qualifications and scope of work.
- Disclosure of Lobbying Activities (SF–LLL).
- Copy of current Negotiated Indirect Cost rate (IDC) agreement (required) in order to receive IDC.
- Organizational Chart (optional).
- Documentation of current OMB A–133 required Financial Audit (if applicable).

Acceptable forms of documentation include:

- Email confirmation from Federal Audit Clearinghouse (FAC) that audits were submitted; or
- Face sheets from audit reports. These can be found on the FAC Web site: *http://harvester.census.gov/sac/dissem/accessoptions.html?submit=Go+To+Database.*

Public Policy Requirements

All Federal-wide public policies apply to IHS grants with exception of the Discrimination policy.

Requirements for Project and Budget Narratives

A. *Project Narrative:* This narrative should be a separate Word document that is no longer than 20 pages and must: be single-spaced, be type written, have consecutively numbered pages, use black type not smaller than 12 characters per one inch, and be printed on one side only of standard size 8½″ x 11″ paper.

Be sure to succinctly answer all questions listed under the evaluation criteria (refer to Section V.1, Evaluation criteria in this announcement) and place all responses and required information in the correct section (noted below), or they will not be considered or scored. These narratives will assist the Objective Review Committee (ORC) in becoming more familiar with the grantee's activities and accomplishments prior to this possible grant award. If the narrative exceeds the page limit, only the first 20 pages will be reviewed. The 20-page limit for the narrative does not include the work plan, standard forms, table of contents, budget, budget justifications, narratives, and/or other appendix items.

There are three parts to the narrative: Part A—Program Information; Part B—Program Planning and Evaluation; and Part C—Program Report. See below for additional details about what must be included in the narrative.

Part A: Program Information
  Section 1: Needs
Part B: Program Planning and Evaluation
  Section 1: Program Plans
  Section 2: Program Evaluation
Part C: Program Report
  Section 1: Describe major activities over the last 24 months.
  Section 2: Describe major accomplishments over the last 24 months.

B. *Budget Narrative:* This narrative must describe the budget requested and match the scope of work described in the project narrative. The budget narrative should not exceed 5 pages.

3. Submission Dates and Times

Applications must be submitted electronically through Grants.gov by 12:00 a.m., midnight Eastern Daylight Time (EDT) on July 16, 2012. Any application received after the application deadline will not be accepted for processing, nor will it be given further consideration for funding. You will be notified by the Division of Grants Management via email or certified mail of this decision.

If technical challenges arise and assistance is required with the electronic application process, contact Grants.gov Customer Support via email to *support@grants.gov* or at (800) 518–4726. Customer Support is available to address questions 24 hours a day, 7 days a week (except on Federal holidays). If problems persist, contact Paul Gettys, Division of Grants Management (DGM) (*Paul.Gettys@ihs.gov*) at (301) 443–5204. Please be sure to contact Mr. Gettys at least ten days prior to the application deadline. Please do not contact the DGM until you have received a Grants.gov tracking number. In the event you are not able to obtain a tracking number, call the DGM as soon as possible.

If an applicant needs to submit a paper application instead of submitting electronically via Grants.gov, prior approval must be requested and obtained (see Section IV.6 below for additional information). The waiver must be documented in writing (emails are acceptable), *before* submitting a paper application. A copy of the written approval must be submitted along with the hardcopy that is mailed to the DGM. Once your waiver request has been approved, you will receive a confirmation of approval and the mailing address to submit your application. Paper applications that are submitted without a waiver from the Acting Director of DGM will not be reviewed or considered further for funding. You will be notified via email or certified email of this decision by the Grants Management Officer of DGM. Paper applications must be received by

the DGM no later than 5:00 p.m., EDT, on the application deadline date. Late applications will not be accepted for processing or considered for funding.

Other Important Due Dates

Proof of Non-Profit Status: Due date July 16, 2012.

4. Intergovernmental Review

Executive Order 12372 requiring intergovernmental review is not applicable to this program.

5. Funding Restrictions

- Pre-award costs are not allowable.
- The available funds are inclusive of direct and appropriate indirect costs.
- Only one grant/cooperative agreement will be awarded per applicant.
- IHS will not acknowledge receipt of applications.

6. Electronic Submission Requirements

All applications must be submitted electronically. Please use the *http://www.Grants.gov* Web site to submit an application electronically and select the ''Find Grant Opportunities'' link on the homepage. Download a copy of the application package, complete it offline, and then upload and submit the completed application via the *http://www.Grants.gov* Web site. Electronic copies of the application may not be submitted as attachments to email messages addressed to IHS employees or offices.

Applicants that receive a waiver to submit paper application documents must follow the rules and timelines that are noted above. The applicant must seek assistance at least ten days prior to the application deadline.

Applicants that do not adhere to the timelines for Central Contractor Registry (CCR) and/or *http://www.Grants.gov* registration or that fail to request timely assistance with technical issues will not be considered for a waiver to submit a paper application.

Please be aware of the following:

a. Please search for the application package in *http://www.Grants.gov* by entering the CFDA number or the Funding Opportunity Number. Both numbers are located in the header of this announcement.

b. If you experience technical challenges while submitting your application electronically, please contact Grants.gov Support directly at: *support@grants.gov* or (800) 518–4726. Customer Support is available to address questions 24 hours a day, 7 days a week (except on Federal holidays).

c. Upon contacting Grants.gov, obtain a tracking number as proof of contact. The tracking number is helpful if there are technical issues that cannot be resolved and waiver from the agency must be obtained.

d. If it is determined that a waiver is needed, you must submit a request in writing (emails are acceptable) to *GrantsPolicy@ihs.gov* with a copy to *Tammy.Bagley@ihs.gov.* Please include a clear justification for the need to deviate from our standard electronic submission process.

e. If the waiver is approved, the application should be sent directly to the DGM by the deadline date of July 16, 2012, by 5:00 p.m. EDT.

f. Applicants are strongly encouraged not to wait until the deadline date to begin the application process through Grants.gov as the registration process for CCR and Grants.gov could take up to fifteen working days.

g. Please use the optional attachment feature in Grants.gov to attach additional documentation that may be requested by the DGM.

h. All applicants must comply with any page limitation requirements described in this Funding Announcement.

i. After you electronically submit your application, you will receive an automatic acknowledgment from Grants.gov that contains a Grants.gov tracking number. The DGM will download your application from Grants.gov and provide necessary copies to the appropriate agency officials. Neither the DGM nor the OUIHP will notify applicants that the application has been received.

j. Email applications will not be accepted under this announcement.

Dun and Bradstreet (D&B) Data Universal Numbering System (DUNS)

All IHS applicants and grantee organizations are required to obtain a DUNS number and maintain an active registration in the CCR database. The DUNS number is a unique 9-digit identification number provided by D&B which uniquely identifies your entity. The DUNS number is site specific; therefore, each distinct performance site may be assigned a DUNS number. Obtaining a DUNS number is easy, and there is no charge. To obtain a DUNS number, you may access it through *http://fedgov.dnb.com/webform,* or to expedite the process, call (866) 705–5711.

Effective October 1, 2010, all HHS recipients were asked to start reporting information on subawards, as required by the Federal Funding Accountability and Transparency Act of 2006, as amended (''Transparency Act''). Accordingly, all IHS grantees must notify potential first-tier subrecipients that no entity may receive a first-tier subaward unless the entity has provided its DUNS number to the prime grantee organization. This requirement ensures the use of a universal identifier to enhance the quality of information available to the public pursuant to the Transparency Act.

Central Contractor Registry (CCR)

Organizations that have not registered with CCR will need to obtain a DUNS number first and then access the CCR online registration through the CCR home page at *https://www.bpn.gov/ccr/default.aspx* (U.S. organizations will also need to provide an Employer Identification Number from the Internal Revenue Service that may take an additional 2–5 weeks to become active). Completing and submitting the registration takes approximately one hour to complete and your CCR registration will take approximately 3–5 business days to process. Registration with the CCR is free of charge. Applicants may register online at *https://www.bpn.gov/ccrupdate/NewRegistration.aspx.*

Additional information on implementing the Transparency Act, including the specific requirements for DUNS and CCR, can be found on the IHS Grants Management, Grants Policy Web site: *http://www.ihs.gov/NonMedicalPrograms/gogp/index.cfm?module=gogp_policy_topics.*

V. Application Review Information

The instructions for preparing the application narrative also constitute the evaluation criteria for reviewing and scoring the application. Weights assigned to each section are noted in parentheses. The 20 page narrative should include only the first year of activities; information for multi-year projects should be included as an appendix. See ''Multi-year Project Requirements'' at the end of this section for more information. The narrative section should be written in a manner that is clear to outside reviewers unfamiliar with prior related activities of the applicant. It should be well organized, succinct, and contain all information necessary for reviewers to understand the project fully. Points will be assigned to each evaluation criteria adding up to a total of 100 points. A minimum score of 60 points is required for funding. Points are assigned as follows:

1. Criteria

A. Understanding of the Need and Necessary Capacity (15 points)

1. Understanding of the Problem.

a. Define the project target population, identify their unique characteristics, and describe the impact of HIV on the population.

b. Describe the gaps/barriers in HIV testing for the population.

c. Describe the unique cultural or sociological barriers of the target population to adequate access for the described services.

2. Facility Capability.

a. Briefly describe your clinic programs and services and how this initiative will assist to commence, compliment, and/or expand existing efforts.

b. Describe your clinic's ability to conduct this initiative through:

- Your clinic's present resources.
- Collaboration with other providers.
- Partnerships established to accept referrals for counseling, testing, and referral and confirmatory blood tests and/or social services for individuals who test HIV positive.
- Linkages to treatment and care: partnerships established to refer out of your clinic for specialized treatment, care, confirmatory testing (if applicable), and counseling services.

B. Work Plan (40 points)

1. Project Goal and Objectives.

Address all of the following program goals and objectives of the project. The objectives must be specific as well as quantitatively and qualitatively measurable to ensure achievement of goal(s).

- Implementation Plan.

a. Identify the proposed program activities and explain how these activities will build capacity to meet local level urban AI/AN needs and increase and sustain HIV screening.

b. Describe policy and procedure changes anticipated for implementation that include:

(1) Support of the 2006 CDC Revised HIV Testing Recommendations.

(2) Community awareness.

(3) Age ranges of persons to be screened.

(4) Bundling of HIV testing with STD tests.

(5) Type of HIV Screen/Test (Rapid, Conventional, Western Blot) and who will perform the test (in-house, send-out).

(6) Protocols to integrate strong referrals or care continuity into local system of care.

c. Provide a clear timeline with quarterly milestones for project implementation.

d. Certify that the program identified and agreed to follow the state regulations for HIV testing in their state and how the clinic will follow their state reporting guidelines for seropositive results.

e. Describe how individuals will be selected for testing to identify selection criteria and which group(s)—if any—will be, via state laws or regulations, offered testing in an opt-out format.

f. Describe how the program will ensure that clients receive their test results, particularly clients who test positive.

g. Describe how the program will ensure that individuals with initial HIV-positive test results will receive confirmatory tests. If you do not provide confirmatory HIV testing, you must provide a letter of intent or Memorandum of Understanding with an external laboratory documenting the process through which initial HIV-positive test results will be confirmed.

h. Describe the program strategies for linking potential seropositive patients to care.

i. Describe the program quality assurance strategies.

j. Describe how the program will train, support and retain staff providing counseling and testing.

k. Describe how the program will ensure client confidentiality.

l. Describe how the program will ensure that its services are culturally fluent and relevant.

m. Describe how the program will attempt to streamline procedures so as to reduce the overall cost per test administered.

C. Project Evaluation (20 points)

1. Evaluation Plan.

The grantee shall provide a plan for building program capacity to meet the needs of the local level urban AI/AN population as well as monitoring and evaluating the HIV rapid test and/or standard HIV antibody test.

2. Reporting Requirements.

The following quantitative and qualitative measures shall be addressed:

- Required Quantitative Indicators (quantitative).

a. Number of tests performed and number of test refusals.

b. Gender, age, sexual orientation, and race/ethnicity of persons receiving services.

c. Number of clients learning of their serostatus for the first time via this testing initiative (unique patients, non-repeated tests).

d. Number of reactive tests and confirmed seropositive (actual and proportion).

e. Number of clients linked to care/treatment or referrals for prevention counseling as defined by attendance of at least one appointment, within three months of diagnosis.

f. Number of individuals receiving their confirmatory test results.

g. Number of patients with positive test result who are re-engaged for care.

h. Number of referral and linkage to other medical and social services such as mental health, substance abuse, safety/domestic violence, and other services as needed.

i. Number of patients not treated/linked to care for HIV and HIV-related morbidities.

- Required Qualitative Information

a. Measures in place to protect confidentiality.

b. Identify barriers of implementation as well as lessons learned for best practices to share with other urban Indian organizations, as well as IHS and Tribal entities.

c. Sustainability plan and measures of ongoing testing in future years, after grant money has been spent.

- Other quantitative indicators may be collected to improve clinic processes and add to information reported; however, they are not required.

a. Number of clients who refused due to prior knowledge of status.

b. Number of rapid versus standard antibody test.

c. Number of false negatives and/or positives after confirmatory testing.

- Develop a plan for obtaining knowledge, attitudes, and behavior data pending official approval of patient survey.

D. Organizational Capabilities Qualifications (10 points)

This section outlines the broader capacity of the organization to complete the project outlined in the work plan. It includes the identification of personnel responsible for completing tasks and the chain of responsibility for successful completion of the project outlined in the work plan.

1. Describe the organizational structure.

2. Describe the ability of the organization to manage the proposed project. Include information regarding similarly sized projects in scope and financial assistance as well as other grants and projects successfully completed.

3. Describe what equipment (i.e., phone, Web sites, etc.) and facility space (i.e., office space) will be available for use during the proposed project. Include information about any equipment not currently available that will be purchased throughout the agreement.

4. List key personnel who will work on the project.

• Identify existing personnel and new program staff to be hired.

• In the appendix, include position descriptions and resumes for all key personnel. Position descriptions should clearly describe each position and duties indicating desired qualifications, experience, and requirements related to the proposed project and how they will be supervised. Resumes must indicate that the proposed staff member is qualified to carry out the proposed project activities and who will determine if the work of a contractor is acceptable.

• Note who will be writing the progress reports.

• If a position is to be filled, indicate that information on the proposed position description.

• If the project requires additional personnel beyond those covered by the supplemental grant, (i.e., Information Technology support, volunteers, interviewers, etc.), note these and address how these positions will be filled and, if funds are required, the source of these funds.

• If personnel are to be only partially funded by this supplemental grant, indicate the percentage of time to be allocated to this project and identify the resources used to fund the remainder of the individual's salary.

E. Categorical Budget and Budget Justification (15 points)

This section should provide a clear estimate of the project program costs and justification for expenses for the entire grant period. The budget and budget justification should be consistent with the tasks identified in the work plan. The budget focus should be on routinizing and sustaining HIV testing services as well as reducing the cost per person tested.

1. Categorical budget (Form SF 424A, Budget Information Non-Construction Programs) completing each of the budget periods requested.

2. Narrative justification for all costs, explaining why each line item is necessary or relevant to the proposed project. Include sufficient details to facilitate the determination of cost allowability.

3. Budget justification should include a brief program narrative for the second and third years.

4. If indirect costs are claimed, indicate and apply the current negotiated rate to the budget. Include a copy of the rate agreement in the appendix.

Multi-Year Project Requirements (if applicable)

Projects requiring second and/or third year must include a brief project narrative and budget (one additional page per year) addressing the developmental plans for each additional year of the project.

Appendix Items

1. Work plan, logic model and/or time line for proposed objectives.

2. Position descriptions for key staff.

3. Resumés of key staff that reflect current duties.

4. Consultant or contractor proposed scope of work and letter of commitment (if applicable).

5. Current Indirect Cost Agreement.

6. Organizational chart(s) highlighting proposed project staff and their supervisors as well as other key contacts within the organization and key community contacts.

7. Map of area to benefit project identifying where target population resides and project location(s). Include trails, parks, schools, bike paths and other such applicable information.

8. Additional documents to support narrative (i.e. data tables, key news articles, etc.).

1. Review and Selection

Each application will be prescreened by the DGM staff for eligibility and completeness as outlined in the funding announcement. Incomplete applications and applications that are non-responsive to the eligibility criteria will not be referred to the ORC. Applicants will be notified by DGM, via email or letter, to outline minor missing components (i.e., signature on the SF–424, audit documentation, key contact form) needed for an otherwise complete application. All missing documents must be sent to DGM on or before the due date listed in the email of notification of missing documents required.

To obtain a minimum score for funding by the ORC, applicants must address all program requirements and provide all required documentation. Applicants that receive less than a minimum score will be considered to be ''Disapproved'' and will be informed via email or regular mail by the IHS Program Office of their application's deficiencies. A summary statement outlining the strengths and weaknesses of the application will be provided to each disapproved applicant. The summary statement will be sent to the Authorized Organizational Representative (AOR) that is identified on the face page (SF–424), of the application within 60 days of the completion of the Objective Review.

VI. Award Administration Information

1. Award Notices

The Notice of Award (NoA) is a legally binding document signed by the Grants Management Officer and serves as the official notification of the grant award. The (NoA) will be initiated by the DGM and will be mailed via postal mail or emailed to each entity that is approved for funding under this announcement. The NoA is the authorizing document for which funds are dispersed to the approved entities and reflects the amount of Federal funds awarded, the purpose of the grant, the terms and conditions of the award, the effective date of the award, and the budget/project period.

Disapproved Applicants

Applicants who received a score less than the recommended funding level for approval, 60, and were deemed to be disapproved by the Objective Review Committee, will receive an Executive Summary Statement from the IHS Program Office within 30 days of the conclusion of the ORC outlining the weaknesses and strengths of their application submitted. The IHS program office will also provide additional contact information as needed to address questions and concerns as well as provide technical assistance if desired.

Approved But Unfunded Applicants

Approved but unfunded applicants that met the minimum scoring range and were deemed by the ORC to be ''Approved,'' but were not funded due to lack of funding, will have their applications held by DGM for a period of 1 year. If additional funding becomes available during the course of FY2012, the approved application maybe re-considered by the awarding program office for possible funding. You will also receive an Executive Summary Statement from the IHS Program Office within 30 days of the conclusion of the ORC.

Note: Any correspondence other than the official NoA signed by an IHS Grants Management Official announcing to the Project Director that an award has been made to their organization is not an authorization to implement their program on behalf of IHS.

2. Administrative Requirements

Grants are administered in accordance with the following regulations, policies, and OMB cost principles:

A. The criteria as outlined in this Program Announcement.

B. Administrative Regulations for Grants:

• 45 CFR part 92, Uniform Administrative Requirements for Grants and Cooperative Agreements to State, Local and Tribal Governments.

• 45 CFR part 74, Uniform Administrative Requirements for Awards and Subawards to Institutions of Higher Education, Hospitals, and other Non-profit Organizations.

C. Grants Policy:

• HHS Grants Policy Statement, Revised 01/07.

D. Cost Principles:

• *Title 2:* Grant and Agreements, Part 225—Cost Principles for State, Local, and Indian Tribal Governments (OMB Circular A–87).

• *Title 2:* Grant and Agreements, Part 230—Cost Principles for Non-Profit Organizations (OMB Circular A–122).

E. Audit Requirements:

• OMB Circular A–133, Audits of States, Local Governments, and Non-profit Organizations.

3. Indirect Costs

This section applies to all grant recipients that request reimbursement of indirect costs (IDC) in their grant application. In accordance with HHS Grants Policy Statement, Part II–27, IHS requires applicants to obtain a current IDC rate agreement prior to award. The rate agreement must be prepared in accordance with the applicable cost principles and guidance as provided by the cognizant agency or office. A current rate covers the applicable grant activities under the current award's budget period. If the current rate is not on file with the DGM at the time of award, the IDC portion of the budget will be restricted. The restrictions remain in place until the current rate is provided to the DGM.

Generally, IDC rates for IHS grantees are negotiated with the Division of Cost Allocation (DCA) *http://rates.psc.gov/* and the Department of Interior (National Business Center) *http://www.aqd.nbc.gov/services/ICS.aspx.* If your organization has questions regarding the indirect cost policy, please call (301) 443–5204 to request assistance.

1. Reporting Requirements

Grantees must submit required reports consistent with the applicable deadlines. Failure to submit required reports within the time allowed may result in suspension or termination of an active grant, withholding of additional awards for the project, or other enforcement actions such as withholding of payments or converting to the reimbursement method of payment. Continued failure to submit required reports may result in one or both of the following: (1) The imposition of special award provisions; and (2) the non-funding or non-award of other eligible projects or activities. This requirement applies whether the delinquency is attributable to the failure of the grantee organization or the individual responsible for preparation of the reports.

The reporting requirements for this program are noted below.

• Progress Reports

Program progress reports are required semi annually, within 30 days after the budget period ends. These reports must include a brief comparison of actual accomplishments to the goals established for the period, or, if applicable, provide sound justification for the lack of progress, and other pertinent information as required. A final report must be submitted within 90 days of expiration of the budget/project period.

• Financial Reports

Federal Financial Report FFR (SF–425), Cash Transaction Reports are due 30 days after the close of every calendar quarter to the Division of Payment Management, HHS at: *http://www.dpm.psc.gov.* It is recommended that you also send a copy of your FFR (SF–425) report to your Grants Management Specialist. Failure to submit timely reports may cause a disruption in timely payments to your organization.

Grantees are responsible and accountable for accurate information being reported on all required reports: the Progress Reports and Federal Financial Report.

• Federal Subaward Reporting System (FSRS)

This award may be subject to the Transparency Act subaward and executive compensation reporting requirements of 2 CFR part 170.

The Federal Funding Accountability and Transparency Act of 2006, as amended (''Transparency Act''), requires the Office of Management and Budget (OMB) to establish a single searchable database, accessible to the public, with information on financial assistance awards made by Federal agencies. The Transparency Act also includes a requirement for recipients of Federal grants to report information about first-tier subawards and executive compensation under Federal assistance awards.

Effective October 1, 2010 IHS implemented a Term of Award into all IHS Standard Terms and Conditions, NoAs and funding announcements regarding this requirement. This IHS Term of Award is applicable to all IHS grant and cooperative agreements issued on or after October 1, 2010, with a $25,000 subaward obligation dollar threshold met for any specific reporting period. Additionally, all new (discretionary) IHS awards (where the project period is made up of more than one budget period) and were: 1) the project period start date was October 1, 2010 or after and 2) the primary awardee will have a $25,000 subaward obligation dollar threshold during any specific reporting period will be required to conduct address the FSRS reporting. For the full IHS award term implementing this requirement and additional award applicability information, visit the Grants Management Grants Policy Web site at: *http://www.ihs.gov/NonMedicalPrograms/gogp/index.cfm?module=gogp_policy_topics.*

Telecommunication for the hearing impaired is available at: TTY (301) 443–6394.

VII. Agency Contacts

1. Questions on the programmatic issues may be directed to:

Danielle Steward, Health Systems Specialist, Office of Urban Indian Health Programs, 801 Thompson Avenue, Suite 200, Rockville, MD 20852, (301) 443–4680 or *danielle.steward@ihs.gov.*

2. Questions on grants management and fiscal matters may be directed to:

Patience Musikikongo, Grants Management Specialist, 801 Thompson Avenue, TMP Suite 360, Rockville, MD 20852, (301) 443–5204 or *Patience.Musikikongo@ihs.gov.*

VIII. Other Information

The Public Health Service strongly encourages all cooperative agreement and contract recipients to provide a smoke-free workplace and promote the non-use of all tobacco products. In addition, Public Law 103–227, the Pro-Children Act of 1994, prohibits smoking in certain facilities (or in some cases, any portion of the facility) in which regular or routine education, library, day care, health care, or early childhood development services are provided to children. This is consistent with the HHS mission to protect and advance the physical and mental health of the American people.

Date: June 4, 2012.

Yvette Roubideaux,

Director, Indian Health Service.

[FR Doc. 2012–15099 Filed 6–20–12; 8:45 am]

BILLING CODE 4165–16–P

DEPARTMENT OF HEALTH AND HUMAN SERVICES

Indian Health Service

Reimbursement Rates for Calendar Year 2012 Correction

AGENCY: Indian Health Service, HHS.

ACTION: Notice; correction.

SUMMARY: The Indian Health Service published a document in the **Federal Register** on June 6, 2012, concerning rates for inpatient and outpatient medical care provided by Indian Health Service facilities for Calendar Year 2012 for Medicare and Medicaid beneficiaries of other Federal Programs. The document contained five incorrect rates.

FOR FURTHER INFORMATION CONTACT: Mr. Carl Harper, Director, Office of Resource Access and Partnerships, Indian Health Service, 801 Thompson Avenue, Suite 360, Rockville, MD 20852, Telephone 301–443–1553. (This is not a toll-free number.)

Corrections

In the **Federal Register** of June 6, 2012, in FR Doc. 2012–13627, on page 33470, in the second column, under the heading ''Inpatient Hospital Per Diem Rate (Excludes Physician/Practitioner Services)'' ''Lower 48 States: $2169. Alaska: $2,350.'' should read ''Lower 48 States: $2165. Alaska: $2347.'' Under the heading, ''Outpatient Per Visit Rate (Excluding Medicare) ''Lower 48 States: $317.'' should read ''Lower 48 States: $316.'' Under the heading, ''Medicare Part B Inpatient Ancillary Per Diem Rate'' ''Lower 48 States: $477. Alaska: $811.'' should read ''Lower 48 States: $476. Alaska: $810.''

Dated: June 8, 2012.

Randy Grinnell,

Deputy Director, Indian Health Service.

[FR Doc. 2012–15095 Filed 6–20–12; 8:45 am]

BILLING CODE 4165–16–P

DEPARTMENT OF HEALTH AND HUMAN SERVICES

National Institutes of Health

National Institute of Neurological Disorders and Stroke; Notice of Closed Meetings

Pursuant to section 10(d) of the Federal Advisory Committee Act, as amended (5 U.S.C. App.), notice is hereby given of the following meetings.

The meetings will be closed to the public in accordance with the provisions set forth in sections 552b(c)(4) and 552b(c)(6), Title 5 U.S.C., as amended. The grant applications and the discussions could disclose confidential trade secrets or commercial property such as patentable materials, and personal information concerning individuals associated with the grant applications, the disclosure of which would constitute a clearly unwarranted invasion of personal privacy.

Name of Committee: National Institute of Neurological Disorders and Stroke Special Emphasis Panel, NINDS Center for Clinical Trial Resources.

Date: July 10, 2012.

Time: 8:30 a.m. to 5:00 p.m.

Agenda: To review and evaluate grant applications.

Place: The St. Regis Hotel, 923 16th Street NW., Washington, DC 20006.

Contact Person: Philip Wiethorn, Scientific Review Officer, Scientific Review Branch, Division of Extramural Research, NINDS/NIH/DHHS, NSC, 6001 Executive Blvd., Suite 3208, MSC 9529, Bethesda, MD 20892–9529, 301–496–5388, *wiethorp@ninds.nih.gov.*

This notice is being published less than 15 days prior to the meeting due to the timing limitations imposed by the review and funding cycle.

Name of Committee: National Institute of Neurological Disorders and Stroke Special Emphasis Panel, PD Biomarker Review.

Date: July 18, 2012.

Time: 8:00 a.m. to 6:00 p.m.

Agenda: To review and evaluate grant applications.

Place: Holiday Inn National Airport Hotel, 2650 Jefferson Davis Highway, Arlington, VA 22202.

Contact Person: Birgit Neuhuber, Ph.D., Scientific Review Officer, Scientific Review Branch, Division of Extramural Research, NINDS/NIH/DHHS, NSC, 6001 Executive Blvd., Suite 3208, MSC 9529, Bethesda, MD 20892–9529, *neuhuber@ninds.nih.gov.*

This notice is being published less than 15 days prior to the meeting due to the timing limitations imposed by the review and funding cycle.

Name of Committee: National Institute of Neurological Disorders and Stroke Special Emphasis Panel, Stroke Prevention/Intervention Research Program (SPIRP) Special Emphasis Panel.

Date: July 26–27, 2012.

Time: 8:00 a.m. to 5:00 p.m.

Agenda: To review and evaluate grant applications.

Place: Hyatt Regency Bethesda, One Bethesda Metro Center, 7400 Wisconsin Avenue, Bethesda, MD 20814.

Contact Person: Natalia Strunnikova, Ph.D., Scientific Review Officer, Scientific Review Branch, Division of Extramural Research, NINDS/NIH/DHHS, NSC, 6001 Executive Blvd., Suite 3208, MSC 9529, Bethesda, MD 20892–9529, 301–402–0288, *Natalia.Strunnilova@nih.gov.*

(Catalogue of Federal Domestic Assistance Program Nos. 93.853, Clinical Research Related to Neurological Disorders; 93.854, Biological Basis Research in the Neurosciences, National Institutes of Health, HHS)

Dated: June 14, 2012.

Jennifer S. Spaeth,

Director, Office of Federal Advisory Committee Policy.

[FR Doc. 2012–15210 Filed 6–20–12; 8:45 am]

BILLING CODE 4140–01–P

DEPARTMENT OF HEALTH AND HUMAN SERVICES

National Institutes of Health

Eunice Kennedy Shriver National Institute of Child Health & Human Development; Notice of Closed Meeting

Pursuant to section 10(d) of the Federal Advisory Committee Act, as amended (5 U.S.C. App.), notice is hereby given of the following meeting.

The meeting will be closed to the public in accordance with the provisions set forth in sections 552b(c)(4) and 552b(c)(6), Title 5 U.S.C., as amended. The grant applications and the discussions could disclose confidential trade secrets or commercial property such as patentable material, and personal information concerning individuals associated with the grant applications, the disclosure of which would constitute a clearly unwarranted invasion of personal privacy.

Name of Committee: National Institute of Child Health and Human Development Special Emphasis Panel; PMTCT.

Date: July 17–18, 2012.

Time: 8:00 a.m. to 5:00 p.m.

Agenda: To review and evaluate grant applications.

Place: Doubletree Hotel Bethesda, (Formerly Holiday Inn Select), 8120 Wisconsin Avenue, Bethesda, MD 20814.

Contact Person: Rita Anand, Ph.D., Scientific Review Officer, Division of Scientific Review, Eunice Kennedy Shriver National Institute of Child Health and Human Development, NIH, 6100 Executive Blvd., Room 5b01, Bethesda, MD 20892, 301–496–1487, *anandr@mail.nih.gov.*

(Catalogue of Federal Domestic Assistance Program Nos. 93.864, Population Research; 93.865, Research for Mothers and Children; 93.929, Center for Medical Rehabilitation Research; 93.209, Contraception and Infertility Loan Repayment Program, National Institutes of Health, HHS)

Dated: June 14, 2012.

Jennifer S. Spaeth,

Director, Office of Federal Advisory Committee Policy.

[FR Doc. 2012–15155 Filed 6–20–12; 8:45 am]

BILLING CODE 4140–01–P

DEPARTMENT OF HEALTH AND HUMAN SERVICES

National Institutes of Health

Eunice Kennedy Shriver National Institute of Child Health & Human Development; Notice of Closed Meeting

Pursuant to section 10(d) of the Federal Advisory Committee Act, as amended (5 U.S.C. App.), notice is hereby given of the following meeting.

The meeting will be closed to the public in accordance with the provisions set forth in sections 552b(c)(4) and 552b(c)(6), Title 5 U.S.C., as amended. The grant applications and the discussions could disclose confidential trade secrets or commercial property such as patentable material, and personal information concerning individuals associated with the grant applications, the disclosure of which would constitute a clearly unwarranted invasion of personal privacy.

Name of Committee: National Institute of Child Health and Human Development Special Emphasis Panel; ZHD1 DSR–Z 41 2.

Date: July 19, 2012.

Time: 2:00 p.m. to 4:00 p.m.

Agenda: To review and evaluate grant applications.

Place: National Institutes of Health, 6100 Executive Boulevard, Rockville, MD 20852, (Telephone Conference Call).

Contact Person: Peter Zelazowski, Ph.D., Scientific Review Officer, Division of Scientific Review, Eunice Kennedy Shriver National Institute of Child Health and Human Development, NIH, 6100 Executive Boulevard, Room 5B01, Bethesda, MD 20892–7510, 301–435–6902, *peter.zelazowski@nih.gov.*

(Catalogue of Federal Domestic Assistance Program Nos. 93.864, Population Research; 93.865, Research for Mothers and Children; 93.929, Center for Medical Rehabilitation Research; 93.209, Contraception and Infertility Loan Repayment Program, National Institutes of Health, HHS)

Dated: June 14, 2012.

Jennifer S. Spaeth,

Director, Office of Federal Advisory Committee Policy.

[FR Doc. 2012–15153 Filed 6–20–12; 8:45 am]

BILLING CODE 4140–01–P

DEPARTMENT OF HEALTH AND HUMAN SERVICES

National Institutes of Health

National Institute of Allergy and Infectious Diseases; Notice of Closed Meeting

Pursuant to section 10(d) of the Federal Advisory Committee Act, as amended (5 U.S.C. App.), notice is hereby given of the following meeting.

The meeting will be closed to the public in accordance with the provisions set forth in sections 552b(c)(4) and 552b(c)(6), Title 5 U.S.C., as amended. The grant applications and the discussions could disclose confidential trade secrets or commercial property such as patentable material, and personal information concerning individuals associated with the grant applications, the disclosure of which would constitute a clearly unwarranted invasion of personal privacy.

Name of Committee: National Institute of Allergy and Infectious Diseases Special Emphasis Panel; NIH Support for Conferences and Scientific Meetings (R13).

Date: July 17–19, 2012.

Time: 8:00 a.m. to 5:00 p.m.

Agenda: To review and evaluate grant applications.

Place: National Institutes of Health, 6700B Rockledge Drive, Bethesda, MD 20817, (Telephone Conference Call).

Contact Person: Kelly Y. Poe, Ph.D., Scientific Review Officer, Scientific Review Program, DEA/NIAID/NIH/DHHS, 6700–B Rockledge Drive, MDS–7616, Bethesda, MD 20892–7616, 301–451–2639, *poeky@niaid.nih.gov.*

(Catalogue of Federal Domestic Assistance Program Nos. 93.855, Allergy, Immunology, and Transplantation Research; 93.856, Microbiology and Infectious Diseases Research, National Institutes of Health, HHS)

Dated: June 14, 2012.

Jennifer S. Spaeth,

Director, Office of Federal Advisory Committee Policy.

[FR Doc. 2012–15152 Filed 6–20–12; 8:45 am]

BILLING CODE 4140–01–P

DEPARTMENT OF HEALTH AND HUMAN SERVICES

National Institutes of Health

National Center for Advancing Translational Sciences; Notice of Closed Meeting

Pursuant to section 10(d) of the Federal Advisory Committee Act, as amended (5 U.S.C. App.), notice is hereby given of the following meeting.

The meeting will be closed to the public in accordance with the provisions set forth in sections 552b(c)(4) and 552b(c)(6), Title 5 U.S.C., as amended. The grant applications and the discussions could disclose confidential trade secrets or commercial property such as patentable material, and personal information concerning individuals associated with the grant applications, the disclosure of which would constitute a clearly unwarranted invasion of personal privacy.

Name of Committee: National Center for Advancing Translational Sciences Special Emphasis Panel; Division of Comparative Medicine Peer Review Meeting; Office of Research Infrastructure Programs (ORIP); Division of Program Coordination, Planning, and Strategic Initiatives (DPCPSI); Office of the Director.

Date: July 11, 2012.

Time: 8:00 a.m. to 5:00 p.m.

Agenda: To review and evaluate grant applications.

Place: Hilton Washington/Rockville, 1750 Rockville Pike, Rockville, MD 20852.

Contact Person: Martha F. Matocha, Ph.D., Scientific Review Officer, Office of Grants Management and Review, National Center for Advancing Translational Sciences, National Institutes of Health, 6701 Democracy Blvd., Dem. 1, Room 1070, MSC 4874, Bethesda, MD 20892–4874, 301–435–0810, *matocham@mail.nih.gov.*

Dated: June 14, 2012.

Jennifer S. Spaeth,

Director, Office of Federal Advisory Committee Policy.

[FR Doc. 2012–15151 Filed 6–20–12; 8:45 am]

BILLING CODE 4140–01–P

DEPARTMENT OF HEALTH AND HUMAN SERVICES

National Institutes of Health

Center for Scientific Review; Notice of Closed Meetings

Pursuant to section 10(d) of the Federal Advisory Committee Act, as amended (5 U.S.C. App.), notice is hereby given of the following meetings.

The meetings will be closed to the public in accordance with the provisions set forth in sections 552b(c)(4) and 552b(c)(6), Title 5 U.S.C., as amended. The grant applications and the discussions could disclose confidential trade secrets or commercial property such as patentable material, and personal information concerning individuals associated with the grant applications, the disclosure of which would constitute a clearly unwarranted invasion of personal privacy.

Name of Committee: Center for Scientific Review Special Emphasis Panel; Program Project: Stem Cell Self-Renewal and Differentiation.

Date: July 17–18, 2012.

Time: 8:00 a.m. to 5:00 p.m.

Agenda: To review and evaluate grant applications.

Place: National Institutes of Health, 6701 Rockledge Drive, Bethesda, MD 20892, (Virtual Meeting).

Contact Person: Cathleen L Cooper, Ph.D., Scientific Review Officer, Center for Scientific Review, National Institutes of Health, 6701 Rockledge Drive, Room 4208, MSC 7812, Bethesda, MD 20892, 301–443–4512, *cooperc@csr.nih.gov.*

Name of Committee: Center for Scientific Review Special Emphasis Panel; Member Conflict: Diabetes and Obesity.
Date: July 17, 2012.
Time: 8:00 a.m. to 5:00 p.m.
Agenda: To review and evaluate grant applications.
Place: National Institutes of Health, 6701 Rockledge Drive, Bethesda, MD 20892, (Virtual Meeting).
Contact Person: Gary Hunnicutt, Ph.D., Scientific Review Officer, Center for Scientific Review, National Institutes of Health, 6701 Rockledge Drive, Room 6164, MSC 7892, Bethesda, MD 20892, 301–435–0229, *gary.hunnicutt@nih.gov.*

Name of Committee: Center for Scientific Review Special Emphasis Panel; Program Project: Structural Biophysics of DNA Repair Mechanisms.
Date: July 17–19, 2012.
Time: 8:00 a.m. to 12:00 p.m.
Agenda: To review and evaluate grant applications.
Place: National Institutes of Health, 6701 Rockledge Drive, Bethesda, MD 20892, (Virtual Meeting).
Contact Person: James W Mack, Ph.D., Scientific Review Officer, Center for Scientific Review, National Institutes of Health, 6701 Rockledge Drive, Room 4154, MSC 7806, Bethesda, MD 20892, (301) 435–2037, *mackj2@csr.nih.gov.*

Name of Committee: Center for Scientific Review Special Emphasis Panel; Pulmonary Hypertension Member Conflicts.
Date: July 17–18, 2012.
Time: 9:00 a.m. to 6:00 p.m.
Agenda: To review and evaluate grant applications.
Place: National Institutes of Health, 6701 Rockledge Drive, Bethesda, MD 20892, (Virtual Meeting).
Contact Person: George M Barnas, Ph.D., Scientific Review Officer, Center for Scientific Review, National Institutes of Health, 6701 Rockledge Drive, Room 4220, MSC 7818, Bethesda, MD 20892, 301–435–0696, *barnasg@csr.nih.gov.*

Name of Committee: Center for Scientific Review Special Emphasis Panel; PAR12–017: Shared Instrumentation: X–Ray.
Date: July 18–19, 2012.
Time: 7:00 a.m. to 5:00 p.m.
Agenda: To review and evaluate grant applications.
Place: National Institutes of Health, 6701 Rockledge Drive, Bethesda, MD 20892, (Virtual Meeting).
Contact Person: Kathryn M Koeller, Ph.D., Scientific Review Officer, Center for Scientific Review, National Institutes of Health, 6701 Rockledge Drive, Room 4166, MSC 7806, Bethesda, MD 20892, 301–435–2681, *koellerk@csr.nih.gov.*

Name of Committee: Center for Scientific Review Special Emphasis Panel; Small Business: Oral, Dental and Craniofacial Sciences.
Date: July 18–19, 2012.
Time: 8:00 a.m. to 5:00 p.m.
Agenda: To review and evaluate grant applications.
Place: National Institutes of Health, 6701 Rockledge Drive, Bethesda, MD 20892, (Virtual Meeting).
Contact Person: Yi-Hsin Liu, Ph.D., Scientific Review Officer, Center for Scientific Review, National Institutes of Health, 6701 Rockledge Drive, Room 4214, MSC 7814, Bethesda, MD 20892, 301–435–1781, *liuyh@csr.nih.gov.*

Name of Committee: Center for Scientific Review Special Emphasis Panel; Small Business: Dermatology, Rheumatology and Inflammation Special Emphasis Panel.
Date: July 18, 2012.
Time: 8:00 a.m. to 6:00 p.m.
Agenda: To review and evaluate grant applications.
Place: Bethesda North Marriott Hotel & Conference Center, 5701 Marinelli Road, Bethesda, MD 20852.
Contact Person: Aruna K Behera, Ph.D., Scientific Review Officer, Center for Scientific Review, National Institutes of Health, 6701 Rockledge Drive, Room 4211, MSC 7814, Bethesda, MD 20892, 301–435–6809, *beheraak@csr.nih.gov.*

Name of Committee: Center for Scientific Review Special Emphasis Panel; AREA (R15) Applications in Adult Language, Cognition, Psychopathology and Motor Function.
Date: July 18, 2012.
Time: 9:00 a.m. to 9:00 p.m.
Agenda: To review and evaluate grant applications.
Place: National Institutes of Health, 6701 Rockledge Drive, Bethesda, MD 20892, (Virtual Meeting).
Contact Person: Biao Tian, Ph.D., Scientific Review Officer, Center for Scientific Review, National Institutes of Health, 6701 Rockledge Drive, Room 3089B, MSC 7848, Bethesda, MD 20892, (301) 402–4411, *tianbi@csr.nih.gov.*

Name of Committee: Center for Scientific Review Special Emphasis Panel; Program Project: Computational Center for Multiscale Modeling of Biological Systems.
Date: July 18–20, 2012.
Time: 7:00 p.m. to 1:00 p.m.
Agenda: To review and evaluate grant applications.
Place: Hilton Garden Inn Pittsburgh University Place, 3454 Forbes Avenue, Pittsburgh,, PA 15213.
Contact Person: Raymond Jacobson, Ph.D., Scientific Review Officer, Center for Scientific Review, National Institutes of Health 6701 Rockledge Drive, Room 5858, MSC 7849, Bethesda, MD 20892, 301–996–7702, *jacobsonrh@csr.nih.gov.*

(Catalogue of Federal Domestic Assistance Program Nos. 93.306, Comparative Medicine; 93.333, Clinical Research, 93.306, 93.333, 93.337, 93.393–93.396, 93.837–93.844, 93.846–93.878, 93.892, 93.893, National Institutes of Health, HHS)

Dated: June 14, 2012.

Jennifer S. Spaeth,

Director, Office of Federal Advisory Committee Policy.

[FR Doc. 2012–15150 Filed 6–20–12; 8:45 am]

BILLING CODE 4140–01–P

DEPARTMENT OF HEALTH AND HUMAN SERVICES

National Institutes of Health

National Institute of Environmental Health Sciences; Notice of Closed Meetings

Pursuant to section 10(d) of the Federal Advisory Committee Act, as amended (5 U.S.C. App.), notice is hereby given of the following meetings.

The meetings will be closed to the public in accordance with the provisions set forth in sections 552b(c)(4) and 552b(c)(6), Title 5 U.S.C., as amended. The grant applications and the discussions could disclose confidential trade secrets or commercial property such as patentable material, and personal information concerning individuals associated with the grant applications, the disclosure of which would constitute a clearly unwarranted invasion of personal privacy.

Name of Committee: National Institute of Environmental Health Sciences Special Emphasis Panel; Support for Conferences and Scientific Meetings.
Date: July 17, 2012.
Time: 2:00 p.m. to 5:00 p.m.
Agenda: To review and evaluate grant applications.
Place: NIEHS/National Institutes of Health, Building 4401, East Campus, 79 T.W. Alexander Drive, Research Triangle Park, NC 27709, (Telephone Conference Call).
Contact Person: Leroy Worth, Ph.D., Scientific Review Officer, Scientific Review Branch, Division of Extramural Research and Training, Nat. Institute of Environmental Health Sciences, P.O. Box 12233, MD EC–30/Room 3171, Research Triangle Park, NC 27709, (919) 541–0670, *worth@niehs.nih.gov.*

Name of Committee: National Institute of Environmental Health Sciences Special Emphasis Panel; Career Development Awards Review.
Date: July 24, 2012.
Time: 12:00 p.m. to 5:00 p.m.
Agenda: To review and evaluate grant applications.
Place: NIEHS/National Institutes of Health, Key Stone Building, 530 Davis Drive, Research Triangle Park, NC 27709, (Telephone Conference Call).
Contact Person: Janice B Allen, Ph.D., Scientific Review Administrator, Scientific Review Branch, Division of Extramural Research and Training, Nat. Institute of Environmental Health Science, P.O. Box 12233, MD EC–30/Room 3170 B, Research Triangle Park, NC 27709, (919) 541–7556.

(Catalogue of Federal Domestic Assistance Program Nos. 93.115, Biometry and Risk Estimation—Health Risks from Environmental Exposures; 93.142, NIEHS Hazardous Waste Worker Health and Safety Training; 93.143, NIEHS Superfund Hazardous Substances—Basic Research and Education; 93.894, Resources and Manpower Development in the Environmental Health

Sciences; 93.113, Biological Response to Environmental Health Hazards; 93.114, Applied Toxicological Research and Testing, National Institutes of Health, HHS)

Dated: June 13, 2012.

Jennifer S. Spaeth,

Director, Office of Federal Advisory Committee Policy.

[FR Doc. 2012–15149 Filed 6–20–12; 8:45 am]

BILLING CODE 4140–01–P

DEPARTMENT OF HEALTH AND HUMAN SERVICES

National Institutes of Health

Eunice Kennedy Shriver National Institute of Child Health & Human Development; Notice of Meeting

Pursuant to section 10(a) of the Federal Advisory Committee Act, as amended (5 U.S.C. App.), notice is hereby given of a meeting of the National Children's Study Advisory Committee.

The meeting will be open to the public, with attendance limited to space available. Registration is required since space is limited and will begin at 8:00 a.m. Please visit the conference Web site for information on meeting logistics and to register for the meeting at *http://www.cvent.com/d/scqq9g.* Individuals who plan to attend and need special assistance, such as sign language interpretation or other reasonable accommodations, should notify the Contact Person listed below in advance of the meeting.

Name of Committee: National Children's Study Advisory Committee.

Date: July 24, 2012.

Time: 9:00 a.m. to 5:00 p.m.

Agenda: The NCS Advisory Committee will continue the discussion of the Main Study sampling design.

Place: National Institutes of Health, Natcher Building, 45 Center Drive, Bethesda, MD 20892.

Contact Person: Kate Winseck, MSW, Executive Secretary, National Children's Study, Eunice Kennedy Shriver National Institute of Child Health and Human Development, NIH, 6100 Executive Blvd., Room 5C01, Bethesda, MD 20892, (703) 902–1339, *ncs@circlesolutions.com.*

Any interested person may file written comments with the committee by forwarding the statement to the Contact Person listed on this notice. The statement should include the name, address, telephone number and when applicable, the business or professional affiliation of the interested person. For additional information about the Federal Advisory Committee meeting, please contact Circle Solutions at *ncs@circlesolutions.com.*

(Catalogue of Federal Domestic Assistance Program Nos. 93.864, Population Research; 93.865, Research for Mothers and Children; 93.929, Center for Medical Rehabilitation Research; 93.209, Contraception and Infertility Loan Repayment Program, National Institutes of Health, HHS)

Dated: June 12, 2012.

Jennifer S. Spaeth,

Director, Office of Federal Advisory Committee Policy.

[FR Doc. 2012–15148 Filed 6–20–12; 8:45 am]

BILLING CODE 4140–01–P

DEPARTMENT OF HEALTH AND HUMAN SERVICES

National Institutes of Health

Center For Scientific Review; Notice of Closed Meetings

Pursuant to section 10(d) of the Federal Advisory Committee Act, as amended (5 U.S.C. App.), notice is hereby given of the following meetings.

The meetings will be closed to the public in accordance with the provisions set forth in sections 552b(c)(4) and 552b(c)(6), Title 5 U.S.C., as amended. The grant applications and the discussions could disclose confidential trade secrets or commercial property such as patentable material, and personal information concerning individuals associated with the grant applications, the disclosure of which would constitute a clearly unwarranted invasion of personal privacy.

Name of Committee: Center for Scientific Review Special Emphasis Panel; Fellowships: Risk, Prevention and Health Behavior.

Date: July 16–17, 2012.

Time: 8:00 a.m. to 5:00 p.m.

Agenda: To review and evaluate grant applications.

Place: Embassy Suites at the Chevy Chase Pavilion, 4300 Military Road NW., Washington, DC 20015.

Contact Person: Martha M Faraday, Ph.D., Scientific Review Officer, Center for Scientific Review, National Institutes of Health, 6701 Rockledge Drive, Room 3110, MSC 7808, Bethesda, MD 20892, 301–435–3575, *faradaym@csr.nih.gov.*

Name of Committee: Center for Scientific Review Special Emphasis Panel; Fellowships: Physiology and Pathobiology of Cardiovascular and Respiratory Systems.

Date: July 16–17, 2012.

Time: 8:00 a.m. to 5:00 p.m.

Agenda: To review and evaluate grant applications and/or proposals.

Place: The Westin St. Francis San Francisco, 335 Powell Street, San Francisco, CA 94102.

Contact Person: Abdelouahab Aitouche, Ph.D., Scientific Review Officer, Center for Scientific Review, National Institutes of Health, 6701 Rockledge Drive, Room 4222, MSC 7812, Bethesda, MD 20892, 301–435–2365, *aitouchea@csr.nih.gov.*

Name of Committee: Center for Scientific Review Special Emphasis Panel; OD12–003: Small Business Alzheimer's Disease Research.

Date: July 16–17, 2012.

Time: 8:00 a.m. to 5:00 p.m.

Agenda: To review and evaluate grant applications.

Place: Marriott Baltimore Waterfront, 700 Aliceanna Street, Baltimore, MD 21202.

Contact Person: Joseph G Rudolph, Ph.D., Chief and Scientific Review Officer, Center for Scientific Review, National Institutes of Health, 6701 Rockledge Drive, Room 5186, MSC 7844, Bethesda, MD 20892, 301–408–9098, *josephru@csr.nih.gov.*

Name of Committee: Center for Scientific Review Special Emphasis Panel; Small Business Biological Chemistry, Biophyscis and Drug Discovery.

Date: July 16, 2012.

Time: 8:00 a.m. to 6:00 p.m.

Agenda: To review and evaluate grant applications.

Place: Renaissance Mayflower Hotel, 1127 Connecticut Avenue NW., Washington, DC 20036.

Contact Person: Dennis Hlasta, Ph.D., Scientific Review Officer, Center for Scientific Review, National Institutes of Health, 6701 Rockledge Drive, Room 6185, MSC, Bethesda, MD 20892, 301–435–1047, *dennis.hlasta@nih.gov.*

Name of Committee: Center for Scientific Review Special Emphasis Panel; Fellowship: Chemistry, Biochemistry, Biophysics, and Bioengineering.

Date: July 16–19, 2012.

Time: 9:00 a.m. to 4:00 p.m.

Agenda: To review and evaluate grant applications.

Place: National Institutes of Health, 6701 Rockledge Drive, Bethesda, MD 20892.

Contact Person: Ross D Shonat, Ph.D., Scientific Review Officer, Center for Scientific Review, National Institutes of Health, 6701 Rockledge Drive, Room 6172, MSC 7892, Bethesda, MD 20892, 301–435–2786, *ross.shonat@nih.hhs.gov.*

(Catalogue of Federal Domestic Assistance Program Nos. 93.306, Comparative Medicine; 93.333, Clinical Research, 93.306, 93.333, 93.337, 93.393–93.396, 93.837–93.844, 93.846–93.878, 93.892, 93.893, National Institutes of Health, HHS)

Dated: June 13, 2012.

Jennifer S. Spaeth,

Director, Office of Federal Advisory Committee Policy.

[FR Doc. 2012–15147 Filed 6–20–12; 8:45 am]

BILLING CODE 4140–01–P

DEPARTMENT OF HEALTH AND HUMAN SERVICES

National Institutes of Health

National Institute of General Medical Sciences; Notice of Closed Meeting

Pursuant to section 10(d) of the Federal Advisory Committee Act, as amended (5 U.S.C. App.), notice is hereby given of the following meeting.

The meeting will be closed to the public in accordance with the provisions set forth in sections 552b(c)(4) and 552b(c)(6), Title 5 U.S.C., as amended. The grant applications and the discussions could disclose confidential trade secrets or commercial property such as patentable material, and personal information concerning individuals associated with the grant applications, the disclosure of which would constitute a clearly unwarranted invasion of personal privacy.

Name of Committee: National Institute of General Medical Sciences Special Emphasis Panel Review of K99 Grant Applications.
Date: July 17, 2012.
Time: 8:00 a.m. to 5:00 p.m.
Agenda: To review and evaluate grant applications.
Place: Embassy Suites at the Chevy Chase Pavilion, 4300 Military Road NW., Washington, DC 20015.
Contact Person: John J. Laffan, Ph.D., Scientific Review Officer, Office of Scientific Review, National Institute of General Medical Sciences, National Institutes of Health, 45 Center Drive, Room 3An18J, Bethesda, MD 20892, 301–594–2773, *laffanjo@mail.nih.gov.*

(Catalogue of Federal Domestic Assistance Program Nos. 93.375, Minority Biomedical Research Support; 93.821, Cell Biology and Biophysics Research; 93.859, Pharmacology, Physiology, and Biological Chemistry Research; 93.862, Genetics and Developmental Biology Research; 93.88, Minority Access to Research Careers; 93.96, Special Minority Initiatives, National Institutes of Health, HHS)

Dated: June 15, 2012.

Jennifer S. Spaeth,

Director, Office of Federal Advisory Committee Policy.

[FR Doc. 2012–15217 Filed 6–20–12; 8:45 am]

BILLING CODE 4140–01–P

DEPARTMENT OF HEALTH AND HUMAN SERVICES

National Institutes of Health

Center for Scientific Review; Notice of Closed Meetings

Pursuant to section 10(d) of the Federal Advisory Committee Act, as amended (5 U.S.C. App.), notice is hereby given of the following meetings.

The meetings will be closed to the public in accordance with the provisions set forth in sections 552b(c)(4) and 552b(c)(6), Title 5 U.S.C., as amended. The grant applications and the discussions could disclose confidential trade secrets or commercial property such as patentable material, and personal information concerning individuals associated with the grant applications, the disclosure of which would constitute a clearly unwarranted invasion of personal privacy.

Name of Committee: Center for Scientific Review Special Emphasis Panel; Mentored Research Scientist Development Award in Metabolomics.
Time: July 9, 2012.
Date: 10:00 a.m. to 12:00 p.m.
Agenda: To review and evaluate grant applications.
Place: National Institutes of Health, 6701 Rockledge Drive, Bethesda, MD 20892, (Telephone Conference Call).
Contact Person: Allen Richon, Ph.D., Scientific Review Officer, Center for Scientific Review, National Institutes of Health, 6701 Rockledge Drive, Room 6184, MSC 7892, Bethesda, MD 20892, 301–435–1024, *allen.richon@nih.hhs.gov.*

Name of Committee: Center for Scientific Review Special Emphasis Panel; Program Project: Regulation of Magnesium Homeostasis.
Date: July 12–13, 2012.
Time: 8:00 a.m. to 8:00 p.m.
Agenda: To review and evaluate grant applications.
Place: National Institutes of Health, 6701 Rockledge Drive, Bethesda, MD 20892, (Virtual Meeting).
Contact Person: Michael H Chaitin, Ph.D., Scientific Review Officer, Center for Scientific Review, National Institutes of Health, 6701 Rockledge Drive, Room 5202, MSC 7850, Bethesda, MD 20892, (301) 435–0910, *chaitinm@csr.nih.gov.*

Name of Committee: Center for Scientific Review Special Emphasis Panel; AIDS and AIDS Related.
Date: July 13, 2012.
Time: 2:00 p.m. to 4:00 p.m.
Agenda: To review and evaluate grant applications.
Place: National Institutes of Health, 6701 Rockledge Drive, Bethesda, MD 20892, (Virtual Meeting).
Contact Person: Robert Freund, Ph.D., Scientific Review Officer, Center for Scientific Review, National Institutes of Health, 6701 Rockledge Drive, Room 5216, MSC 7852, Bethesda, MD 20892, 301–435–1050, *freundr@csr.nih.gov.*

Name of Committee: Center for Scientific Review Special Emphasis Panel; Population Sciences and Epidemiology R15 Applications.
Date: July 17, 2012.
Time: 2:00 p.m. to 5:00 p.m.
Agenda: To review and evaluate grant applications.
Place: National Institutes of Health, 6701 Rockledge Drive, Bethesda, MD 20892, (Telephone Conference Call).
Contact Person: George Vogler, Ph.D., Scientific Review Officer, PSE IRG, Center for Scientific Review, National Institutes of Health, 6701 Rockledge Drive, Room 3140, Bethesda, MD 20892, 301–435–0694, *voglergp@csr.nih.gov.*

Name of Committee: AIDS and Related Research Integrated Review Group; Behavioral and Social Consequences of HIV/AIDS Study Section.
Date: July 19–20, 2012.
Time: 8:00 a.m. to 5:00 p.m.
Agenda: To review and evaluate grant applications.
Place: St. Gregory Hotel, 2033 M Street NW., Washington, DC 20036.
Contact Person: Mark P Rubert, Ph.D., Scientific Review Officer, Center for Scientific Review, National Institutes of Health, 6701 Rockledge Drive, Room 5218, MSC 7852, Bethesda, MD 20892, 301–806–6596, *rubertm@csr.nih.gov.*

Name of Committee: Center for Scientific Review Special Emphasis Panel; Small Business: Non HIV Anti-Infective Therapeutics.
Date: July 19, 2012.
Time: 8:00 a.m. to 8:00 p.m.
Agenda: To review and evaluate grant applications.
Place: Hyatt Regency Bethesda, One Bethesda Metro Center, 7400 Wisconsin Avenue, Bethesda, MD 20814.
Contact Person: Kenneth M Izumi, Ph.D., Scientific Review Officer, Center for Scientific Review, National Institutes of Health, 6701 Rockledge, Rm 3204, MSC 7808, Bethesda, MD 20892, 301–496–6980, *izumikm@csr.nih.gov.*

*Name of Committee:*AIDS and Related Research Integrated Review Group; Behavioral and Social Science Approaches to Preventing HIV/AIDS Study Section.
Date: July 19–20, 2012.
Time: 8:00 a.m. to 5:00 p.m.
Agenda: To review and evaluate grant applications.
Place: St Gregory Hotel, 2033 M Street Northwest, Washington, DC 20036.
Contact Person: Jose H Guerrier, Ph.D., Scientific Review Officer, Center for Scientific Review, National Institutes of Health, 6701 Rockledge Drive, Room 5222, MSC 7852, Bethesda, MD 20892, 301–435–1137, *guerriej@csr.nih.gov.*

Name of Committee: AIDS and Related Research Integrated Review Group; NeuroAIDS and other End-Organ Diseases Study Section.
Date: July 19, 2012.
Time: 8:00 a.m. to 6:00 p.m.
Agenda: To review and evaluate grant applications.
Place: St. Regis Hotel, 923 16th and K Streets NW., Washington, DC 20006.
Contact Person: Eduardo A Montalvo, Ph.D., Scientific Review Officer, Center for Scientific Review, National Institutes of Health, 6701 Rockledge Drive, Room 5108, MSC 7852, Bethesda, MD 20892, (301) 435–1168, *montalve@csr.nih.gov.*

Name of Committee: Center for Scientific Review Special Emphasis Panel; Small Business: Biobehavioral and Behavioral Processes Across the Lifespan.
Date: July 19–20, 2012.
Time: 8:30 a.m. to 5:00 p.m.
Agenda: To review and evaluate grant applications.
Place: The Mandarin Oriental, 1330 Maryland Avenue SW., Washington, DC 20024.
Contact Person: Mark Lindner, Ph.D., Scientific Review Officer, Center for Scientific Review, National Institutes of Health, 6701 Rockledge Drive, Room 3182, MSC 7770, Bethesda, MD 20892, 301–435–0913, *mark.lindner@csr.nih.gov.*

Name of Committee: Center for Scientific Review Special Emphasis Panel; Member Conflict: HIV/AIDS Immune Response and Vaccines.

Date: July 19–20, 2012.

Time: 10:00 a.m. to 5:00 p.m.

Agenda: To review and evaluate grant applications.

Place: National Institutes of Health, 6701 Rockledge Drive, Bethesda, MD 20892, (Virtual Meeting).

Contact Person: Robert Freund, Ph.D., Scientific Review Officer, Center for Scientific Review, National Institutes of Health, 6701 Rockledge Drive, Room 5216, MSC 7852, Bethesda, MD 20892, 301–435–1050, *freundr@csr.nih.gov.*

Name of Committee: Center for Scientific Review Special Emphasis Panel; Small Business: Basic and Integrative Bioengineering.

Date: July 19, 2012.

Time: 11:00 a.m. to 6:00 p.m.

Agenda: To review and evaluate grant applications.

Place: General Services Administration Building, L''Enfant Plaza SW., Washington, DC 20024–2197.

Contact Person: David R. Filpula, Ph.D., Scientific Review Officer, Center for Scientific Review, National Institutes of Health, 6701 Rockledge Drive, Room 6181, MSC 7892, Bethesda, MD 20892, 301–435–2902, *filpuladr@mail.nih.gov.*

Name of Committee: Center for Scientific Review Special Emphasis Panel; Fellowship: Oncological Sciences.

Date: July 20–25, 2012.

Time: 9:00 a.m. to 4:00 p.m.

Agenda: To review and evaluate grant applications.

Place: National Institutes of Health, 6701 Rockledge Drive, Bethesda, MD 20892.

Contact Person: Ross D. Shonat, Ph.D., Scientific Review Officer, Center for Scientific Review, National Institutes of Health, 6701 Rockledge Drive, Room 5156, MSC 7849, Bethesda, MD 20892, 301–435–2786, *shonatr@csr.nih.gov.*

Name of Committee: Center for Scientific Review Special Emphasis Panel; Member Conflict: Thrombosis and Transplantation.

Date: July 20, 2012.

Time: 1:00 p.m. to 3:00 p.m.

Agenda: To review and evaluate grant applications.

Place: National Institutes of Health, 6701 Rockledge Drive, Bethesda, MD 20892, (Telephone Conference Call).

Contact Person: Luis Espinoza, Ph.D., Scientific Review Officer, Center for Scientific Review, National Institutes of Health, 6701 Rockledge Drive, Room 6183, MSC 7804, Bethesda, MD 20892, 301–495–1213, *espinozala@mail.nih.gov.*

Name of Committee: Center for Scientific Review Special Emphasis Panel; Member Conflict: Language and Communication.

Date: July 20, 2012.

Time: 2:00 p.m. to 4:30 p.m.

Agenda: To review and evaluate grant applications.

Place: National Institutes of Health, 6701 Rockledge Drive, Bethesda, MD 20892, (Telephone Conference Call).

Contact Person: Biao Tian, Ph.D., Scientific Review Officer, Center for Scientific Review, National Institutes of Health, 6701 Rockledge Drive, Room 3089B, MSC 7848, Bethesda, MD 20892, (301) 402–4411, *tianbi@csr.nih.gov.*

(Catalogue of Federal Domestic Assistance Program Nos. 93.306, Comparative Medicine; 93.333, Clinical Research, 93.306, 93.333, 93.337, 93.393–93.396, 93.837–93.844, 93.846–93.878, 93.892, 93.893, National Institutes of Health, HHS)

Dated: June 14, 2012.

Jennifer S. Spaeth,

Director, Office of Federal Advisory Committee Policy.

[FR Doc. 2012–15207 Filed 6–20–12; 8:45 am]

BILLING CODE 4140–01–P

DEPARTMENT OF HEALTH AND HUMAN SERVICES

Substance Abuse and Mental Health Services Administration

Agency Information Collection Activities: Proposed Collection; Comment Request

In compliance with Section 3506(c)(2)(A) of the Paperwork Reduction Act of 1995 concerning opportunity for public comment on proposed collections of information, the Substance Abuse and Mental Health Services Administration will publish periodic summaries of proposed projects. To request more information on the proposed projects or to obtain a copy of the information collection plans, call the SAMHSA Reports Clearance Officer on (240) 276–1243.

Comments are invited on: (a) Whether the proposed collections of information are necessary for the proper performance of the functions of the agency, including whether the information shall have practical utility; (b) the accuracy of the agency's estimate of the burden of the proposed collection of information; (c) ways to enhance the quality, utility, and clarity of the information to be collected; and (d) ways to minimize the burden of the collection of information on respondents, including through the use of automated collection techniques or other forms of information technology.

Proposed Project: Target Capacity Expansion Grants for Jail Diversion Programs—(OMB No. 0930–0277)—Revision

The Substance Abuse and Mental Health Services Administration's (SAMHSA), Center for Mental Health Services (CMHS) has implemented the Targeted Capacity Expansion Grants for Jail Diversion Programs, the Jail Diversion and Trauma Recovery Program represents the current cohort of grantees. The Program currently collects client outcome measures from program participants who agree to participate in the evaluation. Data collection consists of interviews conducted at baseline, six and twelve intervals, as well as the collection of data on participants from existing program records.

The current proposal requests the continuation of the data collection instruments previously approved by OMB. The only revision requested is a reduction in the respondent burden hours.

The following tables summarize the burden for the data collection.

CY 2013 ANNUAL REPORTING BURDEN

Data collection activity	Number of respondents	Responses per respondent	Total responses	Average hours per response	Total hour burden	Hourly rate	Total hour cost
Client Interviews for FY 2008, FY 2009, FY 2010							
Baseline at enrollment	462	1	462	0.95	439	$7.25	$3,182
6 months	370	1	369	0.92	340	7.25	2,465
12 months	313	1	313	0.92	288	7.25	2,090
Sub Total	*1,145*		*1,145*		*1,067*		*7,737*
Record Management by FY 2008, 2009, 2010 Grantee Staff:							
Events Tracking	13	500	6,500	0.03	195	15	2,925

CY 2013 ANNUAL REPORTING BURDEN—Continued

Data collection activity	Number of respondents	Responses per respondent	Total responses	Average hours per response	Total hour burden	Hourly rate	Total hour cost
Person Tracking	13	50	650	0.1	36	15	540
Service Use	13	50	650	0.17	110.5	15	1,658
Arrest History	13	50	650	0.17	110.5	15	1,658
Sub Total	*52*		*8,450*		*452*		*6,780*
FY 2008, FY 2009, and FY 2010 Grantees:							
Interview and Tracking data submission	13	12	48	0.17	8	25	200
Overall Total	*1,210*		*9,643*		*1,527*		*17,642*

CY 2014 ANNUAL REPORTING BURDEN

Data collection activity	Number of respondents	Responses per respondent	Total responses	Average hours per response	Total hour burden	Hourly rate	Total hour cost
Client Interviews for FY 2009 and 2010 Grantees							
Baseline (at enrollment)	293	1	293	0.83	243.19	$7.25	$1,763
6 months	234	1	234.4	0.92	215.648	7.25	1,563
12 months	253	1	253	0.92	232.76	7.25	1,688
Sub Total	*780.4*		*780.4*		*692*		*5,014*
Record Management by FY 2009 and FY 2010 Grantee Staff:							
Events Tracking	7	500	3,500	0.03	105	15	1,575
Person Tracking	7	50	350	0.1	36	15	540
Service Use	7	50	350	0.17	59.5	15	893
Arrest History	7	50	350	0.17	59.5	15	893
Sub Total	*28*		*4,550*		*260*		*3,900*
FY 2009 and FY 2010 Grantees:							
Interview and Tracking data submission	7	12	48	0.17	8	25	200
Overall Total	*815*		*5,378*		*960*		*9,114*

ANNUALIZED REPORTING BURDEN

Data collection activity	Annualized number of respondents	Annualized total responses	Annualized total hour burden
Baseline (at enrollment)	378	378	243
6 months	302	302	278
12 months	283	283	260
Events Tracking	10	5,000	150
Person Tracking	10	500	36
Service Use	10	500	85
Arrest History	10	500	85
Interview and Tracking Data Submission	10	48	8
Total Annualized	*1,013*	*7,511*	*1,146*

Send comments to Summer King, SAMHSA Reports Clearance Officer, Room 8–1099, One Choke Cherry Road, Rockville, MD 20857 *OR* email her a copy at *summer.king@samhsa.hhs.gov.* Written comments should be received within 60 days of this notice.

Summer King,

Statistician.

[FR Doc. 2012–15223 Filed 6–20–12; 8:45 am]

BILLING CODE 4162–20–P

DEPARTMENT OF HEALTH AND HUMAN SERVICES

Substance Abuse and Mental Health Services Administration

Agency Information Collection Activities: Proposed Collection; Comment Request

In compliance with Section 3506(c)(2)(A) of the Paperwork Reduction Act of 1995 concerning opportunity for public comment on proposed collections of information, the Substance Abuse and Mental Health Services Administration (SAMHSA) will publish periodic summaries of proposed projects. To request more information on the proposed projects or to obtain a copy of the information collection plans, call the SAMHSA Reports Clearance Officer at (240) 276–1243.

Comments are invited on: (a) Whether the proposed collections of information are necessary for the proper performance of the functions of the agency, including whether the information shall have practical utility; (b) the accuracy of the agency's estimate of the burden of the proposed collection of information; (c) ways to enhance the quality, utility, and clarity of the information to be collected; and (d) ways to minimize the burden of the collection of information on respondents, including through the use of automated collection techniques or other forms of information technology.

Proposed Project: Revision of Survey of State Underage Drinking Prevention Policies and Practices—Revision

The *Sober Truth on Preventing Underage Drinking Act* (the ''STOP Act'') [1] states that the ''Secretary [of Health and Human Services] shall * * * annually issue a report on each State's performance in enacting, enforcing, and creating laws, regulations, and programs to prevent or reduce underage drinking.'' The Secretary has delegated responsibility for this report to SAMHSA. Therefore, SAMHSA has developed a *Survey of State Underage Drinking Prevention Policies and Practices* (the ''*State Survey*'') to provide input for an *Annual Report on State Underage Drinking Prevention and Enforcement Activities* (the ''State Report'').

The STOP Act also requires the Secretary to develop ''a set of measures to be used in preparing the report on best practices'' and to consider categories including but not limited to the following:

Category #1: Sixteen specific underage drinking laws/regulations enacted at the State level (e.g., laws prohibiting sales to minors; laws related to minors in possession of alcohol);

Category #2: Enforcement and educational programs to promote compliance with these laws/regulations;

Category #3: Programs targeted to youths, parents, and caregivers to deter underage drinking and the number of individuals served by these programs;

Category #4: The amount that each State invests, per youth capita, on the prevention of underage drinking broken into five categories: (a) Compliance check programs in retail outlets; (b) Checkpoints and saturation patrols that include the goal of reducing and deterring underage drinking; (c) Community-based, school-based, and higher-education-based programs to prevent underage drinking; (d) Underage drinking prevention programs that target youth within the juvenile justice and child welfare systems; and (e) Any other State efforts or programs that target underage drinking.

Congress' purpose in mandating the collection of data on State policies and programs through the *State Survey i*s to provide policymakers and the public with currently unavailable but much needed information regarding State underage drinking prevention policies and programs. SAMHSA and other Federal agencies that have underage drinking prevention as part of their mandate will use the results of the *State Survey* to inform Federal programmatic priorities. The information gathered by the *State Survey* will also establish a resource for State agencies and the general public for assessing policies and programs in their own State and for becoming familiar with the programs, policies, and funding priorities of other States.

Because of the broad scope of data required by the STOP Act, SAMHSA relies on existing data sources where possible to minimize the survey burden on the States. SAMHSA uses data on State underage drinking policies from the National Institute of Alcohol Abuse and Alcoholism's Alcohol Policy Information System (APIS), an authoritative compendium of State alcohol-related laws. The APIS data is augmented by SAMHSA with original legal research on State laws and policies addressing underage drinking to include all of the STOP Act's requested laws and regulations (Category #1 of the four categories included in the STOP Act, as described above, page 2).

The STOP Act mandates that the *State Survey* assess ''best practices'' and emphasize the importance of building collaborations with Federally Recognized Tribal Governments (''Tribal Governments''). It also emphasizes the importance at the Federal level of promoting interagency collaboration and to that end established the Interagency Coordinating Committee on the Prevention of Underage Drinking (ICCPUD). SAMHSA has determined that to fulfill the Congressional intent, it is critical that the *State Survey* gather information from the States regarding the best practices standards that they apply to their underage drinking programs, collaborations between States and Tribal Governments, and the development of State-level interagency collaborations similar to ICCPUD.

SAMHSA has determined that data on Categories #2, #3, and #4 mandated in the STOP Act (as listed on page 2) (enforcement and educational programs; programs targeting youth, parents, and caregivers; and State expenditures) as well as States' best practices standards, collaborations with Tribal Governments, and State-level interagency collaborations *are not available from secondary sources* and therefore must be collected from the States themselves. The *State Survey* is therefore necessary to fulfill the Congressional mandate found in the STOP Act.

The *State Survey* is a single document that is divided into four sections, as follows:

(1) Enforcement of underage drinking prevention laws;

(2) Underage drinking prevention programs, including data on State best practices standards and collaborations with Tribal Governments;

(3) State interagency collaborations used to implement the above programs; and

(4) Estimates of the State funds invested in the categories specified in the STOP Act (see description of Category #4, above, page 2) and descriptions of any dedicated fees, taxes or fines used to raise these funds.

The number of questions in each Section is as follows:

[1] Public Law 109–422. It is assumed Congress intended to include the District of Columbia as part of the State Report.

Section 1: *31 questions.*
Section 2A: *18 questions.*[2]
Section 2B: *7 questions.*
Section 2C: *6 questions.*
Section 3: *12 questions.*
Section 4: *17 questions.*
Total: *91 questions.*

It is anticipated that respondents will actually respond to only a subset of this total. This is because the survey is designed with ''skip logic,'' which means that many questions will only be directed to a subset of respondents who report the existence of particular programs or activities.

This latest version of the survey has been revised slightly. While a few additional questions were added, a similar number of questions were deleted, so that the revised survey does not place any additional burden on States. All questions continue to ask only for readily available data.

The changes can be summarized as follows:

Part I

The revised version of the survey adds five sub-questions to Part I, which deals with enforcement. The sub-questions seek additional details about the information sought in the original questions. The data sought in the sub-questions are very similar to the data sought in the original questions and will likely be kept or stored in the same location by the same personnel, according to our interviews with respondents. Accordingly, answering these new sub-questions should require very little if any work on the part of respondents.

The question asking how local and State enforcement agencies coordinate their efforts to enforce underage drinking laws has been dropped.

A question has been added seeking an estimate of the number of retail licensees in the State, if readily available. This question was not asked in the previous version of the Survey, but it was determined that reliable data on the number of retail licensees is not available from another source.

Under the existing question regarding number of compliance checks/decoy operations conducted by the State alcohol law enforcement agency, two sub-questions have been added. One sub-question asks whether these compliance check/decoy operations are conducted at both on-sale and off-sale establishments, and the second sub-question asks whether the agency conducts random compliance check/decoy operation. If the answer is yes, the question asks for the number of licensees subject to random checks, and the number who failed.

Under the existing question asking for the total amount of fines imposed on retail establishments for furnishing alcohol to minors, a sub-question has been added requesting the dollar amounts of the smallest fine imposed and the largest fine imposed. Similarly, under the existing question asking for the total number of suspensions imposed on retail establishments for furnishing violations, a sub-question has been added asking the shortest and longest period of suspension, in days. These questions will help to establish the median for fines and days of suspension so as to provide a more accurate picture of enforcement efforts in the States.

Part II

In Part II, the question regarding ''specific'' underage drinking prevention programs and the question regarding ''related'' underage drinking prevention programs have been combined, and the references to ''specific'' and ''related'' have been eliminated. States no longer need to categorize their programs as one or the other and need only list their programs.

In the section asking for a description of each program, the existing survey asked for an estimate of how many youth, parents, and/or caregivers were served by the program. This section has been revised to ask whether the program is aimed at a specific, countable population, or the general population. For programs that are aimed at the general population, the question of how many youth, parents, and/or caregivers were served has been eliminated.

Also in the section asking for a description of each program, the existing survey asked for the time period for each program. This question has been eliminated.

The question on best practices has been clarified. A multiple choice answer has been added that asks for the source of the State's best practices standards: Federal agency(ies); State agency(ies); Non-governmental agency(ies), or Other [please describe].

To ensure that the *State Survey* obtains the necessary data while minimizing the burden on the States, SAMHSA has conducted a lengthy and comprehensive planning process. It has sought advice from key stakeholders (as mandated by the STOP Act) including hosting an all-day stakeholders meeting, conducting two field tests with State officials likely to be responsible for completing the *State Survey,* and investigating and testing various *State Survey* formats, online delivery systems, and data collection methodologies.

Based on these investigations, SAMHSA has decided to collect the required data using an electronic file distributed to States via email. The *State Survey* will be sent to each State Governor's office and the Office of the Mayor of the District of Columbia, for a total of 51 survey respondents. Based on the experience from the last two years of administering the *State Survey,* it is anticipated that the State Governors will designate staff from State agencies that have access to the requested data (typically State Alcohol Beverage Control [ABC] agencies and State Substance Abuse Program agencies). SAMHSA will provide both telephone and electronic technical support to State agency staff and will emphasize that the States are only expected to provide data that is readily available and are not required to provide data that has not already been collected. The burden estimate below takes into account these assumptions.

The estimated annual response burden to collect this information is as follows:

Instrument	Number of respondents	Responses/ respondent	Burden/ response (hrs)	Annual burden (hrs)
State Questionnaire	51	1	17.7	902.7

Send comments to Summer King, SAMHSA Reports Clearance Officer, Room 8–1099, One Choke Cherry Road, Rockville, MD 20857 *or* email a copy to *summer.king@samhsa.hhs.gov.* Written comments must be received before 60

[2] Note that the number of questions in Sections 2A is an estimate. This Section asks States to identify their programs that are *specific* to underage drinking prevention. For each program identified there are six follow-up questions. Based on feedback from stakeholders and pilot testers, it is anticipated that States will report an average of three programs for a total of 18 questions.

days after the date of the publication in the **Federal Register**.

Summer King,

Statistician.

[FR Doc. 2012–15220 Filed 6–20–12; 8:45 am]

BILLING CODE 4162–20–P

DEPARTMENT OF HOUSING AND URBAN DEVELOPMENT

[Docket No. FR–5602–N–02]

Notice of Proposed Information Collection: Comment Request; Accountability in the Provision of HUD Assistance ''Applicant/Recipient Disclosure/Update Report—HUD 2880''

AGENCY: Office of the General Counsel, HUD.

ACTION: Notice.

SUMMARY: The proposed information collection requirement described below will be submitted to the Office of Management and Budget (OMB) for review, as required by the Paperwork Reduction Act. The Department is soliciting public comments on the subject proposal.

DATES: *Comments Due Date:* August 20, 2012.

ADDRESSES: Interested persons are invited to submit comments regarding this proposal. Comments should refer to the proposal by name and/or OMB Control Number and should be sent to: Reports Liaison Officer, Office of General Counsel, Department of Housing and Urban Development, 451 7th Street SW., Room 10276, Washington, DC 20410–0500.

FOR FURTHER INFORMATION CONTACT: Lindsey Allen, Deputy Assistant General Counsel, Ethics Law Division, Office of General Counsel, Department of Housing and Urban Development, 451 7th Street SW., Room 2130, Washington, DC 20410–0500, telephone (202) 708–3815 (this is not a toll-free number). This form can be viewed or accessed at *http://www.hud.gov/utilities/intercept.cfm?/offices/adm/hudclips/forms/files/2880.pdf.*

SUPPLEMENTARY INFORMATION: The Department is submitting the proposed information collection to OMB for review, as required by the Paperwork Reduction Act of 1995 (44 U.S.C. chapter 35, as amended).

This notice is soliciting comments from members of the public and affecting agencies concerning the proposed collection of information to: (1) Evaluate whether the proposed collection of information is necessary for the proper performance of the functions of the agency, including whether the information will have practical utility; (2) Evaluate the accuracy of the agency's estimate of the burden of the proposed collection of information; (3) Enhance the quality, utility, and clarity of the information to be collected; and (4) Minimize the burden of the collection of information on those who are to respond; including through the use of appropriate automated collection techniques or other forms of information technology, e.g., permitting electronic submission of responses.

This Notice also lists the following information:

Title of Proposal: Accountability in the Provision of HUD Assistance ''Applicant/Recipient Disclosure/Update Report''.

OMB Control Number, if applicable: 2510–0011.

Description of the need for the information and proposed use: Section 102 of the Department of Housing and Urban Development Reform Act of 1989 (HUD Reform Act) requires the Department to ensure greater accountability and integrity in the provision of assistance administered by the Department. One feature of the statute requires certain disclosures by applicants seeking assistance from HUD, assistance from states and units of local government, and other assistance to be used with respect to the activities to be carried out with the assistance. The disclosure includes the financial interests of persons in the activities, and the sources of funds to be made available for the activities, and the proposed uses of the funds.

Each applicant that submits an application for assistance, within the jurisdiction of HUD, to a state or to a unit of general local government for a specific project or activity must disclose this information whenever the dollar threshold is met. This information must be kept updated during the application review process and while the assistance is being provided.

Agency form numbers, if applicable: HUD 2880.

Members of affected public: Applicants for HUD competitively funded assistance.

Estimation of the total numbers of hours needed to prepare theinformation collection including number of respondents, frequency of response, and hours of response: The form, HUD 2880, must be submitted as part of an applicant's application for competitively funded assistance.

Number of respondents	Burden hours	Frequency of response	Total burden hours
16,900	2.0	1.2	40,560

Status of the proposed information collection: Extension of a currently approved collection.

Authority: The Paperwork Reduction Act of 1995, 44 U.S.C. chapter 35, as amended.

Dated: June 15, 2012.

Camille Acevedo,

Associate General Counsel for Legislation and Regulations.

[FR Doc. 2012–15205 Filed 6–20–12; 8:45 am]

BILLING CODE 4210–67–P

DEPARTMENT OF THE INTERIOR

Bureau of Safety and Environmental Enforcement

[Docket ID BSEE–2012–0012; OMB Control Number 1014–0013]

BSEE Information Collection Activity: Global Positioning System for MODUs, Extension of a Collection; Comment Request

ACTION: 60-day Notice.

SUMMARY: To comply with the Paperwork Reduction Act of 1995 (PRA), BSEE is inviting comments on a collection of information pertaining to the NTL discussed below. We will submit this request to the Office of Management and Budget (OMB) for review and approval. The current OMB approval of the information collection in this NTL expires in January 2013, and concerns global positioning systems on Mobile Offshore Drilling Units (MODUs). After a major weather event, like a hurricane, lessees and operators need to report new GPS information to BSEE until all MODUs are determined to be safe.

DATES: Submit written comments by August 20, 2012.

ADDRESSES: You may submit comments by either of the following methods listed below.

• *Electronically:* Go to *http://www.regulations.gov.* In the entry titled Enter Keyword or ID, enter BSEE–2012–0012 then click search. Follow the instructions to submit public comments and view all related materials. We will post all comments.

• Email *cheryl.blundon@bsee.gov.* Mail or hand-carry comments to the Department of the Interior; Bureau of Safety and Environmental Enforcement; Regulations Development Branch; Attention: Cheryl Blundon; 381 Elden Street, HE–3317; Herndon, Virginia 20170–4817. Please reference ICR 1014–0013 in your comment and include your name and return address.

FOR FURTHER INFORMATION CONTACT: Cheryl Blundon, Regulations Development Branch at (703) 787–1607 to request additional information about this ICR.

SUPPLEMENTARY INFORMATION:

Title: 30 CFR 250, Subpart A, General, GPS (Global Positioning System) for MODUs NTL.

OMB Control Number: 1014–0013.

Abstract: The Outer Continental Shelf (OCS) Lands Act, as amended (43 U.S.C. 1331 *et seq.* and 43 U.S.C. 1801 *et seq.*), authorizes the Secretary of the Interior (Secretary) to prescribe rules and regulations to administer leasing of the OCS. Such rules and regulations will apply to all operations conducted under a lease. Operations on the OCS must preserve, protect, and develop oil and natural gas resources in a manner that is consistent with the need to make such resources available to meet the Nation's energy needs as rapidly as possible; to balance orderly energy resource development with protection of human, marine, and coastal environments; to ensure the public a fair and equitable return on the resources of the OCS; preserve and maintain free enterprise competition; and ensure that the extent of oil and natural gas resources of the OCS is assessed at the earliest practicable time. Section 43 U.S.C. 1332(6) states that ''operations in the outer Continental Shelf should be conducted in a safe manner by well-trained personnel using technology, precautions, and techniques sufficient to prevent or minimize the likelihood of blowouts, loss of well control, fires, spillages, physical obstruction to other users of the waters or subsoil and seabed, or other occurrences which may cause damage to the environment or to property, or endanger life or health.''

To carry out these responsibilities, the BSEE issues regulations to ensure that operations in the OCS will meet statutory requirements; provide for safety and protect the environment; and result in diligent exploration, development, and production of OCS leases. In addition, we also issue Notice to Lessees (NTLs) that provide clarification, explanation, and interpretation of our regulations. These NTLs are used to convey purely informational material and to cover situations that might not be adequately addressed in our regulations.

Regulations at 30 CFR part 250 implement these statutory requirements. We use the information for BSEE to assess the whereabouts of any facility becoming unmoored due to extreme weather situations; as well as, to follow the path of that facility to determine if other facilities/pipelines, etc., were damaged in any way. The offshore oil and gas industry will use the information to determine the safest and quickest way to either remove the obstacles or to fix and reuse them.

We will protect information from respondents considered proprietary under the Freedom of Information Act (5 U.S.C. 552) and its implementing regulations (43 CFR part 2) and under regulations at 30 CFR 250.197, *Data and information to be made available to the public or for limited inspection.* No items of a sensitive nature are collected. Responses are mandatory.

Frequency: On occasion.

Description of Respondents: Potential respondents comprise Federal oil, gas, or sulphur lessees and/or operators.

Estimated Reporting and Recordkeeping Hour Burden: The currently approved annual reporting burden for this collection is 9 hours and the non-hour cost burden is $150,000. The following chart details the individual components and respective hour burden estimates of this ICR. In calculating the burdens, we assumed that respondents perform certain requirements in the normal course of their activities. We consider these to be usual and customary and took that into account in estimating the burden.

BURDEN TABLE

NTL—GPS for MODUs	Hour burden	Average number of annual responses	Annual burden hours
	Non-hour cost burdens		
1—Notify BSEE with tracking/locator data access; purchase and install tracking/locator devices—(these are future MODUs/submissions after initial purchase and notification in subsequent years).	15 mins	30 devices	8 (rounded)
	30 devices per year for replacement and/or new × $5,000 = $150,000		
2—Notify Hurricane Response Team as soon as operator is aware a rig has moved off location.	10 mins	6 notifications ...	1

Estimated Reporting and Recordkeeping Non-Hour Cost Burden: We have identified one non-hour cost burden for this collection; see the burden table.

Public Disclosure Statement: The PRA (44 U.S.C. 3501, *et seq.*) provides that an agency may not conduct or sponsor a collection of information unless it displays a currently valid OMB control number. Until OMB approves a collection of information, you are not obligated to respond.

Comments: Before submitting an ICR to OMB, PRA section 3506(c)(2)(A) requires each agency ''* * * to provide notice * * * and otherwise consult with members of the public and affected agencies concerning each proposed collection of information * * *''. Agencies must specifically solicit comments to: (a) Evaluate whether the collection is necessary or useful; (b) evaluate the accuracy of the burden of the proposed collection of information; (c) enhance the quality, usefulness, and clarity of the information to be

collected; and (d) minimize the burden on the respondents, including the use of technology.

Agencies must also estimate the non-hour paperwork cost burdens to respondents or recordkeepers resulting from the collection of information. Therefore, if you have other than hour burden costs to generate, maintain, and disclose this information, you should comment and provide your total capital and startup cost components or annual operation, maintenance, and purchase of service components. For further information on this burden, refer to 5 CFR 1320.3(b)(1) and (2), or contact the Bureau representative listed previously in this notice.

We will summarize written responses to this notice and address them in our submission for OMB approval. As a result of your comments, we will make any necessary adjustments to the burden in our submission to OMB.

Public Comment Procedures: Before including your address, phone number, email address, or other personal identifying information in your comment, you should be aware that your entire comment—including your personal identifying information—may be made publicly available at any time. While you can ask us in your comment to withhold your personal identifying information from public review, we cannot guarantee that we will be able to do so.

Dated: June 14, 2012.

Robert W. Middleton,

Deputy Chief, Office of Offshore Regulatory Programs.

[FR Doc. 2012–15218 Filed 6–20–12; 8:45 am]

BILLING CODE 4310–VH–P

DEPARTMENT OF THE INTERIOR

Fish and Wildlife Service

[FWS–R3–ES–2012–N101; FXHC113003000005B–123–FF03E00000]

Final Springfield Plateau Regional Restoration Plan and Environmental Assessment and Finding of No Significant Impact (FONSI)

AGENCY: Fish and Wildlife Service, Interior.

ACTION: Notice of availability.

SUMMARY: This notice advises the public and other agencies of the availability of the Final Springfield Plateau Regional Restoration Plan (Plan) and Environmental Assessment and Finding of No Significant Impact (FONSI). The U.S. Department of the Interior (DOI), acting through the U.S. Fish and Wildlife Service (FWS), and the State of Missouri, acting through the Missouri Department of Natural Resources (MDNR), formally selected Alternative D of the Plan through signing of the FONSI. Alternative D provides for natural resource—based restoration using a tiered project selection process evaluating the feasibility of primary restoration, compensatory restoration, and acquisition of equivalent resources. Interested members of the public are invited to review the Plan.

ADDRESSES: The Plan can be viewed online at *http://www.fws.gov/midwest/nrda/motristate/* or *http://www.dnr.mo.gov/env/hwp/sfund/nrda.htm.*

Alternatively, copies of the Plan can be requested from John Weber, Restoration Coordinator, U.S. Fish and Wildlife Service, 101 Park DeVille Dr., Suite A, Columbia, MO 65203, or Tim Rielly, Assessment and Restoration Manager, Missouri Department of Natural Resources, P.O. Box 176, Jefferson City, MO 65102–0176.

You may also submit requests for copies of the Plan by sending electronic mail (email) to: *John_S_Weber@fws.gov or tim.rielly@dnr.mo.gov.*

FOR FURTHER INFORMATION CONTACT: John Weber, (573) 234–2132 (x177), or Tim Rielly, (573) 526–3353.

SUPPLEMENTARY INFORMATION:

Background

The FWS and the MDNR (Trustees) are trustees for natural resources considered in this restoration plan, pursuant to subpart G of the National Oil and Hazardous Substances Pollution Contingency Plan (40 CFR 300.600 and 300.610) and Executive Order 12580. The *Memorandum of Understanding Between the Missouri Department of Natural Resources and U.S. Department of the Interior* establishes a Trustee Council charged with developing and implementing a restoration plan for ecological restoration in the Springfield Plateau of southwest Missouri.

The Trustees followed the NRDAR regulations found at 43 CFR part 11 for the development of the Plan. The objective of the NRDAR process is to compensate the public for losses to natural resources that have been injured by releases of hazardous substances into the environment. The Comprehensive Environmental Response, Compensation, and Liability Act (CERCLA, more commonly known as the Federal ''Superfund'' law) (42 U.S.C. 9601 *et seq.*) and the Federal Water Pollution Control Act (commonly known as the Clean Water Act (CWA)) (33 U.S.C. 1251 *et seq.*) authorize States, federally recognized tribes, and certain Federal agencies that have authority for natural resources ''belonging to, managed by, controlled by or appertaining to [the public]'' to act as ''trustees'' on behalf of the public, to restore, rehabilitate, replace, and/or acquire natural resources equivalent to those injured by releases of hazardous substances.

The Trustees have worked together to determine appropriate restoration activities to address natural resource injuries caused by the release of hazardous substances into the Springfield Plateau environment. The results of this administrative process are contained in a series of planning and decision documents that have been published for public review under CERCLA. On January 11, 2012, the FWS published in the **Federal Register** a notice of availability commencing a 45-day public comment period on the Draft Springfield Plateau Regional Restoration Plan and Environmental Assessment (77 FR 1717). The public comment period ended on February 27, 2012. Comments received during the public comment period were incorporated into our final document.

Current Notice of Availability

This current notice of availability informs the public that the Trustees have formally selected Alternative D of The Plan through the signing of a Finding of No Significant Impact (FONSI). The FONSI indicates that restoring, replacing and/or acquiring the equivalent of injured resources in the Springfield Plateau as described under Alternative D in the Final Springfield Plateau Regional Restoration Plan (Plan) and Environmental Assessment is not a major Federal action which would significantly affect the quality of the human environment within the meaning of Section 102(2)(c) of the National Environmental Policy Act of 1969.

Authority

This notice is provided pursuant to Natural Resource Damage Assessment and Restoration (NRDAR) regulations (43 CFR 11.81(d)(4)) and NEPA (National Environmental Policy Act) regulations (40 CFR 1506.6).

Dated: May 29, 2012.

Thomas O Melius,

Regional Director, Midwest Region, Bloomington, Minnesota.

[FR Doc. 2012–15184 Filed 6–20–12; 8:45 am]

BILLING CODE 4310–55–P

DEPARTMENT OF THE INTERIOR

Fish and Wildlife Service

[FWS–R9–IA–2011–0087; 96300–1671–0000 FY12 R4]

Conference of the Parties to the Convention on International Trade in Endangered Species of Wild Fauna and Flora (CITES); Sixteenth Regular Meeting: Proposed Resolutions, Decisions, and Agenda Items Being Considered; Observer Information

AGENCY: Fish and Wildlife Service, Interior.

ACTION: Notice.

SUMMARY: The United States, as a Party to the Convention on International Trade in Endangered Species of Wild Fauna and Flora (CITES), may submit proposed resolutions, decisions, and agenda items for consideration at meetings of the Conference of the Parties to CITES. The United States may also propose amendments to the CITES Appendices for consideration at meetings of the Conference of the Parties. The sixteenth regular meeting of the Conference of the Parties to CITES (CoP16) is scheduled to be held in Bangkok, Thailand, March 3–15, 2013. With this notice, we describe proposed resolutions, decisions, and agenda items that the United States is considering submitting for consideration at CoP16; invite your comments and information on these proposals; and provide information on how non-governmental organizations based in the United States can attend CoP16 as observers.

DATES: We will consider written information and comments you submit concerning proposed resolutions, decisions, and agenda items that the United States is considering submitting for consideration at CoP16, if we receive them by August 20, 2012.

ADDRESSES: You may submit comments pertaining to proposed resolutions, decisions, and agenda items for discussion at CoP16 by one of the following methods:

- *Federal eRulemaking Portal: http://www.regulations.gov*. Follow the instructions for submitting comments on Docket No. FWS–R9–IA–2011–0087.
- *U.S. mail or hand-delivery:* Public Comments Processing, *Attn:* FWS–R9–IA–2011–0087; Division of Policy and Directives Management; U.S. Fish and Wildlife Service; 4401 N. Fairfax Drive, MS 2042–PDM; Arlington, VA 22203.

We will not consider comments sent by email or fax, or to an address not listed in the **ADDRESSES** section. Comments and materials we receive in response to this notice will be posted for public inspection on *http://www.regulations.gov,* and will be available by appointment, between 8:00 a.m. and 4:00 p.m., Monday through Friday, except Federal holidays, at the U.S. Fish and Wildlife Service, Division of Management Authority, 4401 N. Fairfax Drive, Room 212, Arlington, VA 22203; telephone 703–358–2095.

Requests for approval to attend CoP16 as an observer should be sent to the Division of Management Authority, U.S. Fish and Wildlife Service, 4401 North Fairfax Drive, Room 212, Arlington, VA 22203, or via email at: *managementauthority@fws.gov,* or via fax at: 703–358–2298.

For the latest news and information regarding U.S. preparations for CoP16, please visit our Web site at *http://www.fws.gov/international/CITES/CoP16.html*.

FOR FURTHER INFORMATION CONTACT: For information pertaining to resolutions, decisions, and agenda items, contact: Robert R. Gabel, Chief, Division of Management Authority; telephone 703–358–2095; facsimile 703–358–2298. For information pertaining to species proposals contact: Rosemarie Gnam, Chief, Division of Scientific Authority; telephone 703–358–1708; facsimile 703–358–2276. If you use a telecommunications device for the deaf (TDD), call the Federal Information Relay Service (FIRS) at 800–877–8339.

SUPPLEMENTARY INFORMATION:

Background

The Convention on International Trade in Endangered Species of Wild Fauna and Flora, hereinafter referred to as CITES or the Convention, is an international treaty designed to control and regulate international trade in certain animal and plant species that are now or potentially may become threatened with extinction. These species are listed in Appendices to CITES, which are available on the CITES Secretariat's Web site at *http://www.cites.org/eng/app/index.php*. Currently, 175 countries, including the United States, are Parties to CITES. The Convention calls for regular biennial meetings of the Conference of the Parties, unless the Conference of the Parties decides otherwise. At these meetings, the Parties review the implementation of CITES, make provisions enabling the CITES Secretariat in Switzerland to carry out its functions, consider amendments to the lists of species in Appendices I and II, consider reports presented by the Secretariat, and make recommendations for the improved effectiveness of CITES. Any country that is a Party to CITES may propose amendments to Appendices I and II, resolutions, decisions, and agenda items for consideration by all the Parties at the meetings.

This is our fourth in a series of **Federal Register** notices that, together with an announced public meeting, provide you with an opportunity to participate in the development of the U.S. submissions to and negotiating positions for the sixteenth regular meeting of the Conference of the Parties to CITES (CoP16). We published our first CoP16-related **Federal Register** notice on June 14, 2011 (76 FR 34746), in which we requested information and recommendations on species proposals for the United States to consider submitting for consideration at CoP16, and described our approach in determining which species proposals to consider submitting. We published our second such **Federal Register** notice on November 7, 2011 (76 FR 68778), in which we requested information and recommendations on proposed resolutions, decisions, and agenda items for the United States to consider submitting for consideration at CoP16, described our approach in determining which proposed resolutions, decisions, and agenda items to consider submitting, and provided preliminary information on how to request approved observer status for non-governmental organizations that wish to attend the meeting. In our third CoP16-related **Federal Register** notice, published on April 11, 2012 (77 FR 21798), we requested public comments and information on species proposals that the United States is considering submitting for consideration at CoP16. A complete list of those **Federal Register** notices, along with information on U.S. preparations for CoP16, can be found at *http://www.fws.gov/international/CITES/CoP16.html*. You may obtain additional information on those **Federal Register** notices from the following sources: For information on proposed resolutions, decisions, and agenda items, contact the Division of Management Authority at the address provided in the **ADDRESSES** section; and for information on species proposals, contact the Division of Scientific Authority, U.S. Fish and Wildlife Service, 4401 N. Fairfax Drive, Room 110, Arlington, VA 22203. Our regulations governing this public process are found in 50 CFR 23.87.

Recommendations for Resolutions, Decisions, and Agenda Items for the United States To Consider Submitting for CoP16

In our **Federal Register** notice published on November 7, 2011 (76 FR 68778), we requested information and recommendations on potential resolutions, decisions, and agenda items for the United States to submit for consideration at CoP16. We received information and recommendations from the following organizations: The Animal Welfare Institute; Gruhn Guitars, Inc.; the International Fund for Animal Welfare; NAMM (the International Music Products Association); the Natural Science Collections Alliance; the Ornithological Council and the Society for the Preservation of Natural History Collections; Safari Club International and the Safari Club International Foundation; the Species Survival Network; the Species Survival Network's Amphibian Working Group; and the World Wildlife Fund. We also received comments from three individuals.

We considered all of the recommendations of the above individuals and organizations, as well as the factors described in the U.S. approach for CoP16 discussed in our November 7, 2011, **Federal Register** notice, when compiling a list of resolutions, decisions, and agenda items that the United States is likely to submit for consideration by the Parties at CoP16. We also compiled lists of resolutions, decisions, and agenda items for consideration at CoP16 that the United States either is currently undecided about submitting, is not considering submitting at this time, or plans to address in other ways. In compiling these lists, we also considered potential submissions that we developed internally. The United States may consider submitting documents for some of the issues for which it is currently undecided or not considering submitting at this time, depending on the outcome of discussions of these issues in the CITES Standing Committee, additional consultations with range country governments and subject matter experts, or comments we receive during the public comment period for this notice.

Please note that, in sections A, B, and C below, we have listed those resolutions, decisions, and agenda items that the United States is likely to submit, currently undecided about submitting, or currently planning not to submit. We have posted an extended version of this notice on our Web site at *http://www.fws.gov/international/CITES/CoP16.html* and at *http://www.regulations.gov,* with text describing in more detail each of these issues and explaining the rationale for the tentative U.S. position on each issue. Copies of the extended version of the notice are also available from the Division of Management Authority at the address in the **ADDRESSES** section.

We welcome your comments and information regarding the resolutions, decisions, and agenda items that the United States is likely to submit, currently undecided about submitting, or currently planning not to submit.

A. What resolutions, decisions, and agenda items is the United States likely to submit for consideration at CoP16?

1. Quota information on CITES permits and tags for leopard trophies: Proposal we developed internally to revise Resolution Conf. 10.14 (Rev. CoP14), *Quotas for leopard trophies and skins for personal use,* and Resolution Conf. 12.3 (Rev. CoP15), *Permits and certificates,* to make them consistent with respect to what quota/quantity information should be included on a leopard trophy tag and on the accompanying CITES permit.

2. Retrospective permit process for certain Appendix-I specimens: Proposal we developed internally to revise Resolution Conf. 12.3 (Rev. CoP15), *Permits and certificates,* to include a retrospective permit process for certain Appendix-I specimens with high conservation value.

3. Streamlined process for cross-border transport of musical instruments containing CITES species: Proposal for a passport system for individuals travelling internationally with their musical instruments.

B. On what resolutions, decisions, and agenda items is the United States still undecided, pending additional information and consultations?

1. CoP Rules of Procedure: Voting records: Proposal to revise the Rules of Procedure for meetings of the CoP to require that, except in the case of a vote on a proposal by a secret ballot, electronic votes be displayed to all CoP participants within minutes of the vote and the Presiding Officer not announce the results of the vote until votes are displayed and Parties have had time to verify them.

2. CoP Rules of Procedure: Secret ballots: Competing proposals regarding whether to revise the Rules of Procedure for CoPs, aligning them with those of other United Nations bodies to allow a secret ballot vote only when the motion for the vote has been approved by a majority of Parties present and voting (rather than by merely 10 Parties as is currently the requirement in the CoP Rules of Procedure).

3. Climate change: Proposal for a resolution on climate change that would allow for increased recognition of climate change and its impacts or potential impacts on CITES-listed species.

4. National CITES laws made available on the web: Proposal for a resolution or decision calling on the Secretariat to post all Party CITES implementing laws on the CITES Web site.

5. CITES purpose codes: Comment supporting the position that purpose codes should be used primarily to indicate whether the trade covered by a particular permit is for commercial or noncommercial purposes, while allowing for the use of purpose codes to gather useful analytical information (such as the number and variety of hunting trophies being shipped); also supporting the position that purpose codes are not to be used as enforcement tools unless this is accompanied by a willingness to resolve issues with coding between Management Authorities and not putting the burden on the shippers in the absence of evidence of fraudulent intent.

6. Equipment needs of Parties: Proposal for a resolution or decision to authorize the development of a mechanism to identify equipment needs of the CITES Parties for the effective enforcement of the Convention, while allowing CITES observers and other interested organizations and agencies an opportunity to try to meet those Party needs.

7. Review of Significant Trade: Proposal to amend the Terms of Reference for the evaluation of the Review of Significant Trade to include assessment of the ''measures to be taken regarding the implementation of recommendations'' contained in Resolution Conf. 12.8 (Rev. CoP13), *Review of Significant Trade in specimens of Appendix-II species.*

8. Non-detriment findings: (a) Proposal for a resolution to substantively improve and strengthen the non-detriment finding (NDF) requirements; (b) comment supporting the CITES NDF Working Group, a joint working group of the Animals and Plants Committees, and the fact that the Working Group is currently considering a draft resolution on NDFs for CoP16, and recommending that the United States lend its support to the process to ensure that such a resolution is adopted at CoP16; and (c) proposal for the development of guidance for making NDFs, provided that such guidance is

not mandatory, does not suggest ''pass or fail'' criteria for permit issuance based on such findings, and is accompanied by a mechanism to assess range States' needs for capacity-building to improve NDFs and to provide such capacity-building assistance.

9. Captive-bred and ranched specimens: Proposal for a decision to continue the intersessional Working Group on Implementation of the Convention Relating to Captive-bred and Ranched Specimens and a decision directing that the Working Group study problems with the use of CITES source codes by selecting species and Parties to be addressed as case studies.

10. Definitions of sawn wood and veneer for Appendix-II and -III timber: Proposal that CITES develop clearer definitions of the terms ''sawn wood'' and ''veneer,'' which appear in the annotations for a number of timber species listed in Appendices II and III.

11. Trade in hunting trophies of Appendix-I species: Proposal for revisions to relevant resolutions to: (a) incorporate criteria that must be met before quotas for Appendix-I species are approved; (b) require that such quotas be reviewed and renewed at each CoP; (c) require that quotas in place be regularly monitored to ensure that the basis for assigning them remains valid; and (d) remove the presumptions placed on the importing country that quotas may be accepted as appropriate in the absence of direct evidence to the contrary.

12. Hunting trophy personal effects: Comment supporting the view that hunting trophies that include manufactured items crafted from animals taken by hunters are by their very nature personal effects and qualify for the CITES personal effects and household effects exemption, and supporting revising Resolution Conf. 13.7 (Rev. CoP14), *Control of trade in personal and household effects,* to remove the requirement that a hunting trophy must be carried by the hunter as accompanying baggage in order to qualify as a personal effect.

13. Asian big cats: Proposal for several actions to strengthen enforcement of CITES with regard to Appendix-I Asian big cat species.

14. Tiger farming and domestic trade: Recommendation that the United States call for the full implementation of the spirit and letter of Decision 14.69, directing Parties with operations breeding tigers on a commercial scale to implement measures to restrict the captive population to a level supportive only of conserving wild tigers, and proposal to revise Resolution Conf. 12.5 (Rev. CoP15) to support the Standing Committee call for ''such measures as are required to halt the illegal trade in tigers and tiger parts and derivatives.''

15. Illegal trade in specimens of Appendix-I bear species: Proposal to revise Resolution Conf. 10.8 (Rev. CoP14), *Conservation of and trade in bears,* and/or submit decisions to establish a process by which range and consumer States that are identified in the new report of TRAFFIC Southeast Asia on illegal trade in Asian bear species as being involved in illegal trade in Appendix-I bear species must report to the Standing Committee on progress made to address the problems identified in the report.

16. Rhinoceroses: Enforcement pertaining to trade in products: Comment supporting strict enforcement of CITES controls on trade in rhinoceros products, without unnecessary limitations on the legitimate hunting of rhinoceroses.

17. Rhinoceroses: Export of horn for commercial purposes: Recommendation that the United States take all action within its power to carefully scrutinize trade in rhinoceros parts to ensure that parts originating in the United States do not enter Traditional Chinese Medicine markets in East Asia and that the United States make recommendations to the Standing Committee and to CoP16 that all CITES Parties take similar action.

18. Rhinoceroses: Definition of ''appropriate and acceptable'' in the annotation to the Appendix-II listing of the South African population of the white rhinoceros: Proposal for adding a safeguard in the annotation to the Appendix-II listing of the South African population of the white rhinoceros (*Ceratotherium simum simum*) to ensure that, if exports of live rhinoceroses from any Party are to be authorized in the future, they should be exclusively to *in-situ* conservation programs.

19. Reporting on rhinoceros issues (Resolution Conf. 9.14 (Rev. CoP15)): Proposal that all CITES Parties include the following information in the data they provide for the annual reports by IUCN/TRAFFIC as requested in Resolution Conf. 9.14 (Rev. CoP15), *Conservation of and trade in African and Asian rhinoceroses:* The locations, domestic transfer, and the births and deaths of all live rhinoceroses that have been subject to international trade.

20. Pangolins: Proposal for a decision and resolution recommending a number of actions to strengthen enforcement of CITES with regard to Asian pangolins.

21. Elephants: Panel of Experts: Proposal for a revision of Resolution Conf. 10.9, *Consideration of proposals for the transfer of African elephant populations from Appendix I to Appendix II,* to establish a standing Panel of Experts to ensure that the Panel can be convened and deployed in a timely fashion as soon as a proposal to transfer a population of the African elephant from Appendix I to Appendix II is received by the Secretariat, and to include a deadline for the Secretariat to forward submitted proposals to the Panel.

22. Elephants: Ivory-trading partners: Proposal to recommend a regular comprehensive review of the status of all CITES-approved ivory-trading partners by an independent consultant in order to determine whether there is a need for their trading partner status to be amended or revoked, and recommending that trading partner status should not exceed a defined period of time.

23. Monitoring the Illegal Killing of Elephants (MIKE): Proposal to direct the Standing Committee to: Commission a full independent review of MIKE; develop recommendations on the future and improvement of MIKE; and develop recommendations to ensure regular monitoring of the MIKE program by the Standing Committee.

C. What resolutions, decisions, and agenda items is the United States not likely to submit for consideration at CoP16, unless we receive significant additional information?

1. Streamlined process for trade in pre-CITES, pre-ESA, and pre-Lacey Act specimens: Proposal that businesses engaged in trade in parts and derivatives of species listed under CITES, the Endangered Species Act (ESA), or the Lacey Act be licensed and that trade in pre-CITES, pre-ESA, and pre-Lacey Act parts and derivatives be allowed with a simple declaration of this on the commercial invoice (no permit), and that all personal items in international trade receive an automatic exemption from CITES, ESA, and Lacey Act.

2. Financing and budgeting of the Secretariat: Proposal that, when reporting on its expenditures and on its projected Costed Program of Work, the Secretariat report on costs per project and method of implementation, provide a separate chart on staff costs to allow Parties to better evaluate work priorities for Secretariat staff, provide a list of meetings attended by Secretariat staff and associated costs, and provide feedback on which activities/methods of implementation have been completed and whether core and high-priority activities have received precedence over medium- and low-priority activities. The proposal also addresses the creation of regular financial auditing procedures of the Secretariat and the submission of

auditing reports to the Standing Committee.

3. Increased transparency within the Secretariat: Proposal for a resolution mandating that the Secretariat make available all communications, correspondence, and other documents to all Parties and observers in order to improve the transparency of the Secretariat.

4. Human population growth and wildlife trade: Proposal for a resolution linking human population growth to impacts to wildlife and wildlife trade, to encourage countries to consider human population growth and potential efforts to reduce growth rates in their broader planning efforts, to ensure that these impacts are considered when countries are preparing NDFs and export quotas, and when making other decisions required by CITES.

5. Evaluating enforcement capacity: Proposal for a document and decision to facilitate increased CITES enforcement capacity of the Parties.

6. Reporting against new indicators of effective enforcement: Proposal that Parties reporting to the Standing Committee and the CoP under species-specific resolutions and decisions be required to provide evidence that the following is taking place: Proactive, covert, intelligence-led operations that build up a profile of wildlife criminals and their associations and networks; generation of the right kind of intelligence to enable the mapping of such associations and networks; multiagency and transnational sharing of intelligence through swift and secure means; development of national and transnational operations on the basis of intelligence; use of controlled deliveries as an evidence-gathering tool to disrupt networks; recovery of assets from wildlife crime through the use of proceeds of crime legislation; and increased detection and prosecution rates.

7. Gathering and analysis of data on illegal trade: Proposal that the reporting of illegal trade data should become a matter of compliance and that Parties provide their data to INTERPOL's Environmental Crime Programme, where it can be securely accessed by enforcement officers from all CITES Parties.

8. Enforcement matters: Controlled deliveries expertise: Recommendation that the United States take the lead among Parties to lend momentum to the International Consortium on Combating Wildlife Crime's ongoing work on controlled deliveries as a method of reaching the ''big players'' in wildlife trafficking.

9. Elevating the profile of wildlife crime: Proposal for a resolution recognizing wildlife crime as a ''serious'' crime, whereby Parties agree to change their CITES-implementing legislation as necessary to provide for the maximum deterrent.

10. Multilateral measures in CITES: Comment supporting the use of the various multilateral measures that are available within CITES to deal with concerns about permit issuance and trade, and opposing the use of ''stricter domestic measures.''

11. Uniform application of CITES: Proposal that the CoP urge Parties to refrain from imposing greater restrictions on international wildlife trade than those required under CITES.

12. Livelihoods: Recommendation that the United States support the review of the effects of CITES on livelihoods, specifically with regard to the benefits of sustainable use of CITES species to local communities.

13. Measurements and units used in reporting: Proposal for a resolution describing in detail the volume- or weight-based measurements needed for each CITES description of specimens in order to comply with the *Guidelines for the Preparation and Submission of CITES Annual Reports,* and recommending that Parties report trade using two units of measurement when possible.

14. An alternative to CITES: Proposal for a document soliciting discussion of the possibility of either substantively revising CITES or replacing it with a new Convention that would prohibit international trade in all species except for those designated as capable of sustaining regulated trade.

15. Streamlining the Review of Significant Trade process: Proposal for a resolution to restructure the Review of Significant Trade process to make it more streamlined and expeditious and also to include an automatic recommendation for a suspension of trade in species under review from those countries going through the review.

16. Periodic Review of the Appendices, Lions: Recommendation that the United States support the inclusion of the African lion (*Panthera leo*) in the Periodic Review of Felidae.

17. Definition of hunting trophy: Proposal for a document explaining the implementation and enforcement problems created by including processed and manufactured products and the term ''readily recognizable'' in the definition of ''hunting trophy'' included in Resolution Conf. 12.3 (Rev. CoP15), *Permits and certificates,* and proposal for the deletion of processed and manufactured products from the definition and replacement of the term ''readily recognizable'' with the term ''identifiable.''

18. Validation of permits for trade in scientific research materials: Proposal for a document aimed at improving the permit validation process for CITES scientific specimens.

19. Unlisted species: Proposal for a mechanism to select and review unlisted species subject to significant levels of international trade for possible listing in the CITES Appendices.

20. Newly discovered species: Proposal for a resolution that would automatically prohibit trade in a newly-discovered species until the status of the species could be properly assessed and a determination made as to whether the species requires protection under CITES.

21. U.S. captive tigers: Recommendation that the United States report at CoP16 on the status of its captive tiger population, including information about recently promulgated regulations requiring all persons and facilities holding tigers in the United States to annually report their year-end inventories and activities conducted with tigers and removing the current exemption for ''generic'' tigers.

22. Bear bile trade: Proposal for a resolution that would reduce the cruel confinement of bears for the bear bile trade by imposing requirements that bears be farmed only if there is a legitimate conservation benefit to wild populations.

23. Creation of artificial ice floes for polar bears: Comment supporting the creation of artificial ice floes that would provide polar bears with places to rest and recuperate as they migrate to the sea ice.

24. Rhinoceroses: Annotation to the Appendix-II listing of the populations of South Africa and Swaziland of the southern white rhinoceros: Recommendation that the United States approach South Africa and request that they impose a unilateral suspension on export of both live rhinoceroses and rhinoceros hunting trophies (the specimen types from South Africa downlisted to Appendix II in the annotation).

25. Elephant ivory trade mechanism: Comment supporting the vigorous development of an apolitical mechanism for approving trade in elephant ivory.

26. Elephants: Broadening of the debate beyond the issue of allowing legal ivory trade: Recommendation that the United States lend its weight to broadening the debate concerning elephants beyond the issue of allowing

legal ivory trade, which while important, should be seen in a wider context of other problems that are currently more significant in driving poaching and illegal trade.

27. Sharks, rays, and skates (elasmobranchs): Proposal for a decision directing the Secretariat to contract appropriate technical experts to prepare a report to determine the most vulnerable elasmobranch species found in international trade in order to determine which species would most benefit from CITES listings.

28. Amphibians: Proposal for a document for CoP16 requesting that range States initiate better monitoring and management of wild frog populations.

Request for Information and Comments

We invite any information and comments concerning any of the possible CoP16 proposed resolutions, decisions, and agenda items discussed above. You must submit your information and comments to us no later than the date specified in **DATES** above to ensure that we consider them. Comments and materials received will be posted for public inspection on *http://www.regulations.gov,* and will be available by appointment, from 8:00 a.m. to 4:00 p.m., Monday through Friday, at the Division of Management Authority. Our practice is to post all comments, including names and addresses of respondents, and to make comments, including names and home addresses of respondents, available for public review during regular business hours. Individual respondents may request that we withhold their home addresses from public review, which we will honor to the extent allowable by law.

There also may be circumstances in which we would withhold from public review a respondent's identity, as allowable by law. If you wish for us to withhold your name and/or address, you must state this prominently at the beginning of your comment. We will make all comments and materials submitted by organizations or businesses, and by individuals identifying themselves as representatives or officials of organizations or businesses, available for public inspection in their entirety.

Observers

Article XI, paragraph 7 of CITES states the following:

''Any body or agency technically qualified in protection, conservation or management of wild fauna and flora, in the following categories, which has informed the Secretariat of its desire to be represented at meetings of the Conference by observers, shall be admitted unless at least one-third of the Parties present object:

(a) international agencies or bodies, either governmental or non-governmental, and national governmental agencies and bodies; and

(b) national non-governmental agencies or bodies which have been approved for this purpose by the State in which they are located.

Once admitted, these observers shall have the right to participate but not to vote.''

Persons wishing to be observers representing international non-governmental organizations (which must have offices in more than one country) at CoP16 may request approval directly from the CITES Secretariat. Persons wishing to be observers representing U.S. national non-governmental organizations at CoP16 must receive prior approval from our Division of Management Authority. Once we grant our approval, a U.S. national non-governmental organization is eligible to register with the Secretariat and must do so at least 6 weeks prior to the opening of CoP16 to participate in CoP16 as an observer. Individuals who are not affiliated with an organization may not register as observers. An international non-governmental organization with at least one office in the United States may register as a U.S. non-governmental organization if it prefers.

Any organization that submits a request to us for approval as an observer should include evidence of their technical qualifications in protection, conservation, or management of wild fauna or flora, for both the organization and the individual representative(s). The request should include copies of the organization's charter and any bylaws, and a list of representatives it intends to send to CoP16. Organizations seeking approval for the first time should detail their experience in the protection, conservation, or management of wild fauna or flora, as well as their purposes for wishing to participate in CoP16 as an observer. An organization that we have previously approved as an observer at a meeting of the Conference of the Parties within the past 5 years must submit a request, but does not need to provide as much detailed information concerning its qualifications as an organization seeking approval for the first time. These requests should be sent to the Division of Management Authority at the address provided in the **ADDRESSES** section, or via email at: *managementauthority@fws.gov,* or via fax at: 703–358–2298.

Once we approve an organization as an observer, we will inform them of the appropriate page on the CITES Web site where they may obtain instructions for registration with the CITES Secretariat in Switzerland, including a meeting registration form and travel and hotel information. A list of organizations approved for observer status at CoP16 will be available upon request from the Division of Management Authority just prior to the start of CoP16.

Future Actions

We expect the CITES Secretariat to provide us with a provisional agenda for CoP16 within the next several months. Once we receive the provisional agenda, we will publish it in a **Federal Register** notice and provide the Secretariat's Web site URL. We will also provide the provisional agenda on our Web site at *http://www.fws.gov/international/CITES/CoP16.html.*

The United States will submit any proposed resolutions, decisions, and agenda items, as well as any species proposals, for consideration at CoP16 to the CITES Secretariat 150 days prior to the start of the meeting (i.e., by October 4, 2012). We will consider all available information and comments received during the comment period for this notice as we decide which proposed resolutions, decisions, and agenda items warrant submission by the United States for consideration by the Parties. With respect to our notice published on April 11, 2012 (77 FR 21798), we will consider all available information and comments received during the comment period for that notice as we decide which species proposals warrant submission by the United States for consideration by the Parties. Approximately 4 months prior to CoP16, we will post on our Web site an announcement of the species proposals and proposed resolutions, decisions, and agenda items submitted by the United States to the CITES Secretariat for consideration at CoP16.

Through an additional notice and Web site posting in advance of CoP16, we will inform you about preliminary negotiating positions on resolutions, decisions, agenda items, and amendments to the Appendices proposed by other Parties for consideration at CoP16. We will also publish an announcement of a public meeting tentatively to be held approximately 2–3 months prior to CoP16, to receive public input on our positions regarding issues on the agenda for CoP16. The procedures for developing U.S. documents and negotiating positions for a meeting of the Conference of the Parties to CITES

are outlined in 50 CFR 23.87. As noted in paragraph (c) of that section, we may modify or suspend the procedures outlined there if they would interfere with the timely or appropriate development of documents for submission to the meeting of the Conference of the Parties and of U.S. negotiating positions.

Author: The primary author of this notice is Mark Albert, Division of Management Authority; under the authority of the U.S. Endangered Species Act of 1973, as amended (16 U.S.C. 1531 *et seq.*).

Date: June 8, 2012.

Daniel M. Ashe,

Director.

[FR Doc. 2012–15121 Filed 6–20–12; 8:45 am]

BILLING CODE 4310–55–P

DEPARTMENT OF THE INTERIOR

Bureau of Land Management

[LLMT922200–12–L13100000–FI0000–P; SDM 96907]

Notice of Proposed Reinstatement of Terminated Oil and Gas Lease SDM 96907, South Dakota

AGENCY: Bureau of Land Management, Interior.

ACTION: Notice.

SUMMARY: As required by the Mineral Lands Leasing Act of 1920, as amended, Peter K. Roosevelt timely filed a petition for reinstatement of competitive oil and gas lease SDM 96907, Fall River County, South Dakota. The lessee paid the required rental accruing from the date of termination.

No leases were issued that affect these lands. The lessee agrees to new lease terms for rentals and royalties of $10 per acre and 16⅔ percent. The lessee paid the $500 administration fee for the reinstatement of the lease and $163 cost for publishing this Notice.

The lessee met the requirements for reinstatement of the lease under Sec. 31(d) and (e) of the Mineral Leasing Act of 1920 (30 U.S.C. 188). We are proposing to reinstate the lease, effective the date of termination, subject to the:

- Original terms and conditions of the lease;
- Increased rental of $10 per acre;
- Increased royalty of 16⅔ percent; and
- $163 cost of publishing this Notice.

FOR FURTHER INFORMATION CONTACT: Teri Bakken, Chief, Fluids Adjudication Section, Bureau of Land Management Montana State Office, 5001 Southgate Drive, Billings, Montana 59101–4669, 406–896–5091, *Teri_Bakken@blm.gov.*

Persons who use a telecommunications device for the deaf (TDD) may call the Federal Information Relay Service (FIRS) at 1–800–877–8339 to contact the above individual during normal business hours. The FIRS is available 24 hours a day, 7 days a week, to leave a message or question with the above individual. You will receive a reply during normal business hours.

Teri Bakken,

Chief, Fluids Adjudication Section.

[FR Doc. 2012–15164 Filed 6–20–12; 8:45 am]

BILLING CODE 4310–DN–P

DEPARTMENT OF THE INTERIOR

National Park Service

[NPS–MWR–CUVA–10100; 6065–4000–409]

Draft Trail Management Plan and Environmental Impact Statement for Cuyahoga Valley National Park, Ohio

AGENCY: National Park Service, Interior.

ACTION: Notice of Availability.

SUMMARY: The National Park Service (NPS) announces the availability of a draft Trail Management Plan and Environmental Impact Statement for Cuyahoga Valley National Park, Ohio.

DATES: The draft Trail Management Plan and Environmental Impact Statement will be available for public comment for a 60-day public review period. Comments must be received no later than 60 days after the Environmental Protection Agency publishes its notice of availability in the **Federal Register**. Public meetings will be held; specific dates, times, and locations will be announced in the local media, on the Internet, and will also be available by contacting the park at 440–546–5905.

ADDRESSES: A copy of the Plan/EIS is available on the Internet on the NPS Planning, Environment, and Public Comment Web site at: *http://www.parkplanning.nps.gov/cuyahogatrailplan.* Copies may also be obtained by making a request in writing or picked up in person at Cuyahoga Valley National Park, 15610 Vaughn Road, Brecksville, Ohio 44141.

FOR FURTHER INFORMATION CONTACT: Contact Superintendent Austin at the address above or by telephone at 440–546–5905.

SUPPLEMENTARY INFORMATION: We, the NPS, have prepared a comprehensive updated Trail Management Plan and Environmental Impact Statement. The Plan/EIS will serve as a blueprint to guide the expansion, elimination, restoration, management, and use of the trail system and its associated trail facilities over the next 15 years. Since 1985, when our first Trail Plan was established, many changes have occurred that require an update to the Plan. These include the Park's growth in visitation and programs, some park trails requiring increased operational investment due to their location and use patterns, expansion of regional trail networks, and change in outdoor recreation trends.

Several alternative actions, including the No Action, were considered in the development of the draft EIS. These are summarized briefly here. Other alternatives were explored but dismissed; these are discussed in the draft EIS.

Alternative 1—No Action: The trails, authorized uses, and facilities addressed in this plan would remain as they currently exist. We would continue trail management under current park policies, protocols and monitoring. A continuation of trail projects would occur on an individual basis and as opportunities arise with separate planning and compliance.

Actions Common to All Action Alternatives—All action alternatives share common actions to assist in meeting the goals of the Plan/EIS. These include the restoration of the existing trail system, adoption of Sustainable Trail Guidelines, and the consideration of trail facilities. Trail facilities evaluated include a water trail system with non-motorized boat launch sites along the Cuyahoga River, trailside and riverside campsites, and improved parking facilities.

Alternative 2A—Re-Use: Alternative 2A emphasizes the importance of enhancing the existing trail system's sustainability for future generations with limited expansion and reuse of existing corridors.

Alternative 2B—Re-Use with Mountain Bike Use: Alternative 2B is the same as Alternative 2A with the addition of an authorization for a linear mountain bike trail on existing trails within the Park and on lands owned and managed by our partners.

Alternative 3A—Recreation Focus: ''Trail Hubs'' will serve as interchangeable areas for recreational trail use that provides the full variety of trail experiences the Park has to offer. Trail hubs would be placed at existing visitor facilities throughout the park to establish activity centers for trail use and other activities.

Alternative 3B—Recreation Focus with Mountain Bike Use: Alternative 3B is the same as Alternative 3A with the addition of new mountain bike trails

consisting of two zones of short loop routes.

Alternative 4A—Destination Focus: Park features and attractions are the focus of this Alternative with the trail system serving as the main visitor access to these features. Expansion of the primitive hiking experience occurs to the greatest extent in Alternative 4A.

Alternative 4B—Destination Focus with Mountain Bike Trails: Alternative 4B is the same as Alternative 4B with the addition of new mountain bike trails. The mountain bike trail system consists of a long point-to-point trail with shorter loop trails to provide a variety of lengths and experiences to the mountain bike user.

Alternative 5—Re-Use, Recreation & Destination: Preferred Alternative. Alternative 5 combines trail elements from all of the Alternatives and proposed trail facilities that will best fit the park. Alternative 5 proposes the following trail elements: (1) Implementing 45 additional miles of trail, including a new 10-mile mountain bike trail; (2) incorporating actions common to all action alternatives including restoration of trails, Sustainable Trail Guidelines, and expansion and improvement of trail facilities; (3) improvement of 10 existing parking areas and the introduction of 4 new parking areas; and (4) establishment of expanded community partnerships to establish 30+ miles of bike lanes on public roads within CVNP.

We welcome comments on the Plan/EIS either by mail or through the NPS Planning, Environment, and Public Comment Web site at: *http://www.parkplanning.nps.gov/cuyahogatrailplan.* Before including your address, telephone number, email address, or other personal identifying information in your comments, you should be aware that your entire comment (including your personal identifying information) may be made publicly available at any time. While you can ask us in your comments to withhold your personal identifying information from public review, we cannot guarantee that we will be able to do so. We will make all submissions from organizations or businesses, and from individuals identifying themselves as representatives or officials of organizations or businesses, available for public inspection in their entirety.

Dated: May 14, 2012.

Michael T. Reynolds,

Regional Director, Midwest Region.

[FR Doc. 2012–15208 Filed 6–20–12; 8:45 am]

BILLING CODE 4310–MA–P

INTERNATIONAL TRADE COMMISSION

[Investigation No. 731–TA–739 (Third Review)]

Clad Steel Plate From Japan; Notice of Commission Determination To Conduct a Full Five-Year Review

AGENCY: United States International Trade Commission.

ACTION: Notice.

SUMMARY: The Commission hereby gives notice that it will proceed with a full review pursuant to section 751(c)(5) of the Tariff Act of 1930 (19 U.S.C. 1675(c)(5)) to determine whether revocation of the antidumping duty order on clad steel plate from Japan would be likely to lead to continuation or recurrence of material injury within a reasonably foreseeable time. A schedule for the review will be established and announced at a later date. For further information concerning the conduct of this review and rules of general application, consult the Commission's Rules of Practice and Procedure, part 201, subparts A through E (19 CFR part 201), and part 207, subparts A, D, E, and F (19 CFR part 207).

DATES: *Effective Date:* May 7, 2012.

FOR FURTHER INFORMATION CONTACT: Mary Messer (202–205–3193), Office of Investigations, U.S. International Trade Commission, 500 E Street SW., Washington, DC 20436. Hearing-impaired persons can obtain information on this matter by contacting the Commission's TDD terminal on 202–205–1810. Persons with mobility impairments who will need special assistance in gaining access to the Commission should contact the Office of the Secretary at 202–205–2000. General information concerning the Commission may also be obtained by accessing its Internet server (*http://www.usitc.gov*). The public record for this review may be viewed on the Commission's electronic docket (EDIS) at *http://edis.usitc.gov.*

SUPPLEMENTARY INFORMATION: On May 7, 2012, the Commission determined that it should proceed to a full review in the subject five-year review pursuant to section 751(c)(5) of the Act. The Commission found that both the domestic and respondent interested party group responses to its notice of institution (77 FR 5052, February 1, 2012) were adequate. A record of the Commissioners' votes, the Commission's statement on adequacy, and any individual Commissioner's statements will be available from the Office of the Secretary and at the Commission's Web site.

Authority: This review is being conducted under authority of title VII of the Tariff Act of 1930; this notice is published pursuant to section 207.62 of the Commission's rules.

By order of the Commission.

Issued: May 15, 2012.

Lisa R. Barton,

Acting Secretary to the Commission.

[FR Doc. 2012–15284 Filed 6–20–12; 8:45 am]

BILLING CODE 7020–02–P

DEPARTMENT OF JUSTICE

Notice of Lodging of Proposed Consent Decree Under the Clean Water Act

Notice is hereby given that on June 6, 2012, a proposed Consent Decree in *United States of America* v. *The City of Perth Amboy, New Jersey a Municipal Corporation, and the State of New Jersey,* Civil Action No. 2:12–cv–03404 was lodged with the United States District Court for the District of New Jersey.

The proposed Consent Decree resolves the City of Perth Amboy's (Perth Amboy) Clean Water Act (CWA) violations stemming from its failure to properly operate and maintain its combined sewer system. Under the terms of the Consent Decree, Perth Amboy will pay a $17,000 penalty and implement injunctive relief valued at approximately $5.4 million. The injunctive relief required by the Consent Decree includes a system-wide inspection and engineering assessment that will result in a corrective action plan that will include construction projects to repair and reline sewer lines, a pilot study of combined sewer overflows, and the development of a revised operation and maintenance manual.

The Department of Justice will receive for a period of thirty (30) days from the date of this publication comments relating to the Consent Decree. Comments should be addressed to the Assistant Attorney General, Environment and Natural Resources Division, and either emailed to *pubcomment-ees.enrd@usdoj.gov* or mailed to P.O. Box 7611, U.S. Department of Justice, Washington, DC 20044–7611, and should refer to the City of Perth Amboy, D.J. Ref. 90–5–1–1–09500.

During the public comment period, the Consent Decree may also be examined on the following Department of Justice Web site, to *http://www.usdoj.gov/enrd/Consent_Decrees.html.* A copy

of the Consent Decree may also be obtained by mail from the Consent Decree Library, P.O. Box 7611, U.S. Department of Justice, Washington, DC 20044–7611 or by faxing or emailing a request to ''Consent Decree Copy'' (*EESCDCopy.ENRD@usdoj.gov*), fax no. (202) 514–0097, phone confirmation number (202) 514–5271. If requesting a copy from the Consent Decree Library by mail, please enclose a check in the amount of $56.50 (25 cents per page reproduction cost) payable to the U.S. Treasury or, if requesting by email or fax, forward a check in that amount to the Consent Decree Library at the address given above.

Ronald G. Gluck,

Assistant Chief, Environmental Enforcement Section, Environment and Natural Resources Division.

[FR Doc. 2012–15122 Filed 6–20–12; 8:45 am]

BILLING CODE 4410–15–P

DEPARTMENT OF LABOR

Office of the Secretary

Agency Information Collection Activities; Submission for OMB Review; Comment Request; Request for Earnings Information

ACTION: Notice.

SUMMARY: The Department of Labor (DOL) is submitting the Office of Workers' Compensation Programs (OWCP) sponsored information collection request (ICR) revision titled, ''Request for Earnings Information,'' to the Office of Management and Budget (OMB) for review and approval for use in accordance with the Paperwork Reduction Act (PRA) of 1995 (44 U.S.C. 3501 et seq.).

DATES: Submit comments on or before July 23, 2012.

ADDRESSES: A copy of this ICR with applicable supporting documentation; including a description of likely respondents, proposed frequency of response, and estimated total burden may be obtained from the RegInfo.gov Web site, *http://www.reginfo.gov/public/do/PRAMain,* on the day following publication of this notice or by contacting Michel Smyth by telephone at 202–693–4129 (this is not a toll-free number) or sending an email to *DOL_PRA_PUBLIC@dol.gov.*

Submit comments about this request to the Office of Information and Regulatory Affairs, Attn: OMB Desk Officer for DOL–OWCP, Office of Management and Budget, Room 10235, New Executive Office Building, Washington, DC 20503, Telephone: 202–395–6929/Fax: 202–395–6881 (these are not toll-free numbers), email: *OIRA_submission@omb.eop.gov.*

FOR FURTHER INFORMATION CONTACT: Contact Michel Smyth by telephone at 202–693–4129 (this is not a toll-free number) or by email at *DOL_PRA_PUBLIC@dol.gov.*

SUPPLEMENTARY INFORMATION: The Request for Earnings Information Report, Form LS–426, gathers information regarding an employee's average weekly wage. This information is needed for determination of compensation benefits in accordance with Longshore and Harbor Workers' Compensation Act section 10. The ICR is classified as a revision, because the OWCP has made minor cosmetic changes to the form—such as adding the DOL Seal and removing a reference to the no longer existent Employment Standards Administration—that should not affect respondent burden.

This information collection is subject to the PRA. A Federal agency generally cannot conduct or sponsor a collection of information, and the public is generally not required to respond to an information collection, unless it is approved by the OMB under the PRA and displays a currently valid OMB Control Number. In addition, notwithstanding any other provisions of law, no person shall generally be subject to penalty for failing to comply with a collection of information if the collection of information does not display a valid OMB Control Number. *See* 5 CFR 1320.5(a) and 1320.6. The DOL obtains OMB approval for this information collection under Control Number 1240–0025. The current approval is scheduled to expire on June 30, 2012; however, it should be noted that existing information collection requirements submitted to the OMB receive a month-to-month extension while they undergo review. For additional information, see the related notice published in the **Federal Register** on March 20, 2012 (77 FR 16266).

Interested parties are encouraged to send comments to the OMB, Office of Information and Regulatory Affairs at the address shown in the **ADDRESSES** section within 30 days of publication of this notice in the **Federal Register**. In order to help ensure appropriate consideration, comments should mention OMB Control Number 1240–0025. The OMB is particularly interested in comments that:

- Evaluate whether the proposed collection of information is necessary for the proper performance of the functions of the agency, including whether the information will have practical utility;
- Evaluate the accuracy of the agency's estimate of the burden of the proposed collection of information, including the validity of the methodology and assumptions used;
- Enhance the quality, utility, and clarity of the information to be collected; and
- Minimize the burden of the collection of information on those who are to respond, including through the use of appropriate automated, electronic, mechanical, or other technological collection techniques or other forms of information technology, e.g., permitting electronic submission of responses.

Agency: DOL–OWCP.

Title of Collection: Request for Earnings Information.

OMB Control Number: 1240–0025.

Affected Public: Individuals or Households.

Total Estimated Number of Respondents: 1,100.

Total Estimated Number of Responses: 1,100.

Total Estimated Annual Burden Hours: 275.

Total Estimated Annual Other Costs Burden: $528.

Dated: June 15, 2012.

Michel Smyth,

Departmental Clearance Officer.

[FR Doc. 2012–15187 Filed 6–20–12; 8:45 am]

BILLING CODE 4510–CF–P

DEPARTMENT OF LABOR

Office of the Secretary

Agency Information Collection Activities; Submission for OMB Review; Comment Request; Mine Mapping and Records of Opening, Closing, and Reopening of Mines

ACTION: Notice.

SUMMARY: The Department of Labor (DOL) is submitting the Mine Safety and Health Administration (MSHA) sponsored information collection request (ICR) titled, ''Mine Mapping and Records of Opening, Closing, and Reopening of Mines,'' to the Office of Management and Budget (OMB) for review and approval for continued use in accordance with the Paperwork Reduction Act (PRA) of 1995 (44 U.S.C. 3501 et seq.).

DATES: Submit comments on or before July 23, 2012.

ADDRESSES: A copy of this ICR with applicable supporting documentation; including a description of the likely

respondents, proposed frequency of response, and estimated total burden may be obtained from the RegInfo.gov Web site, *http://www.reginfo.gov/public/do/PRAMain,* on the day following publication of this notice or by contacting Michel Smyth by telephone at 202–693–4129 (this is not a toll-free number) or sending an email to *DOL_PRA_PUBLIC@dol.gov.*

Submit comments about this request to the Office of Information and Regulatory Affairs, Attn: OMB Desk Officer for DOL–MSHA, Office of Management and Budget, Room 10235, New Executive Office Building, Washington, DC 20503, Telephone: 202–395–6929/Fax: 202–395–6881 (these are not toll-free numbers), email: *OIRA_submission@omb.eop.gov.*

FOR FURTHER INFORMATION CONTACT: Contact Michel Smyth by telephone at 202–693–4129 (this is not a toll-free number) or by email at *DOL_PRA_PUBLIC@dol.gov.*

SUPPLEMENTARY INFORMATION: The ICR addressed by this notice is intended to protect miners by assuring that up-to-date, accurate mine maps contain the information needed to clarify the best alternatives for action during an emergency operation. Coal mine operators routinely use maps to create safe and effective development plans.

Mine maps are schematic depictions of critical mine infrastructure, such as water, power, transportation, ventilation, and communication systems. Using accurate, up-to-date maps during a disaster, mine emergency personnel can locate refuges for miners and identify sites of explosion potential; they can know where stationary equipment was placed, where ground was secured, and where they can best begin a rescue operation. During a disaster, maps can be crucial to the safety of the emergency personnel who must enter a mine to begin a search for survivors. Mine maps may describe the current status of an operating mine or provide crucial information about a long-closed mine that is being reopened.

Coal mine operators use map information to develop safe and effective plans and to help determine hazards before beginning work in areas, such as abandoned underground mines or the worked out and inaccessible areas of an active underground or surface mine. Abandoned mines or inaccessible areas of active mines may have water inundation potentials, explosive levels of methane or lethal gases. If an operator, unaware of the hazards, were to mine into such an area, miners could be killed or seriously injured.

This information collection is subject to the PRA. A Federal agency generally cannot conduct or sponsor a collection of information, and the public is generally not required to respond to an information collection, unless it is approved by the OMB under the PRA and displays a currently valid OMB Control Number. In addition, notwithstanding any other provisions of law, no person shall generally be subject to penalty for failing to comply with a collection of information if the collection of information does not display a valid OMB Control Number. *See* 5 CFR 1320.5(a) and 1320.6. The DOL obtains OMB approval for this information collection under Control Number 1219–0073. The current approval is scheduled to expire on June 30, 2012; however, it should be noted that existing information collection requirements submitted to the OMB receive a month-to-month extension while they undergo review. For additional information, see the related notice published in the **Federal Register** on March 22, 2012 (77 FR 16863).

Interested parties are encouraged to send comments to the OMB, Office of Information and Regulatory Affairs at the address shown in the **ADDRESSES** section within 30 days of publication of this notice in the **Federal Register**. In order to help ensure appropriate consideration, comments should mention OMB Control Number 1219–0073. The OMB is particularly interested in comments that:

- Evaluate whether the proposed collection of information is necessary for the proper performance of the functions of the agency, including whether the information will have practical utility;
- Evaluate the accuracy of the agency's estimate of the burden of the proposed collection of information, including the validity of the methodology and assumptions used;
- Enhance the quality, utility, and clarity of the information to be collected; and
- Minimize the burden of the collection of information on those who are to respond, including through the use of appropriate automated, electronic, mechanical, or other technological collection techniques or other forms of information technology, e.g., permitting electronic submission of responses.

Agency: DOL–MSHA.

Title of Collection: Mine Mapping and Records of Opening, Closing, and Reopening of Mines.

OMB Control Number: 1219–0073.

Affected Public: Private Sector—Businesses or other for-profits.

Total Estimated Number of Respondents: 1,876.

Total Estimated Number of Responses: 804.

Total Estimated Annual Burden Hours: 16,476.

Total Estimated Annual Other Costs Burden: $21,474,889.

Dated: June 15, 2012.

Michel Smyth,

Departmental Clearance Officer.

[FR Doc. 2012–15188 Filed 6–20–12; 8:45 a.m.]

BILLING CODE 4510–43–P

DEPARTMENT OF LABOR

Office of the Secretary

Agency Information Collection Activities; Submission for OMB Review; Comment Request; Diesel-Powered Equipment in Underground Coal Mines

ACTION: Notice.

SUMMARY: The Department of Labor (DOL) is submitting the Mine Safety and Health Administration (MSHA) sponsored information collection request (ICR) titled, ''Diesel-Powered Equipment in Underground Coal Mines,'' to the Office of Management and Budget (OMB) for review and approval for continued use in accordance with the Paperwork Reduction Act (PRA) of 1995 (44 U.S.C. 3501 et seq.).

DATES: Submit comments on or before July 23, 2012.

ADDRESSES: A copy of this ICR with applicable supporting documentation; including a description of the likely respondents, proposed frequency of response, and estimated total burden may be obtained from the RegInfo.gov Web site, *http://www.reginfo.gov/public/do/PRAMain,* on the day following publication of this notice or by contacting Michel Smyth by telephone at 202–693–4129 (this is not a toll-free number) or sending an email to *DOL_PRA_PUBLIC@dol.gov.*

Submit comments about this request to the Office of Information and Regulatory Affairs, Attn: OMB Desk Officer for DOL–MSHA, Office of Management and Budget, Room 10235, New Executive Office Building, Washington, DC 20503, Telephone: 202–395–6929/Fax: 202–395–6881 (these are not toll-free numbers), email: *OIRA_submission@omb.eop.gov.*

FOR FURTHER INFORMATION CONTACT: Contact Michel Smyth by telephone at 202–693–4129 (this is not a toll-free number) or by email at *DOL_PRA_PUBLIC@dol.gov.*

SUPPLEMENTARY INFORMATION: The MSHA requires mine operators to provide important safety and health protections to underground coal miners who work on and around diesel-powered equipment. Engines powering diesel equipment are potential contributors to fires and explosion hazards in the confined environment of an underground coal mine where combustible coal dust and explosive methane gas are present. Diesel equipment operating in underground coal mines also can pose serious health risks to miners from exposure to diesel exhaust emissions, including diesel particulates, oxides of nitrogen, and carbon monoxide. Diesel exhaust is a lung carcinogen in animals.

This ICR relates to the maintenance and use of diesel equipment; tests and maintenance of fire suppression systems on both the equipment and at fueling stations; and exhaust gas sampling. The records are required to document essential testing and maintenance of diesel-powered equipment are conducted regularly by qualified persons; corrective actions are taken; and persons performing maintenance, repairs, examinations, and tests are trained and qualified to perform such tasks.

The safety requirements for diesel equipment include many proven features required in existing standards for electric-powered mobile equipment, such as cabs or canopies, methane monitors, brakes and lights. Sampling of diesel exhaust emissions is required to protect miners from overexposure to carbon monoxide and nitrogen dioxide contained in diesel exhaust.

The subject information collection requirements are found in regulations 30 CFR 75.1901(a), Diesel fuel requirements; 75.1911(j), Fire suppression systems for diesel-powered equipment and fuel transportation units; 75.1912(i), Fire suppression systems for permanent underground diesel fuel storage facilities; 75.1914(f)(1) and (2), (g)(5), and (h)(1) and (2), Maintenance of diesel-powered equipment; and 75.1915(b)(5), (c)(1), and (2), Training and qualification of persons working on diesel-powered equipment.

These information collections are subject to the PRA. A Federal agency generally cannot conduct or sponsor a collection of information, and the public is generally not required to respond to an information collection, unless it is approved by the OMB under the PRA and displays a currently valid OMB Control Number. In addition, notwithstanding any other provisions of law, no person shall generally be subject to penalty for failing to comply with a collection of information if the collection of information does not display a valid OMB Control Number. *See* 5 CFR 1320.5(a) and 1320.6. The DOL obtains OMB approval for this information collection under Control Number 1219–0119. The current OMB approval is scheduled to expire on June 30, 2012; however, it should be noted that existing information collection requirements submitted to the OMB receive a month-to-month extension while they undergo review. For additional information, see the related notice published in the **Federal Register** on March 23, 2012 (77 FR 17099).

Interested parties are encouraged to send comments to the OMB, Office of Information and Regulatory Affairs at the address shown in the **ADDRESSES** section within 30 days of publication of this notice in the **Federal Register.** In order to help ensure appropriate consideration, comments should mention OMB Control Number 1219–0119. The OMB is particularly interested in comments that:

- Evaluate whether the proposed collection of information is necessary for the proper performance of the functions of the agency, including whether the information will have practical utility;
- Evaluate the accuracy of the agency's estimate of the burden of the proposed collection of information, including the validity of the methodology and assumptions used;
- Enhance the quality, utility, and clarity of the information to be collected; and
- Minimize the burden of the collection of information on those who are to respond, including through the use of appropriate automated, electronic, mechanical, or other technological collection techniques or other forms of information technology, e.g., permitting electronic submission of responses.

Agency: DOL–MSHA.

Title of Collection: Diesel-Powered Equipment in Underground Coal Mines.

OMB Control Number: 1219–0119.

Affected Public: Private Sector—Businesses or other for profits.

Total Estimated Number of Respondents: 223.

Total Estimated Number of Responses: 169,003.

Total Estimated Annual Burden Hours: 14,364.

Total Estimated Annual Other Costs Burden: $457,808.

Dated: June 18, 2012.

Michel Smyth,

Departmental Clearance Officer.

[FR Doc. 2012–15189 Filed 6–20–12; 8:45 a.m.]

BILLING CODE 4510–43–P

NATIONAL ARCHIVES AND RECORDS ADMINISTRATION

Agency Information Collection Activities: Proposed Collection; Comment Request

AGENCY: National Archives and Records Administration (NARA).

ACTION: Notice.

SUMMARY: NARA is giving public notice that the agency proposes to request extension of three currently approved information collections. The first information collection is used for requesting permission to use privately owned equipment to microfilm archival holdings in the National Archives of the United States and Presidential libraries. The second information collection is used for requesting permission to film, photograph, or videotape at a NARA facility for news purposes. The third information collection is used for requesting permission to use NARA facilities for events. The public is invited to comment on the proposed information collection pursuant to the Paperwork Reduction Act of 1995.

DATES: Written comments must be received on or before August 20, 2012 to be assured of consideration.

ADDRESSES: Comments should be sent to: Paperwork Reduction Act Comments (I–P), Room 4400, National Archives and Records Administration, 8601 Adelphi Rd, College Park, MD 20740–6001; or faxed to 301–713–7409; or electronically mailed to *tamee.fechhelm@nara.gov.*

FOR FURTHER INFORMATION CONTACT: Requests for additional information or copies of the proposed information collections and supporting statements should be directed to Tamee Fechhelm at telephone number 301–837–1694 or fax number 301–713–7409.

SUPPLEMENTARY INFORMATION: Pursuant to the Paperwork Reduction Act of 1995 (Pub. L. 104–13), NARA invites the general public and other Federal agencies to comment on proposed information collections. The comments and suggestions should address one or more of the following points:
(a) Whether the proposed information collections are necessary for the proper performance of the functions of NARA; (b) the accuracy of NARA's estimate of the burden of the proposed information collections; (c) ways to enhance the quality, utility, and clarity of the information to be collected; and (d) ways to minimize the burden of the collection of information on respondents, including the use of information technology; and (e) whether

small businesses are affected by this collection. The comments that are submitted will be summarized and included in the NARA request for Office of Management and Budget (OMB) approval. All comments will become a matter of public record. In this notice, NARA is soliciting comments concerning the following information collections:

1. *Title:* Request To Microfilm Records.
OMB number: 3095–0017.
Agency form number: None.
Type of review: Regular.
Affected public: Companies and organizations that wish to microfilm archival holdings in the National Archives of the United States or a Presidential library for micropublication.
Estimated number of respondents: 2.
Estimated time per response: 10 hours.
Frequency of response: On occasion (when respondent wishes to request permission to microfilm records).
Estimated total annual burden hours: 20.
Abstract: The information collection is prescribed by 36 CFR 1254.92. The collection is prepared by companies and organizations that wish to microfilm archival holdings with privately-owned equipment. NARA uses the information to determine whether the request meets the criteria in 36 CFR 1254.94, to evaluate the records for filming, and to schedule use of the limited space available for filming.

2. *Title:* Request to film, photograph, or videotape at a NARA facility for news purposes.
OMB number: 3095–0040.
Agency form number: None.
Type of review: Regular.
Affected public: Business or other for-profit, not-for-profit institutions.
Estimated number of respondents: 660.
Estimated time per response: 10 minutes.
Frequency of response: On occasion.
Estimated total annual burden hours: 110.
Abstract: The information collection is prescribed by 36 CFR 1280.48. The collection is prepared by organizations that wish to film, photograph, or videotape on NARA property for news purposes. NARA needs the information to determine if the request complies with NARA's regulation, to ensure protections of archival holdings, and to schedule the filming appointment.

3. *Title:* Request to use NARA facilities for events.
OMB number: 3095–0043.
Agency form number: NA 16008.
Type of review: Regular.
Affected public: Not-for-profit institutions, individuals or households, business or other for-profit, Federal government.
Estimated number of respondents: 22.
Estimated time per response: 30 minutes.
Frequency of response: On occasion.
Estimated total annual burden hours: 11.
Abstract: The information collection is prescribed by 36 CFR 1280.80. The collection is prepared by organizations that wish to use NARA public areas for an event. NARA uses the information to determine whether or not we can accommodate the request and to ensure that the proposed event complies with NARA regulations.

Dated: June 15, 2012.

Michael L. Wash,

Executive for Information Services/CIO.

[FR Doc. 2012–15193 Filed 6–20–12; 8:45 am]

BILLING CODE 7515–01–P

NATIONAL ARCHIVES AND RECORDS ADMINISTRATION

Records Schedules; Availability and Request for Comments

AGENCY: National Archives and Records Administration (NARA).

ACTION: Notice of availability of proposed records schedules; request for comments.

SUMMARY: The National Archives and Records Administration (NARA) publishes notice at least once monthly of certain Federal agency requests for records disposition authority (records schedules). Once approved by NARA, records schedules provide mandatory instructions on what happens to records when no longer needed for current Government business. They authorize the preservation of records of continuing value in the National Archives of the United States and the destruction, after a specified period, of records lacking administrative, legal, research, or other value. Notice is published for records schedules in which agencies propose to destroy records not previously authorized for disposal or reduce the retention period of records already authorized for disposal. NARA invites public comments on such records schedules, as required by 44 U.S.C. 3303a(a).

DATES: Requests for copies must be received in writing on or before July 23, 2012. Once the appraisal of the records is completed, NARA will send a copy of the schedule. NARA staff usually prepare appraisal memorandums that contain additional information concerning the records covered by a proposed schedule. These, too, may be requested and will be provided once the appraisal is completed. Requesters will be given 30 days to submit comments.

ADDRESSES: You may request a copy of any records schedule identified in this notice by contacting Records Management Services (ACNR) using one of the following means:

Mail: NARA (ACNR), 8601 Adelphi Road, College Park, MD 20740–6001.
Email: request.schedule@nara.gov.
FAX: 301–837–3698.

Requesters must cite the control number, which appears in parentheses after the name of the agency which submitted the schedule, and must provide a mailing address. Those who desire appraisal reports should so indicate in their request.

FOR FURTHER INFORMATION CONTACT: Margaret Hawkins, Director, National Records Management Program (ACNR), National Archives and Records Administration, 8601 Adelphi Road, College Park, MD 20740–6001. Telephone: 301–837–1799. Email: *request.schedule@nara.gov.*

SUPPLEMENTARY INFORMATION: Each year Federal agencies create billions of records on paper, film, magnetic tape, and other media. To control this accumulation, agency records managers prepare schedules proposing retention periods for records and submit these schedules for NARA's approval, using the Standard Form (SF) 115, Request for Records Disposition Authority. These schedules provide for the timely transfer into the National Archives of historically valuable records and authorize the disposal of all other records after the agency no longer needs them to conduct its business. Some schedules are comprehensive and cover all the records of an agency or one of its major subdivisions. Most schedules, however, cover records of only one office or program or a few series of records. Many of these update previously approved schedules, and some include records proposed as permanent.

The schedules listed in this notice are media neutral unless specified otherwise. An item in a schedule is media neutral when the disposition instructions may be applied to records regardless of the medium in which the records are created and maintained. Items included in schedules submitted to NARA on or after December 17, 2007, are media neutral unless the item is limited to a specific medium. (See 36 CFR 1225.12(e).)

No Federal records are authorized for destruction without the approval of the Archivist of the United States. This approval is granted only after a thorough consideration of their administrative use by the agency of origin, the rights of the Government and of private persons directly affected by the Government's activities, and whether or not they have historical or other value.

Besides identifying the Federal agencies and any subdivisions requesting disposition authority, this public notice lists the organizational unit(s) accumulating the records or indicates agency-wide applicability in the case of schedules that cover records that may be accumulated throughout an agency. This notice provides the control number assigned to each schedule, the total number of schedule items, and the number of temporary items (the records proposed for destruction). It also includes a brief description of the temporary records. The records schedule itself contains a full description of the records at the file unit level as well as their disposition. If NARA staff has prepared an appraisal memorandum for the schedule, it too includes information about the records. Further information about the disposition process is available on request.

Schedules Pending

1. Department of Defense, Defense Threat Reduction Agency. (N1–374–09–5, 1 item, 1 temporary item). Master files of an electronic information system used for budget planning, financial forecasting, and related functions.

2. Department of Defense, Defense Threat Reduction Agency. (N1–374–09–6, 1 item, 1 temporary item). Master files of an electronic information system used for accounting, budgeting, and related functions.

3. Department of Justice, Antitrust Division (N1–60–09–54, 4 items, 4 temporary items). Content and management records for the division's internal staff Web site.

4. Department of Justice, Criminal Division (DAA–0060–2012–0008, 1 item, 1 temporary item). Master files of an electronic information system used to track record maintenance, location, and disposition.

5. Department of Justice, Criminal Division (DAA–0060–2011–0017, 8 items, 8 temporary items). Web content, web management, and technical records for an internal component Web site that contains no unique content.

6. Department of Justice, Criminal Division (DAA–0060–2012–0010, 1 item, 1 temporary item). Master files of an electronic information system used to track case assignment and workflow.

7. Department of Justice, Justice Management Division (DAA–0060–2012–0012, 1 item, 1 temporary item). Personnel rosters recording the onboard status of federal employees assigned to the offices of the Attorney General.

8. Department of Justice, Office of Community Oriented Policing Services (N1–60–09–70, 2 items, 2 temporary items). Content and management records for the office's internal staff Web site.

9. Department of Justice, Office of the Inspector General (DAA–0060–2012–0014, 1 item, 1 temporary item). Master files of an electronic information system used to track review action assignments and customer satisfaction survey data for reports on investigations.

10. Department of Labor, Office of Administrative Law Judges (N1–174–09–2, 6 items, 5 temporary items). Web site content and design records, and master files of electronic information systems used to maintain case file information. Proposed for permanent retention is an electronic library containing final decisions and orders.

11. Department of the Navy. United States Marine Corps. (N1–127–09–3, 3 items, 2 temporary items). Reference copies of officer and enlisted service records. Proposed for permanent retention are electronic officer and enlisted service records.

12. Department of State, Bureau of International Information Programs (N1–59–09–21, 5 items, 4 temporary items). Records of the Office of Information Resources, including electronic resources used to support program functions and provide information concerning public diplomacy. Proposed for permanent retention are policy and program records.

13. Department of the Treasury, Internal Revenue Service (N1–58–11–17, 2 items, 2 temporary items). Master files and system documentation of an electronic information system used to track cases of underreporting and correspondence.

14. Department of the Treasury, Internal Revenue Service (N1–58–11–20, 2 items, 2 temporary items). Master files and system documentation of an electronic information system used to assist staff in resolving errors on certain tax returns.

15. Department of Treasury, Internal Revenue Service (N1–58–12–5, 2 items, 2 temporary items). Master files and documentation of an electronic information system used to manage case information and reports responding to information requests.

16. Federal Reserve System, Board of Governors of the Federal Reserve System (N1–82–12–1, 3 items, 3 temporary items). Records of the Law Enforcement Unit Training Bureau, including documentation of internal unit member training, participation in off-site training, and equipment inventory and maintenance.

17. Federal Retirement Thrift Investment Board, Office of Investments (N1–474–12–1, 1 item, 1 temporary item). Statistical reports used to monitor investment performance.

18. Federal Retirement Thrift Investment Board, Office of Investments (N1–474–12–4, 1 item, 1 temporary item). Regular investment performance reports.

19. Federal Retirement Thrift Investment Board, Office of Investments (N1–474–12–5, 1 item, 1 temporary item). Subject files relating to thrift investments.

20. Federal Retirement Thrift Investment Board, Office of Investments (N1–474–12–6, 2 items, 2 temporary items). Records of investment policy and procedures.

21. Federal Trade Commission, Agency-wide (N1–122–09–1, 23 items, 16 temporary items). Comprehensive schedule covering all aspects of agency work. Records relating to administrative and mission support functions; budget and financial administration; routine health, safety, and security; background records of inspector general investigative files; and project and investigative files. Proposed for permanent retention are significant project files; documentation of the Commission's establishment, regulations, policy and organization including related deliberations and findings; final issuances; and inspector general files including final reports and case files.

22. National Credit Union Administration, Agency-wide (N1–413–09–2, 23 items, 15 temporary items). Administrative records including routine reports and working files. Proposed for permanent retention are significant reports, manuals, and meeting records.

23. Nuclear Regulatory Commission, Office of Nuclear Reactor Regulation (N1–431–08–19, 2 items, 2 temporary items). Master files and outputs of an electronic information system containing information on requests from nuclear power plants for variations in required testing and inspection procedures for plant components.

24. Social Security Administration, Deputy Commissioner for Systems (DAA–0047–2012–0004, 4 items, 4 temporary items). Master files of an

electronic information system used for internal workload tracking and resource allocation.

Dated: June 11, 2012.

Paul M. Wester, Jr.,

Chief Records Officer for the U.S. Government.

[FR Doc. 2012–15198 Filed 6–20–12; 8:45 am]

BILLING CODE 7515–01–P

NATIONAL SCIENCE FOUNDATION

Notice of Permit Modification Received Under the Antarctic Conservation Act of 1978 (Pub. L. 95–541)

AGENCY: National Science Foundation.

ACTION: Notice of Permit Modification Request Received Under the Antarctic Conservation Act of 1978, Public Law 95–541.

SUMMARY: The National Science Foundation (NSF) is required to publish a notice of requests to modify permits issued to conduct activities regulated under the Antarctic Conservation Act of 1978. NSF has published regulations under the Antarctic Conservation Act at Title 45 Part 670 of the Code of Federal Regulations. This is the required notice of a requested permit modification.

DATES: Interested parties are invited to submit written data, comments, or views with respect to this permit application by July 23, 2012. Permit applications may be inspected by interested parties at the Permit Office, address below.

ADDRESSES: Comments should be addressed to Permit Office, Room 755, Office of Polar Programs, National Science Foundation, 4201 Wilson Boulevard, Arlington, Virginia 22230.

FOR FURTHER INFORMATION CONTACT: Nadene G. Kennedy at the above address or (703) 292–7405.

SUPPLEMENTARY INFORMATION: The National Science Foundation, as directed by the Antarctic Conservation Act of 1978 (Pub. L. 95–541), as amended by the Antarctic Science, Tourism and Conservation Act of 1996, has developed regulations for the establishment of a permit system for various activities in Antarctica and designation of certain animals and certain geographic areas a requiring special protection. The regulations establish such a permit system to designate Antarctic Specially Protected Areas.

Description of Permit Modification Requested: The Foundation issued a permit (2011–002) to David Ainley on May 28, 2010. The issued permit allows the applicant to enter Beaufort Island ASPA 105, Cape Royds ASPA 121, and Cape Crozier ASPA 124 to band 1800 Adelie fledglings, implant PIT tags on 250 chick and 300 adult Adelies, and, apply TDR/satellite tags, weigh and blood sample 55 Adelie adults, affix, weight, then later remove ''fish tag'', weight and release, and mark nests as part of a study to determine the effect of age, experience and physiology on individual foraging efficiency, breeding success and survival, and develop a comprehensive model for the Ross-Beaufort island metapopulations incorporating all the factors investigated.

The applicant requests a modification to his permit to allow:

(1) Increase the number of adults from 55–85 for attaching satellite tags at Cape Crozier (ASPA 124). The additional 30 adults will have SPLASH tags (Wildlife Computers) attached. The SPLASH tags record depth, light, and temperature every second and report positions to the ARGOS satellite a few times per day. The real-time positions of the penguins as they forage will be transmitted to the satellite and made available on the Internet. The information will be used to steer the iRobot glider to penguin foraging hotspots, where the glider will assess characteristics of the foraging area.

(2) At Cape Royds (ASPA 121) up to 30 Adelies will have their body mass recorded, bill and flipper dimensions taken, 3–5 feathers removed to confirm gender of the penguin, and have GPS/TDR tags attached and later removed. The information gained from the tags will be used to assess the change in foraging behavior upon the arrival of whales in the penguin's foraging area within the leads of the McMurdo Sound fast ice as it breaks up. The density and horizontal/depth distribution of prey will be assessed using deployed ROV.

Location: ASPA 121–Cape Royds, and ASPA 124–Cape Crozier, Ross Island, and ASPA 105–Beaufort Island, Ross Sea.

DATES: September 1, 2012 to August 31, 2015.

Nadene G. Kennedy,

Permit Officer, Office of Polar Programs.

[FR Doc. 2012–15092 Filed 6–20–12; 8:45 am]

BILLING CODE 7555–01–P

NATIONAL SCIENCE FOUNDATION

Notice of Permit Modification Received Under the Antarctic Conservation Act of 1978 (Pub. L. 95–541)

AGENCY: National Science Foundation.

ACTION: Notice of Permit Modification Request Received Under the Antarctic Conservation Act of 1978, Public Law 95–541.

SUMMARY: The National Science Foundation (NSF) is required to publish a notice of requests to modify permits issued to conduct activities regulated under the Antarctic Conservation Act of 1978. NSF has published regulations under the Antarctic Conservation Act at Title 45 Part 670 of the Code of Federal Regulations. This is the required notice of a requested permit modification.

DATES: Interested parties are invited to submit written data, comments, or views with respect to this permit application by July 23, 2012. Permit applications may be inspected by interested parties at the Permit Office, address below.

ADDRESSES: Comments should be addressed to Permit Office, Room 755, Office of Polar Programs, National Science Foundation, 4201 Wilson Boulevard, Arlington, Virginia 22230.

FOR FURTHER INFORMATION CONTACT: Nadene G. Kennedy at the above address or (703) 292–7405.

SUPPLEMENTARY INFORMATION: The National Science Foundation, as directed by the Antarctic Conservation Act of 1978 (Pub. L. 95–541), as amended by the Antarctic Science, Tourism and Conservation Act of 1996, has developed regulations for the establishment of a permit system for various activities in Antarctica and designation of certain animals and certain geographic areas a requiring special protection. The regulations establish such a permit system to designate Antarctic Specially Protected Areas.

Description of Permit Modification Requested: The Foundation issued a permit (2011–003) to Jo-Ann Mellish on June 6, 2011. The issued permit allows the applicant to capture and restrain up to 40 Weddell seals (weaned pups, juveniles and adults) to weigh, take digital images for 3D photogrammetric models and infrared analysis and ultrasound measurements of blubber depth, collect blood samples from the extradural vein, and blubber samples collected with a sterile biopsy punch. In addition, a telemetry instrument pack is glued to the fur in the mid-dorsal region. The pack allows for the recording of depth, swim speed, ambient temperature, and light levels, stomach temperature, heat flux and skin temperature. An additional stroke frequency sensor is glued to the base of the tail. These tests and instruments help quantify thermoregulatory

expenses in a model pagophilic species, the Weddell seal, as a function of size and body condition on a small temporal scale for specific environments, activities and swim speeds.

The applicant requests a modification to her permit to allow:

(1) Increase the number of seals from 40–55 (pup through adult) over the life of the permit. The addition of the 15 additional seals takes into account the loss of tags and incomplete datasets from irretrievable equipment. The additional seals will allow a minimum of 10 complete datasets from each age class (pup, juvenile, and adult).

(2) Authorization to conduct a full necropsy with collection of blood and tissue samples for import into the U.S. for post-mortem analysis.

Location: ASPA 121–Cape Royds, and McMurdo Sound.

Dates: October 2, 2012 to February 28, 2013.

Nadene G. Kennedy,

Permit Officer, Office of Polar Programs.

[FR Doc. 2012–15118 Filed 6–20–12; 8:45 am]

BILLING CODE 7555–01–P

NATIONAL SCIENCE FOUNDATION

Notice of Permits Issued Under the Antarctic Conservation Act of 1978

AGENCY: National Science Foundation.

ACTION: Notice of permits issued under the Antarctic Conservation of 1978, Public Law 95–541.

SUMMARY: The National Science Foundation (NSF) is required to publish notice of permits issued under the Antarctic Conservation Act of 1978. This is the required notice.

FOR FURTHER INFORMATION CONTACT: Nadene G. Kennedy, Permit Office, Office of Polar Programs, Rm. 755, National Science Foundation, 4201 Wilson Boulevard, Arlington, VA 22230.

SUPPLEMENTARY INFORMATION: On May 16, 2012, the National Science Foundation published a notice in the **Federal Register** of a permit application received. The permit was issued on June 15, 2012 to:

Paul J. Ponganis, Permit No. 2013–004.

Nadene G. Kennedy,

Permit Officer.

[FR Doc. 2012–15123 Filed 6–20–12; 8:45 am]

BILLING CODE 7555–01–P

NUCLEAR REGULATORY COMMISSION

Advisory Committee on the Medical Uses of Isotopes: Meeting Notice

AGENCY: U.S. Nuclear Regulatory Commission.

ACTION: Notice of Meeting.

SUMMARY: NRC will convene a teleconference meeting of the Advisory Committee on the Medical Uses of Isotopes (ACMUI) on July 9, 2012. The purpose of the meeting will be to discuss the radium-223 chloride subcommittee report. NRC will also convene a regular meeting of the ACMUI on September 20–21, 2012. A sample of agenda items to be discussed during the public session includes: (1) Reducing occupational dose limits; (2) status of data collection on patient release; (3) status update on 10 CFR part 35 rulemaking; (4) status update on proposed regulatory changes for permanent implant brachytherapy programs; (5) follow-up on ACMUI reporting structure; and (6) update on domestic production of molybdenum-99. The regular meeting agenda is subject to change. The current agendas for both meetings and any updates will be available prior to the meetings at *http://www.nrc.gov/reading-rm/doc-collections/acmui/agenda* or by emailing Ms. Ashley Cockerham at the contact information below.

Purpose: Discuss issues related to 10 CFR Part 35 Medical Use of Byproduct Material.

Date and Time for Teleconference Meeting: July 9, 2012, from 11:00 a.m. to 12:00 p.m.

Date and Time for Regular Meeting Closed Session: September 20, 2012, from 8:30 a.m. to 11:30 a.m. This session will be closed for ACMUI training.

Date and Time for Regular Meeting Open Sessions: September 20, 2012, from 1:00 p.m. to 5:00 p.m. and September 21, 2012, from 8:30 a.m. to 12:00 p.m. Regular meeting times are subject to change.

Address for Regular Meeting: U.S. Nuclear Regulatory Commission, Two White Flint North Building, Room T2–B3, 11545 Rockville Pike, Rockville, Maryland 20852.

Public Participation: Any member of the public who wishes to participate in the meetings in person or via phone should contact Ms. Cockerham using the information below. The regular meeting on September 20–21 will also be webcast live at *http://video.nrc.gov.*

Contact Information: Ashley Cockerham, email: *ashley.cockerham@nrc.gov,* telephone: (240) 888–7129.

Conduct of the Meeting

Leon S. Malmud, M.D., will chair the meeting. Dr. Malmud will conduct the meeting in a manner that will facilitate the orderly conduct of business. The following procedures apply to public participation in the meeting:

1. Persons who wish to provide a written statement should submit an electronic copy to Ms. Cockerham at the contact information listed above. All submittals must be received five business days prior to the meeting and must pertain to the topic on the agenda for the meeting.

2. Questions and comments from members of the public will be permitted during the meeting at the discretion of the Chairman.

3. The draft transcripts will be available on ACMUI's Web site (*http://www.nrc.gov/reading-rm/doc-collections/acmui/tr/)* within 30 business days of the meeting. A meeting summary will be available on ACMUI's Web site (*http://www.nrc.gov/reading-rm/doc-collections/acmui/meeting-summaries/*) within 30 business days of the meeting.

4. Persons who require special services, such as those for the hearing impaired, should notify Ms. Cockerham of their planned attendance.

This meeting will be held in accordance with the Atomic Energy Act of 1954, as amended (primarily Section 161a); the Federal Advisory Committee Act (5 U.S.C. App); and the Commission's regulations in Title 10, U.S. Code of Federal Regulations, Part 7.

Dated: June 14, 2012.

Andrew L. Bates,

Advisory Committee Management Officer.

[FR Doc. 2012–15173 Filed 6–20–12; 8:45 am]

BILLING CODE 7590–01–P

NUCLEAR REGULATORY COMMISSION

[NRC–2012–0128]

Report to Congress on Abnormal Occurrences; Fiscal Year 2011; Dissemination of Information

Section 208 of the Energy Reorganization Act of 1974 (Pub. L. 93–438) defines an abnormal occurrence (AO) as an unscheduled incident or event that the U.S. Nuclear Regulatory Commission (NRC) determines to be significant from the standpoint of public health or safety. The Federal Reports Elimination and Sunset Act of 1995 (Pub. L. 104–68) requires that AOs be

reported to Congress annually. During Fiscal Year (FY) 2011, 24 events that occurred at facilities licensed by the NRC and/or Agreement States were determined to be AOs.

This report describes five events at NRC-licensed facilities. The first event involved radiation exposure to an embryo/fetus, and the second was an event of high safety significance at a commercial nuclear power plant. The other three events occurred at NRC-regulated medical institutions and are medical events as defined in Title 10 of the Code of Federal Regulations (10 CFR) part 35. The report also describes 19 events at Agreement State-licensed facilities. Agreement States are the 37 States that currently have entered into formal agreements with the NRC pursuant to Section 274 of the Atomic Energy Act (AEA) to regulate certain quantities of AEA-licensed material at facilities located within their borders. The first Agreement State-licensee event involved radiation exposure to an embryo/fetus, the second event involved an exposure to the extremities of a radiographer, and the third event involved a stolen radiography camera. The other 16 Agreement State-licensee events were medical events as defined in 10 CFR part 35 and occurred at medical institutions. As required by Section 208, the discussion for each event includes the date and place, the nature and probable consequences, the cause or causes, and the actions taken to prevent recurrence. Each event is also being described in NUREG–0090, Vol. 34, ''Report to Congress on Abnormal Occurrences: Fiscal Year 2011.'' This report is available electronically at the NRC's Web site at *http://www.nrc.gov/reading-rm/doc-collections/nuregs/staff/.*

Three major categories of events are reported in this document—I. For All Licensees, II. For Commercial Nuclear Power Plant Licensees, and III. Events at Facilities Other Than Nuclear Power Plants and All Transportation Events. The full report, which is available on the NRC's Web site, provides the specific criteria for determining when an event is an AO. It also discusses ''Other Events of Interest,'' which does not meet the AO criteria but has been determined by the Commission to be included in the report. The event identification number begins with ''AS'' for Agreement State AO events and ''NRC'' for NRC AO events.

I. For All Licensees

A. Human Exposure to Radiation From Licensed Material

During this reporting period, one event at an NRC-regulated facility and three events at Agreement State-licensed facilities were significant enough to be reported as AOs. Although two of these events occurred at medical facilities, they involved unintended exposures to individuals who were not patients. Therefore, these events belong under the Criteria I.A, ''For All Licensees,'' category as opposed to the Criteria III.C, ''For Medical Licensees,'' category.

NRC11–01 Human Exposure to Radiation at Portsmouth Naval Medical Center in Portsmouth, Virginia

Date and Place—January 12, 2011, Portsmouth, Virginia.

Nature and Probable Consequences—The U.S. Department of the Navy (the licensee) reported that a female patient at the Naval Medical Center in Portsmouth, Virginia (NMCP), received 3,630 MBq (98 mCi) of iodine-131 for thyroid ablation therapy. On the day of the treatment the patient informed NMCP staff that she was not pregnant and NMCP staff administered a pregnancy test as a routine precaution. The pregnancy test yielded a negative result. Based on the negative pregnancy test results and the patient's interview responses, NMCP staff administered iodine-131 to the patient.

On January 27, 2011, the patient became aware that she was pregnant and informed the physician who had administered the treatment. An obstetrician estimated that conception had occurred somewhere around January 7–10, 2011, and that a pregnancy test administered on January 12, 2011, would not have been sensitive enough to produce a positive result. The NMCP estimated the dose to the embryo to be 21.3 cGy (21.3 rem) and notified the Naval Radiation Safety Committee that the patient may have been pregnant before the therapy. The NMCP staff estimated a slight increased risk of early pregnancy failure and this was discussed with the patient. The NMCP staff subsequently refined the dose estimate to 24.7 cGy (24.7 rem). The NRC contracted with a medical consultant who estimated a fetal/embryo dose of 27 cGy (27 rem) and stated that embryonic tissue capable of concentrating iodine-131 is not formed until 10 to 12 weeks of gestation; therefore, the tissue had not yet formed at the time of the treatment. The medical consultant concluded that there was a low possibility of carcinogenesis or malformations.

Cause(s)—The cause of this event was the close proximity of conception, which resulted in a negative pregnancy test result, to the administration of the iodine-131.

Actions Taken To Prevent Recurrence

Licensee—The NMCP revised the initial consultation procedures for the prescribing physician to stress the importance of discussing with the patient the need for sexual abstinence at least 10 days before therapeutic dose administration.

NRC—The NRC conducted an inspection on February 2, 2011, through June 2, 2011, and there were no violations of the NRC's requirements associated with this event.

AS11–01 Human Exposure to Radiation at Montefiore Medical Center in New York City, New York

Date and Place—September 22, 2006 (reported on April 27, 2011), New York City, New York.

Nature and Probable Consequences—Montefiore Medical Center (the licensee) reported that a female patient received 3,519 MBq (95 mCi) of iodine-131 for thyroid ablation therapy. Before the treatment, the licensee interviewed the patient and ascertained that she was not pregnant. The licensee's staff administered a pregnancy test as a routine precaution. The pregnancy test yielded a negative result. Based on the negative pregnancy test results and the patient's interview responses, the licensee administered iodine-131 to the patient.

On December 22, 2006, the patient returned to the licensee for a followup visit. Following that visit, the nuclear medicine department staff was informed by another section of the medical center that the patient was pregnant. The licensee confirmed the pregnancy with the patient's obstetrician/gynecologist. The ultrasound performed by the patient's obstetrician/gynecologist revealed that the patient was approximately 2–3 weeks pregnant at the time of the iodine-131 treatment. The licensee estimated that the fetus received about 25 cGy (25 rem) of radiation exposure and stated that embryonic tissue capable of concentrating iodine-131 is not formed until 10 to 12 weeks of gestation; therefore, this tissue had not yet fully formed at the time of the treatment. The patient was advised to see a genetic specialist to discuss the possible consequences to the fetus from this exposure. Although the licensee claimed that it had originally reported the event to the New York City Office of Radiological Health in 2006, the

office had no record of the report. The New York City Office of Radiological Health identified the missing report in April 2011, and subsequently notified the NRC on June 15, 2011.

Cause(s)—The cause of this event was the close proximity of conception to the iodine-131 treatment and a false negative result on a pregnancy test done before the administration of the treatment.

Actions Taken To Prevent Recurrence

Licensee—The licensee's corrective actions included additions to its Safety Precaution Form stressing the necessity of sexual abstinence before the treatment and recommending that patients also take precautions to avoid getting pregnant for 6 months after the treatment.

State—The New York City Office of Radiological Health conducted an inspection on June 16, 2011, and determined that the licensee had followed acceptable protocols before the administration of iodine-131. Consequently no civil penalties or enforcement action for this event are warranted.

AS11–02 Human Exposure to Radiation at Caribbean Inspection & NDT Services, Inc., in Port Lavaca, Texas

Date and Place—September 12, 2011, Port Lavaca, Texas.

Nature and Probable Consequences—Caribbean Inspection & NDT Services Inc. (the licensee) reported that a radiographer trainee received an overexposure to his right hand and was seeking medical attention. The radiographer trainee stated that on September 12, 2011, while conducting radiography operations in the field, he removed a radiography camera guide tube from the Amersham 660 D radiography camera. The radiographer trainee stated that he noticed the 2.7 TBq (73 Ci) iridium-192 source was not fully retracted and protruding from the camera about 2 inches. The radiographer trainee stated that he may have brushed the source with his hand when he removed the guide tube.

On September 19, 2011, the radiographer trainee presented himself to a Houston, Texas hospital with observable deterministic effects, which included blistering of the thumb, index and middle fingers. These types of effects correspond to an exposure range of 20–40 Sv (2000 to 4000 rem) to the extremities. His doctors initially conferred with the Radiation Emergency Assistance Center/Training Site in Oak Ridge, TN regarding his medical treatment. The trainee is continuing his treatment at the Houston, Texas hospital as an out-patient. The licensee stated that the results of the trainee's dosimeter indicated that he received 14.1 mSv (1.41 rem) whole body exposure based on the film badge he was wearing at the time of the event.

Cause(s)—The State of Texas is currently investigating the cause of this event.

Actions Taken To Prevent Recurrence

Licensee—The licensee is conducting an investigation to determine the exact nature and cause of this event. Pending the results of this investigation the licensee will determine corrective action and inform the State of the circumstances of the event and the corrective actions.

State—Texas Department of State Health Services, Radiation Control Program is currently investigating this incident, which includes collecting information from the physicians, the licensee, and the individuals involved in the event. Pending the results of this investigation and the depositions performed through the General Counsel, the Texas Department of State Health Services will determine the probable causes of the event and review the licensee's corrective actions and consider what, if any, civil penalties and enforcement actions to pursue.

AS11–03 Stolen Radiography Camera at Acuren Inspection, Inc., in La Porte, Texas

Date and Place—July 19, 2011, La Porte, Texas.

Nature and Probable Consequences—Acuren Inspections Inc. (the licensee) reported the theft of a radiography camera containing 1.25 GBq (33.7 Ci) of iridium-192. On July 19, 2011, the licensee discovered that their radiography truck had been broken into, and the radiography camera, associated equipment, and portable generator had been stolen. The alarm system on the truck was then tested and determined to be operational; however, the alarm had not been set at the time of the theft. Attempts to locate the camera included the use of portable radiation detection equipment on vehicles, Austin Police Department/6 Civil Support Team helicopter flyovers of the area, and a U.S. Department of Energy fly-over survey between the cities of Austin and San Antonio, using a fixed wing plane.

It should be noted that at the time this event was reported to the NRC, the radioactive material in the camera was at a level considered to be risk-significant. However, as of October 1, 2011, the radioactive material had decayed to a level considered to not be risk-significant. The radioactive source has not been recovered at the time of this report.

Cause(s)—Licensee failure to use the vehicle alarm system.

Actions Taken To Prevent Recurrence

Licensee—The licensee conducted a company-wide review of the incident with all employees, inspected all their trucks to verify the alarm systems were operating, and required all employees to view a video that showed the proper way to lock and secure radioactive material.

State—The Texas Department of State Health Services conducted an inspection on July 21, 2011, and determined that the radiographer had failed to activate the alarm system on the truck containing the radiography camera. The licensee and the radiographers involved were cited for the violation.

II. Commercial Nuclear Power Plant Licensees

During this reporting period, one event at a commercial nuclear power plant in the United States was significant enough to be reported as an AO.

NRC11–02 Commercial Nuclear Power Plant Event at Browns Ferry Nuclear Plant, Unit 1, in Athens, Alabama

Date and Place—October 23, 2010, Athens, Alabama.

Nature and Probable Consequences—The Tennessee Valley Authority (TVA) (the licensee) reported a commercial nuclear power plant event at Browns Ferry Nuclear Plant, Unit 1, a boiling-water reactor designed by General Electric. On October 23, 2010, during a refueling outage, it was discovered that a residual heat removal (RHR) low pressure coolant injection (LPCI) flow control valve failed while the licensee was attempting to establish shutdown cooling. The flow control portion of the valve, called the disc, was found stuck in the seat of the valve. The disc had become separated from the valve stem and could no longer be controlled by the valve motor operator. The RHR system is primarily used for LPCI during accident conditions and for cooling while the reactor is shut down. As a result of the flow control valve failure, Loop II of the RHR system could not have performed its safe shutdown functions and was declared inoperable. The licensee promptly placed the other loop of the RHR system (Loop I) into service and, as a result, the failure of the flow control valve did not involve an actual safety consequence or impact the health and safety of the public.

However, the NRC reviewed this event under its significance determination process and determined that the licensee's history with regards to this valve performance issue represented a finding of high safety significance (red finding). The basis for this finding was that the flow control valve's failure (condition) caused a weakness in the licensee's fire mitigation strategy, resulting in a significant increase in the core damage frequency. The licensee's fire mitigation strategy limits the availability of alternative sources of reactor coolant inventory makeup and both loops of LPCI could potentially be unavailable in some accident scenarios. Automatic valve function was lost, as well as the ability of plant operators to manually use this loop of the RHR system.

The public was never actually endangered because no event requiring use of the RHR system occurred. However, the RHR system is counted on for core cooling during certain accident scenarios, and the flow control valve failure left it inoperable, which could have led to core damage had an accident involving a series of unlikely events occurred. The NRC determined that this event did not represent an immediate safety concern, because the licensee staff had, as part of its immediate corrective actions, implemented repairs and modifications in accordance with design requirements that returned the flow control valve to an operational condition (the red finding was for licensee performance deficiencies resulting in a past inoperability).

Cause(s)—The immediate cause for this condition was separation of the valve disc from the stem/skirt, with the disc wedged into the seat in the closed position. The licensee determined that part of the root cause was a valve manufacturing defect that resulted in undersized disc skirt threads at the disc connection to the valve stem. In addition, the NRC identified several other performance deficiencies on the part of the licensee. Specifically, the NRC determined that the licensee's failure to establish adequate programs to ensure that motor-operated valves continue to be capable of performing their design-basis safety functions was a performance deficiency. The NRC also concluded that TVA should have foreseen the results of not including these valves within the scope of the program described in Generic Letter 89–10, ''Safety-Related Motor-Operated Valve Testing and Surveillance,'' dated June 28, 1989, and should have corrected the problem. This failure to effectively maintain and inspect these valves within the program contributed to the performance deficiency. The licensee's corrective action program and root cause evaluation also did not appear to address the broader issues associated with programs to ensure the continued capability of motor-operated valves to perform their design-basis safety function.

Actions Taken To Prevent Recurrence

Licensee—The TVA reported this condition under 10 CFR 50.73, ''Licensee Event Reporting System,'' and under 10 CFR part 21, ''Reporting of Defects and Noncompliance Process.'' In addition, TVA has presented corrective actions related to the flow control valve failure and corrective actions that are planned to address long-term fire strategies at the Browns Ferry Nuclear Power Station. The flow control valve was repaired promptly, and inspections were performed on all similar valves for Units 1, 2, and 3 to verify their functional capability. The TVA informed the NRC of plans to reduce operator manual actions; implement procedural changes related to fire strategy; install modifications as a result of its review of National Fire Protection Association Standard 805, ''Performance-Based Standard for Fire Protection for Light Water Reactor Electric Generating Plants,'' and continue to reduce fire risk at the station.

NRC—The NRC assessed the performance of Browns Ferry Nuclear Power Station, Unit 1, to be in the Multiple/Repetitive Degraded Cornerstone Column of the NRC's Action Matrix beginning in the fourth quarter of Calendar Year 2010. This finding resulted in increased NRC oversight at Browns Ferry Nuclear Power Station, including a supplemental inspection to evaluate safety, organizational, and programmatic issues at the plant. The NRC staff initiated the supplemental inspection at the Browns Ferry Nuclear Power Station beginning on September 12, 2011. This inspection is being conducted in accordance with inspection procedures, and will include extensive reviews of programs and processes not inspected as part of the NRC's baseline inspection program. The inspection will also include an assessment of the Browns Ferry Nuclear Power Station's safety culture. Part 1 of this supplemental inspection was completed and an inspection report was issued on November 17, 2011 (available at Agencywide Documents Access and Management System (ADAMS) Accession No. *ML113210602*). The results of this inspection will be combined with the results from Parts 2 and 3 of the Browns Ferry Inspection Procedure 95003 (available at ADAMS Accession No. *ML102020551*), and will assist the NRC in determining the breadth and depth of safety, organizational, and programmatic issues at Browns Ferry Nuclear Power Station. The NRC will report on the final supplemental inspection results as part of the FY 2012 AO report to Congress.

III. Events at Facilities Other Than Nuclear Power Plants and All Transportation Events

C. Medical Licensees

During this reporting period, three events at NRC-licensed or NRC-regulated facilities and 16 events at Agreement State-licensed facilities were significant enough to be reported as AOs.

AS11–04 Medical Event at Western Pennsylvania Hospital in Allegheny, Pennsylvania

Date and Place—February 23, 2009, Allegheny, Pennsylvania.

Nature and Probable Consequences—The Western Pennsylvania Hospital (the licensee) reported that a medical event occurred associated with a high-dose-rate (HDR) mammosite treatment for breast cancer; the treatment consisted of 184.2 GBq (4.9 Ci) of iridium-192. The patient was prescribed to receive 34 Gy (3,400 rad) in 10 fractionated doses, but instead, received a dose of 50 Gy (5,000 rad) to the skin tissue around the catheter entry point (wrong treatment site). The patient's physicist notified the patient and the referring physician of this event.

Before starting the treatment on February 23, 2009, the medical staff performed a check to verify the catheter length and treatment calculations. In addition, the treatment procedure required daily CT scans to verify the treatment site. On February 27, 2009, a different therapy physicist identified a potential error in the patient's chart and contacted the patient's physicist. On March 3, 2009, the patient's physicist checked the other therapy physicist's findings and discovered there had been a 3 cm error in the placement of the source during treatment. This incorrect distance resulted in the intended site receiving only 30 percent of the intended dose and the skin tissue receiving the full dose. The patient received followup care for erythema of the skin tissue and the licensee concluded that this medical event would not have a significant medical effect on the patient.

Cause(s)—The medical event was caused by human error in the placement of the source during treatment.

Actions Taken To Prevent Recurrence

Licensee—The licensee revised all mammosite policies and procedures to strengthen the accuracy of measurement, planning, treatment, and quality control. Specifically, the licensee modified the mammosite worksheet to add the expected catheter length beside the block where the measured catheter length is recorded, and required that the catheter measurement wire be kept in place during CT simulation following catheter measurement.

State—The Pennsylvania Department of Environmental Protection investigated the incident on March 18, 2009, and determined that the licensee's corrective actions were adequate. No enforcement action was taken and the State forwarded the final update of the event to the NRC on November 14, 2011.

AS11–05 Medical Event at the University of Pennsylvania in Philadelphia, Pennsylvania

Date and Place—January 21, 2010, Philadelphia, Pennsylvania.

Nature and Probable Consequences—The University of Pennsylvania (the licensee) reported that a medical event occurred associated with a brachytherapy seed implant procedure to treat prostate cancer. The patient was prescribed to receive a total dose of 145 Gy (14,500 rad) to the prostate using 65 iodine-125 seeds. Instead, the seeds were inadvertently placed outside the intended treatment site (wrong treatment site). The patient received an approximate dose of 161 Gy (16,100 rad) to the penile bulb (glans) (wrong treatment site). The patient and referring physician were informed of this event.

On January 21, 2010, the iodine-125 seeds were implanted in the patient's prostate using real time dosimetry under ultrasonic guidance. The written directive called for a therapeutic radiation dose of 145 Gy (14,500 rad) to the prostate volume, plus 5 mm of margin. On February 23, 2010, the patient returned for a 30 day post implant CT scan, which revealed that the implanted seeds were ''in an appropriate pattern,'' but outside the intended target volume, which resulted in unintended dose to the penile bulb (glans). The licensee concluded that the medical event would not have a significant medical effect on the patient.

Cause(s)—The medical event is presumed to have been caused by misuse of a new ultrasound unit.

Actions Taken To Prevent Recurrence

Licensee—The licensee's Radiation Oncology Department suspended all prostate brachytherapy treatments pending an additional quality assurance review. Upon completion of the quality assurance review, the licensee modified its prostate brachytherapy treatment procedures. As of January 2012, the licensee has not yet resumed prostate brachytherapy treatments after implementation of these modified procedures.

State—The Pennsylvania Department of Environmental Protection investigated the incident on April 15, 2010, and determined that the licensee's corrective actions were adequate. No enforcement action was taken and the State forwarded the final update of the event to the NRC on November 14, 2011.

AS11–06 Medical Event at University Community Hospital in Tampa, Florida

Date and Place—February 14, 2010, Tampa, Florida.

Nature and Probable Consequences—The University Community Hospital (the licensee) reported that two patients were prescribed single-channel HDR brachytherapy treatments of 34 Gy (3,400 rad). An actual average dose of 17 Gy (1,700 rad) to the first patient, and 26 Gy (2,600 rad) to the second patient, were delivered to the target area of the breast, and some parts of the planned volume received greater than 700 percent (first patient) and 220 percent (second patient) of the prescribed dose. In addition, other areas of the breast not in the target region received up to 136 Gy (13,600 rad) in the first patient and 75 Gy (7,500 rad) in the second patient. The maximum skin dose was calculated to be 42.5 Gy (4,250 rad) to the first patient and 75 Gy (7,500 rad) to the second patient. The patients and their referring physicians were informed of the events.

On February 14, 2010, the licensee noted that the source within the mammosite catheter was erroneously positioned approximately 2 to 2.5 cm away from the tumor. This was the result of the operator entering the wrong dwell position into the planning system. The licensee concluded that no significant adverse health effects to the patients are expected.

Cause(s)—The cause of the medical events was human error involving entering the wrong position of the reference end of the catheter into the planning system.

Actions Taken To Prevent Recurrence

Licensee—Corrective actions included implementing various quality assurance steps to ensure that the correct treatment calculations and data are used for future treatments. Additional procedural guidance will be created with detailed instructions.

State—The Florida Bureau of Radiation Control initiated an inspection on February 18, 2010. The State completed the inspection on March 1, 2010, and determined that the licensee's corrective actions were adequate. No enforcement action was taken and the State forwarded the final update of the event to the NRC on February 1, 2011.

AS11–07 Medical Event at Coral Springs Clinic in Coral Springs, Florida

Date and Place—March 11, 2010, Coral Springs, Florida.

Nature and Probable Consequences—The Coral Springs Clinic (the licensee) reported that a medical event occurred associated with an HDR brachytherapy treatment for basal cell carcinoma of the ear. The patient was prescribed 14 fractionated doses of 2.5 Gy (250 rad) to the ear, but instead, the patient received 22.5 Gy (2,250 rad) on the second fractionated treatment dose. The patient and referring physician were informed of this event.

While starting the treatment the radiation therapist accidentally pushed the incorrect button on the HDR device, which was the ''auto radiography'' button rather than the ''treatment'' button on the machine control console. This resulted in the patient receiving approximately 9 times the intended dose for that fraction of the treatment. Further treatments were canceled. The patient and doctor were notified of the incident. The licensee concluded that no significant health effects to the patient are expected as a result of this incorrect dose.

Cause(s)—The medical event was caused by human error in that the radiation therapist failed to push the correct button on the HDR device.

Actions Taken To Prevent Recurrence

Licensee—The licensee immediately disabled the autoradiograph function on the HDR and other similar devices. The licensee modified its procedures to include the use of an independent mechanical timer and provided additional training to its entire clinical staff.

State—The Florida Bureau of Radiation Control initiated an inspection on April 27, 2010, and determined that the licensee's corrective actions were adequate. No enforcement action was taken and the State forwarded the final update of the event to the NRC on October 10, 2011.

AS11–08 Medical Event at Rhode Island Hospital in Providence, Rhode Island

Date and Place—April 23, 2010, Providence, Rhode Island.

Nature and Probable Consequences—The Rhode Island Hospital (the licensee) reported that a medical event occurred during a thyroid diagnostic uptake scan. The patient was prescribed to receive 7.4 MBq (200 μCi) of iodine-123, but was administered 148 MBq (4 mCi) of iodine-131. The administration resulted in a dose of approximately 3,108 cGy (3,108 rad) to the patient's thyroid, rather than the estimated 7 cGy (7 rad) that would have resulted from the iodine-123 administration. The patient and referring physician were informed of this event.

The patient's physician handed the patient a written prescription for the iodine-123 scan, but the physician's office faxed an incorrect order to the hospital for an iodine-131 scan. On April 23, 2010, the patient presented the correct written prescription slip, for the iodine-123, to the licensee's admitting receptionist. The receptionist refused the written prescription, because she thought the hospital already had the correct prescription in its records. The patient was administered the iodine-131, and the whole body scan was performed. The nuclear medicine technologist noticed something was wrong based on the scan results. The impact of this event on the patient was not reported by the licensee.

Cause(s)—The cause of this medical event was human error and failure of the licensee staff to follow existing written procedures and protocols.

Actions Taken To Prevent Recurrence

Licensee—The licensee reviewed existing written protocols and training procedures used for the nuclear medicine technologists. The licensee's corrective actions included modifying the procedures and conducting refresher training for the nuclear medicine technologists. In addition, the licensee developed a thyroid interview and patient assessment history sheet and now requires a pathology report for all thyroid cancer patients before iodine-131 doses are administered.

State—The Rhode Island Department of Health, Radiation Control Program, conducted an investigation of this medical event on April 30 through May 20, 2010, and issued a Notice of Violation (NOV) to the licensee. The Rhode Island Department of Health also issued a regulatory citation regarding the licensee's failure to follow established procedures and forwarded the final update of the event to the NRC in September 2011.

AS11–09 Medical Event at Lovelace Medical Clinic in Albuquerque, New Mexico

Date and Place—May 4, 2010, Albuquerque, New Mexico.

Nature and Probable Consequences—The Lovelace Medical Clinic (the licensee) reported that a medical event occurred associated with an HDR brachytherapy treatment for endometrial carcinoma; the treatment consisted of 129.7 GBq (3.5 Ci) of iridium-192. The patient was prescribed to receive a total dose of 21 Gy (2,100 rad) in three fractionated doses to the vaginal cuff, but instead, the skin tissue on the patient's thigh received 30.6 Gy (3,060 rad). The patient and referring physician were informed of this event.

On May 4, 2010, the patient received the third fractionated dose of 7 Gy (700 rad) and, 1 week later, noticed the appearance of two somewhat painful dark spots on the skin of her thigh. On May 18, 2010, the patient notified the licensee of the appearance of the spots on her skin and was examined by the prescribing physician the next day. The prescribing physician did not diagnose the spots as radiation erythema at this time, but asked the patient to return for a followup examination approximately a week later. On May 26, 2010, the physician identified two circular areas with a diameter of approximately 1 cm, which were determined to be radiation erythema. The average skin dose to the patient's thigh was calculated to be 30.6 Gy (3,060 rad) and the thigh dose at a depth of 2.5 cm was calculated to be 4.08 Gy (408 rad). The licensee concluded that no long-term medical effects are expected for the patient.

Cause(s)—The medical event was caused by either improper placement or workers inadvertently moving the catheter while adjusting the patient for better alignment with the treatment device.

Actions Taken To Prevent Recurrence

Licensee—The licensee revised its procedures to ensure that the catheter is correctly positioned before the start of the treatment. In addition, the licensee required staff training to address the procedure updates.

State—The New Mexico Radiation Control Bureau is conducting a long-term investigation of the event and the licensee's corrective actions and is still considering what, if any, enforcement actions to pursue.

AS11–10 Medical Event at Lancaster General Hospital in Lancaster, Pennsylvania

Date and Place—June 3, 2010, Lancaster, Pennsylvania.

Nature and Probable Consequences—The Lancaster General Hospital (the licensee) reported that a medical event occurred associated with an HDR brachytherapy treatment for ovarian cancer; the treatment consisted of 310.8 GBq (8.4 Ci) iridium-192. The patient was prescribed to receive 7.2 Gy (720 rad) in five fractionated doses, but instead during one of the fractionated treatments received a dose of 19 Gy (1,900 rad) to the small bowel (wrong treatment site). The patient and referring physician were informed of this event.

On June 15, 2010, before starting the second treatment, the medical staff noted that an incorrect target area had been previously entered into the HDR device for the first treatment on June 3, 2010. The medical staff noted that the intended treatment area in the written directive differed from the actual area treated by approximately 3 cm. This error in treatment area resulted in a dose of 19 Gy (1,900 rad) to the small bowel. The licensee concluded that the medical event would not have a significant medical effect on the patient.

Cause(s)—The medical event was caused by human error in that the licensee entered the incorrect target area into the HDR device.

Actions Taken To Prevent Recurrence

Licensee—The licensee implemented corrective measures including procedure modifications to discontinue using the part of the HDR software that allows for treatment offsets to occur.

State—The Pennsylvania Department of Environmental Protection investigated the incident on June 21, 2010, and determined that the licensee's corrective actions were adequate. No enforcement action was taken and the State forwarded the final update of the event to the NRC on November 14, 2011.

AS11–11 Medical Event at the Greater Baltimore Medical Center in Baltimore, Maryland

Date and Place—July 9, 2010, Baltimore, Maryland.

Nature and Probable Consequences—The Greater Baltimore Medical Center (the licensee) reported that a medical event occurred associated with a manual brachytherapy treatment for cervical cancer. The patient was prescribed to receive 35 Gy (3,500 rad) to the cervix over the course of 73 hours using 1.635 GBq (44.2 mCi) of cesium-137. While the sources were being

inserted into the patient, one of the cesium-137 sources fell out of the Fletcher-Suit applicator and into the patient's hospital gown. Consequently, the skin tissue on the patient's buttocks received a dose of 10.5 Gy (1,050 rad) from the errant source. The patient and referring physician were informed of this event.

Sometime after the sources had been inserted into the patient, the patient removed the hospital gown, folded it, placed it with the trash, and donned a clean gown. On July 9, 2010, the oncologist and medical physicist removed the sources from the patient and discovered that one of the six sources was missing. The oncologist and radiation safety officer subsequently located the source wrapped in the soiled hospital gown in a bag designated for radioactive waste. The source was retrieved and transported back to the Radiation Oncology Department's source storage room. The licensee noticed no erythema of the patient's skin and concluded that no clinically significant side effects would be expected from the radiation exposure to the skin.

Cause(s)—The cause of the medical event was the failure of the source attachment to the applicator, coupled with failure of the licensee to establish appropriate procedures to prevent the occurrence of the medical event.

Actions Taken To Prevent Recurrence

Licensee—The licensee plans to discontinue the use of the Fletcher-Suit applicator used during this treatment and exclusively use the Fletcher-Suit-Delclos applicator. The licensee also plans to revise procedures for brachytherapy applicators and provide improved training to the staff.

State—The Maryland Department of the Environment, Radiological Health Program conducted an investigation on July 27, 2010, and August 18, 2010. On October 18, 2010, the Department issued a letter and NOV to the licensee and forwarded the final update of the event to the NRC in July 2011.

NRC11–03 Medical Event at the G.V. (Sonny) Montgomery VA Medical Center in Jackson, Mississippi

Date and Place—August 4, 2008 (reported on September 8, 2010), Jackson, Mississippi.

Nature and Probable Consequences—The U.S. Department of Veterans Affairs (the licensee) reported that a medical event involving prostate cancer brachytherapy seed implants occurred at the G.V. (Sonny) Montgomery VA Medical Center in Jackson, Mississippi. The patient was prescribed to receive a total dose of 145 Gy (14,500 rad) to the prostate using 104 iodine-125 seeds. However, the seed placement resulted in an approximate dose of 233 Gy (23,300 rad) to the patient's rectum (wrong treatment site). The patient and referring physician were informed of this event.

In September 2010, the medical center staff completed a followup comprehensive external review and reanalysis of posttreatment dose parameters for all prostate seed implants performed at the G.V. (Sonny) Montgomery VA Medical Center for the period between February 2005 and August 2008. Upon an evaluation of the updated dose information generated by external review, medical center staff, working with the National Health Physics Program, discovered this event. No adverse effect to the patient is expected from the implant procedure, and the licensee continues to monitor the progress of the patient.

Cause(s)—The cause of the medical event was an anatomical anomaly of the patient. The patient had an unusually thin tissue layer between the prostate gland and rectum, which resulted in a small area of the rectum receiving a higher than expected dose.

Actions Taken To Prevent Recurrence

Licensee—The U.S. Department of Veterans Affairs, working with the National Health Physics Program and the medical center's staff, performed an initial review of all prostate brachytherapy seed implant procedures for the period between February 2005 and August 2008. The initial review of this program resulted in the suspension of and eventual termination of the medical center's prostate brachytherapy implant program in August 2009. The followup comprehensive external review and reanalysis of the program identified this event, which the medical center reported to the licensee and the NRC.

NRC—In August 2010, the NRC issued an NOV and Proposed Imposition of Civil Penalties to the licensee, based on the results of the initial evaluation and analysis of several events associated with the licensee's prostate brachytherapy implant program. The licensee was cited for failure to have adequate written procedures and failure to verify that the administered doses were in accordance with written directives. The NRC has not taken any additional actions based on the identification of this event.

NRC11–04 Medical Event at Community Hospitals of Indiana in Indianapolis, Indiana

Date and Place—October 6, 2010, Indianapolis, Indiana.

Nature and Probable Consequences—The Community Hospitals of Indiana (the licensee) reported that a medical event occurred associated with an HDR brachytherapy treatment for breast cancer; the treatment consisted of 340.4 GBq (9.2 Ci) of iridium-192. The patient was prescribed to receive a total dose of 34 Gy (3,400 rad) in 10 fractionated doses to the postsurgical cavity in the left breast following excision of a cancerous tumor (treatment site). It was determined that the first eight treatment fractions resulted in a portion of the treatment site receiving a dose of 266 Gy (26,600 rad). In addition, a portion of the patient's skin on the left breast and the chest muscle tissue (tissue other than the treatment site) received doses of 105 Gy (10,500 rad) and 1,002 Gy (100,200 rad), respectively. The patient and referring physician were informed of this event.

On October 6, 2010, following the eighth fractionated treatment dose, an error was discovered in the treatment plan by the medical physicist who remembered that he had not changed a default entry in the treatment planning system. This error caused the source placement to be flipped 180 degrees along the applicator's long axis which resulted in a portion of the treatment site at the tip end of the applicator receiving less than the prescribed dose, and a portion of the treatment site at the connector end of the applicator receiving more than the prescribed dose. The licensee concluded that no long-term medical effects are expected for the patient. The NRC contracted with a medical consultant who determined that the overall impact to the patient is minimal.

Cause(s)—The medical event was caused by human error in that the medical physicist failed to change a default entry in the treatment planning system as required by the licensee's procedure.

Actions Taken To Prevent Recurrence

Licensee—The licensee revised its written directive form to remind staff to change the default entry in the treatment planning system as applicable, added a step to its procedure for multicatheter HDR breast treatments to verify that the default was changed as applicable, and trained its staff on the revised written directive form. In addition, the licensee evaluated all of the other HDR breast treatments that

were conducted in 2010 to verify that the applicators were accurately reconstructed in the treatment planning computer.

NRC—The NRC conducted a reactive inspection on October 18–20, 2010, with continued in-office review through January 18, 2011, and issued two NOVs to the licensee on March 1, 2011, and April 20, 2011, respectively.

AS11–12 Medical Event at Cleveland Clinic Foundation in Cleveland, Ohio

Date and Place—October 26, 2010, Cleveland, Ohio.

Nature and Probable Consequences—The Cleveland Clinic Foundation (the licensee) reported, to the Ohio Department of Health (ODH) that a medical event occurred associated with a radioembolization brachytherapy treatment for liver cancer; the treatment consisted of 3.96 GBq (107 mCi) of yttrium-90. A postprocedure scan of the patient identified significant undesired activity in the duodenum (wrong treatment site). The licensee estimated that approximately 0.37 GBq (10 mCi) of activity was present in the duodenum, with a dose to the duodenum of approximately 90 Gy (9,000 rad). The patient and physician were informed of this event.

Approximately 3 weeks before the therapy, the patient was scanned for extra hepatic shunting by injecting technetium-99m into the hepatic artery. No shunting to the duodenum was identified during this procedure. On October 26, 2010, the interventional radiologist correctly inserted the catheter into the patient and its placement was confirmed by a second interventional radiologist. During the radioembolization treatment, the patient complained of pain, which resulted in the medical staff performing a postprocedure SPECT/CT scan of the patient. The SPECT/CT scan identified undesired yttrium-90 activity in the duodenum. The patient was hospitalized for observation and possible intervention as a result of the dose to the duodenum. Some ulceration of the duodenum bulb was observed, but no evidence of perforation or bleeding was detected. The licensee is continuing to monitor the patient for health effects from the radiation exposure.

Cause(s)—The licensee reported that the cause of the medical event was that some collateral blood vessels became dominant and blood was shunted through them to the duodenum, allowing movement of the yttrium-90 microspheres. Although the licensee has not seen this relatively uncommon occurrence in the past 3 years, it has been noted in other treatment cases.

Actions Taken To Prevent Recurrence

Licensee—The licensee modified its radioembolization therapy procedure to include posttreatment imaging of yttrium-90 distribution. This will allow the licensee to respond appropriately in the event of a recurrence. The licensee's rate of occurrence is approximately 10 times less than is reported in medical literature; therefore, no specific action to prevent a reoccurrence is proposed.

State—On November 3, 2010, The ODH performed an onsite investigation of the event. The ODH reviewed and approved the licensee's corrective actions and took no enforcement action.

AS11–13 Medical Event at Rush University Medical Center in Chicago, Illinois

Date and Place—November 23, 2010, Chicago, Illinois.

Nature and Probable Consequences—The Rush University Medical Center (the licensee) reported that a medical event occurred associated with a brachytherapy seed implant procedure to treat prostate cancer. The patient was prescribed to receive a total dose of 145 Gy (14,500 rad) to the prostate using 102 iodine-125 seeds. Instead, the seeds were placed 4–5 cm inferior of the treatment plan (wrong treatment site). The patient received an approximate dose of 273.5 Gy (27,350 rad), 112 Gy (11, 200 rad), and 183 Gy (18,300 rad) to the urethra, perineum, and penile bulb (glans), respectively. The patient and referring physician were informed of this event.

During the treatment, the iodine-125 seeds were manually inserted into the prostate needle template via ultrasound imaging. Visualization of the seed placement in the postimplantation scan was problematic for the licensee's staff; however, the staff's initial estimate of seed placement was that the seeds may have been inferior to the ideal placement, but still in an acceptable location. An additional posttreatment scan at the 4-week posttreatment mark indicated that the seeds were placed 4–5 cm inferior to the planned treatment site. The licensee surmised that the geometry of the template against the patient's perineum shifted during the procedure, and pulled away from the patient, perhaps due to leg movement or coughing. This placement resulted in an elevated dose to the patient's urethra, perineum, and penile bulb (glans). The licensee concluded that there were no observed medical effects to the patient, and no long-term significant complications are expected.

Cause(s)—The cause of the medical event was the engorgement of the prostate gland and surrounding tissue, which made the visualization and placement of the seeds difficult during the implantation procedure.

Actions Taken To Prevent Recurrence

Licensee—The licensee has indicated that these procedures will now be conducted only where fluoroscopic imaging can be performed to provide better ''real time'' imaging of seed placement, in addition to transrectal ultrasound. Needle unloading procedures have been modified, and ultrasound equipment quality assurance tests have been added before each procedure.

State—The Illinois Emergency Management Agency (IEMA) conducted an onsite investigation. The IEMA reviewed the event and other similar treatment procedures at the facility and determined that this event was an isolated incident. The IEMA approved the licensee's corrective actions, and issued no citations or enforcement actions at the conclusion of the investigation.

AS11–14 Medical Event at the University of Texas Southwestern Medical Center in Dallas, Texas

Date and Place—July 30, 2010, and September 16, 2010 (reported on February 15, 2011), Dallas, Texas.

Nature and Probable Consequences—The University of Texas Southwestern Medical Center (the licensee) reported the occurrence of a medical event to two young adult patients prescribed colloidal phosphorus-32 (ranging from 7.4 MBq (0.2 mCi) to 92.5 MBq (2.5 mCi) of activity) for treatment of cranial cysts. The patients were prescribed to receive a total dose of 300 Gy (30,000 rad) and 200 Gy (20,000 rad) respectively, but instead the patients received an approximate dose of 565 Gy (56,500 rad) and 506 Gy (50,600 rad) to the cysts. These dosages were 88 and 153 percent greater than the prescribed dosages. The patients and referring physicians were informed of these events.

On February 15, 2011, the licensee discovered that two young adult patients were administered doses of phosphorus-32 greater than 50 percent of the prescribed doses. The incidents were discovered when the authorized user noticed an area of inflammation surrounding the cysts and along the track of the drainage catheter. The authorized user discussed these findings with the staff medical physicist who reviewed the colloidal phosphorus-32 doses supplied by the nuclear pharmacy. The licensee determined that

for both cases, the labels had the correct total activity, but the incorrect volume and activity per unit volume. Therefore, the doses were incorrectly labeled, and the concentration was approximately 60 percent higher than indicated on the labels. The licensee subsequently calculated the doses to the target and surrounding tissues and does not expect any patient impact or unfavorable outcomes as a result of these events.

Cause(s)—The cause of the medical event was that the two colloidal phosphorus-32 prescriptions provided by the vendor's nuclear pharmacy were incorrectly diluted and labeled. In addition, the licensee did not perform a verification assay of the doses before their administration.

Actions Taken To Prevent Recurrence

Licensee—To prevent recurrence, the licensee will obtain future doses that have been calibrated to a National Institute of Standards and Technology traceable standard. The licensee also will perform a verification assay at its facility and will assess the dose volume for calculating the specific activity.

State—On March 1, 2011, the Texas Department of State Health Services conducted an inspection and reviewed the causes and the licensee's corrective actions. The licensee was cited for a violation for failing to perform a direct measurement of the dosage taken from a bulk quantity for medical purposes.

NRC11–05 Medical Event at the University of Michigan Hospital in Ann Arbor, Michigan

Date and Place—March 9, 2011, Ann Arbor, Michigan.

Nature and Probable Consequences—The University of Michigan Hospital (the licensee) reported that a medical event occurred associated with a radioembolization brachytherapy treatment of liver cancer; the treatment consisted of 2.24 GBq (60.5 mCi) of yttrium-90. The patient was prescribed to receive a total dose of 74.4 Gy (7,440 rad) to the left lobe of the liver, but instead, the patient received an approximate dose of 159.4 Gy (15,940 rad). This dosage was in excess of 100 percent of the prescribed dosage to the patient. The patient and referring physician were informed of this event.

On March 9, 2011, before the treatment, the licensee's medical physicist calculated the activity needed for the dose to the left lobe of the liver. The medical physicist's calculations used the liver segment volumes for the right lobe and medial segment combined, instead of the much smaller left lobe. As a result of the volume calculation error, the dose to the left lobe of the liver was 159.4 Gy (15,940 rad), which was in excess of 100 percent of the prescribed dose. The licensee concluded that the elevated radiation dose to the patient's liver will not result in permanent medical damage or loss of function. The NRC contracted with a medical consultant who concluded that the administered dose is unlikely to result in any significant adverse effects.

Cause(s)—The NRC determined that the root cause of the medical event was a lack of communication between licensee personnel which resulted in an inaccurate written directive and subsequent medical event.

Actions Taken To Prevent Recurrence

Licensee—The licensee modified procedures by adding reviews of treatment plans to ensure that written directives properly reflect the treatment plan.

NRC—The NRC conducted an inspection on March 15 and 16, 2011, and reviewed the licensee's corrective actions. On January 6, 2012, NRC issued an NOV for failure to possess adequate procedures resulting in the medical event.

AS11–15 Medical Event at Abbott Northwestern Hospital in Minneapolis, Minnesota

Date and Place—March 17, 2011, Minneapolis, Minnesota.

Nature and Probable Consequences—The Abbott Northwestern Hospital (the licensee) reported that a medical event occurred associated with a radioembolization brachytherapy treatment of liver cancer; the treatment consisted of 1.11 GBq (29.97 mCi) of yttrium-90. The patient was prescribed to receive a total dose of 30.8 Gy (3,080 rad) to the liver, but instead, the patient received an approximate dose of 46.1 Gy (4,610 rad). This delivered dosage was about 150 percent of the prescribed dosage to the patient. The patient and referring physician were informed of this event.

On March 18, 2011, after reviewing the treatment procedure from the previous day, the licensee's radiation oncologist discovered that the dose delivered to the patient's liver was actually 150 percent of the prescribed dose. For further clarification, the radiation oncologist brought this error to the attention of the lead medical physicist responsible for the patient's treatment delivery. Upon investigation, it was deduced that the medical physicist had not read the patient's therapy written directive prescription correctly, resulting in a higher than intended dosage being administered to the patient's liver. The licensee's radiation oncologist and interventional radiologist concluded that this elevated dose would slightly increase the patient's risk of radiation-induced liver disease.

Cause(s)—The medical event is believed to have been caused by human error in failing to correctly read the therapy written directive prescription.

Actions Taken To Prevent Recurrence

Licensee—The licensee implemented corrective measures, including increasing the font and highlighting in a different color the final dose on the written directive. In addition, the final dose is now transferred automatically rather than manually to the spreadsheet workbook used to draw up the dose. Also, procedures now require a second individual to verify that the correct prescribed activity has been transferred to the worksheet used for drawing up the dose.

State—The Minnesota Department of Health (MDH) conducted an investigation on April 5, 2011. During the investigation, MDH met with the radiation safety officer, the medical physicist and both radiation oncologists involved with the incident, and several members of the licensee administrative team. In addition, MDH reviewed the corrective actions implemented by the licensee. The MDH did not issue any violations or penalties associated with the event; however, MDH will evaluate the licensee's corrective actions at its next inspection.

AS11–16 Medical Event at the University of California, Los Angeles in Los Angeles, California

Date and Place—April 4, 2011, Los Angeles, California.

Nature and Probable Consequences—The University of California, Los Angeles (UCLA) (the licensee) reported the occurrence of a medical event associated with a brachytherapy seed implant procedure to treat prostate cancer. The patient was prescribed a dose of 144 Gy (14,400 rad) to the prostate using 101 iodine-125 seeds. Instead, the iodine-125 seeds were implanted inferior to the target volume (wrong treatment site), resulting in a dose to this tissue of 144 Gy (14,400 rad). The patient and referring physician were informed of this event.

On May 3, 2011, the patient returned to the UCLA Department of Radiation Oncology for a routine postimplant CT scan to verify seed placement and final dosimetry endpoints. The routine postimplant CT scan indicated that of the 101 total seeds implanted, approximately 72 seeds had been placed inferior to the target volume. As a result

of the seed misplacements, approximately 31 cm^3 of normal tissue inferior to the prostate received at least 144 Gy (14,400 rad) instead of the prostate tissue receiving that dose. Rectal and bladder doses were not significantly impacted by the seed misplacements and remained within typical doses for prostate implants. The licensee concluded that there was no harm to the patient from doses to the nontargeted tissue.

Cause(s)—The licensee reported that the cause of the medical event was movement of the prostate gland during the implantation procedure, coupled with insufficient ultrasound images needed to identify the movement of the prostate gland during the procedure.

Actions Taken To Prevent Recurrence

Licensee—The licensee temporarily placed the permanent prostate seed implantation program on hold pending a review of the procedures. Upon completion of the review the licensee changed the implant procedure to require the verification of the base prostate plane and needle placement using both axial and sagittal plane ultrasound views. The licensee also did an internal investigation to determine if any similar incidents of seed misplacements had occurred in the past and reported that postimplant CT had been performed for at least the previous 5 to 6 years without the detection of any significant seed misplacement events.

State—The California Radiation Control Program investigated the event and issued violations for failing to have adequate prostate seed implantation procedures, failing to report the medical event within 24 hours of discovery, failing to provide a written report with all of the required information for the medical event within 15 days, and failing to have procedures and to adequately train staff and authorized users for reporting of medical events.

AS11–17 Medical Event at St. Vincent Hospital in Green Bay, Wisconsin

Date and Place—May 15, 2011, Green Bay, Wisconsin.

Nature and Probable Consequences—The St. Vincent Hospital (the licensee) reported that a medical event occurred associated with HDR brachytherapy treatment for breast cancer; the treatment consisted of 318.2 GBq (8.6 Ci) of iridium-192. The patient was prescribed to receive a total dose of 34 Gy (3,400 rad) over 10 fractionated treatments. Instead, the patient received 8.84 Gy (884 rad) to the tumor site and a dose of 67.5 Gy (6,750 rad) to unintended skin tissue. The patient and referring physician were informed of this event.

On June 6, 2011, the licensee determined that the applicator catheter lengths measured using the check ruler were incorrect during the breast cancer treatment. The licensee ascertained that the incorrect measurement was the result of the wire being caught at the apex of the curved catheter, approximately 4.5 cm from of the end of the catheter. Members of the licensee's staff assumed that this measured length was accurate because they were not aware of the nominal catheter length. The Wisconsin Department of Health Services verified that the nominal catheter length was not provided in the manufacturer's written procedure, and the manufacturer determined that the check wire used by the licensee met all design specifications. The licensee concluded that there were no observed significant adverse effects to the patient, and no long-term significant complications are expected.

Cause(s)—The cause of the medical event was human error in the failure to identify that the check wire was not inserted to the end of the catheter's lumen and failure to identify an incorrect measurement length.

Actions Taken To Prevent Recurrence

Licensee—Corrective actions include obtaining a new measurement wire that has the same flexible tip as the HDR dummy wire. The treatment protocol was changed to incorporate the manufacturer's expected applicator treatment distances. In addition, the licensee developed a new policy and procedure, which emphasizes the due diligence required by the staff before the first clinical use of new HDR treatment applicators and guide tubes.

State—Based on its investigation conducted on June 14, 2011, the Wisconsin Department of Health Services cited the licensee for failure to develop, implement, and maintain written procedures to ensure that each administration is performed according to the provisions of the written directive.

AS11–18 Medical Event at the University of Wisconsin—Madison in Madison, Wisconsin

Date and Place—July 7, 2011, Madison, Wisconsin.

Nature and Probable Consequences—The University of Wisconsin—Madison (the licensee) reported that a medical event occurred associated with radioembolization brachytherapy treatment for liver cancer; the treatment consisted of 1.05 GBq (28.4 mCi) of yttrium-90. The patient was prescribed to receive a total dose of 120 Gy (12,000 rad) to the left lobe of the liver, but instead, the patient received an approximate dose of 41.8 Gy (4,180 rad) to the right lobe of the liver (wrong treatment site). The patient and referring physician were informed of this event.

On July 7, 2011, the patient was scheduled for treatment for multinodular hepatocellular carcinoma to the left lobe of the liver. The dosimetry for yttrium-90 radioembolization brachytherapy treatment was based on the volume (mass) of the left lobe. The written directive specified the treatment of the left lobe of the liver; however, the right lobe of the liver was treated in error. The licensee concluded that the dose received was not medically significant to the patient.

Cause(s)—The cause of the medical event was human error in not correctly following the treatment plan as documented on the written directive. The interventional radiologist forgot that he had changed the initial target of the procedure after the dose had been ordered and did not communicate that change to the rest of the staff.

Actions Taken To Prevent Recurrence

Licensee—Corrective actions include a series of checks developed to occur in the interventional radiology room before an administration. Checks include a verbal confirmation between the interventional radiologist and the medical physicist and confirmation of the patient name, target area, dose, and route of administration. This checklist is also compared to the written directive.

State—The Wisconsin Department of Health Services conducted a reactive inspection on August 12, 2011, and did not issue any violations to the licensee.

AS11–19 Medical Event at the Swedish American Hospital in Rockford, Illinois

Date and Place—September 13, 2011, Rockford, Illinois.

Nature and Probable Consequences—The Swedish American Hospital (the licensee) reported a medical event involving brachytherapy seed implant treatment for prostate cancer. The patient was prescribed a dose of 145 Gy (14,500 rad) to the prostate using 71 iodine-125 seeds. Instead, 68 of the iodine-125 seeds were implanted in the large bowel, the small bowel, and the bladder. The licensee calculated that the dose to the prostate was less than 1 Gy (100 rad), but the unintended dose to the large bowel was 10.2 Gy (1,020 rad). The patient and referring physician were informed of this event.

On September 15, 2011, postimplant imaging of the patient revealed that only three seeds were properly located in the prostate (target site), indicating a dose significantly less than the prescribed amount in the written directive. Postimplant imaging also revealed that seven seeds were in the bladder; these seeds were immediately removed. Additional postoperative imaging indicated that a number of seeds had been placed in the bowel wall, bladder wall, and the lumen of the bowel. On October 3, 2011, surgery was performed to remove misplaced seeds. All but four seeds were removed from the patient. With the removal of the seeds that the licensee was able to remove, the licensee concluded that the medical event would not have a significant effect on the patient.

Cause(s)—The cause of the medical event was a deviation from protocol by not having a medical physicist present during the procedure and not using fluoroscopy during needle placement.

Actions Taken To Prevent Recurrence

Licensee—Corrective actions include emphasizing strict adherence to prostate brachytherapy protocols.

State—The IEMA conducted an investigation on September 26, 2011, and verified the root cause of the event as reported by the licensee. The IEMA issued an NOV to the licensee regarding this failure to implement appropriate procedures.

Dated at Rockville, Maryland, this 15th day of June, 2012.

For the Nuclear Regulatory Commission.

Annette Vietti-Cook,

Secretary of the Commission.

[FR Doc. 2012–15172 Filed 6–20–12; 8:45 am]

BILLING CODE 7590–01–P

SECURITIES AND EXCHANGE COMMISSION

[Release No. 34–67207; File No. SR–CME–2012–21]

Self-Regulatory Organizations; Chicago Mercantile Exchange, Inc.; Notice of Filing and Order Granting Accelerated Approval of Proposed Rule Change To Amend CME Rule 971 Reporting Requirements for FCM Clearing Members

June 15, 2012.

Pursuant to Section 19(b)(1) of the Securities Exchange Act of 1934 (''Act'') [1] and Rule 19b-4 thereunder,[2] notice is hereby given that on June 7, 2012, the Chicago Mercantile Exchange Inc. (''CME'') filed with the Securities and Exchange Commission (''Commission'') the proposed rule change described in Items I and II below, which items have been prepared primarily by CME. The Commission is publishing this Notice and Order to solicit comments on the proposed rule change from interested persons and to approve the proposed rule change on an accelerated basis.

I. Self-Regulatory Organization's Statement of Terms of Substance of the Proposed Rule Change

CME proposes amendments to certain reporting requirements for futures commission merchant (''FCM'') clearing members. The enhanced reporting requirements are designed to further safeguard customer funds held at the FCM level. The text of the proposed changes is as follows with additions italicized and deletions in brackets.

* * * * *

Rule 100—Rule 970—No Change

* * * * *

CME Rule 971. SEGREGATION, SECURED AND SEQUESTERED REQUIREMENTS

A. All clearing members must comply with the requirements set forth in CFTC Regulations 1.20 through 1.30, 1.32, and 30.7, and CME Rules 8F100 through 8F136. This includes, but is not limited to, the following:

1. Maintaining sufficient funds *at all times* in segregation [or set aside in separate or]*, secured 30.7 and* sequestered accounts;

2. Computing, recording and reporting completely and accurately the balances in the:

a. Statement of Segregation Requirements and Funds in Segregation;

b. Statement of Secured Amounts and Funds Held in Separate Accounts; and

c. Statement of Sequestration Requirements and Funds Held in Sequestered Accounts.

3. Obtaining satisfactory segregation, [separate] *secured 30.7* and sequestered account acknowledgement letters and identifying segregated, [separate] *secured 30.7* and sequestered accounts as such; and

4. Preparing complete and materially accurate daily segregation, secured *30.7* and sequestered amount computations in a timely manner.

B. [Exchange staff may prescribe additional segregation, secured and sequestered amount requirements.] *All FCM clearing members must submit a daily segregated, secured 30.7 and sequestered amount statement, as applicable, through Exchange-approved electronic transmissions by 12:00 noon on the following business day.*

C. [All clearing members must provide written notice to the Audit Department of a failure to maintain sufficient funds in segregation or set-aside in separate or sequestered accounts. The Audit Department must receive immediate written notification when a clearing member knows or should have known of such failure.] *All FCM clearing members must submit a report of investments in a manner as prescribed through Exchange-approved electronic transmissions as of the 15th of the month (or the following business day if the 15th is a holiday or weekend) and last business day of the month by the close of business on the following business day. The report of investments shall be prepared and shall identify separately for segregated, secured 30.7 and sequestered funds held:*

1. The dollar amount of funds held in cash and each permitted investment identified in CFTC Regulation 1.25(a); and

2. The identity of each depository holding funds and the dollar amount held at each depository.

D. All disbursements not made for the benefit of a customer from a segregated, secured 30.7 or sequestered account which exceed 25% of the FCM clearing members excess segregated, secured 30.7 or sequestered of the respective origin must be pre-approved in writing by the clearing member's Chief Executive Officer or Chief Financial Officer.

1. In determining if a disbursement exceeds the 25% level, such disbursement must be:

a. Compared to the most recent calculation of excess segregated, secured 30.7 and sequestered amounts; and

b. A single disbursement must be reviewed individually and in the aggregated with all other disbursements not made for the benefit of a customer of the respective segregated, secured 30.7 or sequestered origin since the last calculation of excess funds.

2. Upon approval of a single disbursement or the disbursement which in the aggregated exceeds the 25% level as defined in Rule 971.D.1., the FCM clearing member must provide immediate notification to the Audit Department through Exchange-approved electronic transmissions. Such notification shall include:

a. Confirmation that the FCM clearing member's Chief Executive Officer or Chief Financial Officer pre-approved in writing the disbursement(s);

b. The amount(s) and recipient(s) of such disbursement(s); and

[1] 15 U.S.C. 78s(b)(1).

[2] 17 CFR 240.19b-4.

c. A description of the reasons for the single or multiple transaction(s) that resulted in the disbursement(s).

E. All clearing members must provide written notice to the Audit Department of a failure to maintain sufficient funds in segregation, secured 30.7 or sequestered accounts. The Audit Department must receive immediate written notification when a clearing member knows or should have known of such failure.

F. Each statement and report filing required under this Rule must be submitted by the Chief Executive Officer, Chief Financial Officer or their authorized representative as approved by CME using their assigned User Identification (''User ID''). The User ID will constitute and become a substitute for the manual signature of the authorized signer to the electronically submitted daily segregated, secured 30.7 and sequestered amount statements. The User ID is a representation by the authorized signer that, to the best of his or her knowledge, all information contained in the statement being transmitted under the User ID is true, correct and complete. The unauthorized use of a User ID for electronic attestation by an unauthorized party is expressly prohibited.

G. Exchange staff may prescribe additional segregation, secured 30.7 and sequestered amount requirements.

* * * * *

Rule 972—End—No Change

II. Self-Regulatory Organization's Statement of Purpose of, and Statutory Basis for, the Proposed Rule Change

In its filing with the Commission, CME included statements concerning the purpose and basis for the proposed rule change and discussed any comments it received on the proposed rule change. The text of these statements may be examined at the places specified in Item III below. CME has prepared summaries, set forth in sections A, B, and C below, of the most significant aspects of such statements.

A. Self-Regulatory Organization's Statement of Purpose of, and Statutory Basis for, the Proposed Rule Change

CME is registered as a derivatives clearing organization with the Commodity Futures Trading Commission (''CFTC'') and operates a substantial business clearing futures and swaps contracts subject to the jurisdiction of the CFTC. CME proposes to amend CME Rule 971 to impose additional reporting requirements for FCM clearing members that are designed to further safeguard customer funds held at the FCM level.

The proposed rule changes are being made in connection with certain recommendations developed by CME, the National Futures Association and the Futures Industry Association. The changes to the text of CME Rule 971 that are the subject of this filing can be summarized as follows:

- *Maintenance of Excess Segregated, Secured 30.7 and Sequestered Funds.* Revised Rule 971.A.1 clarifies that FCM clearing members must maintain excess segregated, secured 30.7 and ''sequestered'' (i.e., customer cleared swaps) funds at all times, including on an intra-day basis.
- *Daily Segregated, Secured 30.7 and Sequestered Statements.* Subparts B and F of revised Rule 971 require FCM clearing members to file daily segregated, secured 30.7 and sequestered statements, as applicable, through WinJammer, by 12:00 noon on the following business day. These daily statements must be electronically submitted and signed off by the firm's Chief Executive Officer, Chief Financial Officer or their designated representative, as approved by CME and as authorized on the User Identification Request Form.
- *Semi-monthly Investment Reports.* Revised Rule 971.C requires FCM clearing members to file semi-monthly reports reflecting how customer segregated, secured 30.7 and sequestered funds are invested and where those funds are held. The reports of investments will be filed electronically through WinJammer as of the 15th of the month and last day of the month.
- *Disbursement Approvals.* Rule 971.D requires all disbursements made by FCM clearing members of customer segregated, secured 30.7 or sequestered funds that are not made for the benefit of customers of the respective customer origin and that exceed 25% of the excess segregated, secured 30.7 or sequestered funds, as applicable, to be pre-approved in writing by the FCM's Chief Executive Officer or Chief Financial Officer. In determining if the 25% level has been exceeded, all such disbursements not made for the benefit of customers by customer origin should be aggregated and compared to the most current daily segregated, secured 30.7 and sequestered calculations, as applicable. In addition, CME must be immediately notified upon pre-approval of such disbursements through WinJammer notification filings, including a description of the nature of the disbursement(s) and confirmation of pre-approval.

CME notes that it previously announced certain of the enhanced reporting requirements described above when it issued Audit Information Bulletin (''AIB'') 12–04 on April 2, 2012. The AIB was filed with the Commission in SR–CME–2012–13.[3]

CME anticipates making the changes to Rule 971.C effective on July 1, 2012. CME anticipates making the changes to Rule 971.D effective at some point in the July 2012 time period. The other changes to Rule 971, the substance of which were addressed by CME's previous filing of AIB 12–04, are scheduled to become effective on June 14, 2012. CME also made a filing, CME Submission 12–178, with the CFTC with respect to the proposed changes.

CME believes the proposed changes are consistent with the requirements of the Act. First, CME, a derivatives clearing organization, is implementing the proposed changes in furtherance with applicable CFTC regulations and Commodity Exchange Act (''CEA''), which contains a number of provisions that are comparable to the policies underlying the Act, including, for example, promoting market transparency for derivatives markets, promoting the prompt and accurate clearance of transactions and protecting investors and the public interest. Second, CME believes the proposed changes are specifically designed to protect investors and the public interest because the requirements help safeguard customer funds held at the FCM level.

B. Self-Regulatory Organization's Statement on Burden on Competition

CME does not believe that the proposed rule change will have any impact or impose any burden on competition.

C. Self-Regulatory Organization's Statement on Comments on the Proposed Rule Change Received From Members, Participants, or Others

CME has not solicited and does not intend to solicit comments regarding this proposed rule change. CME has not received any unsolicited written comments from interested parties.

III. Solicitation of Comments

Interested persons are invited to submit written data, views and arguments concerning the foregoing,

[3] The Commission approved SR–CME–2012–13 on April 26, 2012, as to the new reporting requirement requiring all FCM clearing members to file daily, segregated, secured 30.7 and ''sequestered'' (or customer cleared swaps) statements, as applicable, on a daily basis. Exchange Act Release No. 34–66867, 77 FR 26062 (May 2, 2012).

including whether the proposed rule change is consistent with the Act. Comments may be submitted by any of the following methods:

• Electronic comments may be submitted by using the Commission's Internet comment form (*http://www.sec.gov/rules/sro.shtml*), or send an email to *rule-comments@sec.gov.* Please include File No. SR–CME–2012–21 on the subject line.

• Paper comments should be sent in triplicate to Elizabeth M. Murphy, Secretary, Securities and Exchange Commission, 100 F Street NE., Washington, DC, 20549–1090.

All submissions should refer to File Number SR–CME–2012–21. This file number should be included on the subject line if email is used. To help the Commission process and review your comments more efficiently, please use only one method. The Commission will post all comments on the Commission's Internet Web site (*http://www.sec.gov/rules/sro.shtml*). Copies of the submission, all subsequent amendments, all written statements with respect to the proposed rule change that are filed with the Commission, and all written communications relating to the proposed rule change between the Commission and any person, other than those that may be withheld from the public in accordance with the provisions of 5 U.S.C. 552, will be available for Web site viewing and printing in the Commission's Public Reference Room, 100 F Street NE., Washington, DC 20549 on official business days between the hours of 10:00 a.m. and 3:00 p.m. Copies of such filing also will be available for inspection and copying at the principal office of CME. All comments received will be posted without change; the Commission does not edit personal identifying information from submissions. You should submit only information that you wish to make available publicly. All submissions should refer to File Number SR–CME–2012–21 and should be submitted on or before July 12, 2012.

IV. Commission's Findings and Order Granting Accelerated Approval of Proposed Rule Change

Section 19(b) of the Act [4] directs the Commission to approve a proposed rule change of a self-regulatory organization if it finds that such proposed rule change is consistent with the requirements of the Act and the rules and regulations thereunder applicable to such organization. The Commission finds that the proposed rule change is consistent with the requirements of the Act, in particular the requirements of Section 17A of the Act, and the rules and regulations thereunder applicable to CME.[5] Specifically, the Commission finds that the proposed rule change is consistent with Section 17A(b)(3)(F) of the Act which requires, among other things, that the rules of a clearing agency be designed to protect investors and the public interest because the proposed rule change should allow CME to better monitor the financial status and risk management procedures of its clearing members.[6]

In its filing, CME requested that the Commission approve this proposed rule change on an accelerated basis for good cause shown. CME cites as the reason for this request CME's operation as a DCO, which is subject to regulation by the CFTC under the CEA. This rule change is being made to enhance CME's efforts to protect investors who utilize its clearinghouse services through its FCM clearing members.

The Commission finds good cause for approving the proposed rule change prior to the 30th day after the date of publication of notice in the **Federal Register** because the proposed rule change allows CME to implement the additional clearing member surveillance designed specifically to protect investors and the public interest.

V. Conclusion

It is therefore ordered, pursuant to Section 19(b)(2) of the Act, that the proposed rule change (SR–CME–2012–21) is approved on an accelerated basis.

For the Commission, by the Division of Trading and Markets, pursuant to delegated authority.[7]

Kevin M. O'Neill,

Deputy Secretary.

[FR Doc. 2012–15125 Filed 6–20–12; 8:45 am]

BILLING CODE 8011–01–P

[4] 15 U.S.C. 78s(b).

[5] 15 U.S.C. 78q–1. In approving this proposed rule change, the Commission has considered the proposed rule's impact on efficiency, competition, and capital formation. 15 U.S.C. 78c(f).

[6] 15 U.S.C. 78q–1(b)(3)(F).

[7] 17 CFR 200.30–3(a)(12).

SECURITIES AND EXCHANGE COMMISSION

[Release No. 34–67208; File No. SR–FINRA–2011–058]

Self-Regulatory Organizations; Financial Industry Regulatory Authority, Inc.; Notice of Filing of Amendment No. 2 and Order Granting Accelerated Approval of a Proposed Rule Change, as Modified by Amendment Nos. 1 and 2, To Amend FINRA Rule 6433 (Minimum Quotation Size Requirements for OTC Equity Securities)

June 15, 2012.

I. Introduction

On October 6, 2011, the Financial Industry Regulatory Authority, Inc. (''FINRA'') filed with the Securities and Exchange Commission (''Commission''), pursuant to Section 19(b)(1) of the Securities Exchange Act of 1934 (''Act'') [1] and Rule 19b–4 thereunder,[2] a proposed rule change to amend FINRA Rule 6433 (''Rule''), which governs minimum quotation size requirements for OTC Equity Securities (''Original Proposal'').[3] The proposed rule change is intended to simplify the Rule's price and size tiers; facilitate the display of customer limit orders under FINRA Rule 6460 (Display of Customer Limit Orders); [4] and expand the scope of the Rule. The proposed rule change was published for comment in the **Federal Register** on October 20, 2011.[5] The Commission received seven comment letters on the Original Proposal from four separate commenters,[6] as well as

[1] 15 U.S.C. 78s(b)(1).

[2] 17 CFR 240.19b–4.

[3] ''OTC Equity Security'' means ''any equity security that is not an NMS stock as that term is defined in Rule 600(b)(47) of SEC Regulation NMS; provided, however, that the term 'OTC Equity Security' shall not include any Restricted Equity Security.'' *See* FINRA Rule 6420(e).

[4] *See* Securities Exchange Act Release No. 62359 (June 22, 2010), 75 FR 37488 (June 29, 2010) (Order Approving NMS–Principled Rules for OTC Equity Securities) (''NMS–Principled Rules Approval Order''). FINRA Rule 6460 became operative on May 9, 2011.

[5] *See* Securities Exchange Act Release No. 65568 (October 14, 2011), 76 FR 65307 (''Notice'') (publication of Original Proposal). On November 17, 2011, FINRA consented to extending the time period for the Commission to either approve or disapprove the proposed rule change or to institute proceedings to determine whether to disapprove the proposed rule change to January 18, 2012.

[6] *See* Letter from Suzanne H. Shatto, dated October 20, 2011 (''Shatto Letter''); Letter from Naphtali M. Hamlet, dated October 21, 2011 (''Hamlet Letter); Letter from Daniel Zinn, General Counsel, OTC Markets Group Inc. (''OTC Markets'') to Elizabeth M. Murphy, Secretary, Commission, dated November 10, 2011 (''OTC Markets Letter I''); Letter from Michael T. Corrao, Managing Director, Knight Capital Group, Inc. (''Knight'') to Elizabeth

two responses to the comment letters from FINRA.[7] On January 17, 2012, the Commission instituted proceedings pursuant to Section 19(b)(2)(B) of the Act[8] to determine whether to approve or disapprove the proposed rule change.[9] The Order Instituting Proceedings was published for comment in the **Federal Register** on January 24, 2012.[10] The Commission received one comment letter in response to the Order Instituting Proceedings.[11] On April 17, 2012, FINRA filed Amendment No. 1 to the proposed rule change. The proposed rule change, as modified by Amendment No. 1, was published for comment in the **Federal Register** on April 20, 2012.[12] The Commission received two comment letters on the proposed rule change, as modified by Amendment No. 1.[13] On June 5, 2012, FINRA filed Amendment No. 2 to the proposed rule change.[14]

The Commission is publishing this Notice and Order to solicit comment on Amendment No. 2 and to approve the proposed rule change, as modified by Amendments Nos. 1 and 2 thereto, on an accelerated basis.

II. Description of the Proposal

As described more fully in the Original Proposal, FINRA proposed changes to the minimum quotation sizes in FINRA Rule 6433 to, among other things, simplify the Rule's price and size tiers, facilitate the display of customer limit orders under FINRA Rule 6460,[15] and expand the Rule's scope.

Currently, FINRA Rule 6433 requires every member functioning as an OTC Market Maker[16] that enters firm quotations into any inter-dealer quotation system that permits quotation updates on a real-time basis to honor those quotations for certain minimum sizes (''minimum quotation sizes'').[17] Rule 6433 sets forth the specific minimum quotation size requirements in tiers that are based on the price of the OTC equity security being quoted by the market maker. Further, FINRA Rule 6460 requires any OTC Market Maker displaying a priced quotation in an OTC equity security in an inter-dealer quotation system to publish immediately (subject to certain limited exceptions) a bid or offer that reflects: (1) The price and full size of a customer limit order that improves the market maker's bid or offer; and (2) the full size of a customer limit order that: (a) Is priced equal to the market maker's bid or offer; (b) is priced equal to the best bid or offer of the inter-dealer quotation system in which the market maker is quoting; and (c) is more than a *de minimus* amount in relation to the size of the market maker's bid or offer.

In its Original Proposal, FINRA explained that OTC Market Makers currently are not required to display a customer limit order unless doing so would comply with the minimum quotation sizes applicable to the display of quotations on an inter-dealer quotation system.[18] FINRA stated that the proposed rule change would benefit investors by facilitating the display of customer limit orders under Rule 6460, which generally requires that OTC Market Makers fully display better-priced customer limit orders (or same-priced customer limit orders that are at the best bid or offer and that increase the OTC Market Maker's size by more than a *de minimus* amount).[19]

Specifically, FINRA proposed that the minimum quotation size required for display of a quotation in an OTC equity security would fall into one of six tiers rather than the current nine tiers. Under the current rule, there are nine tiers as follows:

- $2500.01 per share and above, the minimum quotation size is 1 share;
- $1000.01 through $2500.00 per share, the minimum quotation size is 5 shares;
- $500.01 through $1000.00 per share, the minimum quotation size is 10 shares;
- $200.01 through $500.00 per share, the minimum quotation size is 25 shares;
- $100.01 through 200.00 per share, the minimum quotation size is 100 shares;
- $10.01 through $100.00 per share, the minimum quotation size is 200 shares;
- $1.01 through $10.00 per share, the minimum quotation size is 500 shares;
- $0.51 through $1.00 per share, the minimum quotation size is 2,500 shares;
- $0.0001 through $0.50 per share, the minimum quotation size is 5,000 shares.

Under FINRA's Original Proposal, the proposed six tiers would be as follows:

- $175.00 per share and above, the minimum quotation size would be 1 share;
- $1.00 through $174.99 per share, the minimum quotation size would be 100 shares;

M. Murphy, Secretary, Commission, dated November 16, 2011 (''Knight Letter I''); Letter from R. Cromwell Coulson, President & CEO, OTC Markets to Craig Lewis and Kathleen Hanley, Commission, dated November 18, 2011 (''OTC Markets Letter II''); Letter from Daniel Zinn, General Counsel, OTC Markets Group Inc. to Elizabeth M. Murphy, Secretary, Commission, dated December 29, 2011 (''OTC Markets Letter III''); Letter from Michael T. Corrao, Managing Director, Knight Capital Group, Inc. to Elizabeth M. Murphy, Secretary, Commission, dated January 13, 2012 (''Knight Letter II'').

[7] *See* Email from Marc Menchel, FINRA to John Ramsay, David S. Shillman, and Nancy J. Sanow, Division of Trading and Markets, Commission, dated November 30, 2011 (''FINRA Response I'') and Letter from Stephanie M. Dumont, Senior Vice President and Director of Capital Markets Policy, FINRA to Elizabeth M. Murphy, Secretary, Commission, dated December 23, 2011 (''FINRA Response II'').

[8] 15 U.S.C. 78s(b)(2)(B).

[9] *See* Securities Exchange Act Release No. 66168 (January 17, 2012) (''Order Instituting Proceedings''). On March 29, 2012, FINRA consented to extend the time period for the proceedings for the Commission to determine whether to approve or disapprove the proposed rule change to June 15, 2012.

[10] *See* Order Instituting Proceedings at 77 FR 3515. The comment period closed on February 14, 2012, and FINRA's rebuttal period closed on February 28, 2012.

[11] *See* Letter from Daniel Zinn, General Counsel, OTC Markets Group Inc. to Elizabeth M. Murphy, Secretary, Commission, dated February 14, 2012 (''OTC Markets Letter IV'').

[12] *See* Securities Exchange Act Release No. 66819 (April 17, 2012), 77 FR 23770 (April 20, 2012). Amendment No. 1 revised the Original Proposal's minimum quote size requirements and proposed that the amended Rule operate as a pilot. The comment period for the Notice of Amendment No. 1 closed on May 7, 2012.

[13] *See* Letter from Daniel Zinn, General Counsel, OTC Markets Group Inc. to Elizabeth M. Murphy, Secretary, Commission, dated May 7, 2012 (''OTC Markets Letter V''); Letter from Michael T. Corrao, Managing Director, Knight Capital Group, Inc. to Elizabeth M. Murphy, Secretary, Commission, dated May 7, 2012 (''Knight Letter III'').

[14] In Amendment No. 2, as further described below, FINRA committed to provide specific data to allow the Commission to evaluate the impact of the proposed pilot on the over-the-counter (''OTC'') equity market; responded to comments received on Amendment No. 1; and clarified certain statements in the Original Proposal and Amendment No. 1. Amendment No. 2 also clarified that the implementation date of the proposed rule change would be no sooner than 120 days following Commission approval and no later than 180 days following Commission approval. A copy of Amendment No. 2 is located in the Commission's public file for SR–FINRA–2011–058 at *http://www.sec.gov/comments/sr-finra-2011-058/finra2011058.shtml*.

[15] *See* NMS-Principled Rules Approval Order, *supra* note 4.

[16] OTC Market Maker means ''a member of FINRA that holds itself out as a market maker by entering proprietary quotations or indications of interest for a particular OTC Equity Security in any inter-dealer quotation system, including any system that the SEC has qualified pursuant to Section 17B of the Act. A member is an OTC Market Maker only in those OTC Equity Securities in which it displays market making interest via an inter-dealer quotation system.'' *See* FINRA Rule 6420(f).

[17] *See* Original Proposal, *supra* note 5.

[18] *See Regulatory Notice* 10–42 (September 2010).

[19] FINRA Rule 6460 was adopted as part of an effort to extend certain protections in place for NMS stocks to quoting and trading of OTC Equity Securities. *See* NMS-Principled Rules Approval Order, *supra* note 4. In approving FINRA Rule 6460, the Commission noted that ''FINRA's limit order display proposal marks a positive step in efforts to improve the transparency of OTC Equity Securities and the handling of customer limit orders in this market sector.'' *Id.*

• $0.51 through $0.9999 per share, the minimum quotation size would be 200 shares;
• $0.26 through $0.5099 per share, the minimum quotation size would be 500 shares;
• $0.02 through $0.2599 per share, the minimum quotation size would be 1,000 shares;
• $0.0001 through $0.0199 per share, the minimum quotation size would be 10,000 shares.

Under Amendment No. 1, the proposed six tiers would be as follows:
• $175.00 per share and above, the minimum quotation size would be 1 share;
• $1.00 through $174.99 per share, the minimum quotation size would be 100 shares;
• $0.51 through $0.9999 per share, the minimum quotation size would be 1,000 shares;
• $0.20 through $0.5099 per share, the minimum quotation size would be 2,500 shares;
• $0.10 through $0.1999 per share, the minimum quotation size would be 5,000 shares;
• $0.0001 through $0.0999 per share, the minimum quotation size would be 10,000 shares.

Amendment No. 1 would increase the minimum quotation sizes for most price points between $0.02 and $1.00 in comparison to the Original Proposal. Under Amendment No. 1, the proposed minimum quotation size for securities priced between $0.02 and $0.0999 would be increased from 1,000 shares to 10,000 shares; between $0.10 and $0.1999 would be increased from 1,000 shares to 5,000 shares; between $0.26 and $0.5099 would be increased from 500 shares to 2,500 shares; and between $0.51 and $0.9999 from 200 shares to 1,000 shares, when compared to the Original Proposal. The proposed minimum quotation size for securities priced below $0.02 would be 10,000 shares, which remains unchanged from the Original Proposal.

Based on its study of the Order Audit Trail System (''OATS'') data for OTC Equity Securities in connection with its Original Proposal, FINRA in its Original Proposal stated that the changes to the current tier sizes set forth in the Original Proposal would result in the display of a larger number of customer limit orders, potentially increasing from 50% to 90% the number of customer limit orders eligible for display, particularly for securities quoted between $0.51 and $0.9999 per share.[20] In Amendment No. 2, FINRA clarified that the sample it had referred to in the Original Proposal pertained only to securities priced between $0.51 and $1.00 per share.[21] In its Original Proposal, FINRA stated that, for securities priced at or above $0.02 per share, the reduction in minimum quotation size requirements would cause a greater percentage of customer limit orders to be displayed.[22]

Based on a later study, as described in Amendment No. 1, FINRA stated that the revised tier sizes proposed in Amendment No. 1 would facilitate the display of additional liquidity by market makers in comparison to the Original Proposal and of a total of approximately 95% of all customer limit orders.[23] In addition, under the revised tiers described in Amendment No. 1, for securities priced from $0.10 up to $1.00, FINRA noted that the required minimum dollar value of displayed liquidity would range from $500.00 to $1,274.75, which are dollar amounts that, in FINRA's view, represent both the appropriate minimum dollar value of displayed liquidity for members and reasonable dollar values for customer orders to be eligible for display on an inter-dealer quotation system. In Amendment No. 2, FINRA stated that although its analysis of sample data showed that improved display of customer limit orders is most dramatic for those securities priced between $0.51 and $1.00 per share, it also found that, in the aggregate, a material increase in the number of displayable customer limit orders would be achieved with the new tier sizes.[24]

In the Original Proposal, FINRA stated that the proposed revisions to Rule 6433 were appropriate because they would simplify the price and size tier structure of the Rule and would facilitate the display of customer limit orders consistent with Rule 6460, while still recognizing the utility of requiring that quotes in lower-priced securities represent a minimum dollar-value commitment to the market. FINRA remarked that the revised proposed tiers, as described in Amendment No. 1, would increase the minimum quotation size requirements for OTC equity securities in comparison to the Original Proposal. In FINRA's view, the proposed tier sizes in Amendment No. 1 would increase the minimum dollar commitment to the market overall in comparison to the Original Proposal, while still facilitating investor protection by providing for greater display of customer limit orders than occurs under the current Rule. FINRA contended that the revised tiers described in Amendment No. 1 would continue to yield the benefits discussed in its Original Proposal, including the simplification of the existing Rule by reducing the number of minimum quotation tiers and incorporating a minimum of quotation size of 100 shares for all securities priced at or above $1.00, other than those priced at or above $175.

FINRA also believed that the minimum quotation size requirements contained in its Original Proposal and the proposed revisions contained in Amendment No. 1 would benefit investors by increasing the percentage of customer limit orders that would be eligible for display under Rule 6460, thereby improving transparency and enhancing execution opportunities for customer limit orders. In Amendment No. 1, FINRA noted its view that the resulting increased display of customer limit orders would enhance competition and pricing efficiency in the market for OTC equity securities, which also should have a positive impact on capital formation.[25] In Amendment No. 1, FINRA further stated that the resulting increased display of customer limit orders would improve the public availability of quotation information, and increase quote competition, market efficiency, best execution and disintermediation.[26]

Currently, Rule 6433 applies to those member firms that function as market makers in OTC equity securities. In the Original Proposal, FINRA proposed to expand the scope of the Rule to apply to all quotations or orders displayed in an inter-dealer quotation system, including quotations displayed by alternative trading systems (''ATSs'') or by non-market maker members representing customer trading interest.[27] FINRA noted that ATSs have become increasingly active in the OTC market and believed that the proposed expansion of the scope of the Rule would ensure that minimum quotation

[20] *See* Original Proposal, *supra* note 5.

[21] *See* Amendment No. 2, *supra* note 14.

[22] *See* Original Proposal, *supra* note 5. For securities priced under $0.02 per share, FINRA recognized that more substantive dollar-value commitments to the market would be required.

[23] In Amendment No. 1, FINRA stated that it had analyzed a random sample of over 100 million customer limit orders in OTC Equity Securities that were reported to FINRA during a six-month period.

[24] Specifically, FINRA looked at a random sample of 32 trading days between May and December 2011 and found that the number of customer limit orders at or above the minimum tier size increased from approximately 85% of customer limit orders being at or above the minimum size to be eligible for display under the current tiers to 96% of customer limit orders being eligible for display under the tiers proposed in Amendment No. 1.

[25] *See* Amendment No. 1, *supra* note 12.

[26] *Id.*

[27] The Commission notes that this proposal was not modified by Amendment No. 1.

sizes were observed consistently by all members displaying quotations on an inter-dealer quotation system.

FINRA remarked that other existing requirements and obligations would not be altered by its proposed rule change, as amended. According to FINRA, each member would continue to be required to honor its quotations for the full quantity displayed in accordance with FINRA Rule 5220 (Offers at Stated Prices), which generally provides that no member shall make an offer to buy or sell any security at a stated price unless such member is prepared to purchase or sell the security at such price and under such conditions as are stated at the time of such offer to buy or sell.[28] Likewise, member obligations pursuant to FINRA Rule 5210 (Publication of Transactions and Quotations) would continue to apply. Among other things, FINRA Rule 5210 generally prohibits members from publishing, circulating, or causing to be published or circulated, any quotation which purports to quote the bid price or asked price for any security, unless such member believes that such quotation represents a *bona fide* bid for, or offer of, such security.[29]

Under Amendment No. 1, the proposed rule change would be implemented for all OTC equity securities displayed on an inter-dealer quotation system on a pilot basis for a period of one year from the operative date of the proposed rule change. In the Original Proposal, FINRA stated that it would announce in a Regulatory Notice the operative date of the proposed rule change, which would be no later than 180 days following Commission approval of the proposed rule change. In Amendment No. 1, FINRA clarified that the operative date for the pilot would be 120 days following the date of Commission approval of the proposed rule change, as amended. In Amendment No. 2, FINRA further clarified that the operative date for the pilot would be no sooner than 120 days, and no later than 180 days, following the date of Commission approval of the proposed rule change, as amended. FINRA also has committed to provide the Commission with data to allow the Commission to evaluate the impact of the pilot program to revise the Rule's minimum quotation size requirements.[30]

[28] *See also* Rule 5220.01 (Firmness of Quotations).

[29] *See also* Rule 5210.01 (Manipulative and Deceptive Quotations).

[30] *See* Amendment No. 2, *supra* note 14.

III. Comment Letters and FINRA's Responses

A. Comment Letters Received on the Original Proposal and FINRA's Responses Thereto

The Commission received seven comment letters from four commenters on the Original Proposal.[31] FINRA submitted two responses to those comment letters.[32]

The commenters on the Original Proposal generally were supportive of the goal of having additional limit orders eligible for display. However, OTC Markets and Knight objected to the proposed revisions to the minimum quotation size requirements of Rule 6433.[33] Specifically, these commenters expressed concern that FINRA's proposal lacked sufficient economic analysis to demonstrate that the proposed revisions to the minimum quotation size requirements would improve liquidity or lower transaction costs for investors.[34] A third commenter suggested that the minimum dollar value of each tier size should be $100 as a means to provide greater transparency to all market participants.[35] A fourth commenter supported the proposal to the extent that it would help prevent manipulative practices, but otherwise addressed topics unrelated to the proposal.[36]

Knight expressed the view that the proposal could have the unintended consequence of negatively impacting the market by removing meaningful minimum required dollar value levels of displayed liquidity by market makers.[37] According to this commenter, because the proposed levels are significantly lower than currently required levels, the proposal potentially could cause a severe degradation in trading efficiency, particularly in less liquid securities, and thereby fail to meet the proposal's desired goal.[38] Knight provided a table to detail the change to the minimum dollar value required to be displayed by market makers under the proposal.[39] According to Knight, its table illustrated a significant decrease in dollar value of liquidity that market makers would be required to offer at each tier level.

In addition, Knight believed that, under the proposal, market makers would be required to quote insignificant dollar values, thereby creating additional operational and trading risks, without providing real value to the market.[40] Knight further expressed concern that any increase in costs to liquidity providers could result in the departure of market makers and thereby could cause an erosion of liquidity.[41] Knight recommended further economic analysis to study the expected impact of the proposed tier sizes on market liquidity, and requested that the Commission conduct an analysis of the data.[42] Knight suggested that, if the Commission were inclined to move forward after such analysis, a limited pilot would allow for the assessment of the proposal's impact on market quality while minimizing the effects of any unintended consequences.[43]

In another communication, Knight reiterated its belief that the proposal would have serious negative consequences to the OTC marketplace and investors, including a significant reduction in liquidity, inferior pricing and increased vulnerability to gaming and frontrunning.[44] Knight expressed concern about the consequences likely to result when concepts and rules from the market for NMS securities were applied to the OTC equity market, despite differing trading characteristics between NMS securities and OTC equity securities.[45] Knight again requested that the Commission conduct a comprehensive analysis of empirical data to assess whether the proposal has a sound basis and evaluate the costs and benefits associated with the proposal.[46] Knight questioned how FINRA could evaluate its obligations under Section 15A(b)(9) of the Act[47] without performing a fundamental analysis of the proposal.[48] Knight pointed to the prior analysis performed by the National Association of Securities Dealers, Inc., FINRA's predecessor, in connection with tier size reductions in Nasdaq securities and suggested that FINRA consider a similar approach for its current proposal.[49]

[31] *See supra* note 6.

[32] *See supra* note 7.

[33] *See* OTC Markets Letter I, Knight Letter I, OTC Markets Letter II, OTC Markets Letter III, and Knight Letter II.

[34] *Id.*

[35] *See* Shatto Letter.

[36] *See* Hamlet Letter.

[37] *See* Knight Letter I.

[38] *See* Knight Letter I at p. 1.

[39] *See* Knight Letter I at p. 2.

[40] *See id.*

[41] *See id.*

[42] *See id.*

[43] *See id.*

[44] *See* Knight Letter II at p. 1. Knight noted its agreement with the views expressed in OTC Markets Letter III. *Id.* Knight also included a modified version of the table that was included in its prior letter. *See* Knight Letter II at p. 3.

[45] *See id.*

[46] *See* Knight Letter II at p. 2.

[47] 15 U.S.C. 78*o*–3(b)(9).

[48] *Id.*

[49] *See id.* (citing Securities Exchange Act Release No. 40211 (July 15, 1998), 63 FR 39322 (July 22, 1998) (Order Approving a Proposed Rule Change to

Continued

Knight expressed the view that non-NMS securities are significantly less liquid than NMS securities and that the proposed rule change would have an adverse impact on both dealers and investors.[50] In Knight's opinion, the only possible benefits resulting from the proposal would accrue to firms that provide little or no liquidity, as those firms would ''pick-off'' dealer liquidity at the expense of investors.[51] Knight further noted that market makers like itself generally do not charge commissions or mark-up/mark-downs to competitors or broker-dealer clients.[52] Knight indicated that market makers would continue to incur costs to access liquidity under the proposal and that there was a likelihood that market participants would gravitate to posting quotations at the minimum tier size as they currently do today.[53] Finally, Knight reiterated its concern that costs could increase for self-clearing firms under the proposal and that costs would be more burdensome in the case of non-DTCC eligible securities (*i.e.,* physically settled securities) because those costs were driven by the number of settlements as opposed to the number of trades.[54]

OTC Markets expressed the view that the reduction of minimum quote size requirements ''has not been shown by FINRA to benefit investors and has a significant risk that it will degrade market quality.'' [55] OTC Markets further suggested that Regulation NMS-type rules are not appropriate in the context of smaller issuers.[56] In OTC Market's view, the immediate effect of the proposal would be less displayed liquidity, even if the actual liquidity were larger, because quotations typically are submitted at the minimum size.[57] OTC Markets believed that this potential effect would lead to more volatility and would increase realized spreads because orders ultimately would be filled away from the inside quote, thereby raising the cost of trading.[58]

OTC Markets stated that the analysis provided by FINRA was not compelling, and cited to public commentators and academics that generally have suggested that Regulation NMS-type rules are harmful to the market for smaller companies' securities.[59] OTC Markets asserted that FINRA's statistical analysis concerning the additional percentage of customer orders that would be displayed under the proposed rule change was flawed because, among other things, FINRA did not consider the impact of its own quote aggregation rules.[60] OTC Markets believed, at a minimum, FINRA's analysis required further study,[61] and recommended that the Commission's staff review the actual effect of the proposed rule change on the display of limit orders.[62]

In another communication, OTC Markets again expressed the view that FINRA's analysis was flawed.[63] OTC Markets suggested that the proposal represented a large change in OTC market structure and could negatively impact capital formation for small businesses. Again, OTC Markets requested that the Commission's staff conduct its own economic analysis of the proposed rule change.

FINRA provided two response letters addressing issues raised by the commenters on the Original Proposal.[64] In both of its responses, FINRA noted that the purpose of allowing smaller displayed quotes was to allow for the greater use of limit orders by investors.[65] In FINRA Response II, FINRA reiterated that the Original Proposal was associated with the FINRA limit order display rule, which recently had provided a fundamental investor protection with respect to OTC equity securities.[66] FINRA explained that the existing minimum quotation sizes reduced the benefit of its limit order display rule because the higher existing levels ''act to restrict transparency of a large number of customer limit orders.'' [67] Addressing commenters' concerns about reduced liquidity, FINRA noted that the lower minimum quote sizes described in the Original Proposal would allow for the display of a greater number of limit orders. FINRA believed that the larger number of quotes would increase competition, and increased competition would improve liquidity.[68] FINRA noted that, although the role of the market maker had been reduced in the trading of NMS securities, liquidity in those securities appeared intact.[69] FINRA remarked that, to the extent that commenters were concerned that the processing of smaller quotes would be uneconomical, the proposed rule change would not mandate the use of smaller quote sizes.[70]

In FINRA Response II, FINRA disagreed with OTC Markets' suggestion that the percentage of customer limit orders currently displayed under Rule 6460 already was in line with FINRA's estimate of the number of customer limit orders that would be displayed under the proposal.[71] FINRA believed that, contrary to the commenter's assertion, broker-dealers were unlikely to be in a position to aggregate multiple customer orders to reach the existing display thresholds, because OTC equity securities trade infrequently and at widely varying volume each day.[72] FINRA also noted that, in any event, price transparency should not depend upon the expectation that other orders for OTC equity securities might be placed at the same price and at around the same time.[73] Finally, FINRA noted that a more recent sample of relevant data further supported its position that the proposed rule change would increase the display of customer limit orders from 50% under the existing minimum quotation size requirements to 90% under the Original Proposal in the case of OTC equity securities priced between $0.51 and $1.00.[74]

In FINRA Response II, FINRA stated its view that the chart contained in Knight Letter I did not accurately align tier and price points and therefore did not allow for an appropriate comparison of the current and proposed rules.[75] FINRA provided a comparison of similar price points and ranges to demonstrate that the Original Proposal would increase the dollar values for two proposed lower price point tiers and decrease dollar values for three proposed higher price point tiers, while

Permanently Expand the NASD's Rule Permitting Market Makers to Display Their Actual Quotation Size)).

[50] *See* Knight Letter II at pp. 2–3.

[51] *See* Knight Letter II at p. 3.

[52] *See id.*

[53] *See id.*

[54] *See* Knight Letter II at pp. 3–4.

[55] *See* OTC Markets Letter I at p. 1.

[56] *See id.*

[57] *See* OTC Markets Letter I at p. 3.

[58] *See id.*

[59] *See* OTC Markets Letter I at p. 2.

[60] *See id.*

[61] *See id.*

[62] *See* OTC Markets Letter I at p. 3.

[63] *See* OTC Markets Letter II.

[64] *See supra* note 7.

[65] *See* FINRA Response I at p. 1.

[66] *See* FINRA Response II at p. 1.

[67] *Id.*

[68] *See* FINRA Response I at p. 1 and FINRA Response II at p. 5, n. 17. Knight and OTC Markets stated that market makers might react to the proposed rule change by reducing their quote sizes. *See* Knight Letter I at pp. 1–2 and OTC Markets Letter I at p. 3.

[69] *See* FINRA Response I at p. 1.

[70] *See* FINRA Response I at p. 1 and FINRA Response II at p. 5, n. 17. Knight believed that there would be costs associated with the operational complexity of clearing increased volumes of smaller trades in non-DTC eligible securities. *See* Knight Letter I at p. 2. OTC Markets believed that the proposed rule change would increase transaction costs for investors. *See* OTC Markets Letter I at p. 3.

[71] *See* FINRA Response II at p. 3. OTC Markets believed that the FINRA analysis failed to take into account aggregation requirements. *See* OTC Markets Letter I at p. 2.

[72] *See* FINRA Response II at p. 3.

[73] *See id.*

[74] *See id.*

[75] *See* FINRA Response II at pp. 3–4.

the dollar values of one proposed price point tier would remain unchanged.[76] FINRA believed that its proposed structure was better for investors; was more consistent with the national market system; and represented more meaningful minimum displayed liquidity at the lowest tiers.[77] FINRA disputed the suggestion in Knight Letter I that its proposal would degrade market quality or have far reaching effects on liquidity and efficiency in the OTC markets, noting again that the ''opposing commenters have provided no analysis or clear explanation that would indicate the likelihood of a nexus between such harms and the proposal.'' [78] FINRA reiterated that the likely impact of the proposed rule change would be greater displayed customer limit orders, as customer orders may be smaller than market maker orders, and that this increased display would result in increased price transparency.[79] FINRA noted that the Rule only prescribes the minimum sizes required for display, and that market makers may choose to display a quotation at the proposed minimum or in excess of the proposed minimum, as they do today.[80]

In FINRA Response II, FINRA further noted that several comments were not germane to the consideration of the merits of its proposal. For example, FINRA did not believe that there was a nexus between the proposal and the extension of certain other NMS protections to OTC markets, as stated in the OTC Markets comments,[81] or between the proposal and issues such as locked or crossed markets and access fees, as suggested by Knight Letter I.[82]

OTC Markets reiterated its views regarding the proposal in its third comment letter, which was submitted following FINRA's responses to the comment letters.[83] The commenter again stated its view that Regulation NMS-type rules were not appropriate for the OTC market.[84] In addition, OTC Markets once more raised issues regarding FINRA's analysis. According to OTC Markets, FINRA's analysis did not reflect existing customer order aggregation requirements;[85] did not provide information regarding dollar and share volume relative to tier sizes;[86] and did not analyze the proposal's potential impact on market orders or proprietary quotes.[87]

OTC Markets remarked that FINRA's response letters failed to address Section 3(f) of the Act,[88] which requires that whenever, pursuant to the Act, the Commission is engaged in rulemaking, or in the review of a rule of a self-regulatory organization (''SRO''), and is required to consider or determine whether an action is necessary or appropriate in the public interest, the Commission shall also consider, in addition to the protection of investors, whether the action will promote efficiency, competition, and capital formation.[89] OTC Markets believed that FINRA's proposed revisions potentially could have various dynamic effects on the OTC market.[90] OTC Markets stated that it reviewed data relating to all trades in OTC equity securities that occurred on October 27, 2011, with respect to share volume, dollar volume and number of trades in relation to the existing and proposed tier sizes.[91] Based on its review, OTC Markets believed that the proposal would not significantly increase liquidity but would impose a direct cost on investors, particularly investors placing marketable orders.[92] OTC Markets believed that the proposed rule change would lead most market makers to reduce their quote sizes and display less liquidity.[93] OTC Markets further believed that an extensive decrease in displayed proprietary liquidity would ''overwhelmingly offset the benefit of the increased number of customer limit orders displayed.'' [94]

B. Comment Letter Received on the Order Instituting Proceedings

Following publication by the Commission of the Order Instituting Proceedings, the Commission received another comment letter from OTC Markets, which reiterated its prior statements and provided additional data for consideration.[95] OTC Markets contended that, as part of the proceedings, the Original Proposal should be evaluated in the context of Section 3(f) of the Act.[96] OTC Market stated that the proposal would contravene the requirements of Section 15A(b)(6) of the Act [97] because of the potential negative impact on the operation of the OTC market.[98] OTC Markets also stated that the proposal would contravene Section 15A(b)(11) of the Act [99] because of the potential decrease in displayed liquidity at the inside price.[100] OTC Markets submitted a DVD containing data for the month of October 2011 and noted that its data would be available to others who want to conduct a similar analysis.[101] Finally, OTC Markets reiterated its request that FINRA or the Commission provide additional data for a panel of independent academics to evaluate the appropriate tier size levels for OTC equity securities.[102]

C. Comment Letters Received on Amendment No. 1

Following the publication by the Commission of Amendment No. 1, the Commission received two more comment letters from Knight and OTC Markets, respectively.[103] As noted above, these commenters previously raised concerns relating to the portion of the Original Proposal that would revise the minimum quotation size requirements.[104] In providing comments on the proposal, as amended, Knight stated that ''the changes FINRA made to the tier sizes address many of the points made in the comment letters. More specifically, FINRA's revised proposal appears to strike an appropriate balance between displayed liquidity from retail limit orders and a tier size requirement for market makers.'' [105] Knight also indicated support for FINRA's proposed pilot program so that the impact of the changes to the Rule could be evaluated. Knight, however, suggested that the proposed one-year length of the pilot

[76] *See* FINRA Response II at p. 4.

[77] *See id.*

[78] *See* FINRA Response II at pp. 4–5.

[79] *See* FINRA Response II at pp. 5–6.

[80] *See* FINRA Response II at p. 6; *see also* FINRA Response I at p. 1.

[81] *See* FINRA Response II at p. 6. OTC Markets believed ''NMS-type rules are harmful when applied to smaller companies.'' *See* OTC Markets Letter I at pp. 1–2.

[82] *See* FINRA Response II at p. 6. As noted above, Knight requested that the Commission examine the impact on trading, clearing (*e.g.,* the operational complexity of clearing increased volumes of smaller trades in non-DTC eligible securities), related costs, locked markets, access fees, trading efficiency and market participant behavior under the proposed reduced tier sizes. *See* text accompanying note 42 *supra.*

[83] *See* OTC Markets Letter III.

[84] *See* OTC Markets Letter III at p. 5.

[85] *See* OTC Markets Letter III at p. 7.

[86] *See* OTC Markets Letter III at p. 8.

[87] *See* OTC Markets Letter III at pp. 2–3.

[88] 15 U.S.C. 78c(f).

[89] *See* OTC Markets Letter III at pp. 2–3.

[90] *See* OTC Markets Letter III at p. 4.

[91] *See* OTC Markets Letter III at p. 5. OTC Markets stated that it had selected October 27, 2011 for its review because that day had the highest trading volume of any day that month and, according to the commenter, presumably also had the highest amount of investor liquidity for that month.

[92] *See* OTC Markets Letter III at p. 6.

[93] *See id.*

[94] *See* OTC Markets Letter III at p. 7.

[95] *See* OTC Markets Letter IV, *supra* note 11.

[96] *See* OTC Markets Letter IV at p. 2. *See* text accompanying note 88 *supra* for a description of Section 3(f) of the Exchange Act.

[97] 15 U.S.C. 78*o*–3(b)(6).

[98] *See* OTC Markets Letter IV at p. 2.

[99] 15 U.S.C. 78*o*–3(b)(11).

[100] *Id.*

[101] *See* OTC Markets Letter IV at p. 3.

[102] *See* OTC Markets Letter IV at p. 4.

[103] *See supra* note 13.

[104] *See, e.g.,* OTC Markets Letter I, Knight Letter I, OTC Markets Letter II, OTC Markets Letter III, and Knight Letter II.

[105] *See* Knight Letter III at p. 2.

was too long and that a three- or four-month period would be sufficient to gather the necessary data for the analysis.[106] Finally, Knight noted that the recent Jumpstart Our Business Startups Act (''JOBS Act''), which requires the Commission to conduct a study and provide a report to Congress on the impact of changes to the minimum tick size requirements in light of decimalization, likely would have some relationship to FINRA's proposed rule change.[107] Knight suggested that the Commission not approve FINRA's proposal until the Commission completed the required JOBS Act study on tick sizes.[108] OTC Markets, who submitted four prior letters, stated that the amended proposal ''improves on some facets of the original Proposed Rule, however the Amended Proposed Rule does not go far enough to protect liquidity and reduce volatility in the OTC market.'' [109] OTC Markets also pointed to the recently enacted JOBS Act, and recommended that the new law's required study should be combined with a study of the potential effects of FINRA's proposal.[110] OTC Markets further suggested that it would not be appropriate to introduce the proposed pilot program until such study was completed.[111] OTC Markets stated that, without further study, the amended proposal's potential risks would outweigh its potential benefits, and that the length and breadth of the proposed pilot would pose unwarranted risk to the OTC equity market.[112] In addition to recommending that the Commission first conduct a study on liquidity and volatility using currently available data before approving the pilot program, OTC Markets suggested that FINRA remove a prohibition on broker-dealer proprietary trading in a security at a price equal to or better than an unexecuted customer limit order and allow the two orders to trade in parity and in proportion to their displayed liquidity. OTC Markets posited that this change would incentivize proprietary liquidity and protect customer limit orders.

IV. Amendment No. 2

FINRA stated that its purpose in filing Amendment No. 2 was to address comments made by Knight and OTC Markets on the revised proposal, as set forth in Amendment No. 1; outline the steps FINRA intends to take to review and assess the effects of the amended Rule during the pilot period; and clarify certain issues raised in the Original Proposal and Amendment No. 1.[113] FINRA noted that it filed Amendment No. 1 to modify the proposed tiers in response to the comments received by the Commission and to propose that the revised Rule be implemented as a one-year pilot to allow FINRA and the Commission to assess its impact.[114] FINRA remarked that, although commenters had suggested reducing the proposed one-year length of the pilot, FINRA did not believe that a three- or four-month pilot period would provide sufficient time to gather data and to evaluate fully the impact of the proposed rule change. FINRA stated, however, that it would regularly monitor the results of the pilot and, if FINRA concluded that there had been a significant negative impact (including on liquidity) on the OTC market, FINRA would consider rescinding the pilot prior to the end of its one-year period.

FINRA also discussed the suggestion by Knight and OTC Markets that the Commission review minimum quotation sizes and minimum tick sizes for OTC equities concurrently, in light of the directive set forth in the JOBS Act that the Commission study the impact of decimalization. In responding to this suggestion, FINRA stated its view that the amendments to the Rule should not be delayed in light of the potential benefits of increased limit order display for the market and for investors. FINRA stated that, if minimum tick sizes were to change as a result of the JOBS Act study, it would consider whether additional revisions are necessary for OTC equity securities.

FINRA noted that it had worked closely with OTC liquidity providers, including Knight, in revising the Original Proposal to best achieve a balance that would facilitate both the goal of providing meaningful liquidity commitments by market makers and the display of competitively priced customer limit orders. With regard to Knight's concerns about the clearing costs that potentially could result if reduced quote sizes resulted in a more fragmented market, particularly for non-DTCC eligible securities, FINRA stated that it would monitor for this issue during the pilot period, although it believed that such securities accounted for a very small percentage of securities that would be subject to the Rule.

FINRA pointed out that OTC Markets took issue with the amended proposal because the commenter believed that it would harm markets by reducing displayed liquidity. According to FINRA, OTC Markets appeared to have formed its views based on an internal analysis of one day's trading activity and on a comparison of the existing and proposed tier sizes, with the assumption that market makers' quotations were always at the minimum quotation size. FINRA stated that this review and comparison were not a sufficient basis upon which to reasonably predict the impact on liquidity. FINRA disagreed with OTC Markets' view that FINRA had not studied how the revised tiers would affect overall liquidity. FINRA noted that it had conducted multiple analyses of relevant data. FINRA also noted that the pilot program would provide for the ability to compare and contrast data in the most effective manner. FINRA stated that, as part of the pilot, FINRA would review the impact of the pilot and would provide data to the Commission so that the Commission also could analyze the impact of the pilot. Further, FINRA suggested that other comments by OTC Markets were not germane to the consideration of the merits of the proposed rule change, including the suggestion that FINRA Rule 5320, which prohibits broker-dealers from trading ahead of customer limit orders, should be amended to allow market makers to trade in parity with their customers.

In addition, FINRA committed to provide the Commission with the data necessary to assess the impact of the revised tier sizes on the OTC equity market. In Amendment No. 2, FINRA specified the categories of data that it would provide to the Commission on a monthly basis, starting no later than 90 days after the start of the pilot, including price and volume information, execution data, and liquidity metrics and the time frame within which FINRA would submit the data.[115] FINRA also committed to

[106] *See id.*

[107] *See* Knight Letter III at pp. 2–3.

[108] *See* Knight Letter III at p. 3. *See* 15 U.S.C. 78l–1(c)(6)(A) (''The Commission shall conduct a study examining the transition to trading and quoting securities in one penny increments, also known as decimalization. The study shall examine the impact that decimalization has had on the number of initial public offerings since its implementation relative to the period before its implementation. The study shall also examine the impact that this change has had on liquidity for small and middle capitalization company securities and whether there is sufficient economic incentive to support trading operations in these securities in penny increments. Not later than 90 days after the date of enactment of this paragraph, the Commission shall submit to Congress a report on the findings of the study.'').

[109] *See* OTC Markets Letter V at p. 7.

[110] *See* OTC Markets Letter V at pp. 1–2.

[111] *See* OTC Markets Letter V at p. 2.

[112] *See* OTC Markets Letter V at pp. 2–3.

[113] *See* Amendment No. 2, *supra* note 14.

[114] *See infra* note 150 for a description of the data FINRA has committed to provide on a monthly basis to the Commission.

[115] In Amendment No. 2, FINRA also committed to provide the data for five random days from each

provide the Commission with an assessment addressing the impact of the pilot, the concerns raised by commenters, and the effectiveness of the pilot in achieving the desired results.

Further, in Amendment No. 2, FINRA clarified certain matters. FINRA pointed out that, when it stated in the Original Proposal that ''only approximately 50% of customer limit orders in the sample met the current Rule's thresholds and would have been eligible to be displayed,'' FINRA was referring to a sample that covered only those securities that were priced between $0.51 and $1.00. In Amendment No. 2, FINRA described a more recent sampling based on 32 randomly selected trading days between May and December 2011. FINRA found that the number of customer limit orders at or above the minimum tier size increased under the proposed tier sizes from approximately 85% of customer limit orders at or above the minimum size that would be eligible for display to 96% of customer limit orders.[116] Finally, FINRA noted that the correct implementation date period will be no sooner than 120 days, and no later than 180 days, from the date of Commission approval of the proposed rule change.

V. Discussion and Findings

After careful review of the proposed rule change, as modified by Amendment Nos. 1 and 2, as well as the comment letters and the FINRA response letters received on the proposal, the Commission finds that the proposed rule change is consistent with the requirements of the Act and the rules and regulations thereunder applicable to a national securities association.

In particular, the Commission finds that the proposed rule change is consistent with Section 15A(b)(6) of the Act,[117] in that it is designed, among other things, to prevent fraudulent and manipulative acts and practices, to promote just and equitable principles of trade, and, in general, to protect investors and the public interest. In addition, the Commission finds that the proposed rule change is consistent with Section 15A(b)(11), in that it includes provisions governing the form and content of quotations relating to securities sold otherwise than on a national securities exchange which may be distributed or published by any member or person associated with a member, and the persons to whom such quotations may be supplied.[118]

The Commission preliminarily believes that the proposed rule change, by adjusting the minimum quotation size requirements of Rule 6433, should help facilitate the display of more customer limit orders for OTC equity securities priced $0.20 and above than exists under the current Rule. The Commission notes that the benefits to investors of Rule 6460, which mandates the display of customer limit orders for OTC equity securities when that rule's conditions are met, are reduced if the minimum quotation requirements for OTC equity securities under Rule 6433 are set too high. The Commission preliminarily believes that incorporating a greater number of customer limit orders in quotes could improve the prices at which these customer orders are executed.

In addition, lowering the minimum quotation size requirements for OTC equity securities priced $0.20 and above could foster greater liquidity for these securities because broker-dealers that currently do not make markets in some or all OTC equity securities could be incentivized to become market makers in these securities. The current minimum quotation size requirements may impede some broker-dealers from committing resources to certain OTC equity securities because they may consider the dollar value commitment inherent in the Rule's current thresholds to be too high. Lower minimum quotation size thresholds for certain OTC equity securities may prompt some broker-dealers to become market makers in OTC equity securities because, for securities quoted at $0.20 and above, the minimum quotation size—and thus the minimum dollar value commitment to the security—would be reduced under the amended Rule.

If this were to occur, the increased competition from both market makers and customer limit orders could narrow spreads and increase liquidity in the market for OTC equity securities, to the benefit of investors, liquidity providers and the OTC marketplace generally. The Commission recognizes, however, that the actual broader impact of FINRA's proposed rule change on the market for OTC equity securities may not be known, and that the views of some commenters differ. Accordingly, the Commission believes that it is important that FINRA has proposed to implement the revised tier sizes as a one-year pilot program, and to provide the Commission with data to allow Commission staff to evaluate the actual impact of these changes on the OTC market, as well as to perform its own assessment thereof.

Further, the proposal would reduce from nine to six the number of price and size thresholds contained in the Rule. The Commission also notes that the proposal is designed to expand the scope of the Rule to cover quotations that are displayed on an inter-dealer quotation system by ATSs and by non-market making members representing customer trading interest. Expanding the scope of the Rule should help ensure that minimum quotation sizes are observed consistently by all FINRA members displaying quotations on an inter-dealer quotation system, whether those quotations are submitted by an OTC market maker or by an ATS.

As noted above, the Commission received ten comment letters from four separate commenters in response to the proposed rule change, as amended.[119] Two commenters supported the proposed rule.[120] Two other commenters, while generally supportive of the goal of enhancing limit order display, questioned the need to revise the Rule's current minimum quotation size requirements.[121] In their various letters, Knight and OTC Markets raised several main issues regarding both the Original Proposal and Amendment No. 1. Specifically, these commenters stated that the proposal: (1) Was based on a flawed and/or insufficient data analysis and should be subject to further study; (2) would cause lower liquidity and greater volatility for OTC equity securities; (3) should operate as a pilot program; and (4) would not promote efficiency, competition or capital formation.[122] OTC Markets also disputed whether the proposed rule change is consistent with Sections 15A(b)(6) and 15A(b)(11) of the Act.[123]

In its review of the proposal, the Commission has carefully considered the issues and concerns raised by these commenters and, as discussed below, has evaluated those issues and concerns in light of the mandate of Section

month for a one-year period prior to the operative date of the pilot.

[116] FINRA's analysis included all limit orders reported to OATS as being received by a FINRA member, including those from other FINRA members. FINRA excluded all proprietary orders originated by a member from its calculations. *See infra* notes 133 and 134 and accompanying text for a description of the analysis conducted by the staff of the Commission's Division of Risk, Strategy and Financial Innovation.

[117] 15 U.S.C. 78*o*–3(b)(6).

[118] 15 U.S.C. 78*o*–3(b)(11).

[119] *See supra* notes 6, 11 and 13.

[120] *See* Shatto Letter and Hamlet Letter, *supra* note 6.

[121] Specifically, Knight stated its support for the goal of making additional limit orders eligible under Rule 6460 for display, whereas OTC Markets stated its support for expanding Rule 6433 to include all quotations or orders published in inter-dealer quotation systems. *See* Knight Letter I at p. 1 and OTC Markets Letter I at p. 1.

[122] *See* Section 3(f) of the Act, 15 U.S.C. 78c(f).

[123] 15 U.S.C. 78*o*–3(b)(6) and 15 U.S.C. 78*o*–3(b)(11).

19(b)(2) of the Act that the Commission shall approve a proposed rule change if it finds that such proposed rule change is consistent with the requirements of the Act and rules and regulations thereunder applicable to a self-regulatory organization.

A. Whether the Proposed Rule Change is Consistent With Sections 15A(b)(6) and 15A(b)(11) of the Act

FINRA is a registered national securities association that is composed of brokers and dealers that are registered with the Commission under Section 15(a) of the Act. Among other things, FINRA regulates its members with respect to their activities in OTC equity securities pursuant to authority granted to it by Congress under Section 15A of the Act.[124] FINRA's mandate under Section 15A(b)(6) is to assure that its rules, among other things, are designed to ''prevent fraudulent and manipulative acts and practices, to promote just and equitable principles of trade, to foster cooperation and coordination with persons engaged in regulating, clearing, settling, processing information with respect to, and facilitating transactions in securities, to remove impediments to and perfect the mechanism of a free and open market and a national market system, and, in general, to protect investors and the public interest; and are not designed to permit unfair discrimination between customers, issuers, brokers, or dealers * * *.'' [125] Pursuant to Section 15A(b)(11) of the Act, FINRA is authorized to adopt rules applicable to its members ''governing the form and content of quotations relating to securities sold otherwise than on a national securities exchange which may be distributed or published by any member or person associated with a member, and the persons to whom such quotations may be supplied.'' [126] Such rules must be ''designed to produce fair and informative quotations, to prevent fictitious or misleading quotations, and to promote orderly procedures for collecting, distributing, and publishing quotations.''

OTC Markets asserted that FINRA's proposal contravenes Section 15A(b)(6) of the Act and disregards Section 15A(b)(11) of the Act.[127] The Commission believes that FINRA has authority under Sections 15A(b)(6) and 15A(b)(11) to establish rules governing the minimum quotation size requirements for its members when they enter quotations for OTC equity securities in an inter-dealer quotation system and to revise those rules, as necessary or appropriate. The proposed rule change, as amended, would revise the minimum quotation size requirements for broker-dealers that quote OTC equity securities in an inter-dealer quotation system. These minimum quotation size requirements impact not only the size of the quotes that broker-dealers must honor, but also the minimum size of customer limit orders that may have a right to be displayed. In the Commission's view, FINRA's proposed revisions are designed to protect investors by revising the Rule's tier thresholds such that a larger percentage of customer limit orders are reflected in quotations for OTC equity securities, thereby potentially improving the prices at which customer limit orders will be executed, consistent with the protection of investors and the public interest. In addition, as noted above, lowering the minimum quotation size requirements could incent more broker-dealers to become market makers in OTC equity securities. Although further study will be required during the pilot period, if more broker-dealers become market makers in OTC equity securities, there could be a further narrowing of spreads and an increase in liquidity in the OTC market, to the benefit of investors, the public interest, and the perfection of a free and open market and a national market system. In addition, the Commission considers the proposed rule change to govern the form and content of quotations for OTC equity securities, consistent with Section 15A(b)(11) of the Act.

B. Whether FINRA's Data Analysis Was Flawed

In several comment letters, OTC Markets claimed that FINRA's analysis that the Original Proposal would result in an increased display of customer limit orders was flawed.[128] OTC Markets stated that the reduction of minimum quote size requirements ''has not been shown by FINRA to benefit investors and has a significant risk that it will degrade market quality.'' [129] OTC Markets claimed that FINRA's analysis was inaccurate and misleading because FINRA did not segment the order data by market orders, marketable limit orders, limit orders that would have improved the spread of the best bid/offer, limit orders at the best bid/offer, and limit orders outside the best bid/offer.[130] OTC Markets also contended that FINRA failed to analyze the number of executions against limit orders and the number of executions involving a broker-dealer trading as principal.[131] Both OTC Markets and Knight urged the Commission to conduct its own analysis of FINRA's proposal.[132]

In response to these comments, the staff of the Commission's Division of Risk, Strategy and Financial Innovation (''RSFI'') undertook an empirical analysis relating to the potential effects of the proposal, which was intended to supplement FINRA's analysis, and performed a modification of the analysis that FINRA discussed in the Original Proposal, using the first five trading days of November 2011.[133] The RSFI staff found that, for customer orders with limit prices between $0.51 and $1.00, displayable orders would increase from 47.5% to 92.6% under the revisions to the tier sizes contained in the Original Proposal. The RSFI staff stated that this finding was consistent with the results reported by FINRA for that particular tier size in the Original Proposal. Applying the revised tier sizes in Amendment No. 1, the RSFI staff discerned that the percentage of displayable orders for the same tier threshold noted above would increase from 47.5% to 73.8%. In addition, the RSFI staff examined customer orders, regardless of price, and found that the percentage displayed under the current tier structure is 92.5% and would increase to 97.5% under Amendment No. 1. As described in detail in the RSFI Memorandum, the RSFI staff's analysis found that the greatest increase in transparency likely would occur for securities priced between $0.10 and $1.00.[134] In addition, the RSFI staff

[124] 15 U.S.C. 78*o*–3.

[125] 15 U.S.C. 78*o*–3(b)(6).

[126] 15 U.S.C. 78*o*–3(b)(11).

[127] *See* OTC Markets Letter IV at p. 2.

[128] *See* OTC Markets Letter I at p. 2; OTC Markets Letter II; and OTC Markets Letter III at pp. 7–8.

[129] *See* OTC Markets Letter I at p. 1.

[130] *See* OTC Markets Letter III at p. 5.

[131] *Id.*

[132] *See, e.g.,* OTC Markets Letter I at pp. 3–4; OTC Markets Letter II; and Knight Letter I at p. 2. OTC Markets provided data relating to quotes and trades in OTC equity securities that occurred in October 2011, which the commenter provided for the benefit of Commission staff and others to use in conjunction with a review of FINRA's proposed rule change.

[133] *See* Memorandum from the Division of Risk, Strategy and Financial Innovation, dated June 1, 2012 (''RSFI Memorandum''). A copy of the RSFI Memorandum is located in the Commission's public file for SR–FINRA–2011–058 at *http://www.sec.gov/comments/sr-finra-2011–058/finra2011058.shtml.*

[134] In Amendment No. 2, FINRA stated that it reviewed data for 32 randomly-selected days between May and December 2011 and found that the number of customer limit orders displayed would increase from approximately 85% under the Rule's current tiers to 96% under the Rule's revised tiers. As noted above, the RSFI staff concluded that the number of customer limit orders displayed would increase from 92.5% to 97.5%. The RSFI Staff Analysis notes that the RSFI staff considered only new customer orders; routed orders were

estimated that the proposed tier sizes included in Amendment No. 1 might reduce the transaction costs for executed limit orders that would be newly visible by an upper bound of $7,173 per day, or 1.75% of dollar volume for these limit order executions.

The Commission believes that the RSFI Staff Analysis supports FINRA's rationale for the proposed rule change, as amended, in that there would be a material increase in the number of customer limit orders to be displayed under the revisions to Rule 6433. OTC Markets claimed that FINRA's analysis failed to account for the fact that FINRA's Rule 6460 requires a market maker that receives customer limit orders to aggregate those orders for purposes of the limit order display rule.[135] In response, FINRA stated that many of the 10,000 OTC equity securities quoted on inter-dealer quotation systems trade infrequently and at widely varying volume levels each day.[136] FINRA noted that, based on its review of quotation and trade data for OTC equity securities over a two week period, less than three percent of OTC equity securities with a priced quotation trade 100 or more times per day.[137]

C. Whether the Proposal Would Result in an Impact on Liquidity and Volatility

Knight argued that FINRA had not adequately demonstrated that the proposed revisions to the minimum quotation size requirements for OTC equity securities would benefit investors and instead countered that the proposal would degrade the quality of the market for these securities.[138] Knight also stated that the proposal could impact market liquidity and increase costs to market makers, which could result in market makers' departure from the OTC market.[139] Both Knight and OTC Markets urged the Commission to undertake an economic analysis of the anticipated effects of the proposal as part of its consideration of the proposed rule change and suggested that, if the Commission decided to move forward with the proposal, it should consider approving the proposed changes to the Rule's tier structure on a pilot basis.

The Commission recognizes that FINRA's proposal involves a balancing of potentially competing forces. Following the May 2011 implementation of Rule 6460, which requires the display of certain customer limit orders in OTC equity securities, FINRA reviewed OATS data and concluded that, for OTC equity securities priced between $0.51 and $0.9999 per share, a significant percentage of customer limit orders were not eligible for display under the Rule.[140] As the Commission noted when it approved FINRA's proposed rule change to adopt Rule 6460, ''FINRA's limit order display proposal marks a positive step in efforts to improve the transparency of OTC Equity Securities and the handling of customer limit orders in this market sector.'' [141] FINRA's proposal to amend Rule 6433 in a manner that would result in a greater number of customer limit orders being displayed could further increase transparency, and promote competition and narrow spreads, in the OTC market. The Commission notes that OTC equity securities historically have been subject to Commission action in part because they lack transparency.[142]

On the other hand, Knight and OTC Markets expressed concern that FINRA's proposal would lead to a diminution of liquidity and efficiency for OTC equity securities and potentially exacerbate volatility in this market segment.[143] Both commenters believed that market makers would reduce their quoted sizes to conform to the proposed lower tier sizes.[144] While OTC Markets did not dispute that FINRA's proposal would increase the number of displayed customer limit orders, it believed that a ''decrease in displayed proprietary liquidity will overwhelmingly offset the benefit of the increased number of customer limit orders displayed.'' [145]

Although the Commission recognizes these commenters' concerns regarding the potential negative impact of FINRA's proposal on the OTC market,[146] the Commission notes that they offered limited data supporting their claims.[147] In addition, as discussed above, as well as increasing the number of customer limit orders eligible for display and the potential for better executions, arguments can be made that FINRA's proposal will benefit the OTC market by facilitating market making activity, reducing spreads and increasing liquidity. While market makers may tend to reduce their quoted size to the minimum required by FINRA's rules,[148] the reduction in capital commitment per security could allow them to make markets in a wider range of OTC equity securities. This could enhance market maker competition and—along with competition from customer limit orders—result in a reduction in spreads in the OTC market. While the displayed size at the tighter inside price may

duplicative and therefore were removed from the sample. *See* RSFI Staff Analysis, *supra* note 133.

[135] *See* OTC Markets Letter I at pp. 2–3. *See also Regulatory Notice* 10–42 (September 2010) (''firms must aggregate same-priced customer limit orders in OTC Equity Securities * * *.'') (citing Securities Exchange Act Release No. 37619A (September 6, 1996), 61 FR 48290 (September 12, 1996) (adopting Rule 11Ac1–4 under the Act, which requires the display of customer limit orders priced better than a specialist's or OTC market maker's quote. Rule 11Ac1–4 was subsequently redesignated as Rule 604 under Regulation NMS) (''Order Handling Rules Release'')).

[136] *See* FINRA Response I at p. 3.

[137] *Id.*

[138] *See* Knight Letter I at p. 1.

[139] *See* Knight Letter I at p. 2.

[140] *See* Notice at p.65308 and Amendment No. 2 at p. 7.

[141] *See* NMS–Principled Rules Approval Order, *supra* note 4.

[142] *See generally* Securities Exchange Act Release No. 64612 (June 7, 2011) (suspension of trading in common stock of 17 companies trading in OTC markets); Securities Exchange Act Release No. 66980 (May 14, 2012) (suspension of trading in common stock of 379 companies quoted on OTC Link). *See also Catton* v. *Defense Technology Systems, Inc.,* 457 F. Supp. 2d 374 (S.D.N.Y. 2006); *S.E.C.* v. *Simmons,* 2008 WL 7935266 (M.D.Fla. Apr 25, 2008); *SEC* v. *Irwin Boock, Stanton B.J. DeFreitas, Nicolette D. Loisel, Roger L. Shoss, and Jason C. Wong, Birte Boock, and 1621566 Ontario, Inc.,* 2011 WL 3792819 (S.D.N.Y. August 25, 2011), *reconsideration denied,* 2011 WL 5417106 (S.D.N.Y. November 9, 2011).

[143] *See* OTC Markets Letter 1 at p. 3; OTC Markets Letter III at pp. 4–6; OTC Markets Letter IV at pp. 2–3; OTC Markets Letter V at p. 2; and Knight Letter I at pp. 1–2.

[144] *See* OTC Markets Letter 1 at p. 3; OTC Markets Letter III at p. 6; and Knight Letter I at pp. 1–2.

[145] *See* OTC Markets Letter III at p. 7.

[146] OTC Markets stated that FINRA, in its amended proposal, made a minimal effort to protect proprietary liquidity and to research the amended proposal's ''probable negative effect on proprietary liquidity.'' *See* OTC Markets Letter V at p. 6.

[147] OTC Markets' commented that it analyzed the impact of the proposal with respect to share volume, dollar volume and number of trades, based on trade data for October 27, 2011. *See* OTC Markets Letter III at pp. 5–7. According to OTC Markets, its analysis suggested that the proposed rule would not significantly increase liquidity but would impose a direct cost on investors, particularly investors placing marketable orders. The Commission notes that OTC Markets' analysis was based on the tier sizes set forth in the Original Proposal. *See* Section V.D. below for a reference to OTC Markets' analysis of the impact of the revisions to the Rule proposed in Amendment No. 1. The Commission believes that FINRA's proposed minimum quotation size requirements and the operation of those new quote size requirements as a pilot program, as set forth in Amendment No. 1, are designed to address the concerns of this commenter and could mitigate potential adverse impacts the proposal could have on dealers and investors.

[148] The Commission also notes that the proposed rule change does not mandate that market makers in OTC equity securities conform to the new tier sizes. In fact, market makers would continue to have the ability to quote at sizes greater than the new minimum tier sizes. As the Commission previously found, when OTC market makers were required to display only 100 shares regardless of the price of the shares, the trading practices of active market makers were to display higher liquidity than the minimum. *See* Securities Exchange Act Release No. 32570 (July 1, 1993), 58 FR 36725 (July 8, 1993) (Order Approving Proposed Rule Change by the National Association of Securities Dealers, Inc. Relating to Quotation Size Requirements for Market Makers in OTC Equity Securities).

decline, the overall impact on liquidity—looking at the cumulative depth available—may be neutral or positive. If this were the case, the impact of FINRA's proposal on volatility could be neutral or positive as well.

Because of the uncertainty of the actual impact of FINRA's proposal on market maker behavior, however, the Commission believes that it is necessary to conduct a meaningful review of data collected during the pilot period to credibly assess this aspect of the proposed rule change.[149] The Commission notes that, in Amendment No. 2, FINRA committed to provide the Commission with specified data to assist the Commission in its assessment of the impact of the pilot on the OTC market.[150] Further, FINRA committed to provide, at least 60 days before the conclusion of the pilot, its own assessment of the impact of the pilot, addressing the concerns raised by commenters regarding the efficacy of the pilot in achieving its intended effects. Moreover, FINRA committed to revisit the pilot program during its pendency should an analysis of the data show degradation in liquidity and other factors indicating that the revisions to the Rule are having an adverse effect on OTC equity securities. Finally, the Commission notes that FINRA's adjustment of the minimum quotation sizes in Amendment No. 1 was designed to address some of the concerns expressed by commenters with respect to the impact of the Original Proposal on the quality of the OTC market.[151]

Knight stated that the Commission should ''properly evaluate the costs and benefits'' associated with FINRA's proposal and other SRO proposed rule changes.[152] Similarly, OTC Markets requested that the Commission conduct a ''thorough economic analysis'' of the effects of FINRA's proposal on the OTC market.[153] As noted above, RSFI staff conducted an empirical analysis relating to the potential effects of FINRA's proposal on the display of customer limit orders and the transaction costs for executed customer limit orders.[154] In addition, FINRA has committed to provide the Commission with data necessary to evaluate the impact of the pilot on the OTC market, as well as with its own assessment thereof. The Commission notes that interested persons are welcome to submit additional comments and empirical evidence during the pilot period with respect to, among other things, the operation of the revised minimum quotation size requirements, their effectiveness in achieving their intended goals, and the costs associated therewith. The Commission will take such comments, as well as empirical evidence, submitted by interested persons during the pilot period into account in considering whether to approve, in accordance with Section 19(b) of the Act, any FINRA proposed rule change that would make the pilot permanent or would make any other changes to the pilot.

D. Pilot Program

In letters commenting on the Original Proposal, Knight and OTC Markets suggested that FINRA implement its revised minimum quotation requirements as a pilot program.[155] OTC Markets, for example, would ''support any action by the Commission to promote a pilot program to better determine the effects of a change in tier sizes in the OTC Market.''[156]

In response to these and other suggestions of commenters, FINRA submitted Amendment No. 1 to revise the price and size tiers in comparison to the Original Proposal and committed to operate the revised Rule as a one-year pilot program. In responding to the Commission's notice of Amendment No. 1,[157] Knight offered its support for a pilot program so that the impact of the revised Rule could be evaluated.[158] Knight, however, expressed the view that a three- to four-month pilot program would suffice for FINRA to gather the necessary data for its analysis. Knight remarked that the potential impact of the newly-enacted JOBS Act must be considered in connection with the proposed revisions to Rule 6433. Knight pointed to the provision of the JOBS Act that requires the Commission to study the impact of decimalization, including its impact on small and mid-sized issuers' securities. Knight urged that the Commission's study of minimum tick size requirements and FINRA's proposed minimum tier size requirements for OTC equity securities be evaluated together.

OTC Markets also submitted a comment letter in response to the Commission's notice of Amendment No. 1.[159] OTC Markets criticized the revised proposal in Amendment No. 1 because, in OTC Markets' view, FINRA did not include a substantial analysis to support its latest proposed tier thresholds. OTC Markets stated that it conducted an internal study that indicated that, under the proposal set forth in Amendment No. 1, approximately 51% of the securities with priced quotes on its OTC Link platform would experience considerable reductions in liquidity. OTC Markets remarked that the Commission's impending tick size study could incorporate an analysis of the effects of the amended proposed rule change.

The Commission notes that initially both Knight and OTC Markets suggested that FINRA adopt the proposal on a pilot basis. Knight continues to favor a pilot program, albeit for a period of time shorter than the one year proposed by FINRA. OTC Markets, however, states that FINRA and the Commission first should seek academics and economists to conduct a study of the proposal and then consider a three-month pilot

[149] With respect to the comment from Knight that the proposed rule change would have an adverse impact on both dealers and investors, the Commission preliminarily believes that the revised proposal, as described in Amendment No. 1, would facilitate the display of additional customer orders while still requiring a reasonable commitment of liquidity from market makers. *See* Knight Letter I at pp. 1–2.

[150] In Amendment No. 2, FINRA committed to provide the following data to the Commission, on a monthly basis, to allow its staff to evaluate the impact of the pilot: the price of the first trade of each trading day executed at or after 9:30:00 a.m., based on execution time; the price of the last trade of each trading day executed at or before 4:00:00 p.m., based on execution time; daily share volume; daily dollar volume; number of limit orders from customers and in total; percentage of day the size of the BBO (*i.e.,* best bid and offer on FINRA's OTCBB facility and OTC Link) equals minimum quote size; number of market makers actively quoting; number of executions from a limit order and number of limit orders at the BBO or better by tier size from a customer and in total; time-weighted quoted spread; effective spread; time-weighted quoted depth (number of shares) at the inside; and time-weighted quoted depth (dollar value of shares) at the inside.

[151] OTC Markets suggested that FINRA bolster liquidity in the OTC equity market by allowing a broker-dealer that displays liquidity in an OTC equity security and subsequently receives a customer limit order in that security at a price equal to the firm's proprietary quote to ''trade in parity'' with its customer. *See* OTC Markets Letter V at p. 6. The Commission notes that this suggestion would require FINRA to file a proposed rule change to amend FINRA Rule 5320. FINRA Rule 5320 generally prohibits a member from trading for its own account in an equity security, including OTC equity securities, at a price that is equal to or better than an unexecuted customer limit order in that security, unless the member immediately thereafter executes the customer limit order at the price at which it traded for its own account or better. Because an amendment to Rule 5320 is not a matter currently before the Commission, the Commission is not taking any action on such a proposal at this time.

[152] *See* Knight Letter II at p. 2.

[153] *See* OTC Markets Letter V at p. 7.

[154] *See supra* notes 133 and 134 and accompanying text.

[155] *See* Knight Letter I at p. 2 and OTC Markets Letter IV at p. 3.

[156] *See* OTC Markets Letter IV at p. 3.

[157] *See supra* note 12 (Notice of Amendment No. 1).

[158] *See* Knight Letter II at p. 2.

[159] *See* OTC Markets Letter V.

program. As discussed above, the Commission preliminarily believes that FINRA's proposed rule change should help facilitate the display of more customer limit orders, and thereby increase transparency, promote competition, and potentially narrow spreads and provide better executions in the OTC market. In addition, by reducing the required capital commitment of market makers per security, arguments can be made that FINRA's proposal may enhance market making competition and further reduce spreads. The Commission recognizes, however, that Knight and OTC Markets have deep concerns about the impact of FINRA's proposal on the quality of the OTC market. Although both FINRA and Commission staff analyses have confirmed that FINRA's proposal should increase the number of customer limit orders eligible for display, the Commission believes that the uncertainty regarding the impact of FINRA's proposal on market maker behavior warrants its implementation on a pilot basis. During the pilot period, FINRA will submit the data and analysis described in Amendment No. 2, which will afford the Commission an opportunity to assess the proposal's impact on, among other things, the liquidity of OTC equity securities. Although Knight and OTC Markets were of the view that a one-year pilot period is too long, the Commission believes that a one-year pilot is reasonable to allow the Commission to meaningfully and reliably evaluate its impact of FINRA's proposal on the market for OTC equity securities. In addition, the Commission notes that, in Amendment No. 2, FINRA committed to monitor the impact of the pilot and, if it concludes that the revised tier sizes have a significant negative impact on the OTC market, including on liquidity, to consider rescinding the pilot prior to its expiration.

Finally, both Knight and OTC Markets urged that the Commission assess the impact of the proposed rule change in connection with the tick size study mandated by the JOBS Act.[160] Pursuant to the JOBS Act, the Commission is required, among other things, to study the impact that decimalization has had on the number of initial public offerings, as well as on liquidity for small and middle capitalization company securities. The Commission notes that FINRA's proposal addresses the minimum quotation size requirements for OTC equity securities, and not the pricing increments at which these securities trade. The Commission recognizes that both minimum quotation size requirements and minimum pricing increments can impact liquidity, spreads and other core aspects of the OTC market in similar ways. The Commission believes, however, that it is appropriate to approve FINRA's proposal on a pilot basis to assess its impact on the market for OTC equity securities.

E. Efficiency, Competition, and Capital Formation

Knight and OTC Markets stated that FINRA failed to consider the proposed rule change in light of Section 3(f) of the Act.[161] Section 3(f) requires that whenever, pursuant to the Act, the Commission is engaged in rulemaking, or in the review of an SRO rule, and is required to consider or determine whether an action is necessary or appropriate in the public interest, the Commission shall also consider, in addition to the protection of investors, whether the action will promote efficiency, competition, and capital formation.

As discussed above, the Commission preliminarily believes that the proposed rule change could promote efficiency [162] by increasing the transparency of customer limit orders [163] and potentially narrowing spreads and providing better executions.[164] Currently, better-priced customer limit orders need not be displayed if the size of those orders is below the minimum quotation size for the pertinent OTC equity security.[165] Thus, customers who place such limit orders in a size smaller than the applicable minimum quotation size would not be entitled to have their orders displayed.

The Commission preliminarily believes that, by increasing the display of customer limit orders, spreads in OTC equity securities could be narrowed, allowing market participants to trade at better prices.[166] In addition, although further consideration will be given to the actual impact of the proposed rule change on efficiency during the pilot period, FINRA's proposal—by reducing the required per security capital commitment by market makers[167]—could incent market makers to make markets in a wider range of OTC equity securities, potentially reducing spreads and increasing liquidity.

The Commission further preliminarily believes that the proposed rule could enhance competition by increasing the number of customer limit orders that are displayed to the market, thereby increasing quote competition and the likelihood of price improvement for OTC equity securities.[168] The Commission acknowledges that the narrowing of spreads that result from the increased display of customer limit orders could result in decreased profits for market makers, thus making them less willing to provide liquidity to the marketplace.[169] However, as discussed above, the decrease in the minimum quotation size requirements also could

[160] *See supra* note 108.

[161] 15 U.S.C. 78c(f). *See also* OTC Markets Letter III at p. 2; Knight Letter II at p. 1 (incorporating views of OTC Markets Letter III); OTC Markets Letter IV at p. 2; OTC Markets Letter V at p. 5.

[162] Knight expressed concern that the proposal ''could have far-reaching effects on the liquidity and efficiency of the OTC market * * *.'' *See* Knight Letter I at p. 2. OTC Markets expressed concern regarding the ''potential negative effects on displayed liquidity and costs related to the execution of marketable orders.'' *See* OTC Markets Letter IV at p. 2.

[163] *See* NMS–Principled Rules Approval Order, *supra* note 4 at 37494 (''The Commission believes that extending limit order display requirements to OTC Equity Securities is reasonably designed to increase transparency in the market for OTC Equity Securities.'')

[164] *See id.* (''As it has previously stated, the Commission believes that limit orders are a valuable component of price discovery, and that uniformly requiring display of such orders will encourage tighter, deeper, and more efficient markets.''); *see also* Order Handling Rules Release, supra note 135 at 48294 (''The display of limit orders can be expected to narrow the bid-ask spread when this buying and selling interest is priced better than publicly disclosed prices.'').

[165] Customer limit orders priced at the market maker's quote also need not be displayed depending on whether the size of the customer limit order is *de minimus* and whether the market maker's quote is at the best bid or offer. *See* FINRA Rule 6460.

[166] *See* NMS–Principled Rules Approval Order, supra note 4 at 37494. *See also generally* Michael J. Barclay, et al., Effects of Market Reform on the Trading Costs and Depths of Nasdaq Stocks, Journal of Finance (May 6, 2003); Foucault, et al., Working Paper: Limit Order Book as a Market for Liquidity (May 30, 2001) (available at *http://papers.ssrn.com/sol3/papers.cfm?abstract_id=269908*).

[167] *See* NMS–Principled Rules Approval Order (''The Commission notes that FINRA's limit order display proposal acknowledges the role that market makers traditionally have played in providing price discovery and liquidity to the OTC Equity Securities market.'').

[168] *See id. See also* Order Handling Rules Release, *supra* note 135 at 48294 (''The uniform display of limit orders also will lead to increased quote-based competition. Market makers will not only be competing amongst themselves, but also against customer limit orders represented in the quote.''). *See also generally* Michael J. Barclay, et al., Effects of Market Reform on the Trading Costs and Depths of Nasdaq Stocks, Journal of Finance (May 6, 2003); Jeffrey Smith, The Effects of Order Handling Rules and 16ths on Nasdaq: a Cross-sectional Analysis, NASD Working Paper 98–02 (October 29, 1998).

[169] *See* Amendment No. 2, supra note 14 at p. 8. *See also* Knight Letter I at p. 2 (''we do have concerns that any increase in costs to market making liquidity providers may further result in additional departures of market makers * * * .''); OTC Markets Letter III at p. 6 (''Smaller tier sizes also have the effect of reducing passive liquidity providers that create additional liquidity by competing at the inside price for investor executions, as the liquidity is based on a multiple of the inside size.'').

result in increased quoting by market makers because of the reduced capital commitment required per security, and thus increase competition among market makers. As with the proposal's effects on efficiency, the Commission will give further consideration to the actual impact of the proposed rule change on competition during the pilot period.

The Commission also has considered whether the proposed rule change would promote capital formation.[170] The Commission notes that increased display of customer limit orders could result in narrower spreads which, in turn, could attract more investors to the marketplace. Increased investor activity could result in more efficient pricing and increased liquidity. Efficient pricing and increased liquidity could make the OTC marketplace a more attractive venue for capital formation, benefiting small issuers.[171] However, if the revised tier sizes result in less activity by market makers, overall liquidity in the marketplace could decline. Such a decline could result in increased volatility and less efficient pricing for OTC equity securities. As a result, the OTC marketplace could become a less attractive venue for capital formation and thus negatively impact smaller issuers. The Commission preliminarily believes the overall impact of the proposal on the OTC marketplace will not be significantly negative or positive, but will monitor the impact of the revised tier sizes in connection with the pilot program.

VI. Accelerated Approval

The Commission finds goods cause, pursuant to Section 19(b)(2) of the Exchange Act,[172] for approving the proposed rule change, as modified by Amendment Nos. 1 and 2 thereto, prior to the 30th day after publication of notice of the filing of Amendment No. 2 in the **Federal Register**. The proposed rule change, as amended, was informed by FINRA's consideration and incorporation of many suggestions made in comments to the Original Proposal, the Order Instituting Proceedings and Amendment No. 1. Amendment No. 2 reflects FINRA's efforts to adjust its proposal to better address commenters' concerns and allow the impact of its proposal to be studied on a pilot basis. The proposed rule change, as amended, will allow the Commission to further consider, during the pilot period, issues raised by commenters with respect to certain aspects of the proposal, and to benefit from actual experience with the revised tier sizes that are being approved today on a pilot basis. Such further consideration will allow the Commission to consider whether modifications to the proposal are warranted prior to any decision to approve it on a permanent basis.

Accordingly, the Commission finds that good cause exists to approve the proposal, as modified by Amendment Nos. 1 and 2, on an accelerated basis.

VII. Solicitation of Comments

Interested persons are invited to submit written data, views, and arguments concerning the foregoing, including whether Amendment No. 2 to the proposed rule change is consistent with the Act. Comments may be submitted by any of the following methods:

Electronic Comments

- Use the Commission's Internet comment form (*http://www.sec.gov/rules/sro.shtml*); or
- Send an email to *rule-comments@sec.gov*. Please include File Number SR–FINRA–2011–058 on the subject line.

Paper Comments

- Send paper comments in triplicate to Elizabeth M. Murphy, Secretary, Securities and Exchange Commission, 100 F Street NE., Washington, DC 20549–1090.

All submissions should refer to File Number SR–FINRA–2011–058. This file number should be included on the subject line if email is used.

To help the Commission process and review your comments more efficiently, please use only one method. The Commission will post all comments on the Commission's Internet Web site (*http://www.sec.gov/rules/sro.shtml*). Copies of the submission, all subsequent amendments, all written statements with respect to the proposed rule change that are filed with the Commission, and all written communications relating to the proposed rule change between the Commission and any person, other than those that may be withheld from the public in accordance with the provisions of 5 U.S.C. 552, will be available for Web site viewing and printing in the Commission's Public Reference Room on official business days between the hours of 10:00 a.m. and 3:00 p.m. Copies of such filing also will be available for inspection and copying at the principal office of FINRA. All comments received will be posted without change; the Commission does not edit personal identifying information from submissions. You should submit only information that you wish to make available publicly. All submissions should refer to File Number SR–FINRA–2011–058, and should be submitted on or before July 12, 2012.

VIII. Conclusion

It is therefore ordered, pursuant to Section 19(b)(2) of the Act,[173] that the proposed rule change (SR–FINRA–2011–058), as modified by Amendment Nos. 1 and 2, be, and hereby is, approved on an accelerated basis as a one-year pilot.

For the Commission, by the Division of Trading and Markets, pursuant to delegated authority.[174]

Kevin M. O'Neill,

Deputy Secretary.

[FR Doc. 2012–15126 Filed 6–20–12; 8:45 am]

BILLING CODE 8011–01–P

[170] *See* OTC Markets Letter III at p. 4 (''tier sizes should be designed to create the optimum balance to maximize marketplace efficiency and capital formation'').

[171] *See* Amendment No. 1, *supra* note 12 at p. 6, in which FINRA stated that ''the improved display of customer limit orders resulting from the revised minimum quotation sizes will enhance the quality of published quotations for OTC Equity Securities and enhance competition and pricing efficiency in the market for OTC Equity Securities, which also should have a positive impact on capital formation.''

[172] 15 U.S.C. 78s(b)(2).

[173] 15 U.S.C. 78s(b)(2).

[174] 17 CFR 200.30–3(a)(12).

DEPARTMENT OF TRANSPORTATION

Federal Aviation Administration

Technical Standard Order (TSO)-C65a, Airborne Doppler Radar Ground Speed and/or Drift Angle Measuring Equipment (for Air Carrier Aircraft)

AGENCY: Federal Aviation Administration (FAA), DOT.

ACTION: Notice of intent to cancel Technical Standard Order (TSO)-C65a, Airborne Doppler radar ground speed and/or drift angle measuring equipment (for air carrier aircraft).

SUMMARY: This notice announces the FAA's intent to cancel TSO-C65a, Airborne Doppler radar ground speed and/or drift angle measuring equipment (for air carrier aircraft).

The effect of the cancelled TSO will result in no new TSO-C65a design or production approvals. However, cancellation will not affect current production of articles with an existing TSO authorization. Articles produced under an existing TSOA can still be installed per the existing airworthiness approvals, and all applications for new airworthiness approvals will still be processed.

DATES: Comments must be received on or before July 23, 2012.

FOR FURTHER INFORMATION CONTACT: Mr. Albert Sayadian, AIR–130, Federal Aviation Administration, 470 L'Enfant Plaza, Suite 4102, Washington, DC 20024. Telephone (202) 385–4652, fax (202) 385–4651, email to: *albert.sayadian@faa.gov.*

SUPPLEMENTARY INFORMATION:

Comments Invited

You are invited to comment on the cancellation of the TSO-C65a by submitting written data, views, or arguments to the above address. Comments received may be examined, both before and after the closing date at the above address, weekdays except federal holidays, between 8:30 a.m. and 4:30 p.m. The Director, Aircraft Certification Service, will consider all comments received on or before the closing date.

Background

The Doppler radar ground speed and/or drift angle measuring equipment described by this TSO was used to provide inputs to semiautomatic self-contained dead reckoning navigation systems which were not continuously dependent on information derived from ground based or external navigation aids. The system employed radar signals to detect and measure ground speed and drift angle, using the aircraft compass system as its directional reference. This approach is less accurate than Inertial Navigation Systems (INS), and the use of an external reference is required for periodic updates if acceptable position accuracy is to be achieved on long range flights. Use of INS and Global Positioning System (GPS) has rendered TSO-C65a Doppler sensor equipment that provides inputs to dead reckoning navigation systems obsolete.

On August 18, 1983, the FAA published TSO-C65a, Airborne Doppler radar ground speed and/or drift angle measuring equipment (for air carrier aircraft). The FAA has no record of any TSO-C65a applications from 1990 onward. Our research indicates no new TSO-C65a applications are in progress, and no authorized manufacturers are manufacturing, advertising, or selling TSO-C65a compliant equipment. Given the obsolescence of the equipment, and the lack of industry interest in new TSO-C65a product designs, we propose cancelling TSO-C65a.

Issued in Washington, DC, on June 18, 2012.

Susan J.M. Cabler,

Assistant Manager, Aircraft Engineering Division, Aircraft Certification Service.

[FR Doc. 2012–15209 Filed 6–20–12; 8:45 am]

BILLING CODE 4910–13–P

DEPARTMENT OF TRANSPORTATION

National Highway Traffic Safety Administration

[Docket No. NHTSA–2012–0084]

National Automotive Sampling System

AGENCY: National Highway Traffic Safety Administration (NHTSA), Department of Transportation (DOT).

ACTION: Notice and request for comments.

SUMMARY: The NHTSA is conducting a comprehensive review of the National Automotive Sampling System (NASS) research design and data collection methods as part of a major effort to modernize the system. Users of NASS and crash data may comment on the future utility of current data elements, recommend additional data elements and attributes, and describe their anticipated data needs.

DATES: Please submit all comments to the Docket by July 20, 2012.

ADDRESSES: You may submit comments to the docket number identified in the heading of this document by any of the following methods:

- *Federal eRulemaking Portal:* Go to *http://www.regulations.gov.* Follow the online instructions for submitting comments.
- *Mail:* Docket Management Facility: U.S. Department of Transportation, 1200 New Jersey Avenue SE., West Building Ground Floor, Room W12–140, Washington, DC 20590–0001.
- *Hand Delivery or Courier:* 1200 New Jersey Avenue SE., West Building Ground Floor, Room W12–140, between 9 a.m. and 5 p.m. ET, Monday through Friday, except Federal holidays.
- *Fax:* 202–493–2251.

Note that all comments received will be posted without change to *http://www.regulations.gov,* including any personal information provided. Please see the ''Privacy Act'' heading below.

Privacy Act: Anyone is able to search the electronic form of all comments received into any of our dockets by the name of the individual submitting the comment (or signing the comment, if submitted on behalf of an association, business, labor union, etc.). You may review DOT's complete Privacy Act Statement in the **Federal Register** published on April 11, 2000 (65 FR 19477–78) or you may visit *http://DocketInfo.dot.gov.*

Confidential Information: If you wish to submit any information under a claim of confidentiality, you should submit three copies of your complete submission, including the information you claim to be confidential business information, to the Chief Counsel, NHTSA, 1200 New Jersey Avenue SE., Washington, DC 20590–0001. In addition, you should submit two copies, from which you have deleted the claimed confidential business information, to Docket Management at the address given above under **ADDRESSES.** When you send a comment containing information claimed to be confidential business information, you should include a cover letter setting forth the information specified in our confidential business information regulation. (49 CFR part 512.)

Docket: For access to the docket to read background documents or comments received, go to *http://www.regulations.gov* or the street address listed above. Follow the online instructions for accessing the dockets.

FOR FURTHER INFORMATION CONTACT: For questions relating to the redesign effort, please contact Donna Glassbrenner, Mathematical Analysis Division, NHTSA, telephone: (202) 366–3962, email: *Donna.Glassbrenner@dot.gov.* She may also be reached at 1200 New Jersey Avenue SE., Washington, DC 20590.

SUPPLEMENTARY INFORMATION: NHTSA is undertaking a modernization effort to upgrade the National Automotive Sampling System (NASS) by improving the information technology (IT) infrastructure, updating and prioritizing the data collected, reselecting the sample sites and sample sizes, re-examining the electronic formats in which the crash data files are made available to the public, and improving data collection methods and quality control procedures, among other activities.

NASS collects crash data on a nationally representative sample of police-reported motor vehicle traffic crashes and related injuries. NASS data are used by Federal, State, and local government agencies, as well as by industry and academia in the U.S. and around the world. The data enable stakeholders to make informed regulatory, program, and policy decisions regarding vehicle design and traffic safety. The NASS system currently has two components: The General Estimates System (GES) and the Crashworthiness Data System (CDS).

While the GES captures information on all types of traffic crashes, the CDS focuses on more severe crashes involving passenger vehicles to better document the consequences to vehicles and occupants in crashes—i.e., crashworthiness.

NASS was originally designed in the 1970's, and has not received significant revision since that time with regard to the type of data collected and the sites of data collection. Over the last three decades, NHTSA understands that the scope of traffic safety studies have expanded and the data needs of the transportation community have increased and significantly changed. In addition, the distribution of the U.S. population has shifted over the past 23 years, and there is a growing need for the collection of information that addresses issues of crash avoidance. Recognizing the importance of this data, NHTSA is pursuing data improvement initiatives that will enhance the quality of the data collected and the overall effectiveness of the NASS.

This modernization effort includes the following major objectives:

- Propose data elements for the crash investigation portion of NASS that are responsive to the current and future needs of both internal and external data users;
- Develop a detailed, executable sample design and data collection protocol blueprint that meets data needs in an effective and efficient manner while still maintaining national representativeness;
- Modernize the information technology (IT) infrastructure;
- Re-examine the electronic formats in which the crash data files are made available to the public; and
- Examine using new data collection methods and quality control procedures to improve data quality and timeliness.

In order to meet these objectives, NHTSA invites stakeholders to comment on the current data elements, propose new data elements, make suggestions on the research design and data collection protocol for the modernized study, and make any other suggestions they feel NHTSA should consider to improve crash data.

Current NASS data elements, coding instructions, and descriptive materials can be reviewed on NHTSA's Web site at: *http://nhtsa.gov/NASS.*

Terry Shelton,

Associate Administrator for the National Center for Statistics and Analysis.

[FR Doc. 2012–15228 Filed 6–20–12; 8:45 am]

BILLING CODE 4910–59–P

DEPARTMENT OF TRANSPORTATION

Pipeline and Hazardous Materials Safety Administration

[Docket ID PHMSA–2012–0142]

Pipeline Safety: Notice of Public Workshop To Discuss Implementing Incorporation by Reference Requirements of Section 24 of the Pipeline Safety, Regulatory Certainty, and Job Creation Act of 2011

AGENCY: Pipeline and Hazardous Materials Safety Administration (PHMSA), DOT.

ACTION: Request for information and notice of public workshop.

SUMMARY: This notice is to advise interested and affected persons that PHMSA will conduct a public workshop to discuss Section 24 of the recently-passed Pipeline Safety, Regulatory Certainty, and Job Creation Act of 2011 (Act) and PHMSA's implementation challenges with Section 24. Section 24 of the Act requires, within one year of enactment (January 2013), that PHMSA no longer incorporate, in whole or in part, voluntary consensus standards by reference into its regulations unless those standards have been made available free of charge to the public on the Internet. The workshop will provide interested persons with an opportunity to submit written and oral comments and participate in discussions concerning the legal, financial, policy, practical and other challenges with implementing Section 24 by January 2013.

DATES: The public workshop will be held on July 13, 2012.

ADDRESSES: The public workshop will be held from 8:00 a.m. to 3:00 p.m. EDT in the West Building, Oklahoma Room of the U.S. Department of Transportation, 1200 New Jersey Avenue SE., Washington, DC 20590, Phone: 202–366–4400, Fax: 202–366–7041. Please visit *http://phmsa.dot.gov* and click on this public workshop to register. There is no registration fee to attend the public workshop. Name badge pickup and onsite registration will be available starting at 7:30 a.m. Refer to the meeting Web site for updated information, agenda, and times at *http://phmsa.dot.gov.*

The public workshop will include an overview of the issue in the morning, and a panel discussion by various experts and stakeholders who are affected by regulations promulgated by PHMSA. After the discussion, time will be allotted for the general public to speak. All requests from the public to speak at the workshop must include a description of what will be said, contact information to be used to notify the requestor of the status of his/her request (phone number on which a message may be left, or email), and the subject/attention line (or on the envelope if by mail): ''Implementing Incorporation by Reference (IBR) Requirements of Section 24.'' Each participant will be allotted five minutes to speak. Please contact Jewel Smith, Office of Chief Counsel, to request to speak at the public workshop at 202–366–4400, or email at *jewel.smith@dot.gov.*

Members of the public may submit written comments. Comments should reference Docket No. PHMSA–2012–0142. Comments may be submitted in the following ways:

- *E-Gov Web Site: http://www.regulations.gov.* This site allows the public to enter comments on any **Federal Register** notice issued by any agency. Follow the instructions for submitting comments.
- *Fax:* 1–202–493–2251.
- *Mail:* Docket Management System, U.S. Department of Transportation (DOT), 1200 New Jersey Avenue SE., Room W12–140, Washington, DC 20590.
- *Hand Delivery:* DOT, Docket Management System, Room W12–140, on the ground floor of the West Building, 1200 New Jersey Avenue SE., Washington, DC between 9:00 a.m. and 5:00 p.m., Monday through Friday, except Federal holidays.

Instructions: Identify Docket No. PHMSA–2012–0142 at the beginning of your comments. If you submit your comments by mail, submit two copies. If you wish to receive confirmation that PHMSA has received your comments, include a self-addressed stamped postcard. Internet users may submit comments at *http://www.regulations.gov.*

Note: Comments will be posted without changes or edits to *http://www.regulations.gov* including any personal information provided. Please see the Privacy Act statement immediately following for additional information.

Privacy Act Statement: Anyone may search the electronic form of all comments received for any of our dockets. You may review DOT's complete Privacy Act Statement in the **Federal Register** published April 11, 2000 (65 FR 19477).

Information on Services for Individuals with Disabilities: For information on facilities or services for individuals with disabilities or to request special assistance during the workshop, please contact Jewel Smith at

202–366–4400, or by email at *jewel.smith@dot.gov.*

Copies of the presentations will be available on the public workshop Web site and in the docket PHMSA–2012–0142 at *http://www.regulations.gov,* within 30 days following the workshop.

Webcasting: The public workshop will be Webcast. Please refer to this public workshop at *http://phmsa.dot.gov* for more information and the link to the Webcast.

FOR FURTHER INFORMATION CONTACT: Jewel Smith at 202–366–4400, or by email at *jewel.smith@dot.gov.*

SUPPLEMENTARY INFORMATION: On January 3, 2012, President Obama signed the Pipeline Safety, Regulatory Certainty, and Job Creation Act of 2011, Public Law 112–90 (Act). Section 24 of the Act requires, within one year of enactment (January 2013), that PHMSA no longer incorporate, in whole or in part, voluntary consensus standards by reference into its regulations unless those standards have been made available free of charge to the public on the Internet. Section 24 states ''Section 60102, as amended by this Act, is further amended by adding at the end the following: '(p) Limitation on Incorporation of Documents by Reference.—Beginning 1 year after the date of enactment of this subsection, the Secretary may not issue guidance or a regulation pursuant to this chapter that incorporates by reference any documents or portions thereof unless the documents or portions thereof are made available to the public, free of charge, on an Internet Web site.' ''

When Federal agencies write regulations, the National Technology Transfer and Advancement Act (NTTAA) of 1995 (Pub. L. 104–113; March 7, 1996) and Office of Management and Budget (OMB) Circular No. A–119 titled ''Federal Participation in the Development and Use of Voluntary Consensus Standards and in Conformity Assessment Activities'' directs them to use voluntary consensus standards, except when an agency determines that such use ''is inconsistent with applicable law or otherwise impractical.'' Voluntary consensus standards are technical standards that are developed, published and adopted by domestic and international organizations, which have collaborated to agree upon best technical practices. Generally, these standards are updated approximately every three to five years to reflect improvements to previous technology or practices. The standards, which are often hundreds or thousands of pages, are incorporated by reference into a regulation in whole or in part, saving the government money and shortening the length of the regulatory process by incorporating existing standards instead of creating government-unique standards. Incorporation by reference allows the voluntary consensus standards to be treated as if they were written into the regulations and treated as if they were published in the **Federal Register** and the Code of Federal Regulations. Thus, these standards have the effect of law and can be enforced accordingly.

The policies in the Circular and the statutory language of the NTTA were intended to reduce to a minimum the reliance by agencies on government-unique standards and to rely on voluntary consensus standards (VCS), whenever possible, as well as keep the time and costs to write and issue standards reasonable on behalf of the Federal government. Federal agencies also received guidance from the Circular regarding agencies' participation in the various governmental and private sector bodies that develop consensus standards, which are referred to as standards developing organizations (SDOs).

SDOs normally have a copyright or other intellectual property interest in the standards they develop, and therefore often charge a fee for access. Those who are governed by the regulations currently purchase the standards, in the instances where they are not made available for free. Without paying a fee, those who are affected by a regulation that incorporates a standard but are not regulated by it, may not have access to the laws that affect them. In some instances, a regulation may only incorporate a section, a chapter or other portion of the VCS; yet, an interested party must buy the entire VCS to access the incorporated text.

Currently, PHMSA incorporates approximately 60 VCS by reference into 49 CFR Part 192—Transportation of Natural and Other Gas by Pipeline: Minimum Federal Safety Standards; 49 CFR Part 193—Liquefied Natural Gas Facilities: Federal Safety Standards; and 49 CFR Part 195—Transportation of Hazardous Liquids by Pipeline. These VCS, in turn, incorporate by reference additional consensus standards. Therefore, purchasing all relevant standards could be significantly expensive for a small business, a non-profit organization or a public citizen.

PHMSA has received correspondence regarding the implementation of Section 24 from stakeholders, including SDOs, regulated entities and public safety groups. Based on the correspondence and on PHMSA's operational capacity, budget and analyses, Section 24, at a minimum, would have the following effects.

Financial

- Costs to government to purchase incorporated standards for free public access would increase substantially.
- Impact to some SDOs for making their standards available without compensation would be substantial and immediate.
- Costs to government would increase dramatically and immediately if PHMSA must write its own standards or purchase the right to freely publish standards from SDOs.

Practical

- Volume and complexity of regulations would increase if the government wrote its own standards.
- There is a lack of government resources and technical expertise to draft standards technically equivalent to those available through existing SDOs.
- Time frames to write and promulgate rules would increase significantly if the government created its own standards.
- Government regulations with government-unique standards would not be likely to keep pace with technological and safety advancements made in the private sector.
- SDOs standards may get more candid input, and broader involvement, from stakeholders as standards are being developed in the current model than would be true under a government-unique standards process.

Legal

- Small businesses would likely look to the Small Business Regulatory Enforcement Fairness Act, or other laws, to address any adverse impact to them arising from either the availability of standards, cost of standards, or increased time to promulgate regulations following PHMSA's implementation of Section 24.
- The NTTAA and OMB Circular A–119 should be analyzed further for reconciliation with the requirements of Section 24. Intellectual property laws play a critical role for both in the relationship between the government and the SDOs and in the relationship between the SDOs and its licensors or licensees.

Policy

- Likely inconsistency of U.S. and international standards would arise due to inability to incorporate VCS and difficulty in harmonizing government-unique standards. This inconsistency would be detrimental to safety,

businesses and trade, and promote increased reliance on international standards.

• Safety, compliance and enforcement could be compromised if the regulations become too unwieldy because government would be required to write its own standards, or if a regulated entity does not have access to free standards.

• Transparency in government requires that citizens have access to the laws that govern and affect them.

• Meeting Section 508 requirements that govern the accessibility of government documents for people with disabilities is also a consideration.

PHMSA and stakeholders must continue to strive to reach a reasonable and feasible solution. Consequently, PHMSA will hold a public workshop to provide an open forum for exchanging information on the challenges associated with implementing the requirement of Section 24. Specifically, this public workshop will facilitate a discussion among stakeholders to share their respective recommendations related to the following objectives:

1. Provide an overview to the public, regulated entities, other Federal and state regulatory agencies, legislators in Congress, advocacy groups, public safety professionals, the international community and the standards developing organizations about the legal, practical, financial and policy considerations involved with implementing Section 24.

2. Identify constraints, related costs and issues with implementing Section 24 by January 2013.

3. Collect public input that will help guide PHMSA and DOT to a reasonable, efficient, and sound implementation strategy and plan.

Preliminary Agenda for the Public Workshop

• Event Objectives/Summary of Ongoing Activities.

• Panel 1—What is IBR? (Overview of the NTTAA, OMB Circular A119, Section 24 of the Pipeline Safety, Regulatory Certainty, and Job Creation Act of 2011, and Current Issues Related to Implementing Section 24).

• Panel 2—Overview of PHMSA's IBR Usage and Its Impact on Safety and Costs.

• Panel 3—Facilitated Discussion Among Participants.

Please note that there are objectives for each panel and that they are posted on the meeting Web site at *http://phmsa.dot.gov.*

Issued in Washington, DC, on June 15, 2012.

Linda Daugherty,

Deputy Associate Administrator for Policy and Programs.

[FR Doc. 2012–15102 Filed 6–20–12; 8:45 am]

BILLING CODE 4910–60–P

DEPARTMENT OF THE TREASURY

Submission for OMB Review; Comment Request

June 18, 2012.

The Department of the Treasury will submit the following information collection request to the Office of Management and Budget (OMB) for review and clearance in accordance with the Paperwork Reduction Act of 1995, Public Law 104–13, on or after the date of publication of this notice.

DATES: Comments should be received on or before July 23, 2012 to be assured of consideration.

ADDRESSES: Send comments regarding the burden estimate, or any other aspect of the information collection, including suggestion for reducing the burden to the (1) Office of Information and Regulatory Affairs, Office of Management and Budget, Attention: Desk Officer for Treasury, New Executive Office Building, Room 10235, Washington, DC 20503, or email at *OIRA_Submission@OMB.EOP.GOV* and the (2) Treasury PRA Clearance Officer, 1750 Pennsylvania Ave. NW., Suite 8140, Washington, DC 20220, or email at *PRA@treasury.gov.*

FOR FURTHER INFORMATION CONTACT: Copies of the submission(s) may be obtained by calling (202) 927–5331, email at *PRA@treasury.gov,* or the entire information collection request may be found at *www.reginfo.gov.*

Financial Management Service (FMS)

OMB Number: 1510–0042.

Type of Review: Extension without change of a currently approved collection.

Title: Claims Against the U.S. for Amounts Due in Case of a Deceased Creditor.

Form: SF–1055.

Abstract: This form is required to determine who is entitled to funds of a deceased Postal Savings depositor or deceased award holder. The form properly completed with supporting documents enables this office to decide who is legally entitled to payment.

Affected Public: Individuals or Households.

Estimated Total Burden Hours: 180.

Dawn D. Wolfgang,

Treasury PRA Clearance Officer.

[FR Doc. 2012–15171 Filed 6–20–12; 8:45 am]

BILLING CODE 4810–35–P

DEPARTMENT OF THE TREASURY

Submission for OMB Review; Comment Request

June 18, 2012.

The Department of the Treasury will submit the following information collection request to the Office of Management and Budget (OMB) for review and clearance in accordance with the Paperwork Reduction Act of 1995, Public Law 104–13, on or after the date of publication of this notice.

DATES: Comments should be received on or before July 23, 2012 to be assured of consideration.

ADDRESSES: Send comments regarding the burden estimate, or any other aspect of the information collection, including suggestion for reducing the burden, to the (1) Office of Information and Regulatory Affairs, Office of Management and Budget, Attention: Desk Officer for Treasury, New Executive Office Building, Room 10235, Washington, DC 20503, or email at *OIRA_Submission@OMB.EOP.GOV* and to the (2) Treasury PRA Clearance Officer, 1750 Pennsylvania Ave. NW., Suite 8140, Washington, DC 20220, or email at *PRA@treasury.gov.*

FOR FURTHER INFORMATION CONTACT: Copies of the submission(s) may be obtained by calling (202) 927–5331, email at *PRA@treasury.gov,* or the entire information collection request maybe found at *www.reginfo.gov.*

Alcohol and Tobacco Tax and Trade Bureau (TTB)

OMB Number: 1513–0083.

Type of Review: Revision a currently approved collection.

Title: Excise Tax Return.

Form: 5000.24.

Abstract: Businesses, other than those in Puerto Rico, report their Federal excise tax liability on distilled spirits, wine, beer, tobacco products, cigarette papers and tubes on TTB F 5000.24. TTB needs this form to identify the taxpayer and to determine the amount and type of taxes due and paid.

Affected Public: Private Sector: Businesses or other for-profits.

Estimated Total Burden Hours: 133,453.

OMB Number: 1513–0122.

Type of Review: Extension without change of a currently approved collection.

Title: Formula and Process for Domestic and Imported Alcohol Beverages.

Form: 5000.24.

Abstract: This form is used to obtain approval of a formula for malt beverages, wine, and distilled spirits products. It ensures that these products are produced and classified according to federal regulations, and that levels of such products comply with the Federal Alcohol Administrative Act provisions.

Affected Public: Private Sector: Businesses or other for-profits.

Estimated Total Burden Hours: 8,000.

Dawn D. Wolfgang,

Treasury PRA Clearance Officer.

[FR Doc. 2012–15180 Filed 6–20–12; 8:45 am]

BILLING CODE 4810–31–P

DEPARTMENT OF THE TREASURY

Submission for OMB Review; Comment Request

June 18, 2012.

The Department of the Treasury will submit the following information collection request to the Office of Management and Budget (OMB) for review and clearance in accordance with the Paperwork Reduction Act of 1995, Public Law 104–13, on or after the date of publication of this notice.

DATES: Comments should be received on or before July 23, 2012 to be assured of consideration.

ADDRESSES: Send comments regarding the burden estimate, or any other aspect of the information collection, including suggestion for reducing the burden, to (1) Office of Information and Regulatory Affairs, Office of Management and Budget, Attention: Desk Officer for Treasury, New Executive Office Building, Room 10235, Washington, DC 20503, or email at *OIRA_Submission@OMB.EOP.GOV* and (2) Treasury PRA Clearance Officer, 1750 Pennsylvania Ave. NW., Suite 8140, Washington, DC 20220, or email at *PRA@treasury.gov.*

FOR FURTHER INFORMATION CONTACT: Copies of the submission(s) may be obtained by calling (202) 927–5331, email at *PRA@treasury.gov,* or the entire information collection request may be found at *www.reginfo.gov.*

Internal Revenue Service (IRS)

OMB Number: 1545–0205.

Type of Review: Extension without change of a currently approved collection.

Title: Corporate Report of Nondividend Distributions.

Form: 5452.

Abstract: Form 5452 is used by corporations to report their nontaxable distributions as required by IRC 6042(d)(2). The information is used by IRS to verify that the distributions are nontaxable as claimed.

Affected Public: Private Sector: Business or other for-profits.

Estimated Total Burden Hours: 57,885.

OMB Number: 1545–0817.

Type of Review: Extension without change of a currently approved collection.

Title: EE–28–78 (TD 7845) (Final) Inspection of Applications for Tax Exemption and Applications for Determination Letters for Pension and Other Plans.

Abstract: Internal Revenue Code section 6104 requires applications for tax exempt status, annual reports of private foundations, and certain portions of returns to be open for public inspection. Some information may be withheld from disclosure. IRS needs the information to comply with requests for public inspection of the above-named documents.

Affected Public: Private Sector: Business or other for-profits.

Estimated Total Burden Hours: 8,538.

OMB Number: 1545–0916.

Type of Review: Extension without change of a currently approved collection.

Title: EE–96–85 (NPRM) and EE–63–84 (Temporary regulations) Effective Dates and Other Issues Arising Under the Employee Benefit Provisions of the Tax Reform Act of 1984.

Abstract: These temporary regulations provide rules relating to effective dates and other issues arising under sections 91, 223 and 511–561 of the Tax Reform Act of 1984.

Affected Public: Private Sector: Business or other for-profits.

Estimated Total Burden Hours: 4,000.

OMB Number: 1545–1671.

Type of Review: Extension without change of a currently approved collection.

Title: REG–209709–94 (Final) Amortization of Intangible Property.

Abstract: The information is required by the IRS to aid it in administering the law and to implement the election provided by section 197(f)(9)(B) of the Internal Revenue Code. The information will be used to verify that a taxpayer is properly reporting its amortization and income taxes.

Affected Public: Private Sector: Business or other for-profits.

Estimated Total Burden Hours: 1,500.

OMB Number: 1545–2122.

Type of Review: Extension without change of a currently approved collection.

Title: Form 8931, Agricultural Chemicals Security Credit.

Form: 8931.

Abstract: Form 8931 is used to claim the tax credit for qualified agricultural chemicals security costs paid or incurred by eligible agricultural businesses. All the costs must be paid or incurred to protect specified agricultural chemicals at a facility.

Affected Public: Private Sector: Business or other for-profits.

Estimated Total Burden Hours: 389,330.

Dawn D. Wolfgang,

Treasury PRA Clearance Officer.

[FR Doc. 2012–15186 Filed 6–20–12; 8:45 am]

BILLING CODE 4830–01–P

DEPARTMENT OF THE TREASURY

Office of the Comptroller of the Currency

Agency Information Collection Activities: Proposed Information Collection; Comment Request

AGENCY: Office of the Comptroller of the Currency (OCC), Treasury.

ACTION: Notice and request for comment.

SUMMARY: The OCC, as part of its continuing effort to reduce paperwork and respondent burden, invites the general public and other Federal agencies to take this opportunity to comment on a continuing information collection, as required by the Paperwork Reduction Act of 1995. Currently, the OCC is soliciting comment concerning a renewal of an existing collection titled ''Customer Complaint Form.''

DATES: You should submit written comments by: August 20, 2012.

ADDRESSES: You should direct all written comments to: Communications Division, Office of the Comptroller of the Currency, Mailstop 2–3, Attention: 1557–0232, 250 E Street SW., Washington, DC 20219. In addition, comments may be sent by fax to (202) 874–5274, or by electronic mail to *regs.comments@occ.treas.gov.* You can inspect and photocopy the comments at the OCC, 250 E Street SW., Washington, DC 20219. You can make an appointment to inspect the comments by calling (202) 874–5043. For security reasons, the OCC requires that visitors make an appointment to inspect comments. You may do so by calling (202) 874–4700. Upon arrival, visitors will be required to present valid government-issued photo identification

and to submit to security screening in order to inspect and photocopy comments.

Additionally, you should send a copy of your comments to OCC Desk Officer, 1557–0232, by mail to U.S. Office of Management and Budget, 725 17th Street NW., #10235, Washington, DC 20503, or by fax to (202) 395–6974.

FOR FURTHER INFORMATION CONTACT: You can request additional information or a copy of the collection from Mary Gottlieb, (202) 874–5090, Legislative and Regulatory Activities Division (1557–0202), Office of the Comptroller of the Currency, 250 E Street SW., Washington, DC 20219.

SUPPLEMENTARY INFORMATION: On July 21, 2011, pursuant to the Dodd-Frank Wall Street Reform and Consumer Protection Act (Dodd-Frank Act),[1] the Bureau of Consumer Financial Protection (CFPB) was granted the authority to, among other things, supervise large banks and Federal savings associations with more than $10 billion in assets for compliance with certain consumer protection laws. The CFPB's authority also includes the handling of consumer complaints related to those large financial companies.

Representatives from the OCC and the CFPB as well as the other FFIEC agencies have been meeting on a regular basis since the passage of the Dodd-Frank Act to establish policies and procedures to coordinate the processing of consumer complaints.

The OCC will continue to process questions and complaints concerning consumer issues within the jurisdiction of the OCC through our Consumer Assistance Group (CAG), and will continue to send misdirected complaints it receives to the appropriate Federal or state regulator.

Title: Customer Complaint Form.

OMB Control No.: 1557–0232.

Description: The customer complaint form was developed as a courtesy for those that contact CAG at the Office of the Comptroller of the Currency, and wish to file a formal, written complaint. The form allows consumers to focus their issues and provide a complete picture of their concerns, but is entirely voluntary. It is designed to prevent having to go back to a consumer for additional information, which delays the process. Completion of the form allows CAG to process the complaint more efficiently.

CAG uses the information to create a record of the consumer's contact, including capturing information that can be used to resolve the consumer's issues and provide a database of information that is incorporated into the OCC's supervisory process.

Type of Review: Regular.

Affected Public: Businesses or other for-profit.

Number of Respondents: 40,000.

Total Annual Responses: 40,000.

Frequency of Response: On occasion.

Total Annual Burden Hours: 3,320.

Comments submitted in response to this notice will be summarized and included in the request for OMB approval. All comments will become a matter of public record.

Comments are invited on:

(a) Whether the collection of information is necessary for the proper performance of the functions of the agency, including whether the information shall have practical utility;

(b) The accuracy of the agency's estimate of the burden of the collection of information;

(c) Ways to enhance the quality, utility, and clarity of the information to be collected;

(d) Ways to minimize the burden of the collection on respondents, including through the use of automated collection techniques or other forms of information technology; and

(e) Estimates of capital or start-up costs and costs of operation, maintenance, and purchase of services to provide information.

Dated: June 15, 2012.

Michele Meyer,

Assistant Director, Legislative & Regulatory Activities Division.

[FR Doc. 2012–15231 Filed 6–20–12; 8:45 am]

BILLING CODE 4810–33–P

[1] *See,* Dodd-Frank Wall Street Reform and Consumer Protection Act, Public Law 111–203, 124 Stat. 1990, July 21, 2010 (Dodd-Frank).

FEDERAL REGISTER

Vol. 77 Thursday,

No. 120 June 21, 2012

Part II

Department of Transportation

National Highway Traffic Safety Administration

49 CFR Part 571

Federal Motor Vehicle Safety Standards; Glazing Materials; Proposed Rule

DEPARTMENT OF TRANSPORTATION

National Highway Traffic Safety Administration

49 CFR Part 571

[Docket No. NHTSA–2012–0083]

RIN 2127–AL03

Federal Motor Vehicle Safety Standards; Glazing Materials

AGENCY: National Highway Traffic Safety Administration (NHTSA), Department of Transportation (DOT).

ACTION: Notice of proposed rulemaking (NPRM).

SUMMARY: NHTSA is issuing this NPRM as part of the agency's ongoing effort to harmonize vehicle safety standards under the Economic Commission for Europe 1998 Agreement. Following a vote in favor of establishing a global technical regulation (GTR) on automotive glazing, we are initiating the process for considering adoption of the GTR. The changes proposed in this NPRM to the Federal motor vehicle safety standard on glazing materials would better harmonize U.S. regulatory requirements with those of other industrialized countries, by modernizing the test procedures for tempered glass, laminated glass, and glass-plastic glazing used in front and rear windshields and side windows.

We believe that most of the changes in this proposal would constitute minor amendments that would harmonize differing measurements and performance requirements for similar test procedures. Many of the tests in the GTR are substantially similar to tests currently included in Federal Motor Vehicle Safety Standard No. 205. We believe that the most significant improvements proposed in the GTR include an upgraded fragmentation test designed to better test the tempering of curved tempered glass, and a new procedure for testing an optical property of the windshield at the angle of installation, to better reflect real world driving conditions than the current procedure used in Standard No. 205. Comments are requested on whether these and the other provisions of the GTR are suited for adoption into the Federal glazing standard.

DATES: Comments to this proposal must be received on or before August 20, 2012.

ADDRESSES: You may submit comments, identified by the docket number in the heading of this document, by any of the following methods:

- *Federal eRulemaking Portal:* Go to *http://www.regulations.gov*. Follow the instructions for submitting comments on the electronic docket site by clicking on ''Help'' or ''FAQ.''
- *Mail:* Docket Management Facility, M–30, U.S. Department of Transportation, 1200 New Jersey Avenue SE., West Building, Ground Floor, Room W12–140, Washington, DC 20590.
- *Hand Delivery:* U.S. Department of Transportation, 1200 New Jersey Avenue SE., West Building, Ground Floor, Room W12–140, between 9 a.m. and 5 p.m. Eastern Time, Monday through Friday, except Federal holidays.
- *Fax:* 202–493–2251.

Regardless of how you submit comments, you should mention the docket number of this document.

You may call the Docket Management Facility at 202–366–9826.

Instructions: For detailed instructions on submitting comments and additional information on the rulemaking process, see the Public Participation heading of the **SUPPLEMENTARY INFORMATION** section of this document. Note that all comments received will be posted without change to *http://www.regulations.gov*, including any personal information provided.

Privacy Act: Anyone is able to search the electronic form of all comments received into any of our dockets by the name of the individual submitting the comment (or signing the comment, if submitted on behalf of an association, business, labor union, etc.). You may review DOT's complete Privacy Act Statement in the **Federal Register** published on April 11, 2000 (65 FR 19477–78) or you may visit *http://www.dot.gov/privacy.html*.

Docket: For access to the docket to read background documents or comments received, go to *http://www.regulations.gov*, or the street address listed above. Follow the online instructions for accessing the dockets.

FOR FURTHER INFORMATION CONTACT:

For technical issues: Ms. Gayle Dalrymple, Office of Rulemaking, National Highway Traffic Safety Administration, 1200 New Jersey Avenue SE., Washington, DC 20590. Email: *gayle.dalrymple@dot.gov*. Telephone: (202) 366–5559. *For legal issues:* Mr. Thomas Healy, Office of the Chief Counsel, Vehicle Safety Standards & Harmonization Division, National Highway Traffic Safety Administration, 1200 New Jersey Avenue SE., Washington, DC 20590. Email: *thomas.healy@dot.gov*. Telephone: (202) 366–7161.

SUPPLEMENTARY INFORMATION:

Table of Contents

I. Executive Summary
II. Background
1. 1998 Agreement
2. Public Participation in Development of a GTR
3. Objective of Safety Glazing GTR
4. Public Participation in Development of Glazing GTR
III. Overview of Pertinent FMVSS No. 205 Provisions
IV. Proposed Changes to FMVSS No. 205
1. Radiation (Light Stability) Test
2. Luminous Transmittance Level
3. Humidity and High Temperature Resistance Tests
4. Half Pound Ball Drop—Tempered Glass
5. Fracture Test
6. Shot Bag and Dart Drop Tests
7. Half Pound Ball Drop Test—Laminated Glass
8. Weathering Test
9. Abrasion Resistance
10. Visual Distortion
11. Chemical Resistance, Flammability and Change in Temperature Tests
12. Penetration Resistance
13. Optional Strength Test
V. Differences Between GTR and Agency Proposal
VI. Proposed Compliance Date
VII. Regulatory Notices and Analyses
VIII. Public Participation

I. Executive Summary

Performance requirements for glazing materials used in motor vehicles in the U.S. are currently governed by Federal Motor Vehicle Safety Standard (FMVSS) No. 205, *Glazing Materials* (49 CFR 571.205). FMVSS No. 205 applies to windshields, windows, and interior partitions for use in motor vehicles. FMVSS No. 205 was established in the late 1960s to ensure safe driver visibility and to reduce the likelihood of occupant ejection and injury as a result of contact with glazing materials.

The revisions to FMVSS No. 205 proposed today are part of the agency's ongoing efforts to seek to harmonize vehicle safety standards under the United Nations/Economic Commission for Europe (UN/ECE) [1] Agreement Concerning the Establishing of Global Technical Regulations for Wheeled Vehicles, Equipment and Parts Which Can Be Fitted And/or Be Used on Wheeled Vehicles (the ''1998 Agreement''), to which the U.S. is a Contracting Party.[2] In 2008, the U.S.

[1] The Economic Commission for Europe was established by the United Nations in 1947 to help rebuild post-war Europe, develop economic activity and strengthen economic relations between European countries and between European countries and the other countries of the world.

[2] The 1998 Agreement was concluded under the auspices of the United Nations and provides for the establishment of globally harmonized vehicle regulations. This Agreement, whose conclusion was spearheaded by the United States, entered into force

voted in favor of establishing the glazing GTR. Background information on the 1998 Agreement and on the development of this GTR is discussed in the next section of this preamble.

As an FMVSS, this proposal is subject to the requirements of the National Highway and Motor Vehicle Safety Act which states that NHTSA ''shall prescribe motor vehicle safety standards.'' [3] 49 U.S.C. 30111. Standards issued under the National Highway and Motor Vehicle Safety Act ''shall be practicable, meet the need for motor vehicle safety, and be stated in objective terms.'' *Id.*

NHTSA's policies in implementing the 1998 Agreement are published in 49 CFR part 553, Appendix C, ''Statement of Policy: Implementation of the United Nations/Economic Commission for Europe (UN/ECE) 1998 Agreement on Global Technical Regulations—Agency Policy Goals and Public Participation.'' NHTSA's paramount policy goal under the 1998 Agreement is to ''[c]ontinuously improve safety and seek high levels of safety, particularly by developing and adopting new global technical regulations reflecting consideration of current and anticipated technology and safety problems.'' *Id.*

We believe that the changes proposed today to FMVSS No. 205 would modernize the standard's test procedures for tempered glass, laminated glass, and glass-plastic glazing used in front and rear windshields and side windows, to better reflect real world conditions and eliminate redundant and unnecessary testing. Most of the changes in this proposal amount to minor amendments that would harmonize differing measurements and performance requirements for similar test procedures. Many of the tests in the GTR are substantially similar to tests currently included in FMVSS No. 205.

The GTR has four sets of tests and requirements for mechanical properties: a fragmentation test, a 227 gram (g) steel ball impact test, a 2.26 kilogram (kg) steel ball impact test, and a 10 kg headform impact test.[4] Each of the first three of these tests was adopted from widely used procedures currently in effect, with small differences, in all three national regulations examined for this GTR (European, Japanese, and U.S. safety regulations). Three types of optical qualities are addressed in the GTR: light transmission; optical distortion; and double imaging. The main differences between the European, Japanese, and U.S. standards and regulations examined were not the performance requirements but the test procedures. The GTR resolves those differences. The GTR also includes environmental resistance requirements related to temperature change, fire, chemical resistance, abrasion, radiation, high temperature and humidity. The first four of these were common to all the examined regulations. The remaining three requirements had minor differences, which the GTR resolves.

We believe that the most significant improvements proposed in the GTR include an upgraded fragmentation test designed to better test the tempering of curved tempered glass, and a new procedure for testing an optical property of the windshield at the angle of installation, to better reflect real world driving conditions than the procedure now used in FMVSS No. 205. We are not currently proposing to adopt the headform test because we do not believe that the headform test would provide any additional safety benefits beyond the other penetration resistance test included in the GTR.

Although most of the proposed changes are minor, we anticipate many positive effects from the GTR. As a general matter, vehicle manufacturers, and ultimately, consumers, both here and abroad, can expect to achieve cost savings through the formal harmonization of differing sets of standards when the Contracting Parties to the 1998 Agreement implement the new GTR. Formal harmonization also improves safety by assisting us in adopting best safety practices from around the world and identifying and reducing unwarranted regulatory requirements. The harmonization process also allows manufacturers to focus their compliance and safety resources on glazing regulations whose differences government experts have worked to converge as narrowly as possible. Compliance with a single standard will enhance design flexibility and allow manufacturers to design vehicles that better meet safety standards, resulting in safer vehicles. Further, we support the harmonization process because it allows the agency to leverage scarce resources by consulting with other governing bodies and international experts to share data and knowledge in developing modernized testing and performance standards that enhance safety.

We are unable to quantify the exact impacts of this proposal because we do not know how many glazing manufacturers are currently testing to multiple national glazing standards. Those currently test to multiple standards will experience a net decrease in testing costs. We estimate that those glazing manufacturers that currently only test to the requirements in FMVSS No. 205 will experience an increase in testing costs of $1,900 to $2,100. We do not believe that the economic impacts of this proposal would be greater than $0.009 to $0.01 per vehicle for a new make and model based on the possible increase in testing costs of $1,900 to $2,100 divided by an average vehicle design lifetime sales of 210,000.

II. Background

1. 1998 Agreement

On June 25, 1998, the U.S. became the first signatory to the 1998 Agreement. This agreement was negotiated under the auspices of the UN/ECE under the leadership of the U.S., the European Community (EC) and Japan. The 1998 Agreement provides for the establishment of GTRs regarding the safety, emissions, energy conservation and theft prevention of wheeled vehicles, equipment and parts. The 1998 Agreement entered into force on August 25, 2000.

By establishing GTRs under the 1998 Agreement, the Contracting Parties seek to develop harmonization in motor vehicle regulations at the regional and national levels.[5] Under the 1998 Agreement, countries voting ''yes'' on a GTR agree to begin their processes for adopting the provisions of the GTR, e.g., in the U.S., to issue an NPRM or advance NPRM. However, as to whether the GTR should ultimately be adopted, the Agreement recognizes that governments should have that authority to determine whether the GTR meets their safety needs.

The UN/ECE World Forum for Harmonization of Vehicle Regulations (WP.29) administers the 1998 Agreement. Four committees coordinate the activities of WP.29: AC.2 manages the coordination of work of WP.29, while AC.3 is the ''Executive Committee'' for the 1998 Agreement. There are also 6 permanent subsidiary bodies of WP.29, known as GRs (Groups of Rapporteurs) that assist WP.29 in researching, analyzing and developing technical regulations. One of the GRs is the ''Working Party on General Safety Provisions'' (GRSG), to which WP.29

in 2000 and is administered by the UN Economic Commission for Europe's World Forum for the Harmonization of Vehicle Regulations (WP.29).

[3] The Secretary of Transportation has delegated the authority to issue safety standards to NHTSA. 49 CFR 1.50.

[4] The 10 kg headform test is an optional requirement in the GTR. Each Contracting Party to the 1998 Agreement can decide whether to apply this provision to national/regional law.

[5] Nongovernmental organizations may also participate in a consultative capacity in WP.29 and its subsidiary bodies.

referred the glazing GTR for the preparation of technical recommendations.

2. Public Participation in Development of a GTR

NHTSA has established policies for ensuring public participation at all stages of the GTR process.[6]

Before submitting a draft proposal for a GTR to WP.29, NHTSA will publish a notice soliciting comment on the draft. If there is a proposal from a Contracting Party other than the U.S., after the proposal has been referred to a GR and has been made available in English by WP.29, NHTSA will make the draft proposal available in the DOT docket and will publish a notice requesting comment on the draft proposal. The agency will consider the comments in developing the U.S. position on the proposal.

If a GR recommends a draft GTR to the AC.3 concerning potential establishment of the GTR, NHTSA will make the recommended GTR available in the docket after it is made available by WP.29 and will request comment on the document. Before participating in a vote of the Executive Committee regarding the establishment of the GTR, NHTSA will consider the comments and develop a U.S. position on the recommended GTR.

It is important to emphasize that, in the event the U.S. votes ''yes'' for establishment of a GTR, we will seek and consider public comments on the suitability of the GTR as an FMVSS. Under the GTR process, countries voting ''yes'' on a GTR have only agreed to begin their processes for rulemaking on the GTR. Under our procedures,[7] NHTSA will publish a notice requesting public comment on adopting the regulation as a U.S. standard. Any decision by NHTSA as to whether to issue a final rule on adopting the regulation will be made in accordance with applicable U.S. law, after careful consideration of public comments.[8] NHTSA's decision as to whether to adopt a GTR as a Federal motor vehicle safety standard is governed by the procedures for informal rulemaking of the *Administrative Procedure Act,*[9] the *National Traffic and Motor Vehicle Safety Act,*[10] and NHTSA's rulemaking regulations (49 CFR Part 553, *Rulemaking Procedures*).

3. Objective of Safety Glazing GTR

In October 2002, WP.29 adopted the 1998 Global Agreement Programme of Work (agreed upon subjects for which GTRs should be developed), which included safety glazing, and created an informal working group to draft the glazing GTR under the Chairmanship of Germany. The working group consisted of automotive glazing experts from governmental administrations, technical services, glass industry and automotive organizations from different countries worldwide.

The objective of the group was to develop an internationally harmonized standard regarding the safety of glass automotive glazing materials. The group developed the GTR based on the requirements in UN/ECE Regulation No. 43, American National Standards Institute (ANSI) Standard Z26.1, and the Japanese Industrial Standard. The scope of the glazing GTR was restricted to glass safety glazing; other materials, such as plastics, were excluded from this GTR's consideration.

The GTR includes requirements and tests to ensure that the mechanical properties, optical qualities and environmental resistance of glazing are satisfactory. It does not include type approval, plastic glazing, bullet resistance glazing and installation requirements. These subjects were left to the discretion of the Contracting Parties. The informal group determined not to include installation requirements in the GTR because existing national or regional regulations or legislation covering installation requirements differ significantly. For instance, the requirements for light transmission levels in glazing installed in rearward vision areas vary widely. The informal working group suggested, and AC.3 agreed, that adding an installation requirement into the GTR should be postponed, as it would lengthen the development time for the GTR.

Marking requirements were also not included in the GTR. Existing national or regional regulations specify marking requirements that usually relate to 3 categories: (1) The type of material, (2) identification of the manufacturer, and/or (3) the regulations/legislation the glazing meets. Responding to suggestions from the informal group, AC.3 agreed that the GTR would only consider the possibility to include markings for the ''type of material'' in the GTR.[11]

4. Public Participation in Development of Glazing GTR

In October 2004, in accordance with the agency's procedures for considering GTRs,[12] NHTSA docketed the draft GTR addressing glazing proposed by Germany (Docket No. NHTSA–2003–14395) and published a notice in the **Federal Register** soliciting comment on the draft (69 FR 60460, 60462; October 8, 2004). NHTSA received no comments on the document.

On October 10, 2006, NHTSA published another notice describing the agency's work on GTR activities, including the glazing draft GTR (Docket No. NHTSA–2003–14395). In July 2007, NHTSA received comments on the draft GTR from the Society of Automotive Engineers (SAE) Glazing Committee. The SAE Glazing Committee's comment included requests for clarification of technical rationale and justification, adding definitions of key terms and clarification of testing and performance requirements. The agency made recommendations to the informal working group to implement some of the SAE comments into the GTR.

On February 11, 2008, NHTSA published a notice in the **Federal Register** informing the public that the WP.29 intended to vote on the GTR covering glazing at the March 2008 session, and soliciting comment on how the agency should vote on the proposal.[13]

The agency received six comments in response to the request for comment, from: the Alliance of Automobile Manufactures (Alliance), Volkswagen Group of America (VW), Solutia, PPG Industries (PPG), Mr. John Turnbull (former Chairman of the SAE Glazing Standards Committee), and Automotive Components Holdings (Automotive Components).

The Alliance and VW recommended that the U.S. vote in favor of the GTR at the March 2008 session, while expressing the view that WP.29 needed to initiate a GTR on issues such as marking, plastics, state-of-the-art glazing and installation requirements.

The other commenters did not support the GTR, believing, among other things, that the GTR includes provisions

[6] 49 CFR part 553, App. C (describing the agency's procedures for ensuring public participation in the GTR process).

[7] Id.

[8] The GTR process leaves it up to NHTSA to decide the appropriate next step in the rulemaking process, after receiving and considering the comments we received. NHTSA may issue a final rule adopting the regulation, a supplemental NPRM, or a notice terminating the rulemaking action. 49 CFR Part 553, App. C.

[9] 5 U.S.C. 553.

[10] 49 U.S.C. 30111 *et seq.*

[11] The European Commission later submitted a proposal concerning markings for GTRs in general, at the one-hundred-and-fortieth session of WP.29 in November 2006. As this proposal would be discussed at later sessions of WP.29, only markings concerning the type of material are included in this GTR.

[12] 49 CFR part 553, App. C.

[13] 73 FR 7803.

that were not supported by data or were unjustified from a safety standpoint, or fails to include tests now included in FMVSS No. 205 that they believe meet a safety need.

The agency considered the comments when deciding how to vote on the proposed GTR. It appeared that some of the objections were speculative or were opposed to any kind of change to the standard, while others raised points that were worthy of further discussion. After analyzing the comments, we did not believe that the commenters raised insurmountable opposition to the opportunity to modernize the glazing standard, but we did consider several of the opposing comments worthy of follow-up. We determined that the objections to the draft GTR could be aired out and resolved in the notice-and-comment process of NHTSA rulemaking. This NPRM highlights those concerns and, in turn, requests comments on those issues.

All in all, NHTSA believed the proposed GTR to be worthwhile for consideration. The agency believed the GTR presented an opportunity to take steps toward harmonization. The GTR achieves a narrowing of the convergence of disparate national standards that seek to mitigate the same motor vehicle safety problem and presents an opportunity to modernize FMVSS No. 205 in a manner consistent with harmonization. Accordingly, NHTSA voted yes on the GTR in March 2008.

Today's NPRM initiates rulemaking and requests public comment on adopting the GTR's provisions.

III. Overview of Pertinent FMVSS No. 205 Provisions

FMVSS No. 205, *Glazing materials,* specifies performance requirements and test procedures for glazing installed in motor vehicles. The standard specifies performance tests that the glazing must pass and locations in the vehicle where particular types, or ''items,'' of glazing may be installed. The standard also includes certification and marking requirements for original and replacement glazing materials used in motor vehicles.

FMVSS No. 205 incorporates by reference American National Standards Institute (ANSI) [14] Standard Z26.1, ''American National Standard for Safety Glazing Materials for Glazing Motor Vehicles and Motor Vehicle Equipment Operating on Land Highways—Safety Standard,'' ANSI/SAE Z26.1–1996 (hereinafter referred to as ''ANSI Z26.1''). ANSI Z26.1 describes 20 different ''items'' of glazing for motor vehicle use.

Each item of glazing is generally defined by its ability to pass a specified set of tests.[15] ANSI Z26.1 includes a total of 31 specific test procedures designed to assess various mechanical and optical properties and the environmental resistance of the items of glazing.[16] The set of tests that the item of glazing must pass varies from item to item, based in part on the type of vehicle, and location within that vehicle, in which the glazing will be installed. The tests are listed in a chart in ANSI Z26.1, with detailed test procedures also set forth there. The tests seek to ensure adequate safety performance of vehicle glazing for the item's application.

This NPRM pertains to the following test requirements of ANSI Z26.1, which are incorporated into FMVSS No. 205:

1. A radiation (light stability) test for laminated glass, tempered glass, and glass-plastic (for glazing installed in areas requisite for driving visibility), ensuring that the glazing retains its luminous transmittance after prolonged exposure to sunlight (ANSI Z26.1, paragraph S5.1);
2. A 70 percent luminous transmittance requirement (for glazing installed in areas requisite for driving visibility [17]) (ANSI Z26.1, paragraph S5.2);
3. Humidity and high temperature resistance tests (laminated glass and glass-faced plastics) (ANSI Z26.1, paragraphs 5.3, 5.4, 5.5), to determine if the glazing will withstand environmental effects;
4. A half-pound ball impact test (tempered glass), ensuring that the glass has a certain minimum strength to resist impact from external projectiles, such as small stones (ANSI Z26.1, paragraph S5.6);
5. A fracture test (tempered glass), to minimize the risk of injury caused by fragments of fractured glazing material (ANSI Z26.1, paragraph S5.7);
6. Shot bag and dart drop tests (tempered glass), to ensure glazing material has a certain minimum strength to resist impact of large and small objects (ANSI Z26.1, paragraphs 5.8, 5.9);
7. A half-pound ball drop test (laminated glass), to ensure the glazing resists penetration by heavy objects, such as body parts, that may come into contact with the glazing in the event of a crash (ANSI Z26.1, paragraph S5.12);
8. A weathering test (plastic and glass-plastic glazing), to ensure the plastic face mounted on the exterior of the vehicle will withstand simulated weathering over a long period of time (ANSI Z26.1, paragraph S5.16);
9. An abrasion resistance test (ANSI Z26.1, paragraph S5.17);
10. An optical distortion test (glazing materials used as windshields), ensuring safe driver visibility through the windshield (ANSI Z26.1, paragraph S5.15);
11. Chemical resistance, change in temperature, and flammability tests (ANSI Z26.1, paragraphs 5.19, 5.23, 5.24, 5.28); and,
12. A penetration resistance test (laminated glass), to assess the glazing's resistance to penetration by heavy objects, such as body parts (ANSI Z26.1, paragraph S5.26).
13. In addition, comments are requested on the GTR's optional 10 kg (22 lb) headform drop test, which is not currently included in ANSI Z26.1.

IV. Proposed Changes to FMVSS No. 205

The agency solicits comment on the following proposed changes to FMVSS No. 205's requirements. These proposals implement the GTR provisions.

As noted earlier, we believe that, for the most part, the changes proposed in the GTR do not substantially alter the current requirements of FMVSS No. 205. Many of the changes are minor amendments to bridge small differences in the current regulatory requirements of Contracting Parties. Other changes attempt to update FMVSS No. 205 to better test performance of modern glazing and to delete obsolete requirements. The proposal's new

[14] ANSI is a custodian for voluntary commercial standards developed by committees such as the Society of Automotive Engineers (SAE). The SAE Glazing Committee (made up of individuals knowledgeable in the field of automotive glazing) periodically revises the existing ANSI glazing standards.

[15] Certain items of glazing are also defined according to their construction characteristics. For example, item 1 glazing may be a multiple glazed unit, which is more than one sheet of glazing in a common mounting. Multiple glazed unit item 1 glazing needs to meet a different set of tests than glazing that is not a multiple glazed unit.

[16] On July 25, 2003, NHTSA published the current version of FMVSS No. 205 in a final rule incorporating by reference ANSI Z26.1–1996 (68 FR 43964). ANSI Z26.1–1996 is the applicable ANSI standard in FMVSS No. 205, even though the SAE Glazing Committee has published a later version of ANSI Z26.1. Since the Federal motor vehicle safety standards cannot be changed except by following the informal rulemaking procedures of the Administrative Procedure Act, revisions to the ANSI standard do not become part of FMVSS No. 205 unless we conduct a rulemaking that expressly identifies and incorporates them. NHTSA analyzes the revisions of the ANSI standard for improved safety benefits, harmonization, obsolete requirements, and any increased costs associated with compliance, and conducts a rulemaking, as appropriate, to incorporate the new version.

[17] It is NHTSA's position that, for passenger cars, all windows in the passenger compartment are requisite for driving visibility.

marking requirements for tempered glass, laminated glass and glass-plastic glass are substantially similar to the marking requirements of ANSI Z26.1.

The changes in the proposed GTR are only applicable to tempered glass, laminated glass, and glass face plastic glazing. We do not propose changing FMVSS No. 205's requirements for other glazing. ANSI Z26.1 will continue to apply, unchanged, to bullet resistant glazing and glazing for use on motorcycles, slide-in campers, and pick up covers designed to carry persons while in motion. ANSI Z26.1 will also continue to apply, unchanged, to glazing for use on trucks, buses and MPVs in locations not requisite for driving visibility.

This NPRM does not propose changes to FMVSS No. 205 requirements that specify where items may be installed. As noted above, the GTR does not contain specifications for installation of the glazing. Installation was not included because existing national or regional regulations or legislation covering installation requirements differ significantly.[18] This NPRM also does not include proposals for comprehensive marking of glazing. As explained earlier, comprehensive marking requirements were not included in the GTR.

FMVSS No. 205 is currently very brief as set forth in 49 CFR 571.205, since it incorporates by reference ANSI Z26.1. The proposed regulatory text of this NPRM would significantly lengthen 49 CFR 571.205 because the provisions of the GTR would be set forth in the regulatory text of the standard rather than being incorporated, for the most part, in a separate document (i.e., in the ANSI standard). Nonetheless, we emphasize that we believe the proposed changes are relatively minor.

The agency is considering adopting all the changes proposed in the GTR. However, after reviewing the comments to this NPRM and other relevant information, the agency may choose to incorporate some of the proposed tests in the GTR while retaining some of the current requirements of FMVSS No. 205.

The proposed regulatory text is taken almost verbatim from the GTR. Consistent with principles for Plain Language, we are amenable to suggestions as to how we can improve the regulatory text. We have noted periodically in the text where we wish to highlight a request for suggestions on improving the text.

The agency is proposing to add definitions for over thirty new terms to the definitions section of FMVSS No. 205. These new definitions would define terms used in the GTR which are used in the new regulatory language that would be added to FMVSS No. 205.

1. Radiation (Light Stability) Test

Paragraph S5.1 of ANSI Z26.1 specifies a light stability test for laminated glass, tempered glass, and glass-plastic installed in areas of a vehicle requisite for driving visibility. The purpose of the test is to ensure that the glazing retains its luminous transmittance after prolonged exposure to sunlight.

The test specimen is exposed to ultra-violet radiation for 100 hours. After being exposed to radiation, the specimen is tested for luminous transmittance. The performance requirements for the test require that the glazing retain 95 percent of its pre-exposure luminous transmittance.

For laminated glass used in windshields and glass plastic glazing, the light stability test in ANSI Z26.1 contains an extra step. After being exposed to radiation, laminated glass and glass-plastic samples are immersed in boiling water and examined for decomposition.

Proposed Change

The process used in the radiation test in the GTR, located in S6.7 of today's proposed regulatory text, is similar to the process used in the light stability test in paragraph S5.1 of ANSI Z26.1. The agency believes that the radiation test in the GTR is generally equivalent to the current light stability test in the ANSI standard. The purpose of both tests is to ensure that the glazing retains its luminous transmittance after prolonged exposure to sunlight. Both tests examine the ability of laminated glass to retain its luminous transmittance when exposed to ultraviolet (UV) radiation.

There are differences, however. Consistent with the GTR, we propose that the light stability test of FMVSS No. 205 be amended to not apply to tempered glass. The GTR informal working group suggested that this test is not needed for tempered glass because tempered glass generally does not react to UV radiation. Also, tempered glass by its nature is a stable and durable material and generally would not degrade after prolonged exposure to sunlight. NHTSA has no reason to disagree; however, the agency seeks comment on this proposal to exclude tempered glass from the resistance to UV radiation test.

Further, consistent with the GTR, we propose that laminated glass and glass plastics would not be exposed to boiling water after exposure to radiation. The GTR informal working group suggested that submerging the samples in boiling water is duplicative of the resistance to high temperature test, see below, and does not need to be included from a safety perspective. NHTSA has no reason to disagree; however, we request comments on this issue.

We note that previously, Mr. Turnbull commented[19] in opposition to the GTR's provisions on the radiation test. He stated that the method specifies the radiation source (lamp) by general dimensions but is non-specific regarding the actual amount of UV spectral radiation generated. In response, we point out that the GTR specifies that each test piece shall be exposed to the equivalent of 100 hours of ultraviolet radiation at 1,400 W/m^2. NHTSA tentatively believes that the terms of this test are specified with sufficient clarity to make the test repeatable.

In previous comments, Solutia expressed concern that, without the thermal resistance testing post irradiation, there is no assurance the glazing will maintain clarity during exposure to sun and heat. Comments are requested on this issue.

2. Luminous Transmittance Level

Paragraph S5.2 of ANSI Z26.1 requires glazing materials for use in areas of a vehicle requisite for driving visibility to undergo a test for luminous transmittance.[20] The test requires that the glazing have a luminous transmittance of not less than 70 percent. The purpose of this test is to ensure safe driver visibility. The current standard requires the entire windshield except for the shade ban area and the area where the rearview mirror or rain detector is mounted to the windshield to meet the performance requirements of this test.

Proposed Change

The GTR specifies the same 70 percent luminous transmittance level as

[18] Specifically, the requirements for light transmission levels in glazing installed in rearward vision areas vary widely. The informal working group developing the GTR decided to postpone adding the installation requirement into the GTR as it would lengthen the development time for the GTR.

[19] All comments referred to in this section were submitted to Docket NHTSA–2008–0008, responding to NHTSA's request for comments pending a vote on the draft GTR.

[20] Section 4 of ANSI Z26.1, *Application of Tests,* specifies the areas of vehicles that are required to be equipped with glazing with a 70 percent luminous transmittance level. NHTSA's position is that for passenger cars, all windows in the passenger compartment are requisite for driving visibility.

the current ANSI Z26.1 luminous transmittance test. Paragraph S5.2.1.1.1 of the proposed regulatory text applies the luminous transmittance test to all glazing requite for the driver's forward field of vision. The GTR defines the driver's forward field of vision to be the windshield and the driver and passenger side windows.

The GTR leaves the required luminous transmittance level requisite for the driver's rearward vision to the discretion of the Contracting Parties. We have decided to maintain the current 70 percent luminous transmittance level for glazing requisite for the driver's rearward field of vision for passenger cars (S5.2.1.1.2 of the proposed regulatory text). Similar to current FMVSS No. 205 requirements, glazing used on trucks, buses and multipurpose passenger vehicles (MPVs) will only be subject to the luminous transmittance test if installed as a windshield, to the immediate right and left of the driver or the rearmost window if used for driving visibility.

FMVSS No. 205 applies a 70 percent luminous level to the entire windshield, except for shade band area and the area where the rearview mirror or rain detector is mounted to the windshield at the top of the windshield. The GTR requirements for the shade band and opaque area where the rearview mirror is mounted, reflected in paragraph S6.15.3.4 of the proposed regulatory text, are similar to those of FMVSS No. 205.

However, the GTR directly allows an opaque area 25 millimeters (mm) (0.98 inch (in)) wide around the edge of the windshield to aid installation. FMVSS No. 205's text does not directly exclude any area of the windshield from the luminous transmittance test other than shade band area at the top of the windshield and the opaque area where the rear view mirror is mounted.

We do not believe the addition of an opaque area 25 millimeters (mm) (0.98 inch (in)) wide around the edge of the windshield would constitute a significant change to standard. Already, NHTSA has interpreted FMVSS No. 104, *Windshield wiping and washing systems,*[21] to allow an opaque coating around the edge of the windshield used to cover the glue that fixes the windshield in place.[22] If there is an opaque coating to cover the glue, it appears reasonable not to require that small coated area to meet light transmittance requirements since the driver cannot see the roadway through that area.[23] We tentatively conclude that the provision in the GTR that allows an opaque area 25 mm (0.98 in) wide around the edge of the windshield would make the standard clearer by specifying the area of the windshield in which an opaque coating is allowed. We seek comment on this proposed change.

3. Humidity and High Temperature Resistance Tests

A humidity test is currently included in paragraph S5.3 of ANSI Z26.1 in order to determine if laminated glass and glass faced plastics will successfully withstand the effects of moisture in the atmosphere over time. The test requires that three test specimens be kept in a closed container over water for two weeks at a temperature between 49 °C and 54 °C (120 °F and 130 °F). In order to pass the test, the samples must not exhibit any separation of materials. Small areas of separation are allowed within 6.35 mm (0.25 in) of the edge of the sample.

The current standard includes both a boil and a bake test to determine whether safety glazing can withstand exposure to high temperatures over extended periods of time. The boil test, contained in paragraph S5.4 of ANSI Z26.1, is applicable to laminated glass and glass plastics. For the boil test, three samples are placed in 66 °C (150 °F) water for three minutes and then placed in boiling water for three hours.

The bake test, contained in paragraph S5.5 of ANSAI Z26.1, applies to multiple glazed units. It requires three samples to be heated to 100 °C (212 °F) in an oven for two hours.

The performance specifications for both tests require that no bubbles or other defects develop within 13 mm (0.5 in) of the outer edge of the sample.

Proposed Change

The humidity test is substantially similar in both ANSI Z26.1, paragraph 5.3, and the GTR. ANSI Z26.1 requires that the specimens be kept in an enclosed container over water and maintained at a temperature range designed to achieve a relative humidity level of 100 percent. The GTR humidity test, reflected in S6.8 of today's proposed regulatory text, specifies a 50 °C (122 °F) temperature at which the specimens must be kept and a 95 percent relative humidity level.

The test for resistance to high temperature in the GTR, reflected in S6.6 of the proposed regulatory text, includes the procedures for both the boil and the bake tests currently included in paragraphs 5.4 and 5.5, respectively, of ANSI Z26.1. The resistance to high temperature test in the proposed GTR requires the sample to be heated to 100 °C (212 °F) but does not specify a method for achieving the required temperature. The GTR does, however, provide that laminated glass may be tested by submersing the test piece in boiling water. The agency also solicits comment on whether a measurement tolerance of ±2 °C should be added to paragraph S6.6.1.1.

Also, the procedures for the boil test in the GTR differ slightly from the requirements of paragraph S5.4 of ANSI Z26.1. The boil test in ANSI Z26.1 requires that the sample be immersed in 66 °C (150 °F) water for 3 minutes before being transferred to boiling water to minimize thermal shock while the GTR does not include this step.

For both the humidity and the high temperature resistance tests, because cutting induces stress into the glazing, the GTR allows a 25 mm (0.98 in) area at the edge of a cut piece of glazing within which conformance to the standard will not be assessed. ANSI Z26.1 allows a 6.35 mm (0.25 in) area within which conformance will not be assessed for the humidity test and a 13 mm (0.5 in) area for the high temperature resistance tests. We have no reason to believe that the GTR's larger area would result in a decrease in safety benefit with its use. However, we seek specific comment on whether the larger area is appropriate.

The agency seeks comment on the appropriateness of the proposed changes to the boil and bake tests of the GTR.

4. Half Pound Ball Drop—Tempered Glass

Paragraph 5.6 of ANSI Z26.1 requires that tempered glass undergo an impact ball test in which a steel ball weighing 227 grams (g) (8 ounces (oz)) is dropped onto the test specimen from a height of 3.1 meters (m) (10 feet (ft)). The purpose of this test is to ensure that the glass has a certain minimum strength to resist impact from external projectiles such as small stones.

Proposed Change

The procedure in the GTR for the ball drop test applicable to tempered glass

[21] 49 CFR 571.104.

[22] March 31, 2004 letter of interpretation to Alliance of Automobile Manufacturers, *http://isearch.nhtsa.gov/files/007749drn-3.html.*

[23] *See* June 9, 1987 letter of interpretation to manufacturer whose name has been kept confidential, *http://isearch.nhtsa.gov/gm/87/nht87-2.4.html* (stating that a heads-up-display located in an area of the windshield through which the driver could only see the hood was in an area not requisite for driving visibility and was thus allowable); see also November 3, 1988 letter of interpretation to Volkswagen of America, *http://isearch.nhtsa.gov/files/3136o.html* (allowing a shade ban with less than 70% luminous transmittance along the bottom edge of the windshield).

differs from the current requirements in paragraph 5.6 of ANSI Z26.1. The proposed procedure for the ball drop test, which is reflected in paragraph S6.3 of today's proposed regulatory text, would require that a 227 g (8 ounces (oz)) test ball be dropped onto the exterior face of the glazing mounted on the vehicle from a height of 2 m (6.6 ft). The ball drop test in ANSI Z26.1 uses a steel ball of approximately the same weight dropped from a height of 3.1 m (10 ft).

The drafters of the GTR believe that calculations performed by the Japanese support a finding that a drop height of 2.0 m (6.6 ft) is sufficient for testing the safety performance of tempered glazing. The calculations assumed that the typical piece of debris that came in contact with a vehicle windshield had a mass of 2 to 3 g (0.07 to 0.1 oz). Assuming, in a worst-case scenario, that the 3 g debris impacts a piece of glazing installed on a vehicle at 150 kilometers per hour (km/h) (93 miles per hour (mph)), the study found that the impact energy of the 3 g (0.1 oz) object would be equivalent to the impact energy of a 227 g (8 oz) ball dropped from a height of 1.17 m (3.8 ft).[24] We note also that tempered glass is used in side windows, so the impact velocity of small objects on tempered glass could be lower than the impact energy of debris that strikes the vehicle head on in the windshield. For these reasons, we tentatively conclude that the 2 m (6.6 ft) height would be sufficient to assess the toughness of tempered glazing when struck by a stone or other small object.

The GTR also differs from the current ball drop test specified in ANSI Z26.1 by specifying that not less than 8 of the 10 samples tested must not break or fragment. ANSI Z26.1 requires that 10 of the 12 samples must not break or crack.[25] The agency tentatively believes that the change in sample size will not significantly impact the test results.

Comments are requested on the proposed changes. We note that, in a previous comment, Mr. Turnbull objected that, ''It is not obvious that any impact studies were actually done with stones or if a 2–3 g stone does represent typical road debris.'' While no impact studies were performed, the agency believes that the calculations conducted in Japan provide a reasoned basis for selecting 2 m (6.6 ft) as an appropriate drop high to test the toughness of tempered glass. In establishing the GTR, Contracting Parties are required to reconcile conflicting performance requirements from differing regional and national standards, the agency felt the calculations from Japan adequately ensure the safety of tempered glass when tested from a drop height of 2 m (6.6 ft).

In previous comments, Solutia, PPG and others expressed a concern that the GTR specifies different requirements (e.g., drop height) based on the type of construction of the glazing, rather than on its application, and thus, commenters believed, the GTR ''discriminates against materials.'' Solutia stated that the GTR requirement for the drop height of the 227 g ball ''specifies that toughened-glass panes [for use in side windows] be tested by dropping the ball from a height of 2 meters whereas, section 6.3.3.3 [of GTR No. 6] requires laminated panes in the same application be tested by dropping the ball from a height of 9 meters. No justification is provided for this difference in ball drop heights.''

ANSI Z26.1 currently includes different drop heights for laminated and tempered glass used as panes[26] for the 227 g (8 oz) ball drop test based on differing properties of the materials. Tempered glass is designed to withstand rough treatment but it is not resistant to penetration. Laminated glass is not as tough as tempered glass and cracks more easily but is very resistant to penetration. The differing drop heights are designed to test the differing properties of these materials. The performance requirements for the 227 g (8 oz) ball drop test applicable to tempered glass specify that the test piece must not break when the ball is dropped from a height of 2 m (6.53 ft) on to the test piece. The performance requirements for the 227 g (8 oz) ball drop test applicable to laminated glass panes specify that the ball shall not pass through the test piece when the ball is dropped on to the test piece from a height of 9 m (29.53 ft). Thus, the differing drop heights for the 227 g (8 oz) ball drop test applicable to tempered glass and laminated glass panes are included in the GTR to ensure sufficient toughness of tempered glass and sufficient penetration resistance of laminated glass panes. Comments are requested on this issue.

5. Fracture Test

ANSI Z26.1 specifies a fracture test for tempered glass in paragraph S5.7. The purpose of the fracture test is to minimize the risk of injury caused by fragments of fractured glazing material. The test specimen is tested with a spring-loaded center punch or hammer. The specimen is broken at the center of the sample. The fragments of the sample are then weighed. In order to pass the test, no fragment from the fractured specimen is allowed to weigh more than 4.25 g (0.15 oz).

Proposed Changes

ANSI Z26.1 currently specifies a test procedure with only one breaking point in the center of the sample, and a maximum weight for the largest resulting fragment. The GTR fracture test adds a second fragmentation point to verify that the glass has been properly tempered.[27] We tentatively agree with this change, because if a glazing piece is significantly curved, testing for fragmentation at only the center of the sample could mask issues with the tempering process. The added fragmentation test point at the point of curvature helps to ensure that the glazing is properly tempered and breaks into a large number of small fragments.

Further, ANSI Z26.1 currently limits the weight of the largest fragment, but not its size. The GTR performance requirements set a minimum number of fragments in a five centimeter square area and limit the length and width of the largest fragment, rather than its weight. The rationale provided in the preamble to the GTR is that newer types of very thin tempered glass could produce a large fragment but have a smaller mass than would be expected with older, thicker glass.[28] Accordingly, using weight alone could permit large fragment sizes.

NHTSA agrees that it is possible that thinner tempered glass, when fractured, may produce a fragment that is large in size but relatively small in weight, and that a reasonable alternative is to limit the size of the fragment.

However, the agency seeks comment on the proposed changes. Is the second fragmentation point reasonable? Should fragments be limited by size rather than weight? We note that in a previous comment, PPG expressed the belief that the ANSI test procedure should not be changed. It stated: ''the assumption that

[24] Unpublished one-page analysis, ''Assessment of Toughened Glass Impact Test in Terms of Impact Energy of Flying Object''; Flat Glass Manufacturers Association of Japan; March 29, 2004.

[25] ANSI Z26.1 states (section 5, Test Specifications) that ''[S]ome tests are written so that occasional failure is allowed. Such tests are better adapted to indicate a satisfactory product than less severe tests allowing no failures.''

[26] Laminated glass panes refer to laminated glass installed on locations on the vehicle other than the windshield.

[27] Figure 25 of the proposed GTR specifies the second impact point for curved panes. Global technical regulation No. 6, ''Safety Glazing Materials for Motor Vehicles and Motor Vehicle Equipment'', ECE/TRANS/180/Add.6, 16 May 2008.

[28] Id., page 9.

thinner [glass] will result in the ability to have larger pieces of glass has not been demonstrated.'' Automotive Components stated that the GTR procedure is more time consuming and requires glazing manufacturers to break more glass parts, which increases cost. Comments are requested on these issues.

6. Shot Bag and Dart Drop Tests

The current standard specifies a shot bag impact test for tempered glass (ANSI Z26.1, paragraph S5.8). The purpose of the test is to determine whether the glazing material has a certain minimum strength to resist impact of large objects, such as body parts of the vehicle occupant. A 4.99 kg (11 lb) shot bag made of flexible leather is dropped on the specimen from a height of 2.44 m (8 ft) so that it strikes the center of the face of the glazing mounted on the vehicle. Of five test specimens tested, no more than one is allowed to crack or break.

Under FMVSS No. 205, laminated glass is subject to a dart impact test (ANSI Z26.1, paragraph S5.9). The purpose of the test is to ensure the strength of the glazing when impacted by small hard objects. During the test, a 198 g (7 oz) steel dart is dropped from a height of 9.14 m (30 ft) so that it strikes the specimen in the center of the exterior face of the glazing mounted on the vehicle. The performance requirements permit the dart to puncture the specimen, but the dart is not permitted to create a hole in the specimen sufficiently large to allow the dart to pass completely through.

Proposed Change

We propose deleting the dart impact test and the shot bag test from FMVSS No. 205. It appears the tests have become obsolete. The dart impact test and the shot bag test are not included in the GTR. Both tests are not included in the most recent draft version of ANSI Z26.1 being developed by the SAE Glazing Committee.

The dart drop test, currently found in the current version of ANSI Z26.1 reflected in FMVSS No. 205, paragraph S5.9, uses a dart one ounce lighter than the 227g (8 oz) ball dropped from the same height. The agency tentatively concludes that no purpose is served by having both a dart test and a small ball test. It appears that the ball is more representative of the real world hazards encountered by vehicle glazing, and the GTR informal group suggested that the small ball test is slightly more severe. Therefore, the agency tentatively concludes that the GTR, as written without these tests, meets the need for safety.

The purpose of the shot bag test is to assess the strength of the glazing under impact from the interior side by an occupant body part. The drafters of the GTR believed that leather comprising the shot bag could not be specified to a degree of accuracy that would ensure that the results of the test were objective and repeatable. The drafters believed that the variations in the suppleness of the leather played a significant role in the distribution of force in the impact area which affects the glazing's ability to withstand the force applied by the bag. Further, the GTR committee stated that experience has shown that glazing that passes the shot bag test can sometimes fail the 2.26kg-ball drop test, but the reverse has never been seen. This experience indicates that the shot bag test is not needed to test the resistance of glazing to penetration by large heavy objects. The agency tentatively agrees with the drafters of the GTR that the variations in test conditions caused by the leather on the shot bag can introduce repeatability issues. The agency has also tentatively concluded that the shot bag test duplicates properties of the glazing tested by the 2.226 kg (5 lb) ball drop test included in the GTR.

The agency is soliciting comment on whether the dart drop and the shot bag tests should be removed from FMVSS No. 205.

7. Half Pound Ball Drop Test—Laminated Glass

ANSI Z26.1 specifies an impact ball test in paragraph S5.12 for laminated glass used in windshields. It differs from the impact ball test used on tempered glass. Laminated glass is subjected to an impact ball test in which a 227 g (8 oz) ball is dropped from a height of 9.14 m (30 ft) so that it strikes the specimen in the center of the exterior face of the glazing mounted on the vehicle. The purpose of the test is to determine whether the glazing possesses a certain minimum strength, and to ensure that the glazing is properly constructed. Separation of glass and plastic from the area of the specimen opposite the point of immediate impact of the glass shall not exceed 645 mm^2 and total separation of glass from strengthening material shall not exceed 1935 mm^2.

Proposed Change

The GTR (as reflected in paragraph S6.3 of today's proposed regulatory text) changes the drop height for the 227 g (8 oz) ball drop test applicable to laminated glass from 9.14 m (30 ft), as currently specified in ANSI Z26.1 paragraph S5.12, to 9 m (29.5 ft). The agency does not believe that this change will have any significant impact on the results produced by the test.

However, the GTR differs from ANSI Z26.1 in some respects. The GTR specifies that the 227 g (8 oz) ball drop test is conducted on specimens conditioned at two different temperatures. Ten specimens are tested at a temperature of +40 °C (104 °F) and 10 specimens are tested at −20 °C (−4 °F). At least 8 specimens from each test group must satisfy the proposed performance requirements. ANSI Z26.1 currently requires that 12 specimens be tested, that at least 10 of the 12 specimens must not crack into 2 or more pieces, and that at least 8 of the 12 prevent the ball from passing through the specimen.

The GTR also differs from ANSI Z26.1 in the manner in which the two standards measure separation of the glass from the interlay. For windshields, the GTR specifies the maximum weight for fragments that have separated from the sample, while ANSI Z26.1 specifies an area in which separation of the glass from the interlay is allowed to occur. Both standards measure separation of laminated glass used in other locations in the vehicle by specifying the area in which separation from the sample may occur. NHTSA tentatively believes that this change will not impact the ability of glazing to satisfy the test.

The agency seeks comment on the proposed changes. As noted in the discussion of issue number 4, above, Solutia and PPG were concerned why the GTR specifies a drop height of 9 m for the 227 g (8 oz) ball for laminated glass when it specifies a drop height of 2 m for tempered glazing. In addition, in a previous comment, Solutia stated that the reasons for the change in the size of the samples that must pass the tests was not explained in the GTR.

8. Weathering Test

Paragraph S5.16 of ANSI Z26.1 requires a weathering test for plastic and glass-plastic glazing for which the plastic face will be mounted on the exterior of the vehicle. The test specimen is exposed to UV radiation and water and then subjected to an abrasion wheel for 100 cycles. The purpose of the test is to determine whether the plastic glazing or glass-plastic glazing will withstand weathering over a long period of time.

Proposed Change

The GTR only applies to glass plastics for which the plastic face is mounted on the interior of the vehicle. Thus, there is no weathering test for glass plastic

glazing with the plastic face on the exterior of the vehicle.

ANSI Z26.1 paragraph S5.16 applies the weathering test to glass plastic glazing with the plastic face mounted on the exterior of the vehicle and to plastic glazing. The agency is soliciting comment on these changes.

9. Abrasion Resistance

Paragraph S5.17 of ANSI Z26.1 currently includes an abrasion resistance test where the sample is abraded with an abrading wheel. Plastic samples are abraded for 100 cycles and glass samples are abraded for 1000 cycles. After the samples are abraded they are tested for luminous transmittance. For plastic samples, the average light scatter of three samples tested cannot exceed 15 percent. Glass-faced plastic shall not have an average light scatter greater than 4 percent for the plastic face mounted on the interior of the vehicle. Glass must not have a light scatter of more than 2 percent after being abraded.

Proposed Change

The abrasion resistance test in the GTR, reflected in paragraph S6.5 of today's proposed regulatory text, is substantially similar to the current test in ANSI paragraph 5.18. The GTR specifies the same light scatter performance requirements as FMVSS No. 205. However, the GTR test specifies a different abrasion wheel than the one currently used in ANSI Z26.1. The agency believes that given the specifications of the abrasion resistance wheel specified in the GTR there is potential for the new abrasion resistance test to be more severe.

Solutia stated in a previous comment that the dimensions for the abrasion resistance wheel were outdated. The abrasion resistance wheel described in the GTR is the same as the wheel described in ISO Standard 3537, *Road vehicles—Safety glazing materials—Mechanical tests,* March 1999, which is commercially available.

In previous comments, Solutia and PPG expressed concern that the GTR specifies different test methodologies and performance levels depending on the glazing material. The commenter believed that the GTR should require the same level of safety performance for a vehicle glazing location. Solutia said that the GTR requires glass surfaces to be tested with 1,000 abrasion cycles and allows a maximum haze of 2 percent, whereas plastic surfaces are tested for only 100 abrasion cycles and allowed a maximum haze of 4 percent. Solutia stated: ''If the in-situ performance requires an environmental duty equivalent of 1,000 abrasion cycles, then that level of testing should be required for all glazing materials. Moreover, if glazing optical performance should not exceed 2% haze, then that level of performance should be required for all constructed glazing materials.''

NHTSA notes that FMVSS No. 205 currently specifies differing performance requirements for glass and plastic glazing under the abrasion resistance test. The agency believes that different performance requirements can be reasonably based on different attributes for glass and glass faced plastic and the different uses for each application. Glass, because of its chemical composition, possesses a greater resistance to chemical and environmental erosion than plastic, so glass is subject to more abrasion cycles than plastic to evaluate its abrasion resistance.

The different performance requirements for glass and glass faced plastic are also based on the differing locations on the vehicle in which each type of glazing is installed. Glass surfaces which are mounted facing the exterior of the vehicle are exposed to the outside environmental and require constant cleaning to remove dirt and grime. A 2 percent haze requirement for glass surfaces is necessary to ensure that glazing remains sufficiently transparent to provide visibility. Plastic surfaces, mounted on the interior of the vehicle, are not subjected to the same conditions, for the interior of the vehicle a 4 percent haze requirement is sufficient to ensure that glazing remains transparent. Different performance requirements are developed for different materials not out of a desire to favor certain glazing materials but rather to ensure that glazing materials possess adequate mechanical strength for their intended use in a motor vehicle.

Comments are requested on these issues, including the issue of the GTR requiring a maximum haze of 2 percent for glass and 4 percent for plastics.

10. Visual Distortion

Paragraph S5.15 of ANSI Z26.1 requires glazing materials used as windshields to undergo visual distortion and optical distortion tests. The purpose of these tests is to ensure safe driver visibility. To conduct the visual distortion test, the sample is placed in front of a light source and a circle is projected through the test specimen onto a screen. The tester then records the separation between the primary and secondary image. The separation of the secondary and primary image is not allowed to exceed 3.95 minutes of arc or 8.9 mm (0.35 in).

The procedure for the optical distortion test specifies that the sample be placed 7.62 m (25 ft) from a light source and moved toward the light source and away from the screen positioned behind the specimen at 127 mm (5 in) intervals. Each time the sample is moved, the tester observes the showdown pattern on the screen. The performance requirements of the test require that no light and dark patches representing a secondary image appear on the screen before the sample has been moved 635 mm (25 in) toward the light source. The test procedure requires that the sample be keep parallel to the screen at a right angle to the light source.

Proposed Change

The GTR visual distortion test, reflected in paragraph S6.11 of today's proposed regulatory text, is conducted at the angle of installation rather than at a perpendicular angle. The latter is currently used in paragraph 5.15 of ANSI Z26.1. Since distortion is a function of the angle of incidence, the agency tentatively believes that testing at the angle at which the glazing will be installed is a more accurate representation of real world driving conditions.

We note that the curvature of modern windshields at the margins makes it impractical to test the entire windshield for optical distortion at the angle of installation. The GTR specifies three vision measurement areas, reflected in S6.15 of today's proposed regulatory text, on which the optical distortion test is performed, which are designed to capture the area of the windshield used by the driver to see the forward roadway. The vision measurement areas used in the GTR are based on SAE J941, *Motor Vehicles Drivers Eye Locations,* JAN 2008.

SAE J941 defines a range of eye positions developed from a statistical analysis of 2,300 drivers' physiological data (with a male-to-female ratio of one-to-one) performing a straight ahead driving task.[29] Elliptical contours defining a range of eye positions were developed from a statistical analysis of this physiological data. These contours, or eye ellipses, offer a representation of a driver's eye location and can be used to determine what a driver could see in the straight ahead driving task.

The optical distortion test in the proposed GTR applies different vision testing areas to differing classes of vehicles. These vision testing areas are referred to in the GTR as Zones A, B and

[29] SAE Paper 650464, *Automobile Driver Eye Positions,* Meldrum, James F., February 1, 1965.

I. The defined vision testing areas Zones A and B apply to vehicles with a gross vehicle weight rating (GVWR) of 4,536 kg (10,000 lb) and less also referred to as light vehicles. Zone I applies to vehicles with a GVWR over 4,536 kg (10,000 lb).

Zone A is defined as the area on the outer surface of the windscreen bounded by four planes. The first plane is parallel to the Y axis passing through V_1 and inclined upwards at 3° from the X axis (plane 1 in Figure 18). The second is a plane parallel to the Y axis passing through V_2 and inclined downwards at 1° from the X axis (plane 2 in Figure 18). The third plane is a vertical plane passing through V_1 and V_2 and inclined at 13° to the left of the axis (plane 3 in Figure 18). The fourth plane is a vertical plane passing through V_1 and V_2 and inclined at 20° to the right of the X axis (plane 4 in Figure 18). The four planes correspond to an area forming a box directly in front on the driver's forward eye position.[30]

In order to determine the extended Zone A, the part of the windshield subject to the optical distortion test, the box formed by the four planes is extended to the vehicle's center line and then to the area of windshield symmetric to Zone A on the opposite side of the vehicle's centerline. The extended Zone A represents an area of the windshield extending horizontally across the center of the windshield. The area of the windshield that comprises extended Zone A must exhibit a maximum of 2 degrees of arc when subjected to the optical distortion test.

Reduced Zone B consists of area along the bottom third of the windshield bounded by extended Zone A on the top, plane 9 (in figure 19(a)) on the bottom and plane 3 (in figure 19(a)) and a plane symmetrical to plane 3 on the opposite side of the vehicle centerline on the sides as well as the areas in the upper corners of the windshield separated from each other by the opaque area where the rear view mirror is mounted. The area of the windshield that comprises reduced Zone B must exhibit a maximum of 6 degrees of arc when subjected to the optical distortion test.

Zone I, the defined vision testing applicable to vehicles with a GVWR over 4,536 kg (10,000 lb), is determined from the ''O'' point which represents the driver's eye location. The ''O'' point is a point 625 mm above the R point which is determined using the three dimensional vehicle reference system described in ISO Standard 6549, *Road Vehicles—Procedure for H- and R-point determination,* December 16, 1999. Zone I is comprised of the area of the windshield bounded on the sides by vertical planes extending 15 degrees from the right and left of the O point and on the top by a horizontal plane extending from the O point to 10 degrees above horizontal and on the bottom by a horizontal plan extending from the O point to 8 degrees below horizontal. The area of the windshield comprising Zone I must exhibit no more than 2 degrees of arc when subjected to the optical distortion test.

We tentatively believe that testing only in these areas sufficiently assesses the windshield's optical properties, given that the eye ellipses appear to offer a good estimate of the windshield area typically used by the driver and taking into account practicality considerations. The performance requirements for Zones A and I are more stringent than Zone B because Zones A and I represent the area of the windshield used most by the driver to observe the forward roadway. Zone B is also the area of the windshield closer to the edge where the windshield displays greater curvature. Given that the agency is testing the windshield at the angle of installation rather than at a perpendicular angle, we have tentatively concluded that allowing a maximum of 6 degrees of arc in the reduced Zone B at the margins of the windshield is a reasonable approach to ensuring safe visibility through the windshield. We believe that other than specifying an area of the windshield to be tested, the procedure and performance requirements for these tests are equivalent with those currently included in FMVSS No. 205.

The secondary image test in paragraph S6.12 of today's proposed regulatory text specifies two test procedures, only one of which the glazing must meet to satisfy the test's requirements. The first test measures secondary image separation by projecting the image of a target through the windshield being tested and recording the secondary image shift of the target. Other than only applying this test to the defined vision testing areas described above, we believe that this procedure is substantially the same as the procedure specified for testing secondary image separation in paragraph 5.15.2.1 of ANSI Z26.1.

The other is a collimation-telescope test. When a test piece exhibiting a secondary image is placed between the collimator and the telescope, a secondary image will appear on the polar co-ordinate system. The secondary image separation of the test piece can be determined by measuring the distance of the secondary image from the center of the polar co-ordinate system. This procedure differs from the procedure in ANSI Z26.1 where an image is projected through the test piece and secondary image separation is determined by visual inspection.

The agency solicits comment on these proposed changes. We note that in its previous comment, Solutia expressed concern that the GTR's method of testing the windshield using the installation angle ''does not provide for testing the optics for a driver looking down or to the sides. A fixed angular test methodology can appropriately represent skewed driver vision (down or to the sides) for all vehicles, and reduces the test burden and ultimately costs for manufacturers.''

11. Chemical Resistance, Flammability and Change in Temperature Tests

The current chemical resistance test, contained in paragraph S5.19 of ANSI Z26.1, is designed to ensure plastics have a minimum resistance to common chemicals that are likely to be used for cleaning purposes in motor vehicle service. The glazing is submerged in the test chemical for one minute and then examined for tacking, crazing[31] and loss of transparency.

ANSI Z.26.1 currently specifies two flammability tests, one for glazing materials 1.27 mm (0.05 in) or less in thickness and one for glazing materials thicker than 1.27 mm (0.05 in). The purpose of the tests is to determine the burn rate of safety glazing. The test is applicable to plastic glazing and the interior face of glass-plastic glazing.

Paragraph 5.23.2 of ANSI Z26.1, applicable to thin glazing materials, specifies that the sample be placed in a heat shield with a viewing window. The test is conducted by pouring a drop of toluene[32] on the surface of the specimen. The toluene is then lit and the burn area of the specimen is noted to determine compliance with the test.

Paragraph 5.24.2 of ANSI Z26.1 sets forth the flammability test applicable to thicker glazing materials. The test requires the specimen to be clamped over a Bunsen burner that is then lit for 30 seconds. If the specimen does not continue to burn at the end of the first ignition, the specimen is then lit for an additional 30 seconds. The performance specifications require that the burn rate of the specimen not exceed 1.48 millimeter per second (mm/s) (3.5

[30] Zone or test area A is depicted in Figure 18 in the regulatory text.

[31] Crazing refers to the condition in which the surface of the glazing exhibits a mesh of fine cracks.

[32] Toluene is an aromatic hydrocarbon that is sometimes used as an additive to boost the octane level in gasoline.

inches per minute (in/m)). The specimen is deemed to have passed if the burn area of the specimen does not exceed 102 mm (4 in) in length after the second ignition.

Paragraph 5.28 of ANSI Z26.1 contains a resistance to temperature change test. The purpose of the test is to verify that plastic and glass plastic glazing is capable of withstanding changes in temperature without deterioration. Two samples are subjected to a temperature of −45 °C to −35 °C (−49 °F to −31 °F) for six hours. After being conditioned to an equilibrium temperature for one hour, the samples are subjected to a temperature of 70 °C to 74 °C (158 °F to 166 °F) for three hours. After completion of the test, the samples are examined for evidence of cracking, clouding, delaminating or other deterioration.

Proposed Change

The GTR specifies chemical resistance, flammability, and change in temperature tests for glass-plastic glazing. We believe that the chemical resistance test of the GTR, reflected in paragraph S6.14 of today's proposed regulatory text, and the change in temperature test reflected in paragraph S6.9 are substantially the same as those in the currently applicable version of ANSI Z26.1.

The flammability test reflected in paragraph S6.13 of today's proposed regulatory text is similar to the test for thick glazing specified in paragraph 5.24 of ANSI Z26.1. The GTR does not specify different test procedures for different thicknesses of glazing, but does specify differing burn rates for glazing materials based on their thicknesses. The flammability test in the GTR reduces the burn time of the sample from thirty to fifteen seconds. Furthermore, the GTR does not require a second ignition if the specimen does not continue to burn after the flame source is extinguished.

Under the GTR procedures proposed today for adoption into FMVSS No. 205, a combustion chamber is used to conduct the burn test. Under the proposed test, the sample is inserted into the combustion chamber, in which the flame is already burning. This procedure differs from the current requirements of paragraph 5.24 of ANSI Z26.1 where the sample is clamped above an unlit Bunsen burn which is later lit to begin the test.

The agency seeks comment on the proposed changes, including the proposed use of a combustion chamber. In its previous comment, Solutia expressed concern that the GTR compromising safety by specifying that gas flow is cut off after 15 seconds instead of after 30 seconds, as in the current FMVSS No. 205 test. Mr. Turnbull believed that the GTR test was unnecessarily complex and outdated. We note that the specifications for the combustion chamber are very detailed and request comment on the appropriateness of the high degree of specificity in FMVSS No. 205.

12. Penetration Resistance

Paragraph 5.26 of ANSI Z26.1 specifies a penetration resistance test for laminated glass to assess the glazing's resistance to penetration by heavy objects, such as body parts, that may come into contact with the glazing in the event of a crash. During the test, a 2.268 kilogram (kg) (5 lb) steel ball is dropped from a height of 3.66 m (12 ft) so that it strikes the center of the interior surface of the glazing material mounted on the vehicle. The test sample is allowed to crack and the reinforced interlayer is allowed to tear but ten of the twelve samples tested must prevent the ball from passing through the sample.

Proposed Change

We believe that the penetration resistance test is essentially the same in paragraph S5.26 of ANSI Z26.1 and in the GTR, reflected in paragraph S6.4 of today's proposed regulatory text. ANSI Z26.1 tests penetration resistance using a 2.27 kg (5 lb) steel ball dropped from a height of 3.7 m (12 ft) whereas the GTR test uses a 2.26 kg (5 lb) steel ball dropped from a height of 4 m (13.12 ft). The performance requirements for each test slightly differ. Under the current FMVSS No. 205 requirement, 8 of 10 test samples are required to pass the test, while the GTR would require 11 of 12 samples to pass the test.

Comments are requested on these changes. The agency does not believe that these differences will impact the severity of the test or have an impact on the safety performance of the glazing. Yet, in his previous comment, Mr. Turnbull expressed concern that subtle changes may have implications that should be studied. He stated that because of its brittle nature, glass is known to have some degree of uncertainty in fracture behavior. He stated that to reliably and predictably meet the current FMVSS No. 205 requirement, a Mean Support Height (MSH) of about 15 ft is required. The commenter was concerned that to meet an increase in drop height and the new 11/12 (92 percent) support criteria, an increase in MSH may be required, which would be met ''through changes in glass or interlayer type or thickness.'' Comments are requested on the cost impacts of meeting the proposed requirements; please provide data to support your comments.

13. Optional Strength Test

The GTR also includes an optional strength test which uses a 10 kg (22 lb) spherical or semi-spherical wooden headform dropped from a height of 1.5 m (4.92 ft). This test is optional at the discretion of the Contracting Party. The test is based on a test required by Regulation 43 of the Economic Commission for Europe (UNECE R43) and the Japanese glazing standard. The primary purpose of the test is to judge penetration resistance. The test is currently not included in FMVSS No. 205.

We have tentatively determined that the headform test is not needed in FMVSS No. 205. Penetration resistance would be assessed in today's proposal by the 2.26 kg (5 lb) ball drop test; there is no test similar to the headform drop in our current FMVSS No. 205. We do not believe that the headform test would provide any additional safety benefits beyond the 2.26 kg (5 lb) ball drop penetration test.

We seek comment on our tentative decision that the headform test is not needed in the proposed revisions to FMVSS 205. In its previous comment, PPG was critical of the agency's supporting not including the headform test as a mandatory test under the GTR. PPG disagreed with the agency's statement that the headform test duplicated other tests in the GTR, stating that the headform test is a test of occupant egress while the other tests in the GTR assess the glazing's resistance to penetration from the exterior of the vehicle. In response, both the headform test and the 2.26 kg (5 lb) ball drop test assess the windshield's resistance to penetration on the face of the windshield mounted on the interior of the passenger compartment. Thus, both tests appear to measure the glazing's resistance to occupant egress. For this reason, the agency tentatively believes that the headform test would be redundant and would not offer any additional safety benefit.

V. Differences Between GTR and Agency Proposal

There are some minor differences in the agency's proposal and the text of the GTR as approved by the Contracting Parties. Some of these changes are necessary to simplify the regulation and to enhance the GTR's suitability as a self certification standard as opposed to a type approval standard. In amending the

text of the GTR, the agency has endeavored to retain all test procedures and performance requirements as they appeared in the document approved by the Contracting Parties.

The GTR contains definitions of the H-point and seating reference point. The terms H-point and seating reference point are currently defined in 49 CFR 571.3. The agency seeks comment on the appropriateness of retaining the definitions for these terms in 49 CFR 571.3 in order to maintain consistence of definitions throughout the FMVSSs.

Both the abrasion resistance test in paragraph S6.5 and the luminous transmittance test in paragraph S6.11 utilize the same light source to project light through the test pieces. The text of the GTR as approved by the Contracting Parties described the specifications for the light source twice, once in test procedure for the abrasion resistance test and once in the test procedure for the luminous transmittance test. The agency proposal only specifies the light source once in paragraph S6.5.1.3 and then the test procedure for the luminous transmittance test references this paragraph. The agency seeks comment on the appropriateness of this change.

The abrasion resistance wheel described in paragraph S6.5, is the same as the wheel specified in ISO Standard 3537, *Road vehicles—Safety glazing materials—Mechanical tests,* March 1999. The agency is considering removing the description of the abrasion resistance wheel in paragraph S6.5 and simply incorporating the description of the wheel in ISO 3537 by reference. They agency seeks comment on the appropriateness of this change.

The agency has made several changes to the fire resistance test specified in paragraph S6.13 of the agency proposal (paragraph 6.14 of GTR No. 6) to remove specifications for equipment that the agency believes does not impact the results of the test. The agency has removed the specifications for the drip pan and support stand for the combustion chamber specified in paragraph 6.14.1.1.5 of GTR No. 6. The agency has removed the specification for the metal comb in paragraph 6.14.1.5 of GTR No. 6 because the agency does not believe that this piece of equipment is necessary for testing glazing's resistance to fire. The agency has also removed the specification for a stop watch because we do not believe that it is necessary to describe this piece of equipment on the regulatory text.

The agency had also modified the test procedure contained in the agency proposal to remove steps in the procedure that we did not believe were needed to test the properties of the glazing to which the fire resistance test would be applied. The agency proposal does not include the conditioning specification contained in GTR No. 6 paragraph 6.14.2.1 because a conditioning period ranging from 24 hours to 7 days did not seem necessary to test glazing's resistance to flammability.

The agency proposal does not include paragraph 6.14.2.2 of GTR No. 6 because glazing possess a smooth face and the agency does not believe that it is necessary to condition glazing to remove napping or tufting.

The agency seeks comment on its decision to remove these paragraphs of the GTR from the agency's proposal. The agency solicits comment on whether additional paragraphs should be removed from S6.13 or any of the other test requirements contained in the proposal.

VI. Proposed Compliance Date

NHTSA proposes a compliance date of one year after publication of a final rule for the changes proposed in this NPRM. The agency believes that one year is a sufficient timeframe for manufacturers of automotive safety glazing to begin complying with the amended requirements. Substantial similarities between the provisions of the proposed rule and the current standard should enable glazing manufacturers to readily comply with the proposed rule's requirements. Comments are requested on the compliance date and on whether optional early compliance should be permitted.

VII. Regulatory Notices and Analyses

Executive Order (E.O.) 12866 (Regulatory Planning and Review), E.O. 13563, and DOT Regulatory Policies and Procedures

The agency has considered the impact of this rulemaking action under E.O. 12866, E.O. 13563, and the Department of Transportation's regulatory policies and procedures. This rulemaking was not reviewed by the Office of Management and Budget under E.O. 12866, ''Regulatory Planning and Review.'' The rulemaking action has also been determined to be not significant under the Department's regulatory policies and procedures. (44 FR 11034; February 26, 1979).

Today's NPRM proposes to harmonize FMVSS No. 205 with glazing requirements of other industrialized countries, by modernizing the test procedures for tempered glass, laminated glass, and glass-plastic glazing used in front and rear windshields and side windows. Most of the changes in this proposal would be minor amendments that harmonize differing measurements and performance requirements for similar test procedures. Many of the tests in the GTR are substantially similar to tests currently included in FMVSS No. 205. We believe that the most significant proposals in the GTR include an improved fragmentation test designed to test the tempering of curved tempered glass, and a new procedure for testing optical properties of the windshield at the angle of installation to better reflect real world driving conditions.

The agency concludes that the impacts of the proposed changes are so minimal that preparation of a full regulatory evaluation is not required. The testing costs for the GTR are expected to be similar to the testing costs for ECE Regulation 43, *Safety Glazing Materials.* The cost of testing a windshield (laminated glass) to ANSI Z26.1 is estimated to be between $800 and $1,000 and the cost of testing a windshield to ECE Regulation 43 is estimated to be around $2,500. The testing cost for side windows (tempered glass) is estimated to be $400 more for ECE Regulation 43 than for ANSI Z26.1. Those manufacturers only testing to ANSI Z26.1 would experience increased testing costs of between $1,900 and $2,100. Those manufacturers currently testing to both standards would experience a net savings. Because we do not know how many manufacturers are testing to multiple glazing standards, we cannot directly estimate the overall economic impact of the proposal. However, we do not believe that the economic impacts of this proposal would be greater than $0.009 to $0.01 per vehicle for a new make and model based on the possible increase in testing costs of $1,900 to $2,100 divided by an average vehicle design lifetime sales of 210,000.

With regard to benefits, the agency cannot quantify the safety benefits resulting from this rulemaking. However, the agency anticipates that, by formally harmonizing standards with other countries, this proposal would reduce compliance costs worldwide because manufacturers will not have to certify compliance to as many different tests for different markets. In addition, formal harmonization also improves safety by assisting us in adopting best safety practices from around the world and, identifying and reducing unwarranted regulatory requirements. The harmonization process also allows manufacturers to focus their compliance and safety resources on glazing regulations whose differences

government experts have worked to converge as narrowly as possible. Compliance with a single standard will enhance design flexibility and allow manufacturers to design vehicles that better meet safety standards, resulting in safer vehicles.

National Environmental Policy Act

We have reviewed this proposal for the purposes of the National Environmental Policy Act and determined that it would not have a significant impact on the quality of the human environment.

Regulatory Flexibility Act

Pursuant to the Regulatory Flexibility Act (5 U.S.C. 601 *et seq.,* as amended by the Small Business Regulatory Enforcement Fairness Act (SBREFA) of 1996), whenever an agency is required to publish a notice of rulemaking for any proposed or final rule, it must prepare and make available for public comment a regulatory flexibility analysis that describes the effect of the rule on small entities (*i.e.,* small businesses, small organizations, and small governmental jurisdictions). The Small Business Administration's regulations at 13 CFR part 121 define a small business, in part, as a business entity ''which operates primarily within the United States.'' 13 CFR 121.105(a). No regulatory flexibility analysis is required if the head of an agency certifies the rule will not have a significant economic impact on a substantial number of small entities.

NHTSA has considered the effects of this NPRM under the Regulatory Flexibility Act. Since this proposal is not anticipated to have a significant economic impact on any entities, I certify that this NPRM will not have a significant economic impact on a substantial number of small entities. Today's NPRM proposes to harmonize FMVSS No. 205 with glazing requirements of other industrialized countries, by modernizing the test procedures for tempered glass, laminated glass, and glass-plastic glazing used in front and rear windshields and side windows. Most of the changes in this proposal would be minor amendments that would harmonize differing measurements and performance requirements for similar test procedures. Many of the tests in the GTR are substantially similar to tests currently included in FMVSS No. 205. The agency anticipates a minimal cost difference between our current requirements and the cost of compliance to the standard proposed in this NPRM.

The agency anticipates that this proposal would reduce compliance costs because manufacturers will not have to certify compliance to as many different tests for different markets.

Small organizations and small government units would not be significantly affected since this proposed action would not affect the price of glazing or motor vehicles.

Executive Order 13132 (Federalism)

NHTSA has examined today's proposed rule pursuant to Executive Order 13132 (64 FR 43255, August 10, 1999) and concluded that no additional consultation with States, local governments or their representatives is mandated beyond the rulemaking process. The agency has concluded that the rulemaking would not have sufficient federalism implications to warrant consultation with State and local officials or the preparation of a federalism summary impact statement. The proposed rule would not have ''substantial direct effects on the States, on the relationship between the national government and the States, or on the distribution of power and responsibilities among the various levels of government.''

NHTSA rules can preempt in two ways. First, the National Traffic and Motor Vehicle Safety Act contains an express preemption provision: When a motor vehicle safety standard is in effect under this chapter, a State or a political subdivision of a State may prescribe or continue in effect a standard applicable to the same aspect of performance of a motor vehicle or motor vehicle equipment only if the standard is identical to the standard prescribed under this chapter. 49 U.S.C. 30103(b)(1). It is this statutory command by Congress that preempts any non-identical State legislative and administrative law addressing the same aspect of performance.

The express preemption provision described above is subject to a savings clause under which ''[c]ompliance with a motor vehicle safety standard prescribed under this chapter does not exempt a person from liability at common law.'' 49 U.S.C. 30103(e) Pursuant to this provision, State common law tort causes of action against motor vehicle manufacturers that might otherwise be preempted by the express preemption provision are generally preserved. However, the Supreme Court has recognized the possibility, in some instances, of implied preemption of such State common law tort causes of action by virtue of NHTSA's rules, even if not expressly preempted. This second way that NHTSA rules can preempt is dependent upon there being an actual conflict between an FMVSS and the higher standard that would effectively be imposed on motor vehicle manufacturers if someone obtained a State common law tort judgment against the manufacturer, notwithstanding the manufacturer's compliance with the NHTSA standard. Because most NHTSA standards established by an FMVSS are minimum standards, a State common law tort cause of action that seeks to impose a higher standard on motor vehicle manufacturers will generally not be preempted. However, if and when such a conflict does exist—for example, when the standard at issue is both a minimum and a maximum standard—the State common law tort cause of action is impliedly preempted. See Geier v. American Honda Motor Co., 529 U.S. 861 (2000).

Pursuant to Executive Order 13132 and 12988, NHTSA has considered whether this proposed rule could or should preempt State common law causes of action. The agency's ability to announce its conclusion regarding the preemptive effect of one of its rules reduces the likelihood that preemption will be an issue in any subsequent tort litigation.

To this end, the agency has examined the nature (e.g., the language and structure of the regulatory text) and objectives of today's proposed rule and finds that this proposed rule, like many NHTSA rules, would prescribe only a minimum safety standard. As such, NHTSA does not intend that this proposed rule would preempt state tort law that would effectively impose a higher standard on motor vehicle manufacturers than that established by today's proposed rule. Establishment of a higher standard by means of State tort law would not conflict with the minimum standard proposed here. Without any conflict, there could not be any implied preemption of a State common law tort cause of action.

Executive Order 12988 (Civil Justice Reform)

With respect to the review of the promulgation of a new regulation, section 3(b) of Executive Order 12988, ''Civil Justice Reform'' (61 FR 4729; Feb. 7, 1996), requires that Executive agencies make every reasonable effort to ensure that the regulation: (1) Clearly specifies the preemptive effect; (2) clearly specifies the effect on existing Federal law or regulation; (3) provides a clear legal standard for affected conduct, while promoting simplification and burden reduction; (4) clearly specifies the retroactive effect, if any; (5) specifies whether administrative proceedings are to be required before

parties file suit in court; (6) adequately defines key terms; and (7) addresses other important issues affecting clarity and general draftsmanship under any guidelines issued by the Attorney General. This document is consistent with that requirement.

Pursuant to this Order, NHTSA notes as follows. The issue of preemption is discussed above. NHTSA notes further that there is no requirement that individuals submit a petition for reconsideration or pursue other administrative proceedings before they may file suit in court.

Unfunded Mandates Reform Act

Section 202 of the Unfunded Mandates Reform Act of 1995 (UMRA) requires federal agencies to prepare a written assessment of the costs, benefits, and other effects of proposed or final rules that include a Federal mandate likely to result in the expenditure by State, local, or tribal governments, in the aggregate, or by the private sector, of more than $100 million annually (adjusted for inflation with base year of 1995). Adjusting this amount by the implicit gross domestic product price deflator for 2010 results in $136 million (110.659/81.536 = 1.36). This NPRM will not result in any expenditure by State, local, or tribal governments or the private sector. Thus, this NPRM is not subject to the requirements of sections 202 and 205 of the UMRA.

Paperwork Reduction Act

Under the Paperwork Reduction Act of 1995, a person is not required to respond to a collection of information by a Federal agency unless the collection displays a valid OMB control number. There is not any information collection requirement associated with this NPRM. We do not anticipate any significant changes in current labeling and certification requirements for glazing manufacturers.

Executive Order 13045

Executive Order 13045 [33] applies to any rule that: (1) Is determined to be economically significant as defined under E.O. 12866, and (2) concerns an environmental, health or safety risk that NHTSA has reason to believe may have a disproportionate effect on children. If the regulatory action meets both criteria, we must evaluate the environmental health or safety effects of the proposed rule on children, and explain why the proposed regulation is preferable to other potentially effective and reasonably feasible alternatives considered by us.

This proposed rule does not pose such a risk for children. The primary effects of this proposal are to update the requirements applicable to automotive glazing.

National Technology Transfer and Advancement Act

Section 12(d) of the National Technology Transfer and Advancement Act (NTTAA) requires NHTSA to evaluate and use existing voluntary consensus standards in its regulatory activities unless doing so would be inconsistent with applicable law (*e.g.,* the statutory provisions regarding NHTSA's vehicle safety authority) or otherwise impractical.

Voluntary consensus standards are technical standards developed or adopted by voluntary consensus standards bodies. Technical standards are defined by the NTTAA as ''performance-based or design-specific technical specification and related management systems practices.'' They pertain to ''products and processes, such as size, strength, or technical performance of a product, process or material.''

Examples of organizations generally regarded as voluntary consensus standards bodies include the American Society for Testing and Materials (ASTM), the Society of Automotive Engineers (SAE), and the American National Standards Institute (ANSI). If NHTSA does not use available and potentially applicable voluntary consensus standards, we are required by the Act to provide Congress, through OMB, an explanation of the reasons for not using such standards.

In this proposal to adopt the glazing GTR, the agency is working to adopt a global consensus standard. While the proposed rule would decrease the standard's reliance on the currently referenced voluntary consensus standard ANSI Z26.1, we believe that our proposal to adopt the glazing GTR also satisfies the requirements of NTTAA. The GTR was developed by a global regulatory body and is designed to increase global harmonization of differing vehicle standards. Thus, we believe this NPRM satisfies NTTAA's command that agencies consider voluntary consensus standards in regulations.

Executive Order 13211

Executive Order 13211 [34] applies to any rule that: (1) is determined to be economically significant as defined under E.O. 12866, and is likely to have a significant adverse effect on the supply, distribution, or use of energy; or (2) that is designated by the Administrator of the Office of Information and Regulatory Affairs as a significant energy action. If the regulatory action meets either criterion, we must evaluate the adverse energy effects of the proposed rule and explain why the proposed regulation is preferable to other potentially effective and reasonably feasible alternatives considered by NHTSA.

The proposed rule seeks to harmonize the requirements of automotive safety glazing with those of other industrialized countries. The proposed rule will not affect the energy efficiency of motor vehicles is a negative manner. Therefore, this proposed rule will not have any adverse energy effects. Accordingly, this proposed rulemaking action is not designated as a significant energy action.

Regulation Identifier Number (RIN)

The Department of Transportation assigns a regulation identifier number (RIN) to each regulatory action listed in the Unified Agenda of Federal Regulations. The Regulatory Information Service Center publishes the Unified Agenda in April and October of each year. You may use the RIN contained in the heading at the beginning of this document to find this action in the Unified Agenda.

Plain Language

Executive Order 12866 requires each agency to write all rules in plain language. Application of the principles of plain language includes consideration of the following questions:

- Have we organized the material to suit the public's needs?
- Are the requirements in the rule clearly stated?
- Does the rule contain technical language or jargon that isn't clear?
- Would a different format (grouping and order of sections, use of headings, paragraphing) make the rule easier to understand?
- Would more (but shorter) sections be better?
- Could we improve clarity by adding tables, lists, or diagrams?
- What else could we do to make the rule easier to understand?

If you have any responses to these questions, please include them in your comments on this proposal.

Privacy Act

Anyone is able to search the electronic form of all comments received into any of our dockets by the

[33] 62 FR 19885 (Apr. 23, 1997).

[34] 66 FR 28355 (May 18, 2001).

name of the individual submitting the comment (or signing the comment, if submitted on behalf of an organization, business, labor union, etc.). You may review DOT's complete Privacy Act statement in the **Federal Register** published on April 11, 2000 (Volume 65, Number 70; Pages 19477–78) or you may visit *http://www.dot.gov/privacy.html.*

VIII. Public Participation

How do I prepare and submit comments?

Your comments must be written and in English. To ensure that your comments are correctly filed in the Docket, please include the docket number of this document in your comments. Your comments must not be more than 15 pages long.[35] We established this limit to encourage you to write your primary comments in a concise fashion. However, you may attach necessary additional documents to your comments. There is no limit on the length of the attachments.

Please submit your comments by any of the following methods:

- *Federal eRulemaking Portal:* go to *http://www.regulations.gov.* Follow the instructions for submitting comments on the electronic docket site by clicking on ''Help'' or ''FAQ.''
- *Mail:* Docket Management Facility, M–30, U.S. Department of Transportation, West Building, Ground Floor, Rm. W12–140, 1200 New Jersey Avenue SE., Washington, DC 20590.
- *Hand Delivery or Courier:* West Building Ground Floor, Room W12–140, 1200 New Jersey Avenue SE., between 9 a.m. and 5 p.m. Eastern Time, Monday through Friday, except Federal holidays.
- *Fax:* (202) 493–2251.

If you are submitting comments electronically as a PDF (Adobe) file, we ask that the documents submitted be scanned using Optical Character Recognition (OCR) process, thus allowing the agency to search and copy certain portions of your submissions.[36]

Please note that pursuant to the Data Quality Act, in order for substantive data to be relied upon and used by the agency, it must meet the information quality standards set forth in the OMB and DOT Data Quality Act guidelines. Accordingly, we encourage you to consult the guidelines in preparing your comments. OMB's guidelines may be accessed at *http://www.whitehouse.gov/omb/fedreg/reproducible.html.* DOT's guidelines may be accessed at *http://dmses.dot.gov/submit/DataQualityGuidelines.pdf.*

How can I be sure that my comments were received?

If you submit your comments by mail and wish Docket Management to notify you upon its receipt of your comments, enclose a self-addressed, stamped postcard in the envelope containing your comments. Upon receiving your comments, Docket Management will return the postcard by mail.

How do I submit confidential business information?

If you wish to submit any information under a claim of confidentiality, you should submit three copies of your complete submission, including the information you claim to be confidential business information, to the Chief Counsel, NHTSA, at the address given above under **FOR FURTHER INFORMATION CONTACT**. When you send a comment containing information claimed to be confidential business information, you should include a cover letter setting forth the information specified in our confidential business information regulation.[37]

In addition, you should submit a copy, from which you have deleted the claimed confidential business information, to the Docket by one of the methods set forth above.

Will the agency consider late comments?

We will consider all comments received before the close of business on the comment closing date indicated above under **DATES**. To the extent possible, we will also consider comments received after that date. Therefore, if interested persons believe that any new information the agency places in the docket affects their comments, they may submit comments after the closing date concerning how the agency should consider that information for the final rule.

If a comment is received too late for us to consider in developing a final rule (assuming that one is issued), we will consider that comment as an informal suggestion for future rulemaking action.

How can I read the comments submitted by other people?

You may read the materials placed in the docket for this document (e.g., the comments submitted in response to this document by other interested persons) at any time by going to *http://www.regulations.gov.* Follow the online instructions for accessing the dockets. You may also read the materials at the Docket Management Facility by going to the street address given above under **ADDRESSES**. The Docket Management Facility is open between 9 a.m. and 5 p.m. Eastern Time, Monday through Friday, except Federal holidays.

List of Subjects in 49 CFR Part 571

Imports, Incorporation by reference, Motor vehicle safety, Motor vehicles, Rubber and rubber products, and Tires.

In consideration of the foregoing, we propose to amend 49 CFR part 571 to read as follows:

PART 571—FEDERAL MOTOR VEHICLE SAFETY STANDARDS

1. The authority citation for part 571 continues to read as follows:

Authority: 49 U.S.C. 322, 20111, 30115, 30166 and 30177; delegation of authority at 49 CFR 1.50.

2. Section 571.5 is amended by adding paragraphs (h)(2)(n), (n)(1) through (n)(4), to read as follows:

§ 571.5 Matter incorporated by reference.

* * * * *

(h) * * *

(2) CIE S010/E:2004, Photometry—The CIE System of Physical Photometry, into § 571.205.

* * * * *

(n) International Organization for Standardization (ISO), 1, ch. de la Voie-Creuse, Case postale 56, CH–1211 Geneva 20, Switzerland. Telephone +41 22 749 01 11. Web site: *http://www.iso.org/iso/home.htm.*

(1) ISO Standard 6549, Road Vehicles—Procedure for H- and R-point determination, December 16, 1999, into § 571.205.

(2) ISO Standard 4130 Road Vehicles—Three-dimensional reference system and fiducial marks, August 1, 1978, into § 571.205.

(3) ISO Standard 2768–1: 1989, General Tolerances—Part 1: Tolerances for linear and angular dimensions without individual tolerance indications, into § 571.205.

(4) ISO Standard 2768–2: 1989, General Tolerances—Part 2: Geometrical tolerances for features without individual tolerance indications, into § 571.205.

* * * * *

3. Section 571.205 is revised to read as follows:

§ 571.205 Standard No. 205; Glazing materials.

S1. *Scope.* This standard specifies requirements for glazing materials for

[35] *See* 49 CFR 553.21.

[36] Optical character recognition (OCR) is the process of converting an image of text, such as a scanned paper document or electronic fax file, into computer-editable text.

[37] *See* 49 CFR part 512.

use in motor vehicles and motor vehicles equipment.

S2. *Purpose.* The purpose of this standard is to reduce injuries resulting from impact to glazing surfaces, to ensure a necessary degree of transparency in motor vehicle windows for driver visibility, and to minimize the possibility of occupants being thrown through the vehicle windows in collisions.

S3. *Application* This standard applies to passenger cars, multipurpose passenger vehicles, trucks, buses, motorcycles, slide-in campers, pickup covers designed to carry persons while in motion, to low speed vehicles, and to glazing materials for use in those vehicles.

S4. *Definitions.* Whenever this standard requires compliance with ANSI/SAE Z26.1–1996 (incorporated by reference, see § 571.5), the definitions used in that standard shall apply unless directly provided for otherwise in this Standard No. 205. Other than that exception, the following terms are defined:

Bullet resistant glazing means glazing constructed so as to be resistant to firearms.

Bullet resistant shield means a shield or barrier that is installed completely inside a motor vehicle behind and separate from glazing materials that independently comply with the requirements of this standard.

Camper means a structure designed to be mounted in the cargo area of a truck, or attached to an incomplete vehicle with motive power, for the purpose of providing shelter for persons.

Design glass outline means the design maximum unobstructed vehicle aperture designated to be glazed, before the glazing is installed or mounted, including all trims, but excluding obscuration bands.

Double-glazed unit means an assembly of two panes permanently assembled in manufacture and separated by a gap.

Symmetrical double-glazed unit means a double-glazed unit where the two component panes are identical (e.g., both tempered glass).

Asymmetrical double-glazed unit means a double-glazed unit where the two component panes are not identical (e.g., one is tempered glass and the other is laminated glass).

Design seat-back angle means the angle between the vertical line through the R point, as determined by ISO Standard 6549, Road Vehicles—Procedure for H- and R-point determination, December 16, 1999, (incorporated by reference, see § 571.5), and the torso line defined by the vehicle manufacturer.

Double window means an assembly of two individual panes separately installed within the same opening in the vehicle.

Eye-Point means the ''O'' Point.

Glass-plastics means glazing consisting of any glazing material which comprises one layer of glass and one or more layers of plastic in which a plastic surface of the product faces the inner side.

Glazing faced with plastics means either tempered-glass or laminated-glass with a layer of plastic on the inner side.

Glazing requisite for the driver's forward field of vision means all the glazing forward of a plane passing through the driver's ''R'' point, as determined by ISO Standard 6549, Road Vehicles—Procedure for H- and R-point determination, December 16, 1999, (incorporated by reference, see § 571.5), and perpendicular to the longitudinal median plane of the vehicle, through which the driver can view the road when driving or maneuvering the vehicle.

Glazing requisite for the driver's rearward field of vision means all glazing rearward of a plane passing through the driver's ''R'' point, as determined by ISO Standard 6549, Road Vehicles—Procedure for H- and R-point determination, December 16, 1999, (incorporated by reference, see § 571.5), and perpendicular to the longitudinal median plane of the vehicle, through which the driver can view the road when driving or maneuvering the vehicle.

''H'' Point means the pivot center of the torso and thigh of the 3 DH machine installed in the vehicle seat. The 3 DH machine corresponds to that described in ISO Standard 6549, Road Vehicles—Procedure for H- and R-point determination, December 16, 1999, (incorporated by reference, see § 571.5) (The coordinates of the H point are determined in relation to the fiducial marks defined by the vehicle manufacturer, according to the three-dimensional system corresponding to ISO Standard 4130, Road Vehicles—Three-dimensional reference system and fiducial marks, August 1, 1978, (incorporated by reference, see § 571.5)).

Height of segment ''h'' means the maximum distance, measured at right angles to the glazing, separating the inner surface of the glazing from a plane passing through the ends of the glazing. (See section 6.16, Figure 24.)

Inclination angle of a windshield means the angle included between a vertical line and a straight line passing through the top and bottom edges of the inner side of the windshield, when both lines are contained in the vertical plane through the longitudinal axis of the vehicle.

Inner side means the side of glazing which is facing towards the passenger compartment when the material is mounted in the vehicle.

Interlayer means any material designed to be used to hold together the component layers of laminated-glass.

Laminated-glass means glazing consisting of two or more layers of glass held together by one or more inter-layers of plastic material.

Nominal thickness means the manufacturer's design thickness with a tolerance of $\pm$ (n $\times$ 0.2 mm) where n equals the number of glass layers in the glazing.

''O'' Point means the point located 625 millimeters (mm) above the ''R'' Point of the driver's seat in the vertical plane parallel to the longitudinal median plane of the vehicle for which the windshield is intended, passing through the axis of the steering wheel.

Opaque obscuration means any area of the glazing preventing light transmission, including any screen-printed area, whether solid or dot-printed, but excluding any shade band.

Optical deviation means the angle between the true and the apparent direction of a point viewed through the windshield, the magnitude of the angle being a function of the angle of incidence of the line of sight, the thickness and inclination of the windshield, and the radius of curvature ''r'' at the point of incidence.

Optical distortion means an optical defect in a windshield that changes the appearance of an object viewed through the windshield.

Outer side means the side of glazing which is facing away from the passenger compartment when the material is mounted in the vehicle.

Pane means any single piece of glazing other than a windshield.

Curved pane means a pane with a height of segment ''h'' greater than 10 millimeters (mm) per linear meter.

Flat pane means a pane with a height of segment equal to or less than 10 mm per linear meter.

Pickup cover means a camper having a roof and sides but without a floor, designed to be mounted on and removable from the cargo area of a truck by the user.

Prime glazing manufacturer means a manufacturer that fabricates, laminates, or tempers glazing materials.

''*R'' Point* means the seating reference point.

Radius of curvature ''r'' means the smallest radius of arc of the glazing as measured in the most curved area.

Regular light transmittance means light transmittance measured perpendicularly to the glazing.

Sample means a specially prepared piece of glazing representative of a finished product or a piece cut from a finished product.

Seating reference point means the position of the H-point with the driver's seat in the design driving position as defined by the vehicle manufacturer.

Secondary image means a spurious or ghost image, in addition to the bright primary image, usually seen at night when the object being viewed is very bright in relation to its surroundings, for example, the headlights of an approaching vehicle.

Secondary image separation means the angular distance between the position of the primary and secondary images.

Shade band means any area of the glazing with a reduced light transmittance, excluding any opaque obscuration.

Slide-in camper means a camper having a roof, floor, and sides, designed to be mounted on and removable from the cargo area of a truck by the user.

Test piece means a sample or a finished product of glazing.

Transparent area of the windshield means the glazing area contained within the design glass outline, excluding any allowed opaque obscuration (see paragraph S6.15.3.4.), but including any shade band.

Uniformly tempered-glass means glazing consisting of a single layer of glass which has been subjected to special treatment to increase its mechanical strength and to condition its fragmentation after shattering.

Windshield means the glazing in front of the driver through which the driver views the road ahead.

S5 *Requirements.*

S5.1 Glazing other than that composed of glass, laminated glass, or glass faced with plastic; glazing manufactured for installation in motorcycles, slide-in campers, and pickup covers designed to carry persons while in motion; bullet resistant glazing. The following glazing must conform to ANSI/SAE Z26.1–1996 (incorporated by reference, see § 571.5). Such glazing must also conform to other applicable requirements in this S5.

(a) Glazing other than that composed of glass, laminated glass, or glass faced with plastic;

(b) All glazing manufactured for installation in motorcycles, slide-in campers, and pickup covers designed to carry persons while in motion; and

(c) Bullet resistant glazing.

S5.1.1 For glazing subject to S5.1, glazing for use in multipurpose passenger vehicles shall conform to the requirements for glazing for use in trucks as specified in ANSI/SAE Z26.1–1996 (incorporated by reference, see § 571.5).

S5.2 Glazing composed of glass, laminated glass, or glass faced with plastic manufactured for installation in passenger cars, multipurpose passenger vehicles, trucks and buses. Glazing composed of glass, laminated glass, or glass faced with plastic manufactured for installation in passenger cars, multipurpose passenger vehicles, trucks and buses, must meet the requirements of this S5.2. Such glazing must also conform to other applicable requirements in this S5.

S5.2.1 *Requirements applicable to all glazing composed of glass, laminated glass, or glass faced with plastic.*

S5.2.1.1 *Light transmittance test*

S5.2.1.1.1 When tested in accordance with paragraph S6.10, the light transmittance of glazing requisite for the driver's forward field of vision shall not be less than 70 percent. Glazing in the windshield and in side windows forward of a vertical plane tangent to the rearmost point on the seat back when the seat is adjusted to its nominal upright driving position and with the seating reference point in the most rearward position, is requisite for the driver's forward field of vision.

S5.2.1.1.2 For passenger cars, when tested in accordance with paragraph S6.10, the light transmittance of glazing requisite for the driver's rearward field of vision shall not be less than 70 percent. For trucks, buses, and multipurpose passenger vehicles, where other means are provided to afford rearward visibility of the roadway, glazing to the rear of the plane described in S5.2.1.1.1 is excluded from the light transmittance test.

S5.2.1.1.3 For passenger cars, all glazing in portals in the passenger compartment is requisite for driving visibility, excluding roof portals.

S5.2.1.1.4 Three test pieces shall be tested and each shall meet the requirements. The test pieces shall be as described in paragraph S6.10.3.

S5.2.1.2 *Test of resistance to abrasion*

S5.2.1.2.1 Except as provided in paragraph S5.2.1.2.2, when tested in accordance with paragraph S6.5 for 1,000 cycles, light scatter shall not exceed 2 percent.

S5.2.1.2.2 For glazing faced with plastic, when tested on the inner side in accordance with paragraph S6.5 for 100 cycles, light scatter shall not exceed 4 percent.

S5.2.1.2.3 Three test pieces shall be tested and each shall meet the requirements. The test pieces shall be as described in paragraph S6.5.3.

S5.2.2 *Additional requirements applicable to all glazing faced with plastic.*

S5.2.2.1 *Test of resistance to temperature changes.* When tested in accordance with paragraph S6.9, the test pieces shall not show any evidence of cracking, clouding, separation of layers or apparent deterioration. Two test pieces shall be tested and each shall meet the requirements. The test pieces shall be as described in paragraph S6.9.2.

S5.2.2.2 *Test of resistance to fire.* When tested in accordance with paragraph S6.13, the rate of burning shall not exceed 90 millimeters per minute (mm/min). Five test pieces shall be tested and each shall meet the requirements. The test pieces shall be as described in paragraph S6.13.3.

S5.2.2.3 *Test of resistance to chemicals.* When tested in accordance with paragraph S6.14, the test piece shall not exhibit any softening, tackiness, crazing, or apparent loss of transparency. Four test pieces per chemical shall be tested and at least three shall meet the requirements. The test pieces shall be as described in paragraph S6.14.3

S5.2.3 *Additional requirements applicable to all laminated glass and all glazing faced with plastics.*

S5.2.3.1 *Test of resistance to radiation.* When tested in accordance with paragraph S6.7, the total light transmittance when measured pursuant to paragraph S6.10, shall not fall below 95 percent of the original value before irradiation and for glazing required to have a minimum light transmittance of 70 percent, shall not fall below 70 percent. Three test pieces shall be tested and each shall meet the requirements. The test pieces shall be as described in paragraph S6.7.3.

S5.2.3.2 *Test of resistance to high temperature.* When tested in accordance with paragraph S6.6, no significant change, e.g., whitening, bubbles, or delamination, excepting surface cracks, shall form more than 15 millimeters (mm) (.059 inch (in)) from an uncut edge or 25 mm (0.98 in) from a cut edge of the test piece or sample or more than 10 mm (0.39 in) away from any cracks which may occur during the test. Three test pieces shall be tested and each shall meet the requirements. The test pieces shall be as described in paragraph S6.6.2.

S5.2.3.3 *Test of resistance to humidity.* When tested in accordance with paragraph S6.8, at the time specified in paragraph S6.8.1.4 or S6.8.1.5, as appropriate, no significant

change, e.g., whitening, bubbles, or delamination, excepting surface cracks, shall be observed more than 10 mm (0.39 in) from the uncut edges and more than 15 mm (.059 in) from the cut edges. Three test pieces shall be tested and each shall meet the requirements. The test pieces shall be as described in paragraph S6.8.2.

S5.2.4. *Additional requirements applicable to windshields*

S5.2.4.1 *Optical distortion test.* When tested in accordance with paragraph S6.11, optical distortion shall not exceed the values given below for each zone or test area.

TABLE TO S5.2.4.1

Vehicle type	Zone or test area	Maximum values of optical distortion
Passenger cars, multipurpose passenger vehicles, and buses and trucks 4,536 kilograms (kg) (10,000 pounds (lb)) GVWR and less.	Zone A—extended according to paragraph S6.15.3.2.2.	2′ of arc.
	Zone B—reduced according to paragraph S6.15.3.2.4.	6′ of arc.
Buses and trucks over 4,536 kg (10,000 lb) GVWR	Zone I—according to paragraph S6.15.3.3.2.	2′ of arc.

S5.2.4.1.1 No measurements shall be made in a peripheral area 25 mm (0.98 in) inboard of the design glass outline and of any opaque obscuration, provided that it does not impinge into the extended zone A or zone I.

S5.2.4.1.2 In the case of split windshields, no measurements shall be made in a strip 35 mm (1.38 in) from the edge of the windshield which is adjacent to the dividing pillar.

S5.2.4.1.3 A maximum value of 6′ of arc is permitted for all portions of Zone I or Zone A in a peripheral area 100 mm (3.94 in) inboard of the design glass outline.

S5.2.4.1.4 Four windshields shall be tested and each shall meet the requirements.

S5.2.4.2 *Secondary image separation test.* When tested in accordance with paragraph S6.12, separation of the primary and secondary image shall not exceed the values given below for each zone or test area.

TABLE TO S5.2.4.2

Vehicle type	Zone or test area	Maximum values of the separation of the primary and secondary images
Passenger cars, multipurpose passenger vehicles, and buses and trucks 4,536 kg (10,000 lb) GVWR and less.	Zone A—extended according to paragraph S6.15.3.2.2.	15′ of arc.
	Zone B—reduced according to paragraph S6.15.3.2.4.	25′ of arc.
Buses and trucks over 4,536 kg (10,000 lb) GVWR	Zone I—according to paragraph S6.15.3.3.2.	15′ of arc.

S5.2.4.2.1 No measurements shall be made in a peripheral area 25 mm (0.98 in) inboard of the design glass outline and of any opaque obscuration, provided that it does not impinge into the extended zone A or zone I.

S5.2.4.2.2 In the case of split windshields, no measurements shall be made in a strip 35 mm (1.38 in) from the edge of the glass pane which is to be adjacent to the dividing pillar.

S5.2.4.2.3 A maximum value of 25 degrees of arc is permitted for all portions of zone I or zone A in a peripheral area 100 mm (3.94 in) inboard of the design glass outline.

S5.2.4.2.4 Four windshields shall be tested and each shall meet the requirements.

S5.2.4.3 *2,260 gram (g) (5 lb) ball test.* When tested in accordance with paragraph S6.4, at the drop height of 4 meters (m) (−0 + 25 mm), (12.12 feet (ft) − 0 + 0.98 in) the ball shall not pass through the glazing within five seconds after the moment of impact. Twelve test pieces shall be tested and at least eleven shall meet the requirements. The test pieces shall be as described in paragraph S6.4.4.

S5.2.4.4 *227 g (8 ounce (oz)) ball test.* When tested in accordance with paragraph S6.3, at the temperature and drop height specified in paragraph S6.3.3.4, the test piece shall meet the following requirements:

S5.2.4.4.1 The ball does not pass through the test piece.

S5.2.4.4.2 The test piece does not break into separate pieces.

S5.2.4.4.3 Tears in the interlayer are allowed provided that the ball does not pass through the test piece.

S5.2.4.4.4 If the interlayer is not torn, the mass of fragments detached from the side of the glass opposite to the point of impact shall not exceed the applicable values specified in paragraph S6.3.3.4.

S5.2.4.4.5 Ten test pieces shall be tested at each of the specified temperatures and at least eight of each ten shall meet the requirements. The test pieces shall be as described in paragraph S6.3.4.

S5.2.5 *Additional requirements applicable to panes.*

S5.2.5.1 *Requirements applicable only to uniformly-tempered glass panes.*

S5.2.5.1.1 *Fragmentation test.* When tested in accordance with paragraph S6.2, at the points specified in paragraph S6.2.2.2, uniformly-tempered glass shall fragment as follows:

S5.2.5.1.1.1 The number of fragments in any 5 centimeter (cm) x 5 cm (1.97 in x 1.97 in) square shall not be less than 40.

S5.2.5.1.1.2 For the purposes of this requirement, a fragment extending across at least one side of a square shall count as half a fragment.

S5.2.5.1.1.3 When a fragment extends beyond the excluded area only the part of the fragment falling outside of the area shall be assessed.

S5.2.5.1.1.4 Fragments of an area exceeding 3 cm^2 (1.18 in^2) shall not be allowed except in the parts defined in paragraph S6.2.2.3.

S5.2.5.1.1.5 No fragment longer than 100 mm (3.94 in) in length shall be allowed except in the areas defined in paragraph S6.2.2.3 provided that the fragment ends do not converge to a point and if they extend to the edge of the pane they do not form an angle of more than 45 degrees to the edge.

S5.2.5.1.1.6 Four panes shall be tested from each point of impact and at least three shall meet the requirements.

S5.2.5.1.2 *227 g (8 oz) ball test.* When tested in accordance with paragraph S6.3, at the drop height specified in paragraph S6.3.3.2, the test piece shall not break. Six test pieces shall be tested and at least five shall meet the requirements. The test pieces shall be as described in paragraph S6.3.4.

S5.2.5.2 *Requirements applicable only to laminated-glass and glass-plastic panes.*

S5.2.5.2.1 *227 g (8 oz) ball test.* When tested in accordance with paragraph S6.3, at the drop height specified in paragraph S6.3.3.3, the test piece shall meet the following requirements:

S5.2.5.2.1.1 The ball shall not pass through the test piece.

S5.2.5.2.1.2 The laminate shall not break into separate pieces.

S5.2.5.2.1.3 At the point immediately opposite the point if impact, small fragments of glass may leave the specimen, but the small area thus affected shall expose less than 645 mm^2 (25.39 in^2) of reinforcing or strengthening material, the surface of which shall always be well covered with tiny particles of tightly adhering glass. Total separation of glass from the reinforcing or strengthening material shall not exceed 1935 mm^2 (71.18 in^2) on either side. Spalling and small chips broken off the outer glass surface opposite the point of impact and adjacent to the area of impact is not to be considered a failure.

S5.2.5.2.1.4 Eight test pieces shall be tested and at least six shall meet the requirements. The test pieces shall be as described in paragraph S6.3.4.

S5.2.5.3 *Requirements applicable only to double-glazed units.* Each component pane forming the double-glazed unit shall be separately subjected to the requirements set out in paragraph S6, as appropriate for that type of glazing.

S5.3 *Low speed vehicles.* Windshields of low speed vehicles must meet the ANSI/SAE Z26.1–1996 (incorporated by reference, see § 571.5), specifications for either AS–1 or AS–4 glazing.

S5.4 *Item 4A glazing.* For glazing subject under this standard to ANSI/SAE Z26.1–1996 (incorporated by reference, see § 571.5), Item 4A glazing may be used in all area in which Item 4 safety glazing may be used, and also for side windows rearward of the ''C'' pillar, i.e., Item 4A glazing maybe used under Item 4a paragraph S(b) of ANSI/SAE Z26.1–1996 only in side windows rearward of the ''C'' pillar.

S5.5 *Edges.* In vehicles except school buses, exposed edges shall be treated in accordance with SAE J673 ''Automotive Safety Glazing'' (incorporated by reference, see § 571.5). In school buses, exposed edges shall be banded.

S5.6 *Certification and marking*

S5.6.1 A prime glazing material manufacturer must certify, in accordance with 49 U.S.C. 30115, each piece of glazing material to which this standard applies that is designed—

S5.6.1.1 As a component of any specific motor vehicle or camper; or

S5.6.1.2 To be cut into components for use in motor vehicles or items of motor vehicle equipment.

S5.6.2 A prime glazing material manufacturer certifies its glazing by adding the symbol ''DOT'' and a manufacturer's code mark that NHTSA assigns to the manufacturer, in letters and numerals of the same size, to the marks required by:

S5.6.2.1 Section 7 of ANSI/SAE Z26.1–1996 (incorporated by reference, see § 571.5), for glazing other than that composed of glass, laminated glass, or glass faced with plastic, or

S5.6.2.2 Section 5.6.4 below, for glazing composed of glass, laminated glass, or glass faced with plastic.

S5.6.3 NHTSA will assign a code mark to a manufacturer after the manufacturer submits a written requires to the Office of Vehicle Safety Compliance, National Highway Traffic Safety Administration, 1200 New Jersey Avenue SE, Washington, DC 20590. The request must include the company name, address, and a statement from the manufacturer certifying its status as a prime glazing manufacturer as defined in S4.

S5.6.4 *Markings for glazing composed of glass, laminated glass, or glass faced with plastic*

S5.6.4.1 General requirements for markings.

S5.6.4.1.1 All marking shall be clearly legible from at least one side of the glazing, indelible, and at least 1.78 mm (0.070 in) in height.

S5.6.4.1.2 All glazing shall be marked with the manufacturer's distinctive designation or trademark.

S5.6.4.1.3 *Identification marks.* Each piece of glazing shall bear the appropriate marks set out in this section.

(a) ''I'' for uniformly-tempered glass.

(b) ''II'' for laminated-glass.

(c) ''III'' for glass-plastics.

(d) ''IV'' for a double glazed unit.

(e) *Additional identification marks.* Glazing materials, which in a single sheet of material are intentionally made with an area having a luminous transmittance of not less than 70 percent, adjoining an area that has less than 70 percent luminous transmittance, shall be permanently marked at the edge of the sheet to show the limits of the area that has a 70 percent luminous transmittance level. The marking shall be ↓II or ↑III with the arrow indicating the area of the material that has a luminous transmittance of not less than 70 percent.

S5.7 *Installation*

S5.7.1 Only safety glazing meeting the performance requirements applicable to windshields under paragraphs S5.2.1, S5.2.3, and S5.2.4 may be used for installation in windshields of passenger cars, multipurpose passenger vehicles, trucks and buses.

S5.7.2 Safety glazing composed of laminated glass meeting the requirements of this standard may be used anywhere in a passenger car, multipurpose passenger vehicle, truck or bus.

S5.7.3 Safety glazing composed of tempered glass, and glass faced with plastic meeting the requirements of this standard may be used anywhere in a passenger car, multipurpose passenger vehicle, truck or bus, except in a windshield.

S5.7.4 Safety glazing having 70 percent light transmission when tested in accordance with S6.10 must be used in all glazing area requisite for driving visibility.

S5.7.5 Allowable locations for installations of safety glazing composed of all other materials and in other motor vehicle types shall follow ANSI/SAE Z26.1–1996 (incorporated by reference, see § 571.5).

S5.8 *Aftermarket replacement glazing.* Glazing intended for aftermarket replacement is required to meet the requirements of this standard or the requirements of 49 CFR 571.205(a) applicable to the glazing being replaced.

S6. *Test Procedures for Assessing Conformance to S5.2*

S6.1 *General test conditions.* Unless specified otherwise, the test conditions shall be: temperature: 20 ± 5 °C, (68 ± 9 °F) atmospheric pressure: 860 to 1060 mbar, relative humidity: 60 ± 20 percent.

S6.2 *Fragmentation test.*

S6.2.1 Apparatus. To obtain fragmentation, a spring-loaded center punch or a hammer of 75 g ± 5g, (2.65 oz ± 0.18 oz) with a point having a radius of curvature of 0.2 ± 0.05 mm (0.008 in ± 0.002 in), shall be used.

S6.2.2 Procedure.

S6.2.2.1 The test piece to be tested shall not be rigidly secured; it may however be fastened on an identical test piece by means of adhesive tape applied all round the edge.

S6.2.2.2 One test shall be carried out at each of the prescribed point of impact.

S6.2.2.3 Fragmentation shall not be checked in a strip 2 cm (0.79 in) wide round the edge of the samples, this strip representing the frame of the glass, nor within a radius of 7.5 cm (2.95 in) from the point of impact.

S6.2.2.4 Examination of the fragmentation pattern shall start within 10 seconds and shall be completed within 3 minutes after the impact.

S6.2.3 Points of impact for uniformly tempered glass panes are as follows, and represented in S6.16., Figure 23:

S6.2.3.1 Point 1: In the geometric center of the glass.

S6.2.3.2 Point 2: For curved glass panes only, this point shall be selected on the largest median in that part of the pane where the radius of curvature ''r'' of the glazing is less than 200 mm (7.84 in).

S6.2.3.3 Test pieces: Eight panes.

S6.3 *227 g (8 oz) ball test.*

S6.3.1 Apparatus.

S6.3.1.1 Solid, smooth, hardened-steel ball with a mass of 227 g ± 2 g (8 oz ± 0.07 oz).

S6.3.1.2 Means for dropping the ball freely from the height in paragraph S6.3.3., or a means for giving the ball a velocity equivalent to that obtained by the free fall. When a device to project the ball is used, the tolerance on velocity shall be ± 1 per cent of the velocity equivalent to that obtained by the free fall.

S6.3.1.3 Supporting fixture, such as that shown in Figure 1, composed of steel frames, with machined borders 15 mm (0.59 in) wide, fitting one over the other and faced with rubber gaskets 3 mm (0.12 in) thick and 15 mm (0.59 in) wide and of hardness 50 ± 10 International Rubber Hardness Degree (IRHD). The lower frame rests on a steel box 150 mm (5.91 in) high. The test piece is held in place by the upper frame, the mass of which is 3 kg (6.61 lb). The supporting frame is welded onto a sheet of steel 12 mm (0.47 in) thick resting on the floor with an interposed sheet of rubber 3 mm (0.12 in) thick and of hardness 50 ± 10 IRHD.

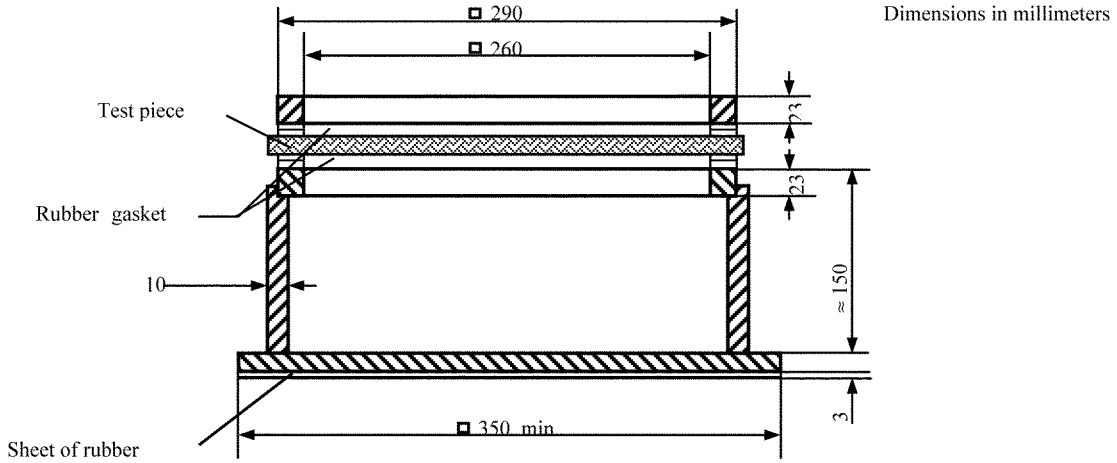

Figure 1: Support for ball tests

S6.3.2 Procedure.

S6.3.2.1 Condition the test piece at the temperature specified in paragraph S6.1 for at least four hours immediately preceding the test. In the case of laminated-glass and glass-plastic windshields, the temperatures will be as specified in 6.3.3.4.

S6.3.2.2 Place the test piece in the fixture described in paragraph S6.3.1.3. The plane of the test piece shall be perpendicular, within 3 degrees, to the incident direction of the ball.

S6.3.2.3 The point of impact shall be within 25 mm (0.98 in) of the center of the supported area for a drop height less than or equal to 6 m (19.69 ft), and within 50 mm (1.97 in) of the center of the supported area for a drop height greater than 6 m (19.69 ft).

S6.3.2.4 The ball shall strike the outer face of the test piece.

S6.3.2.5 The ball shall make only one impact.

S6.3.3 Drop height

S6.3.3.1 The drop height shall be measured from the under-face of the ball to the upper face of the test piece.

S6.3.3.2 For uniformly tempered glass panes, the drop height shall be 2.0 m −0 + 5 mm (6.56 ft −0 + 0.20 in).

S6.3.3.3 For laminated-glass and glass-plastic panes, the drop height shall be 9 m −0 + 25 mm (29.53 ft −0 + 0.98 in).

S6.3.3.4 For laminated-glass and glass-plastic windshields, the drop height and the mass of the detached fragments shall be as indicated in the following table, where ''e'' equals the nominal thickness of the specimen being tested. Ten test pieces shall be tested at a temperature of + 40 ± 2 °C (+ 104 ± 3.5 14; °F) and ten at a temperature of −20 ± 2 °C (−4 ± 3.5 °F).

TABLE TO S6.3.3.4

Nominal thickness of test pieces mm (in)	+ 40 ± 2 °C (+ 104 ± 3.5 °F)		− 20 ± 2° C (− 4 ± 3.5° F)	
	Height of fall m (ft)	Maximum permitted mass of the fragments g (oz)	Height of fall m (ft)	Maximum permitted mass of the fragments g (oz)
e ≤ 4.5 (0.18)	9 (29.53)	12 (0.42)	8.5 (27.89)	12 (0.42)
4.5 (0.18) < e ≤ 5.5 (0.22)	9 (29.53)	15 (0.53)	8.5 (27.89)	15 (0.53)
5.5 (0.22) ≤ e ≤ 6.5 (0.26)	9 (29.53)	20 (0.71)	8.5 (27.89)	20 (0.71)
e > 6.5 (0.26)	9 (29.53)	25 (0.88)	8.5 (27.89)	25 (0.88)

S6.3.4 Test pieces.

S6.3.4.1 The test pieces shall be flat samples measuring 300 x 300 mm (11.81 x 11.81 in), specially made or cut from the flattest part of a windshield or pane.

S6.3.4.2 Test pieces can alternatively be finished products that may be supported over the apparatus described in paragraph S6.3.1.

S6.4 *2,260 g (4.98 lb) ball test.*

S6.4.1 Apparatus.

S6.4.1.1 Solid hardened-steel ball with a mass of 2,260 g ± 20 g (4.98 lb ± 0.71 oz).

S6.4.1.2 Provide a means for dropping the ball freely from the height specified in S6.4.3 or means for giving the ball a velocity equivalent to that obtained by the free fall. When a device to project the ball is used, the tolerance on velocity shall be ± 1 percent of the velocity equivalent to that obtained by the free fall.

S6.4.1.3 The supporting fixture shall be as shown in Figure 1 and identical with that described in S6.3.1.3.

S6.4.2 Procedure.

S6.4.2.1 Condition the test piece at the temperature specified in paragraph S6.1 for at least four hours immediately preceding the test.

S6.4.2.2 Place the test piece in the supporting fixture. The plane of the test piece shall be perpendicular within 3 degrees, to the incident direction of the ball.

S6.4.2.3 In the case of glass-plastics glazing the test piece shall be clamped to the support. All other glazing shall not be clamped.

S6.4.2.4 The point of impact shall be within 25 mm (0.98 in) of the geometric center of the test piece.

S6.4.2.5 The ball shall strike the inner face of the test piece.

S6.4.2.6 The ball shall make only one impact.

S6.4.3 Drop height.

S6.4.3.1 The drop height shall be measured from the under face of the ball to the upper face of the test piece.

S6.4.3.2 The drop height shall be 4.0 m − 0 + 25 mm (12.12 ft − 0 + 0.98 in).

S6.4.4 Test pieces.

S6.4.4.1 The test pieces shall be flat samples measuring 300 x 300 mm (11.81 x 11.81 in), specially made or cut from the flattest part of a windshield.

S6.4.4.2 Test pieces can alternatively be finished products that may be supported over the apparatus described in paragraph S6.3.1.

S6.5 *Resistance to abrasion test.*

S6.5.1 Apparatus.

S6.5.1.1 Abrading instrument, as shown in Figure 2, and consisting of:

S6.5.1.1.1 A horizontal turntable, with center clamp, which revolves counter-clockwise at 65 to 75 revolutions per minute (rev/min).

S6.5.1.1.2 Two weighted parallel arms each carrying a special abrasive wheel freely rotating on a ball-bearing horizontal spindle; each wheel rests on the test specimen under the pressure exerted by a mass of 500 g (1.1 lb).

S6.5.1.1.3 The turntable of the abrading instrument shall rotate regularly, substantially in one plane (the deviation from this plane shall not be greater than ± 0.05 mm (0.20 in) at a distance of 1.6 mm (0.06 in) from the turntable periphery).

S6.5.1.1.4 The wheels shall be mounted in such a way that when they are in contact with the rotating test piece they rotate in opposite directions so as to exert, twice during each rotation of the test piece, a compressive and abrasive action along curved lines over an annular area of about 30 cm^2 (11.81 in^2).

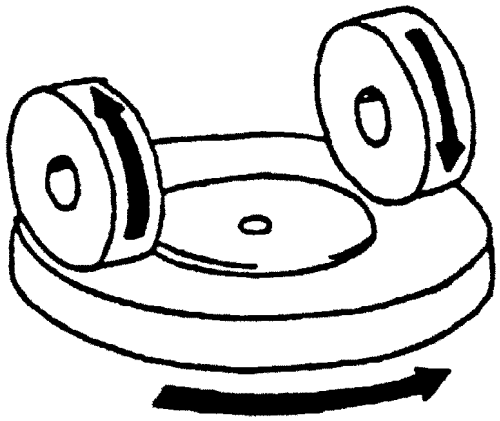

Figure 2: Diagram of abrading instrument

S6.5.1.2 Abrasive wheels, each 45 to 50 mm (1.77 to 1.97 in) in diameter and 12.5 mm (0.49 in) thick, composed of a special finely-screened abrasive embedded in a medium hard rubber.

S6.5.1.2.1 The wheels shall have a hardness of 72 ± 5 IRHD, as measured at four points equally spaced on the centerline of the abrading surface, the pressure being applied vertically along a diameter of the wheel and the readings being taken 10 seconds after full application of the pressure.

S6.5.1.2.2 The abrasive wheels shall be prepared for use by very slow rotation against a sheet of flat glass to ensure that their surface is completely even.

S6.5.1.3 Light source consisting of an incandescent lamp with its filament contained within a parallelepiped measuring 1.5 mm x 1.5 mm x 3 mm (0.06 in x 0.06 in x 0.12 in). The voltage at the lamp filament shall be such that the color temperature is 2,856 ± 50 K. This voltage shall be stabilized within ± 1/1000 V (Volts).

S6.5.1.4 Optical system consisting of a lens with a focal length ''f'' of at least 500 mm (19.69 in) and corrected for chromatic aberrations.

S6.5.1.4.1 The full aperture of the lens shall not exceed f/20.

S6.5.1.4.2 The distance between the lens and the light source shall be adjusted in order to obtain a light beam which is substantially parallel.

S6.5.1.4.3 A diaphragm shall be inserted to limit the diameter of the light beam to 7 ± 1 mm (0.28 ± 0.04 in). This diaphragm shall be situated at a distance of 100 ± 50 mm (3.94 ± 1.97 in) from the lens on the side remote from the light source. The point of measurement shall be taken at the center of the light beam.

S6.5.1.5 Equipment for measuring scattered light (Figure 3), consisting of a photoelectric cell with an integrating sphere 200 to 250 mm (7.87 to 9.84 in) in diameter. The sphere shall be equipped with entrance and exit ports for the light. The entrance port shall be circular and have a diameter at least twice that of the light beam. The exit port of the sphere shall be provided with either a light trap or a reflectance standard, according to the procedure described in paragraph S6.5.2.6, below. The light trap shall absorb all the light when no test piece is inserted in the light beam.

S6.5.1.5.1 The axis of the light beam shall pass through the center of the entrance and exit ports. The diameter b of the light-exit port shall be equal to 2 a tan 4°, where ''a'' is the diameter of the sphere. The photoelectric cell shall be mounted in such a way that it cannot be reached by light coming directly from the entrance port or from the reflectance standard.

S6.5.1.5.2 The surfaces of the interior of the integrating sphere and the reflectance standard shall be of substantially equal reflectance and shall be matte and non-selective.

S6.5.1.5.3 The output of the photoelectric cell shall be linear within ± 2 percent over the range of luminous intensities used. The design of the instrument shall be such that there is no galvanometer deflection when the sphere is dark.

S6.5.1.5.4 The whole apparatus shall be checked at regular intervals by means of calibration standards of defined haze.

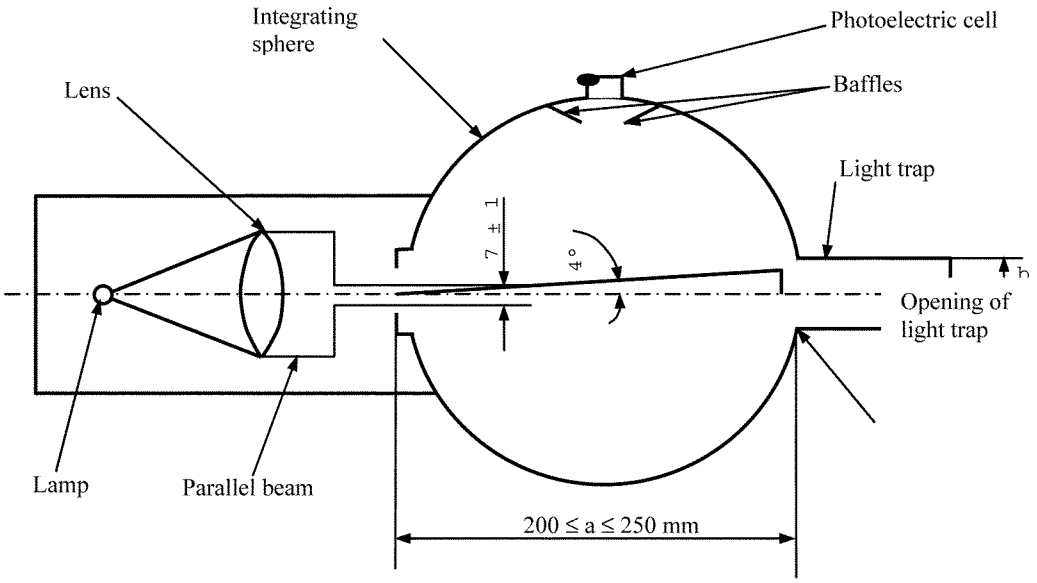

Figure 3: Hazemeter

S6.5.2 Procedure.

S6.5.2.1 The abrasion test shall be carried out on that surface of the test piece which represents the outer side of the glass pane and also on the inner side if of plastics material.

S6.5.2.2 Immediately before and after the abrasion, clean the test pieces in the following manner:

(a) Wipe with a linen cloth under clean running water;

(b) Rinse with distilled or demineralised water;

(c) Blow dry with oxygen or nitrogen;

(d) Remove possible traces of water by dabbing softly with a damp linen cloth. If necessary, dry by pressing lightly between two linen cloths.

(e) Any treatment with ultrasonic equipment is prohibited.

S6.5.2.3 After cleaning, the test pieces shall be handled only by their edges and shall be stored to prevent damage to, or contamination of, their surfaces.

S6.5.2.4 Recondition the test pieces as specified in paragraph S6.1 for a minimum time of 48 hours.

S6.5.2.5 Immediately place the test piece against the entrance port of the integrating sphere. The angle between a line perpendicular to the surface of the

test piece and the axis of the light beam shall not exceed 8 degrees.

S6.5.2.6 Take four readings as indicated in the following table:

TABLE TO S6.5.2.6

Reading	With test piece	With light trap	With reflectance standard	Represents
T_1	No	No	Yes	Incident light.
T_2	Yes	No	Yes	Total light transmitted by test piece.
T_3	No	Yes	No	Light scattered by instrument.
T_4	Yes	Yes	No	Light scattered by instrument and test piece.

S6.5.2.7 Repeat readings for T_1, T_2, T_3 and T_4 with other specified positions of the test piece to determine uniformity.

S6.5.2.8 Calculate the total transmittance $T_t = T_2/T_1$.

S6.5.2.9 Calculate the diffuse transmittance Td as follows:

$$T_d = \frac{T_4 - T_3(T_2 / T_1)}{T_1 - T_3}$$

S6.5.2.10 Calculate the percentage haze, or light, or both, scattered, as follows:

$$\text{S6.5.2.11 Haze, or light or both, scattered} = \frac{T_d}{T_t} \times 100\ \%$$

S6.5.2.12 Measure the initial haze of the test piece at a minimum of four equally spaced points in the unabraded area in accordance with the formula above. Average the results for each test piece. In lieu of the four measurements, an average value may be obtained by rotating the piece uniformly at 3 rev/sec or more.

S6.5.2.13 For each type of safety glazing, carry out three tests with the same load. Use the haze as a measure of the subsurface abrasion, after the test piece has been subjected to the abrasion test.

S6.5.2.14 Measure the light scattered by the abraded track at a minimum of four equally spaced points along the track in accordance with the formula above. Average the results for each test piece. In lieu of the four measurements, an average value may be obtained by rotating the piece uniformly at 3 rev/sec or more.

S6.5.3 Test pieces: The test pieces shall be flat samples measuring 100 x 100 mm (3.94 x 3.94 in).

S6.6 *Resistance to high temperature test.*

S6.6.1 Procedure.

S6.6.1.1 Heat the test piece to 100 °C (212 °F).

S6.6.1.2 Maintain this temperature for a period of two hours, then allow the test pieces to cool to the temperature specified in paragraph S6.1.

S6.6.1.3 If the test piece has both external surfaces of inorganic material, the test may be carried out by immersing the test piece vertically in boiling water for the specified period of time in S6.6.1.2, care being taken to avoid undue thermal shock.

S6.6.2 Test pieces: The test pieces shall be flat samples measuring 300 x 300 mm (11.81 x 11.81 in), which have been specially made or cut from the flattest part of three windshields or three panes, as the case may be, one edge of which corresponds to the upper edge of the glazing.

S6.7 *Resistance to radiation test.*

S6.7.1 Apparatus.

S6.7.1.1 Radiation source consisting of a medium-pressure mercury-vapor arc lamp with a tubular quartz bulb of ozone-free type; the bulb axis shall be vertical. The nominal dimensions of the lamp shall be 360 mm (13.78 in) in length by 9.5 mm (0.37 in) in diameter. The arc length shall be 300 ± 4 mm (11.81 ± 0.16 in). The lamp shall be operated at 750 ± 50 W.

S6.7.1.2 Power-supply transformer and capacitor capable of supplying to the lamp specified in paragraph S6.7.1.1. a starting peak voltage of 1,100 V minimum and an operating voltage of 500 ± 50 V.

S6.7.1.3 Device for mounting and rotating the test pieces at 1 to 5 rev/min about the centrally-located radiation source in order to ensure even exposure.

S6.7.2 Procedure.

S6.7.2.1 Check the regular light transmittance, determined according to paragraph S6.10, of three test pieces before exposure. Protect a portion of each test piece from the radiation, and then place the test pieces in the test apparatus 230 mm (9.06 in) from and parallel lengthwise to the lamp axis. Maintain the temperature of the test pieces at 45 ± 5 °C (113 ± 9 °F) throughout the test.

6.7.2.2 That face of the test piece which would constitute the outer face of the glazing shall face the lamp.

S6.7.2.3 The exposure time shall be 100 hours. Each test piece shall be subjected to radiation such that the radiation on each point of the test piece produces, on the interlayer, the same effect as that which would be produced by solar radiation of 1,400 W/m² for 100 hours.

S6.7.2.4 After exposure, measure the regular light transmittance again in the exposed area of each test piece.

S6.7.3 Test pieces: The test pieces shall be flat samples measuring 76 x 300 mm (2.99 x 11.81 in) or 300 x 300 mm (11.81 x 11.81 in), which have been specially made or cut from three windshields or three panes, as the case may be, one edge of which corresponds to the upper edge of the glazing.

S6.8 *Resistance to humidity test.*

S6.8.1 Procedure.

S6.8.1.1 Keep samples in a vertical position for two weeks in a closed container in which the temperature is maintained at 50 ± 2 °C (122 ± 3.5 °F) and the relative humidity at 95 ± 4 per cent.

S6.8.1.2 If several test pieces are tested at the same time, spacing shall be provided between them.

S6.8.1.3 Precautions shall be taken to prevent condensate from the walls or ceiling of the test chamber from falling on the test pieces.

S6.8.1.4 Before assessment, laminated-glass test pieces shall have been maintained for two hours in the conditions specified in paragraph S6.1.

S6.8.1.5 Before assessment, test pieces of glass faced with plastic and of glass-plastics shall have been

maintained for 48 hours in the conditions specified in paragraph S6.1.

S6.8.2 Test pieces: The test pieces shall be samples measuring 300 x 300 mm (11.81 x 11.81 in), which have been specially made or cut from three windshields or three panes, as the case may be. One edge at least shall correspond to an edge of the glazing.

S6.9 *Resistance to temperature changes test.*

S6.9.1 Procedure.

S6.9.1.1 Test pieces shall be placed in an enclosure at a temperature of −40 ± 5 °C (−40 ± 9 °F) for a period of 6 hours; they shall then be placed in the open air at a temperature of 23 ± 2°C (73.4 ± 3.5 °F) for one hour or until temperature equilibrium has been reached by the test pieces.

S6.9.1.2 Test pieces shall then be placed in circulating air at a temperature of + 72 ± 2 °C (161.6 ± 3.5 °F) for 3 hours.

S6.9.1.3 After being placed again in the open air at + 23 ± 2 °C (73.4 ± 3.5 °F) and cooled to that temperature, the test pieces shall be examined.

S6.9.2 Test pieces: The test pieces shall be flat samples measuring 300 x 300 mm (11.81 x 11.81 in), which have been specially made or cut from three windshields or panes, as appropriate.

S6.10 *Light transmittance test.*

S6.10.1 Apparatus

S6.10.1.1 Light source shall consist of the light source specified in paragraph S6.5.1.3.

S6.10.1.2 Measuring equipment.

S6.10.1.2.1 The receiver shall have a relative spectral sensitivity with the relative spectral luminous efficiency for the International Commission on Illumination standard photometric observer for photopic vision as defined in CIE S010/E:2004 Photometry—The CIE System of Physical Photometry (incorporated by reference, see § 571.5). The sensitive surface of the receiver shall be covered with a diffusing medium and shall have at least twice the cross-section of the light beam emitted by the optical system. If an integrating sphere is used, the aperture of the sphere shall have a cross-sectional area at least twice that of the parallel portion of the beam.

S6.10.1.2.2 The linearity of the receiver and the associated indicating instrument shall be within 2 percent of the effective part of the scale.

S6.10.1.2.3 The receiver shall be centered on the axis of the light beam.

S6.10.2 Procedure.

S6.10.2.1 The sensitivity of the measuring system shall be adjusted in such a way that the instrument indicating the response of the receiver indicates 100 divisions when the safety glazing material is not inserted in the light path. When no light is falling on the receiver, the instrument shall read zero.

S6.10.2.2 Place the glazing at a distance from the receiver equal to five times the diameter of the receiver. Insert the glazing between the diaphragm and the receiver and adjust its orientation in such a way that the angle of incidence of the light beam is equal to 0 ± 5 degrees. The regular light transmittance shall be measured on the glazing, and for every point measured the number of divisions, n, shown on the indicating instrument, shall be read. The regular transmittance τ_r is equal to n/100.

S6.10.3 Test pieces.

S6.10.3.1 Test pieces shall be either flat samples or finished products.

S6.10.3.2 In the case of windshields, the test area shall be as defined in paragraph S6.15.3.4.

S6.11 *Optical distortion test.*

S6.11.1 Apparatus.

The apparatus shall comprise the following items, arranged as shown in Figure 4.

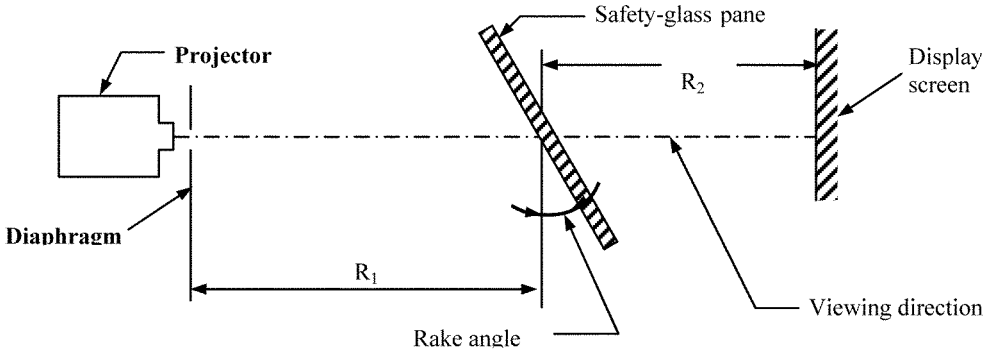

R_1 = 4 m (13.12 ft)
R_2 = 2 to 4 m (4 m preferred)

Figure 4: Arrangement of the apparatus for the optical distortion test

S6.11.1.1 Projector with a high-intensity point light source, having the following characteristics:

(a) Focal length at least 90 mm (3.54 in).

(b) Aperture 1/2.5.

(c)150 W quartz halogen lamp (if used without a filter).

(d) 250 W quartz halogen lamp (if a green filter is used).

(e) The projector is shown schematically in Figure 5. A diaphragm of 8 mm (0.31 in) in diameter is positioned 10 mm (0.39 in) from the front lens.

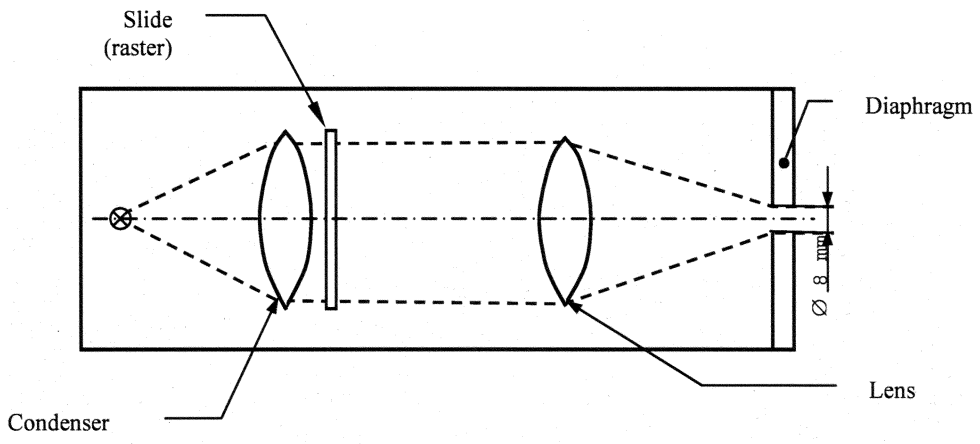

Figure 5: Optical arrangement of the projector

S6.11.1.2 Slides (rasters) consisting, for example, of an array of bright circular shapes on a dark background (see Figure 6). The slides shall be of sufficiently high quality and contrast to enable measurement to be carried out with an error of less than 5 percent. In the absence of the glazing to be examined, the dimensions of the circular shapes shall be such that when the circular shapes are projected they form an array of circles of diameter

$$\frac{R_1 + R_2}{R_1} \cdot \Delta x$$, where Δx = 4 mm (0.16 in) (Figures 4 and 7).

BILLING CODE 4910–59–P

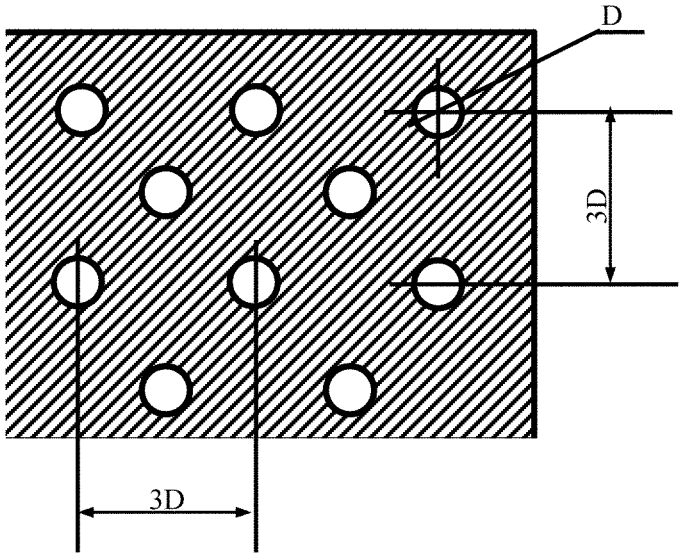

Figure 6: Enlarged section of the slide

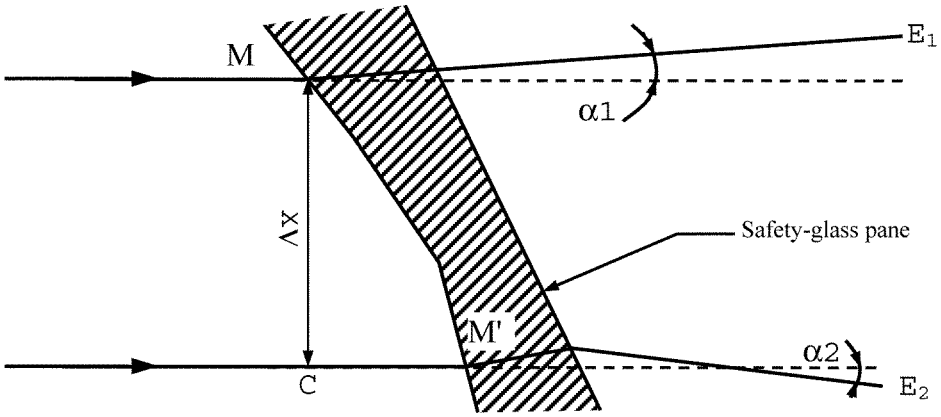

Figure 7: Diagrammatic representation of optical distortion

Notes: $\Delta\alpha = \alpha 1 - \alpha 2$, i.e. the optical distortion in the direction M-M'.
$\Delta x = MC$, i.e. the distance between two straight lines parallel to the direction of vision and passing through the points M and M'.

BILLING CODE 4910–59–C

S6.11.1.3 Support stand, permitting vertical and horizontal scanning, rotation of the windshield, and mounting of the windshield at a full range of installation angles of inclination.

S6.11.1.4 Checking template, for measuring changes in dimensions. A suitable design is shown in Figure 8.

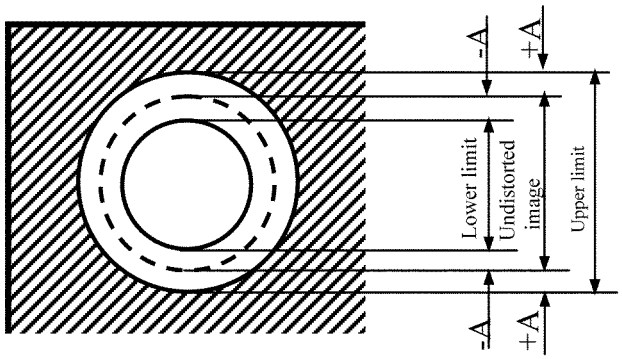

Figure 8: Design for a Suitable Checking Template

S6.11.2 Procedure.

S6.11.2.1 General.

S6.11.2.1.1 Mount the windshield on the support stand at the designed angle of inclination.

S6.11.2.1.2 Project the test image through the area being examined.

S6.11.2.1.3 Rotate the windshield or move it either horizontally or vertically in order to examine the whole of the specified area.

S6.11.2.1.4 The distance Δx shall be 4 mm (0.16 in).

S6.11.2.1.5 The projection axis in the horizontal plane shall be maintained approximately normal to the trace of the windshield in that plane.

S6.11.2.2 Calculate the value of A (Figure 8) from the limit value $\Delta\alpha_L$ for the change in deviation and the value of R_2, the distance from the windshield to the display screen: $A = 0.145\ \Delta\alpha_L \cdot R_2$

The relationship between the change in diameter of the projected image Δd and the change in angular deviation Δa is given by $\Delta d = 0.29\ \Delta\alpha \cdot R_2$,
where:

Δd is in millimeters;
A is in millimeters;
$\Delta\alpha_L$ is in minutes of arc;
$\Delta\alpha$ is in minutes of arc;
R_2 is in meters.

S6.11.3 Expression of results: evaluate the optical distortion of the windshield by measuring Δd at any point of the surface and in all directions in order to find Δd max.

S6.11.4 Alternative method: A strioscopic technique is permitted as an alternative to the projection techniques, provided that the accuracy of the measurements given in paragraph S6.12.2.2 is maintained.

S6.11.5 Test pieces: The test pieces shall be windshields.

S6.12 *Secondary image separation test.*

S6.12.1 Target test.

S6.12.1.1 Apparatus.

S6.12.1.1.1 The target shall be of one of the following types:

(a) an illuminated 'ring' target whose outer diameter, D, subtends an angle of η minutes of arc at a point situated at x meters (Figure 9 (a)), or

(b) an illuminated ''ring and spot'' target whose dimensions are such that the distance, D, from a point on the edge of the spot to the nearest point on the inside of the circle subtends an angle of η minutes of arc at a point situated at x meters (Figure 9 (b)), where:

(1) η is the limit value of secondary-image separation,

(2) x is the distance from the safety-glass pane to the target (not less than 7 m),

(3) D is given by the formula: $D = x \cdot \mathrm{tg}\ \eta$

S6.12.1.1.2 The illuminated target consists of a light box, 300 mm × 300 mm × 150 mm (11.81 in × 11.81 in × 5.91 in).

S6.12.1.2 Procedure.

S6.12.1.2.1 Mount the safety-glass pane at the angle of inclination on a suitable stand in such a way that the observation is carried out in the horizontal plane passing through the center of the target.

S6.12.1.2.2 The light box shall be viewed, in a dark or semi-dark room, through each part of the area being examined, in order to detect the presence of any secondary image associated with the illuminated target.

S6.12.1.2.3 Rotate the windshield as necessary to ensure that the correct direction of view is maintained. A monocular may be used for viewing.

S6.12.1.3 Expression of results. Determine whether:

S6.12.1.3.1 When target (a) (Figure 9 (a)) is used, the primary and secondary images of the circle separate, i.e., whether the limit value of η is exceeded, or

S6.12.1.3.2 When target (b) (Figure 9 (b)) is used, the secondary image of the spot shifts beyond the point of tangency with the inside edge of the circle, i.e. whether the limit value of η is exceeded.

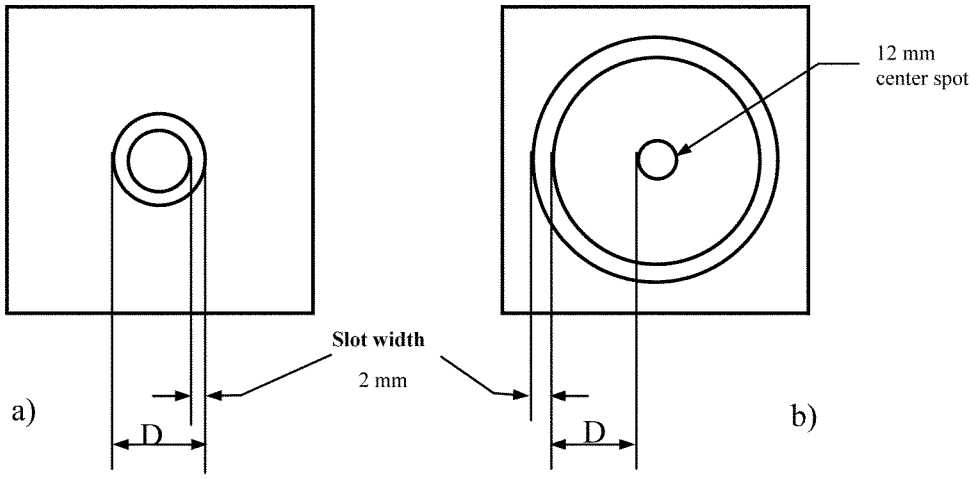

Figure 9: Dimensions of targets

S6.12.2 Alternative collimation-telescope test.

S6.12.2.1 Apparatus: The apparatus comprises a collimator and a telescope and may be set up in accordance with Figure 10.

S6.12.2.2 Procedure.

S6.12.2.2.1 The collimation telescope forms at infinity the image of a polar co-ordinate system with a bright point at its center (Figure 11).

S6.12.2.2.2 In the focal plane of the observation telescope, a small opaque spot with a diameter slightly larger than that of the projected bright point is placed on the optical axis, thus obscuring the bright point.

S6.12.2.2.3 When a test piece which exhibits a secondary image is placed between the telescope and the collimator, a second, less bright point appears at a certain distance from the center of the polar co-ordinate system. The secondary-image separation can be read out as the distance between the points seen through the observation telescope (Figure 11).

S6.12.2.2.4 The distance between the dark spot and the bright point at the center of the polar co-ordinate system represents the optical deviation.

S6.12.2.2.5 The direction of observation in the horizontal plane shall be maintained approximately normal to the trace of the windshield in that plane.

S6.12.2.3 Expression of results: The windshield shall first be examined by a simple scanning technique to establish the area giving the strongest secondary image. That area shall then be examined by the collimator-telescope system at the appropriate angle of incidence. The maximum secondary-image separation shall be measured.

BILLING CODE 4910–59–P

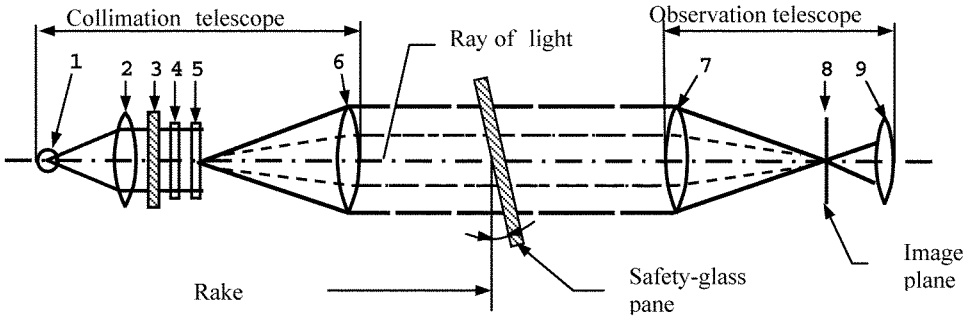

(1) Lamp bulb
(2) Condenser aperture > 8.6 mm (0.34 in)
(3) Ground-glass screen aperture > condenser aperture
(4) Color filter with central hole approximately 0.3 mm (0.012 in) in diameter, diameter > 8.6 mm (0.34 in)
(5) Polar co-ordinate plate, diameter > 8.6 mm (0.34 in)
(6) Achromatic lens, f ≥ 86 mm (3.39 in), aperture 10 mm (0.93 in)
(7) Achromatic lens, f ≥ 86 mm (3.39 in), aperture 10 mm (0.93 in)
(8) Black spot, diameter approximately 0.3 mm (0.012 in)
(9) Achromatic lens, f = 20 mm (0.79 in), aperture < 10 mm (0.93 in).

Figure 10: Apparatus for collimation-telescope test

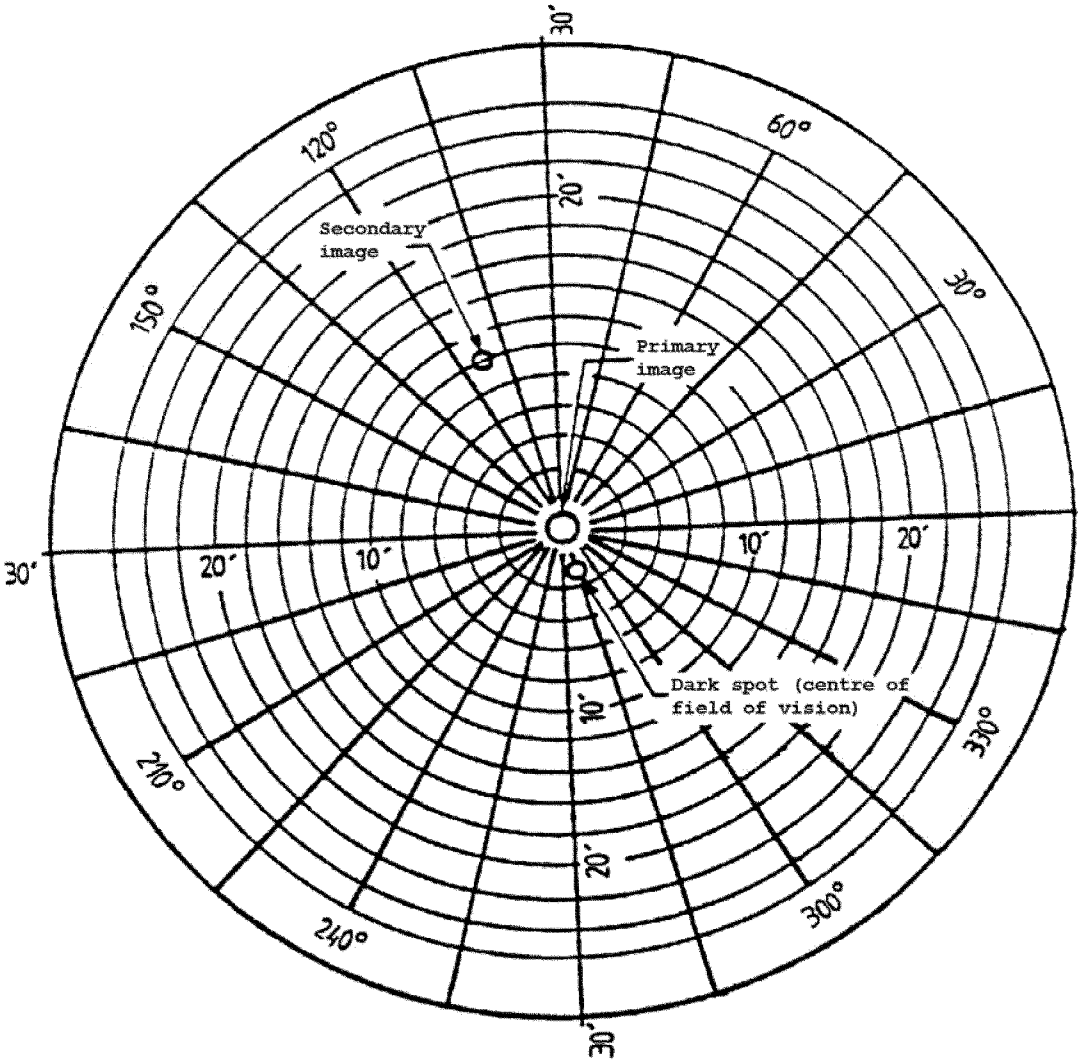

Figure 11: Example of observation by the collimation-telescope test method

S6.12.4 Test pieces: The test pieces shall be windshields.

S6.13 *Fire resistance test procedure.*

S6.13.1 Apparatus.

S6.13.1.1 Combustion chamber.

S6.13.1.1.1 The combustion chamber is illustrated by Figure 12, having the dimensions given in Figure 13.

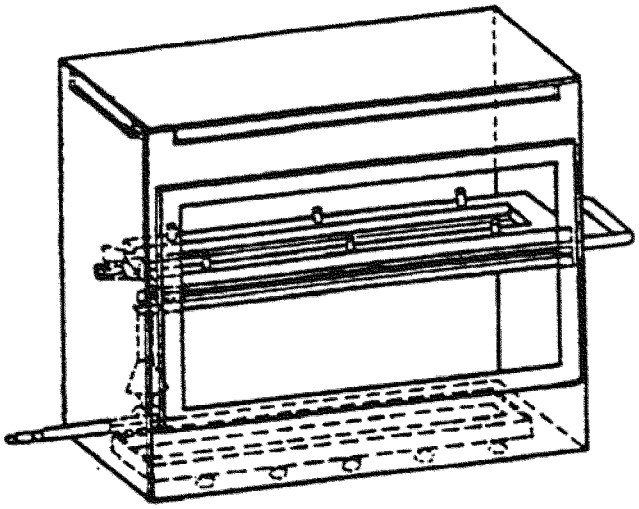

Figure 12: Example of Combustion Chamber with Sample Holder and Drip Pan

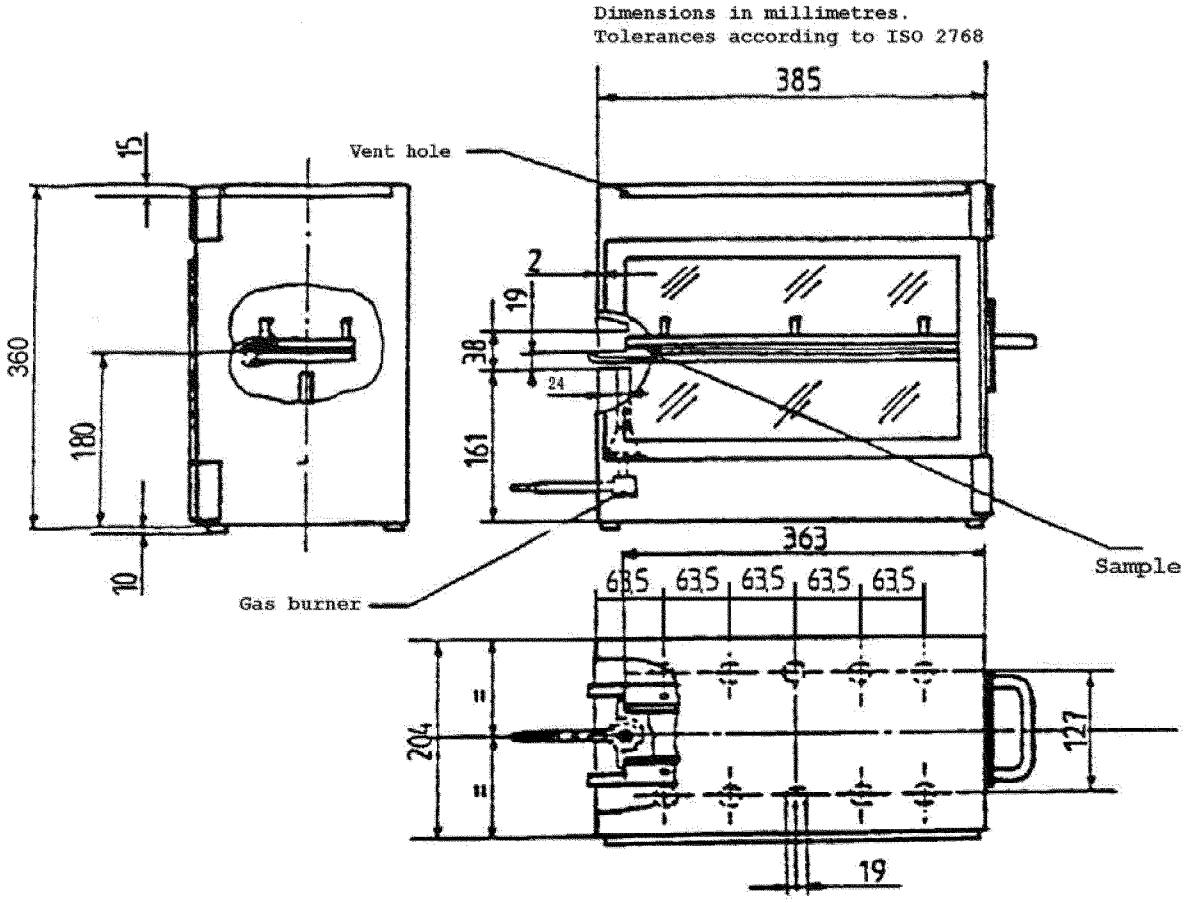

Figure 13: Example of Combustion Chamber
(Tolerance according to ISO 2768:1989, General Tolerances – Part 1: Tolerances for linear and angular dimensions without individual tolerance indications)
(incorporated by reference, see § 571.5)

S6.13.1.1.2 The combustion chamber is constructed of stainless steel.

S6.13.1.1.3 The front of the chamber contains a flame-resistant observation window, which may cover the entire front and which can be constructed as an access panel.

S6.13.1.1.4 The bottom of the chamber has vent holes, and the top has a vent slot all around.

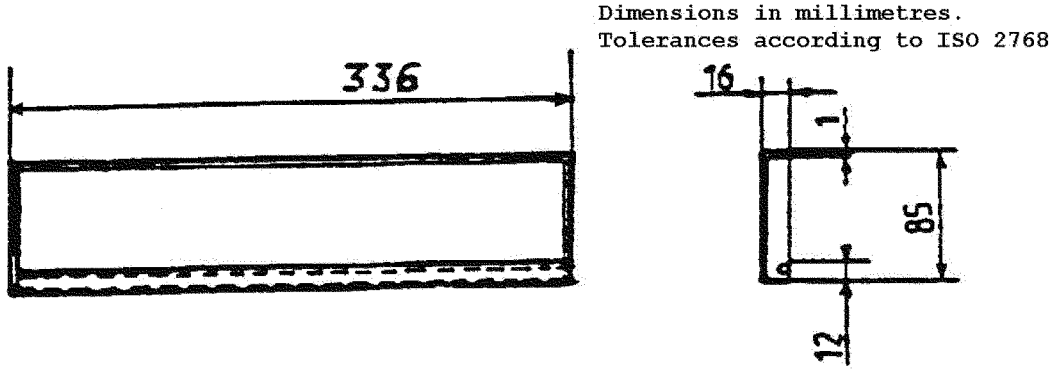

Figure 14: Typical drip pan
(Tolerance according to ISO 2768:1989, General Tolerances – Part 1: Tolerances for linear and angular dimensions without individual tolerance indications)
(incorporated by reference, see § 571.5)

S6.13.1.2 Sample holder.

S6.13.1.2.1 The sample holder consists of two U-shaped metal plates or frames of corrosion-proof material. Dimensions are given in Figure 15.

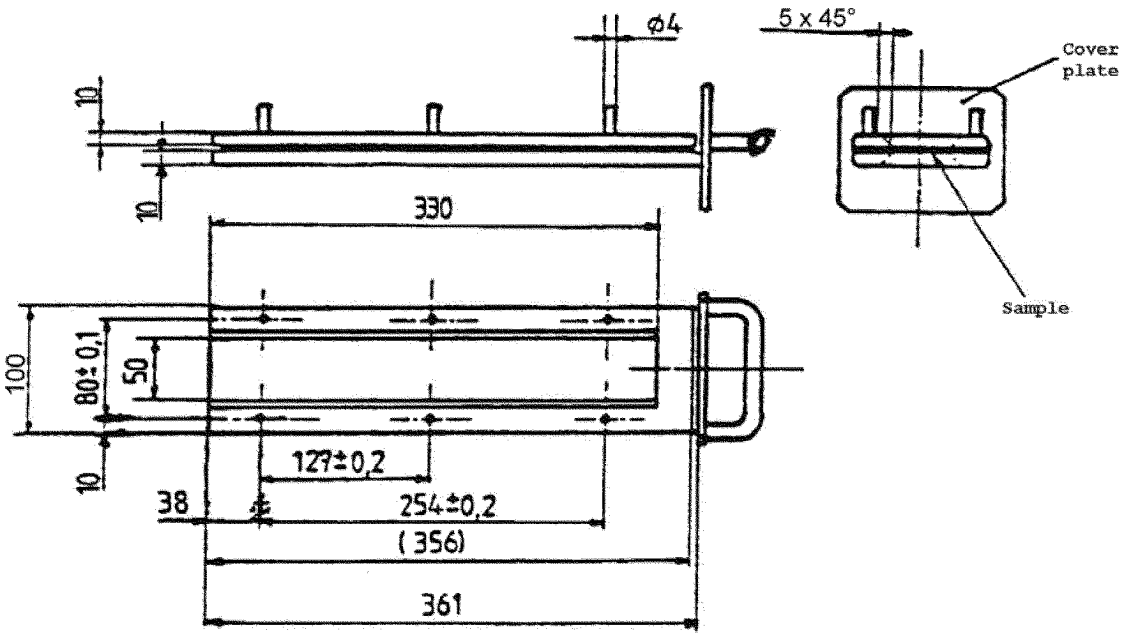

Figure 15: Example of sample holder

S6.13.1.2.2 The lower plate is equipped with pins and the upper one with corresponding holes, in order to ensure a consistent holding of the sample. The pins also serve as measuring points at the beginning and end of the burning distance.

S6.13.1.2.3 A support shall be provided in the form of heat-resistant wires 0.25 mm (0.01 in) in diameter spanning the frame at 25 mm (0.94 in) intervals over the bottom U-shaped frame (Figure 16).

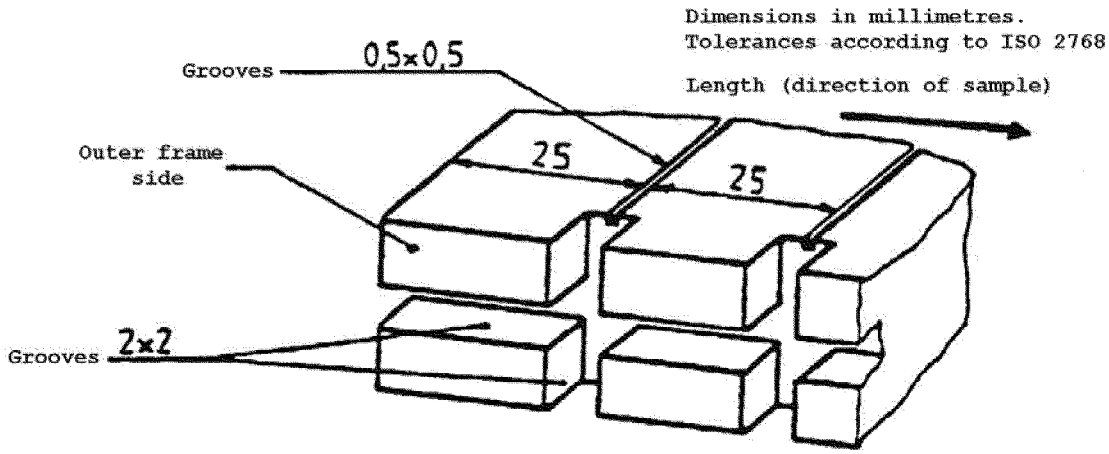

Figure 16: Example of section of lower U-frame design for wire support facility
(Tolerance according to ISO 2768:1989, General Tolerances – Part 1: Tolerances for linear and angular dimensions without individual tolerance indications)
(incorporated by reference, see § 571.5)

S6.13.1.2.4 The plane of the lower side of samples shall be 178 mm (7.01 in) above the floor plate. The distance of the front edge of the sample holder from the end of the chamber shall be 22 mm (0.87 in); the distance of the longitudinal sides of the sample holder from the sides of the chamber shall be 50 mm (1.97 in) (all inside dimensions). (Figures 12 and 13.)

S6.13.1.3 Gas burner. The small ignition source is provided by a Bunsen burner having an inside diameter of 9.5 mm (0.37 in). It is so located in the test cabinet that the center of its nozzle is 19 mm (0.75 in) below the center of the bottom edge of the open end of the sample (Figure 13).

S6.13.1.4 Test gas. The gas supplied to the burner shall have a calorific value of about 38 MJ/m^3 (for example natural gas).

S6.13.1.5 Fume cupboard.

S6.13.1.5.1 The combustion chamber may be placed in a fume-cupboard assembly provided that the latter internal volume is at least 20 times, but not more than 110 times greater than the volume of the combustion chamber and provided that no single height, width, or length dimension of the fume cupboard is greater than 2.5 times either of the other two dimensions.

S6.13.1.5.2 Before the test, the vertical velocity of the air through the fume cupboard shall be measured 100 mm (3.94 in) forward of and to the rear of the ultimate site of the combustion chamber. It shall be between 0.10 and 0.30 m/s (0.33 and 0.98 ft/s).

S6.13.2 Procedure.

S6.13.2.1 Place the sample in the sample holder described in paragraph S6.13.1.2.1 so that the inner side faces downwards, towards the flame.

S6.13.2.2 Adjust the gas flame to a height of 38 mm (1.49 in) using the mark in the chamber, the air intake of the burner being closed. The flame shall burn for at least one minute, for stabilization, before the first test is started.

S6.13.2.3 Push the sample holder into the combustion chamber so that the end of the sample is exposed to the flame, and after 15 seconds cut off the gas flow.

S6.13.2.4 Measurement of burning time starts at the moment when the foot of the flame passes the first measuring point. Observe the flame propagation on the side (upper or lower) whichever burns faster.

S6.13.2.5 Measurement of burning time is completed when the flame has come to the last measuring point or when the flame is extinguished before reaching that point. If the flame does not reach the last measuring point, measure the burnt distance up to the point where the flame was extinguished. Burnt distance is the part of the sample destroyed, on the surface or inside, by burning.

S6.13.2.6 If the sample does not ignite or does not continue burning after the burner has been extinguished, or the flame goes out before reaching the first measuring point, so that no burning time is measured, note in the test report that the burning rate is 0 mm/min.

S6.13.2.7 When running a series of tests or performing repeat tests, make sure before starting a test that the temperature of the combustion chamber and sample holder does not exceed 30 °C (86 °F).

S6.13.2.8 Calculation. The burning rate B, in millimeters per minute, is given by the formula:

$$B = s/t \cdot 60;$$

where:

s is the burnt distance, in millimeters,
t is the time in seconds, taken to burn the distance s.

S6.13.3 Test pieces.

S6.13.3.1 Shape and dimensions.

S6.13.3.1.1 The shape and dimensions of samples are given in Figure 17. The thickness of the sample corresponds to the thickness of the product to be tested. It shall not be more than 13 mm (0.51 in). When sample-taking so permits, the sample shall have a constant section over its entire length.

Dimensions in millimeters

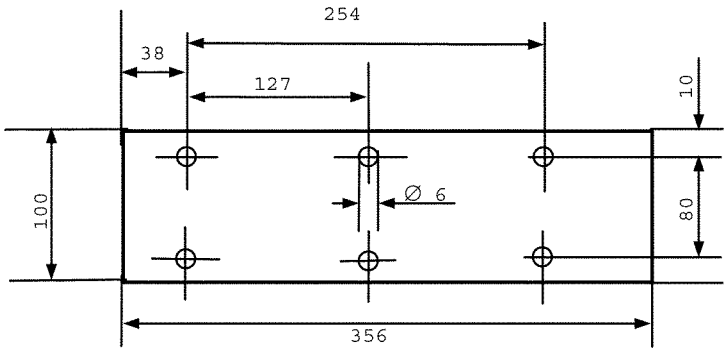

Figure 17: Sample

S6.13.3.1.2 When the shape and dimensions of a product do not permit taking a sample of the given size, the following minimum dimensions shall be observed:

(a) For samples having a width of 3 to 60 mm (0.12 to 2.36 in), the length shall be 356 mm (14.02 in). In this case the material is tested over the product width;

(b) For samples having a width of 60 to 100 mm (2.36 to 3.94 in), the length shall be at least 138 mm (5.43 in). In this case the potential burning distance corresponds to the length of the sample, the measurement starting at the first measuring point;

(c) Samples less than 60 mm (2.36 in) wide and less than 356 mm (14.02 in) long, and samples 60 to 100 mm (2.36 to 3.94 in) wide and less than 138 mm (5.43 in) long, cannot be tested according to the present method, nor can samples less than 3 mm (0.12 in) wide.

S6.13.3.2 Sampling.

S6.13.3.2.1 Five samples shall be taken from the material under test. In materials having burning rates differing according to the direction of the material (this being established by preliminary tests) the five samples shall be taken and be placed in the test apparatus in such a way that the highest burning rate will be measured.

S6.13.3.2.2 When the material is supplied in set widths, a length of at least 500 mm (19.68 in) covering the entire width shall be cut. From the piece so cut, the samples shall be taken at not less than 100 mm (3.94 in) from the edge of the material and at points equidistant from each other.

S6.13.3.2.3 Samples shall be taken in the same way from finished products when the shape of the product so permits. If the thickness of the product is over 13 mm (0.51 in) it shall be reduced to 13 mm (0.51 in) by a mechanical process applied to the side which does not face the passenger compartment.

S6.13.3.2.4 Composite materials shall be tested as if they were homogeneous.

S6.13.3.2.5 In the case of materials comprising superimposed layers of different composition which are not composite materials, all the layers of material included within a depth of 13 mm from the surface facing towards the passenger compartment shall be tested individually

S6.14 *Resistance to chemicals test.*

S6.14.1 Chemicals used for the test.

S6.14.1.1 Non-abrasive soap solution: 1 per cent by mass of potassium oleate in deionized water;

S6.14.1.2 Window-cleaning solution: an aqueous solution of isopropanol and dipropylene glycol monomethyl ether in concentration between 5 and 10 per cent by mass each and ammonium hydroxide in concentration between 1 and 5 per cent by mass;

S6.14.1.3 Undiluted denatured alcohol: 1 part by volume methyl alcohol in 10 parts by volume ethyl alcohol;

S6.14.1.4 Gasoline or equivalent reference gasoline: a mixture of 50 percent by volume toluene, 30 percent by volume 2,2,4-trimethylpentane, 15 percent by volume 2,4,4-trimethyl-1-pentene, and 5 percent by volume ethyl alcohol. The composition of the gasoline used shall be recorded in the test report.

S6.14.1.5 Reference kerosene: a mixture of 50 percent by volume n-octane and 50 per cent by volume n-decane.

S6.14.2 Procedure.

S6.14.2.1 Immersion Test.

S6.14.2.1.1 Test pieces shall be tested with each of the chemicals specified in paragraph S6.14.1 above, using a new test piece for each test and each cleaning product.

S6.14.2.1.2 Before each test, test pieces shall be cleaned according to the manufacturer's instruction, then conditioned for 48 hours at the conditions specified in paragraph S6.1. These conditions shall be maintained throughout the tests.

S6.14.2.1.3 The test pieces shall be completely immersed in the test fluid and held for one minute, then removed and immediately wiped dry with a clean absorbent cotton cloth.

S6.14.3 Test pieces: The test pieces shall be flat samples measuring 180 x 25 mm (7.07 x 0.98 in).

S6.15 *Procedures for determining test areas on windshields of passenger cars, multipurpose passenger vehicles, buses and trucks 4,536 kg (10,000 lb) GVWR and less in relation to the ''V'' points, and buses and trucks over 4,536 kg (10,000 lb) GVWR in relation to the ''O'' point.*

S6.15.1 Position of the ''V'' points.

S6.15.1.1 The position of the ''V'' points in relation to the ''R'' point as indicated by the X, Y, and Z co-ordinates in the three-dimensional reference system, are shown in Tables II and III.

S6.15.1.2 The following table gives the basic co-ordinates for a design seat-back angle of 25°. The positive direction of the co-ordinates is shown in Figure 20.

TABLE TO S6.15.1.2

V Point	A	b	c(d)
V_1	68 mm (2.68 in)	−5 mm (−0.2 in).	665 mm (26.18 in)
V_2	68 mm (2.68 in)	−5 mm (−0.2 in).	589 mm (12.19 in)

S6.15.1.3 Correction for design seat-back angles other than 25 degrees.

S6.15.1.3.1 The following table shows the further corrections to be made to the X and Z co-ordinates of each ''V'' point when the design seat-back angle is not 25°. The positive direction of the co-ordinates is shown in Figure 20.

TABLE TO S6.15.1.3.1

Seat-back angle (in °)	Horizontal co-ordinates X mm (in)	Vertical co-ordinates Z mm (in)	Seat-back angle (in °)	Horizontal co-ordinates X mm (in)	Vertical co-ordinates Z mm (in)
5	−186 (−7.32)	28 (1.1)	23	−18 (−0.71)	5 (0.2)
6	−177 (−6.97)	27 (1.06)	24	−9 (−0.35)	3 (0.12)
7	−167 (−6.57)	27 (1.06)	25	0 (0)	0 (0)
8	−157 (−6.18)	27 (1.06)	26	9 (0.35)	−3 (−0.12)
9	−147 (−5.79)	26 (1.02)	27	17 (0.67)	−5 (−0.2)
10	− 137 (−5.39)	25 (0.98)	28	26 (1.02)	−8 (−0.31)
11	−128 (−5.04)	24 (0.94)	29	34 (1.34)	−11 (−0.43)
12	−118 (−4.65)	23 (0.91)	30	43 (1.7)	−14 (−0.55)
13	−109 (−4.29)	22 (0.87)	31	51 (2.01)	−18 (−0.71)
14	−99 (−3.9)	21 (0.83)	32	59 (2.32)	−21 (−0.83)
15	−90 (−3.54)	20 (0.79)	33	67 (2.64)	−24 (−0.94)
16	−81 (−3.19)	18 (0.71)	34	76 (3)	−28 (−1.1)
17	−72 (−2.83)	17 (0.67)	35	84 (3.31)	−32 (−1.26)
18	−62 (−2.44)	15 (0.59)	36	92 (3.62)	−35 (−1.38)
19	−53 (−2.09)	13 (0.51)	37	100 (3.93)	−39 (−1.54)
20	−44 (−1.73)	11 (0.43)	38	108 (4.25)	−43 (−1.69)
21	−35 (−1.38)	9 (0.35)	39	115 (4.53)	−48 (−1.89)
22	−26 (−1.02)	7 (0.28)	40	123 (4.84)	−52 (−2.05)

S6.15.2 Position of the ''O'' point.

S6.15.2.1 The eye-point ''O'' is the point located 625 mm (26.61 in) above the R-point in the vertical plane parallel to the longitudinal median plane of the vehicle for which the windshield is intended, passing through the axis of the steering wheel.

S6.15.3 *Test areas*

S6.15.3.1 The test areas shall be determined as follows:

S6.15.3.1.1 For optical distortion and image separation measurement:

(a) In case of passenger cars, multi-purpose passenger vehicles, buses and trucks under 4536 kg (10,000 lb) GVWR according to paragraph S6.15.3.2.

(b) In case of buses and trucks over 4536 kg (10,000 lb) GVWR vehicles according to paragraph S6.15.3.3.

S6.15.3.1.2 For the measurement of the light transmittance in the transparent area of the windshield according to paragraph S6.15.3.4.

S6.15.3.2 Determination of two test areas for passenger cars, multipurpose passenger cars, buses and trucks 4,536 kg (10,000 lb) GVWR and less vehicles using the ''V'' points.

S6.15.3.2.1 Test area A is the area on the outer surface of the windshield bounded by the following four planes extending forward from the ''V'' points (see Figure 18):

(a) A plane parallel to the Y axis passing through V_1 and inclined upwards at 3 degrees from the X axis (Figure 18, plane 1);

(b) A plane parallel to the Y axis passing through V_2 and inclined downwards at 1 degree from the X axis (Figure 18, plane 2);

(c) A vertical plane passing through V_1 and V_2 and inclined at 13 degrees to the left of the axis in the case of left-hand drive vehicles and to the right of the X axis in the case of right-hand drive vehicles (Figure 18, plane 3);

(d) A vertical plane passing through V_1 and V_2 and inclined at 20 degrees to the right of the X axis in the case of left-hand drive vehicles and to the left of the X axis in the case of right-hand drive vehicles (Figure 18, plane 4).

S6.15.3.2.2 The ''extended test area A'' is Zone A, extended to the median plane of the vehicle, and in the corresponding part of the windshield symmetrical to it about the longitudinal median plane of the vehicle, and also in the reduced test area B according to paragraph S6.15.3.2.4.

S6.15.3.2.3 Test area B is the area of the outer surface of the windshield bounded by the intersection of the following four planes (see Figure 19):

(a) A plane inclined upward from the X axis at 7 degrees, passing through V_1 and parallel to the Y axis (Figure 19, plane 5);

(b) A plane inclined downward from the X axis at 5 degrees, passing through V_2 and parallel to the Y axis (Figure 19, plane 6);

(c) A vertical plane passing through V1 and V2 and forming an angle of 17 degrees to the left of the X axis in the case of left-hand drive vehicles and to the right of the X axis in the case of right-hand drive vehicles (Figure 19, plane 7);

(d) A plane symmetrical with respect to the plane 7 in relation to the longitudinal median plane of the vehicle (Figure 19, plane 8).

S6.15.3.2.4 The ''reduced test area B'' is test area B with the exclusion of the following areas (taking into account the fact that the data points as defined under paragraph S6.15.3.2.5 shall be located in the transparent area, see Figures 19 and 20):

S6.15.3.2.4.1 The test area A defined under paragraph S6.15.3.2.1, extended according to paragraph S6.15.3.2.2.

S6.15.3.2.4.2 At the discretion of the vehicle manufacturer, one of the two following paragraphs may apply:

S6.15.3.2.4.2.1 Any opaque obscuration bounded downwards by plane 1, as defined in paragraph S6.15.3.2.1(a), and laterally by plane 4, as defined in paragraph S6.15.3.2.1(d), and its symmetrical in relation to the longitudinal median plane of the vehicle (see Figure 19(b), plane 4′);

S6.15.3.2.4.2.2 Any opaque obscuration bounded downwards by plane 1, provided it is inscribed in an area 300 mm (11.81 in) wide centered on the longitudinal median plane of the vehicle, and provided the opaque obscuration below the plane 5, as defined in paragraph S6.15.3.2.3(a), trace is inscribed in an area limited laterally by the traces of planes passing by the limits of a 150 mm (5.91 in) wide segment, measured on the outer surface of the windshield and on the trace of plane 1, as defined in paragraph S6.15.3.2.1(a), and parallel, respectively, to the traces of plane 4, as defined in paragraph S6.15.3.2.1(d), and plane 4′ (See Figure 19(b));

S6.15.3.2.4.3 Any opaque obscuration bounded by the intersection of the outer surface of the windshield:

(a) With a plane inclined downwards from the X axis at 4°, passing through V_2, and parallel to the Y axis (plane 9);

(b) With plane 6 as defined in paragraph S6.15.3.2.3(b);

(c) With planes 7, as defined in paragraph S6.15.3.2.3(c), and 8, as defined in paragraph S6.15.3.2.3(d) or the edge of the outer surface of the windshield if the intersection of plane 6, as defined in paragraph S6.15.3.2.3(b), with plane 7 (plane 6 with plane 8) does not cross the outer surface of the windshield;

S6.15.3.2.4.4 Any opaque obscuration bounded by the intersection of the outer surface of the windshield:

(a) With a horizontal plane passing through V_1 (plane 10);

(b) With plane 3, or for the other side of the windshield, with a symmetrical plane with respect to plane 3 in relation to the longitudinal median plane of the vehicle;

(c) With plane 7, as defined in paragraph S6.15.3.2.3(c), (for the other side of the windshield, with plane 8) or the edge of the outer surface of the windshield if the intersection of plane 6 as defined in paragraph S6.15.3.2.3(b), with plane 7 (plane 6 with plane 8) does not cross the outer surface of the windshield;

(d) With plane 9 as described in paragraph S6.15.3.2.4.3(a).

S6.15.3.2.4.5 Any opaque band situated within planes P3/P7 and P5/P10 respectively, that does not extend by more than 25 mm (0.98 in) from the edge of the design glass outline.

S6.15.3.2.4.6 An area within 25 mm (0.98) from the edge of the outer surface of the windshield or from any opaque obscuration. This area shall not impinge on the extended test area A.

S6.15.3.2.5 Definition of the data points (see Figure 20). The data points are points situated at the intersection with the outer surface of the windshield of lines radiating forward from the V points:

S6.15.3.2.5.1 upper vertical datum point forward of V_1 and 7 degrees above the horizontal (Pr1);

S6.15.3.2.5.2 lower vertical datum point forward of V_2 and 5 degrees below the horizontal (Pr2);

S6.15.3.2.5.3 horizontal datum point forward of V_1 and 17 degrees to the left (Pr3);

S6.15.3.2.5.4 three additional data points symmetrical to the points defined under paragraphs 6.15.3.2.5.1 to 6.15.3.2.5.3 in relation to the longitudinal median plane of the vehicle (respectively Pr′1, Pr′2, Pr′3).

BILLING CODE 4910–59–P

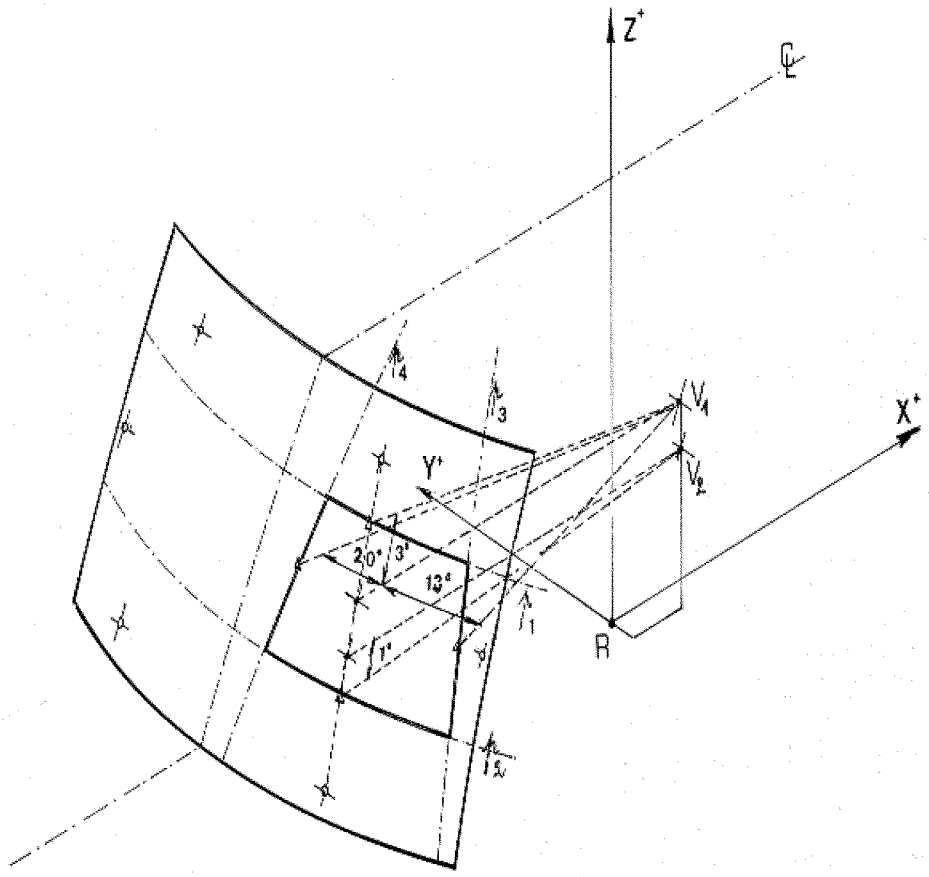

Figure 18: Test area "A"

C_L: trace of the longitudinal median plane of the vehicle
P_i: trace of the relevant plane (see text)

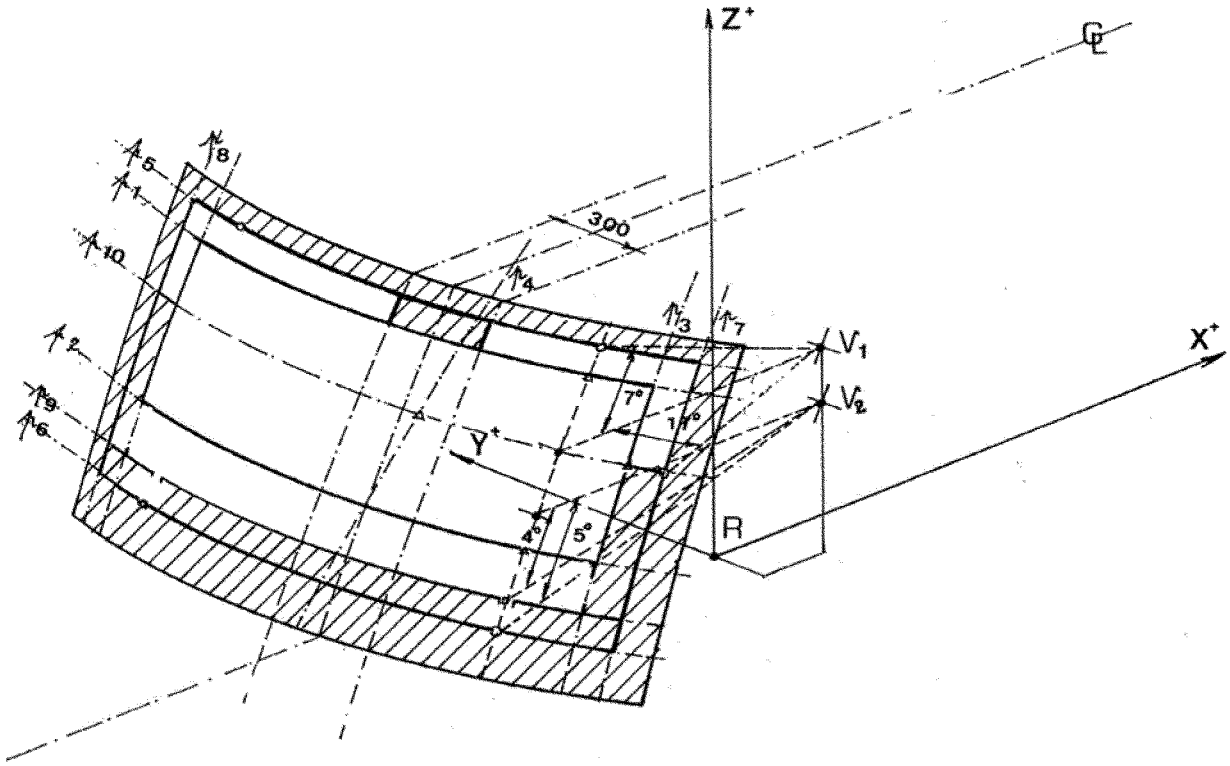

Figure 19(a): Reduced test area "B"
Upper obscuration area as defined in paragraph S6.15.3.2.4.2.2.

C_L:	trace of the longitudinal median plane of the vehicle
P_i:	trace of the relevant plane (see text)

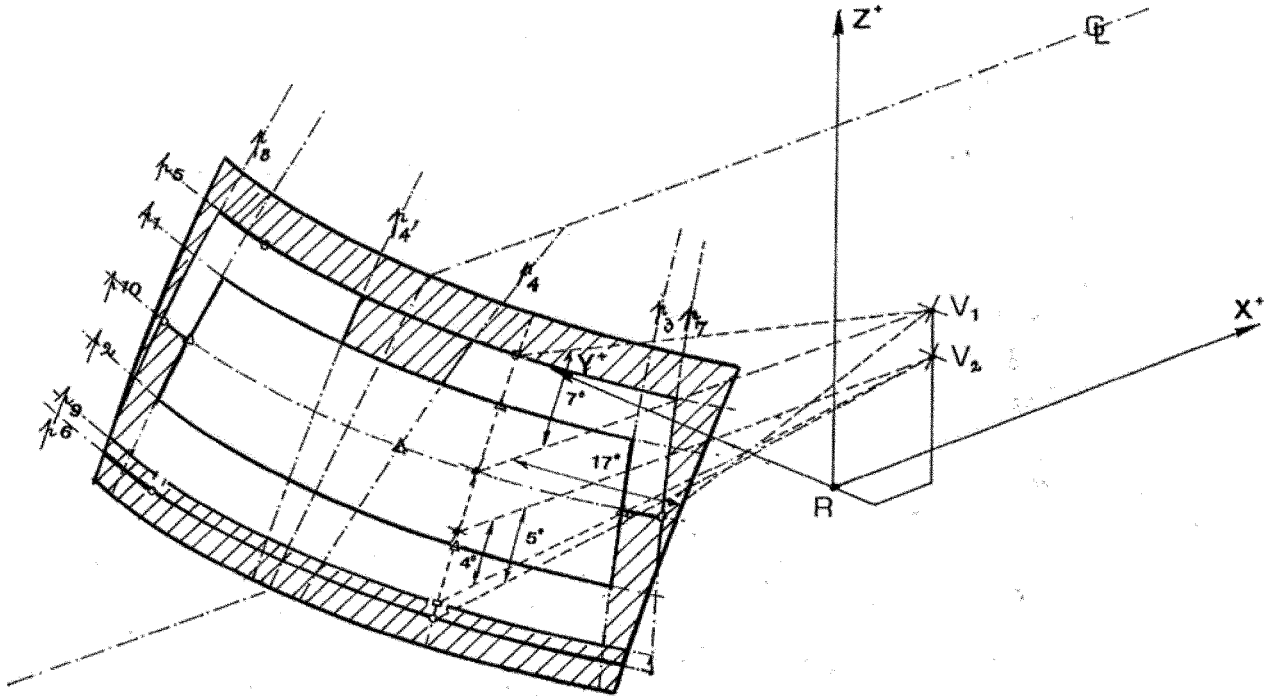

Figure 19(b): Reduced test area "B"
Upper obscuration area as defined in paragraph S6.15.3.2.4.2.1.

C_L:	trace of the longitudinal median plane of the vehicle
P_i:	trace of the relevant plane (see text)

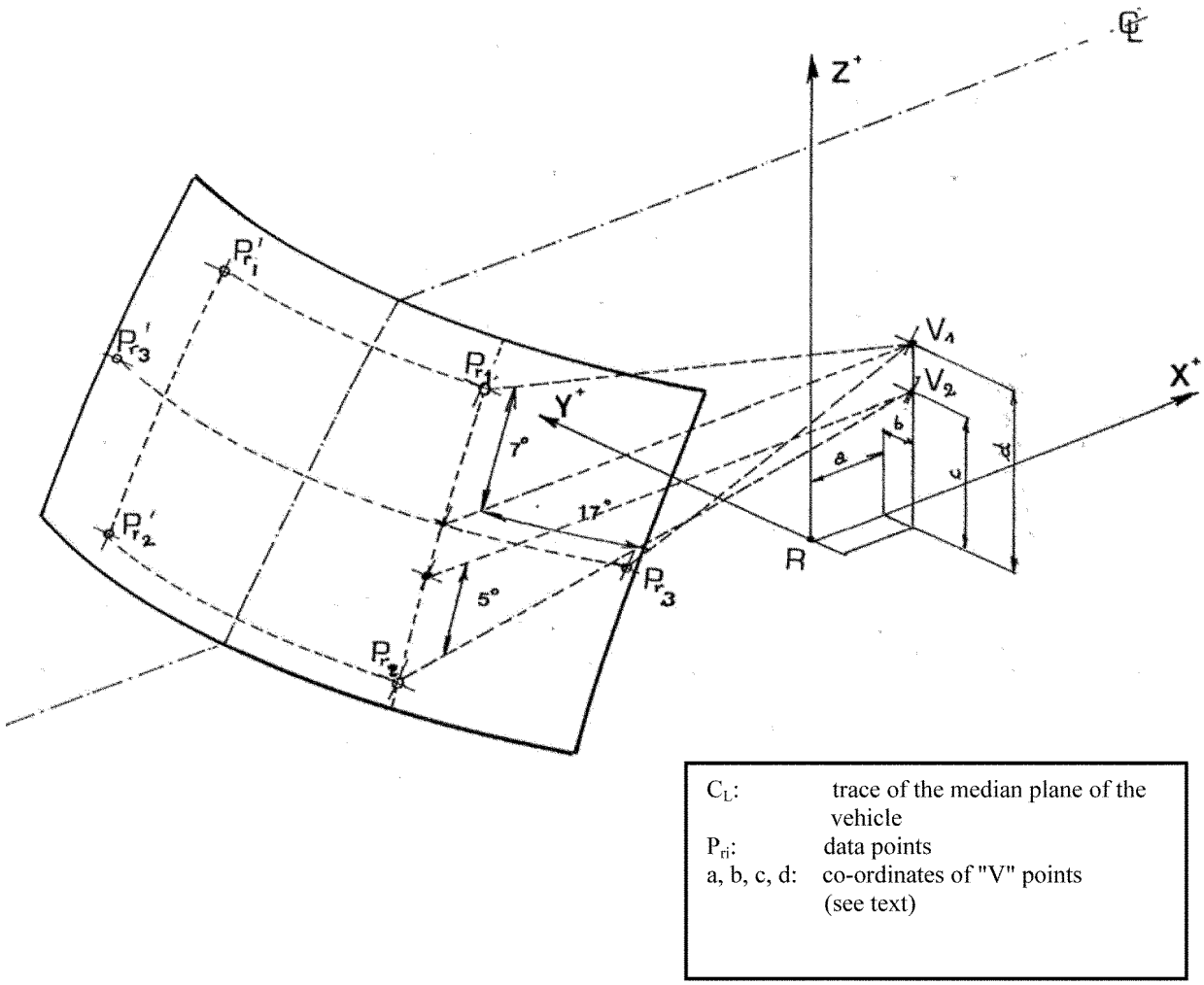

Figure 20: Determination of the data points

S6.15.3.3 *Determination of the Test Areas for buses and trucks over 4,536 kg (10,000 lb) GVWR using the ''O'' Point.*

S6.15.3.3.1 The straight line OQ which is the horizontal straight line passing through the eye point ''O'' and perpendicular to the median longitudinal plane of the vehicle.

S6.15.3.3.2 Zone I is the zone determined by the intersection of the windshield with the four planes defined below:

(a) P1: a vertical plane passing through 0 and forming an angle of 15 degrees to the left of the median longitudinal plane of the vehicle;

(b) P2: a vertical plane symmetrical to P1 about the median longitudinal plane of the vehicle. If this is not possible (in the absence of a symmetrical median longitudinal plane, for instance) P2 shall be the plane symmetrical to P1 about the longitudinal plane of the vehicle passing through point O.

(c) P3: a plane passing through a transverse horizontal line containing O and forming an angle of 10 degrees above the horizontal plane;

(d) P4: a plane passing through a transverse horizontal line containing O and forming an angle of 8 degrees below the horizontal plane.

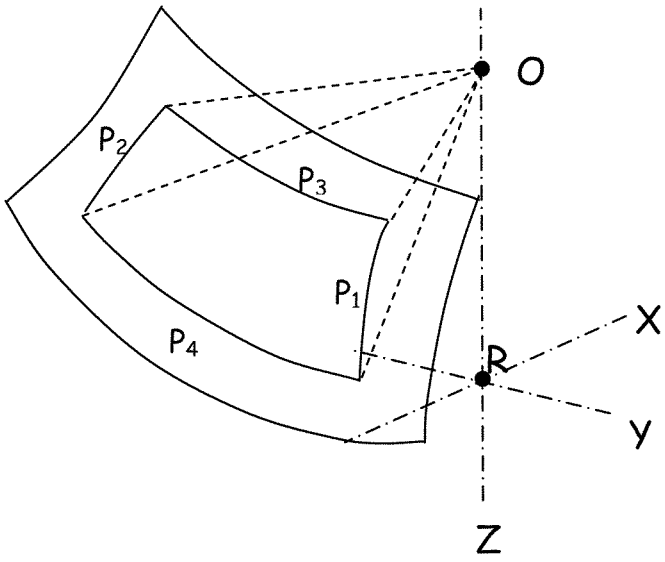

Figure 21: Determination of Zone I

S6.15.3.4 *Determination of the test area for light transmittance for all vehicle categories.* The test area for light transmittance is the transparent area, excluding any opaque obscuration and any shade band. For practical reasons relating to the method of mounting and means of installation, a windshield may incorporate an obscuration band which extends by not more than 25 mm (1 in) from the edge of the design glass outline. Additional opaque obscuration is also allowed in limited areas where a sensing device, e.g., a rain-drop detector or rear view mirror, will be bonded to the inner side of the windshield. The allowed areas where such devices may be applied are defined in paragraph S6.15.3.2.4.

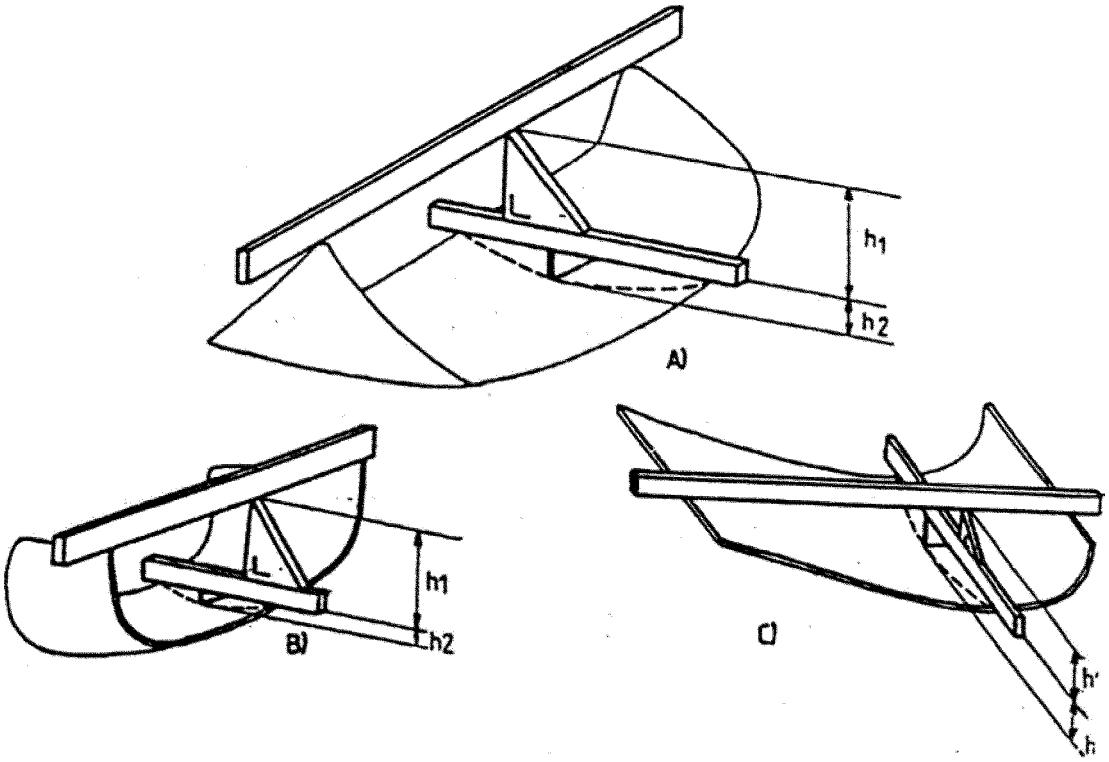

Figure 22: Determination of the height of segment "h"

S6.16 *Measurement of the height of segment and position of the points of impact.*

S6.16.1 In the case of glazing having a simple curvature, the height of segment will be equal to: h_1 maximum.

S6.16.2 In the case of glazing having a double curvature, the height of segment will be equal to: h_1 maximum + h_2 maximum.

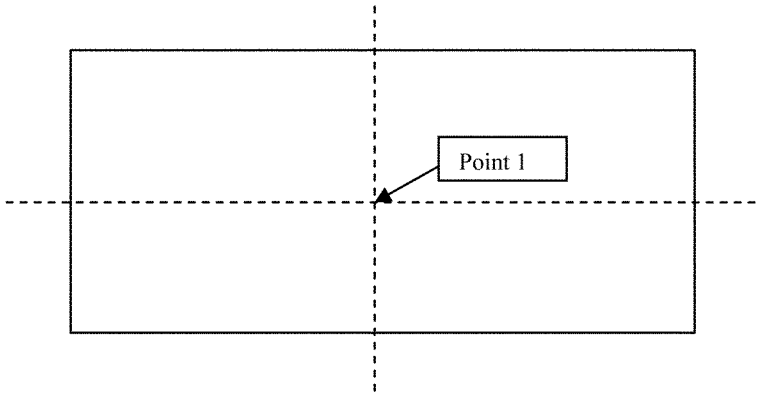

2(a) Flat glass pane

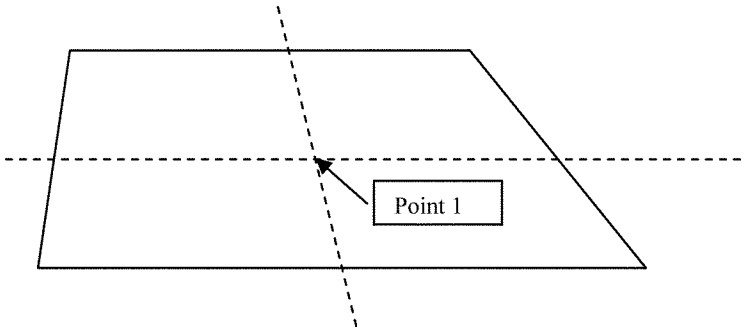

2(b) Flat glass pane

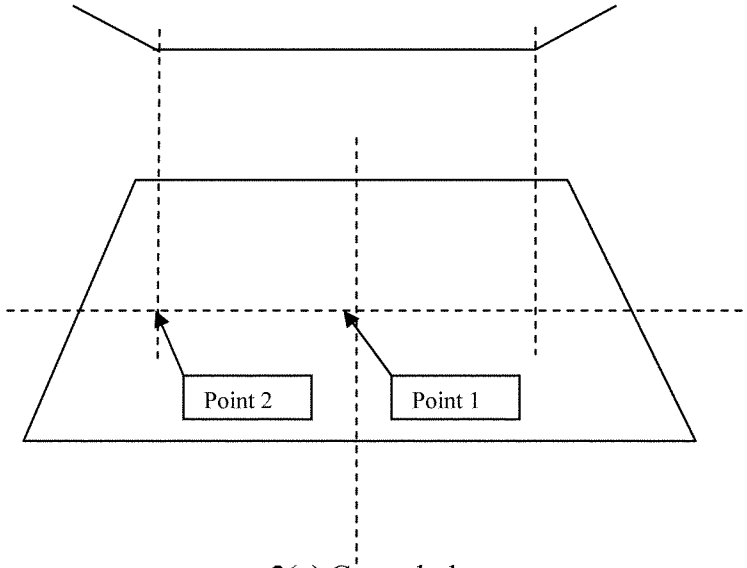

2(c) Curved glass pane

Figure 23: Prescribed points of impact for uniformly tempered glass panes

Issued on June 7, 2012.

Christopher J. Bonanti,

Associate Administrator for Rulemaking.

[FR Doc. 2012–14996 Filed 6–20–12; 8:45 am]

BILLING CODE 4910–59–C

FEDERAL REGISTER

Vol. 77 Thursday,

No. 120 June 21, 2012

Part III

Department of Commerce

Bureau of Industry and Security

15 CFR Parts 734, 736, 740, *et al.*

Proposed Revisions to the Export Administration Regulations: Implementation of Export Control Reform; Revisions to License Exceptions After Retrospective Regulatory Review; Proposed Rule

DEPARTMENT OF COMMERCE

Bureau of Industry and Security

15 CFR Parts 734, 736, 740, 742, 743, 744, 750, 758, 762, 764, 774

[Docket No. 120501427–2427–01]

RIN 0694–AF65

Proposed Revisions to the Export Administration Regulations: Implementation of Export Control Reform; Revisions to License Exceptions After Retrospective Regulatory Review

AGENCY: Bureau of Industry and Security, Commerce.

ACTION: Proposed rule.

SUMMARY: President Obama directed the Administration in August 2009 to conduct a broad-based review of the U.S. export control system in order to identify additional ways to enhance national security. Then-Secretary of Defense Gates described in April 2010 the initial results of that effort and why fundamental reform of the U.S. export control system is necessary to enhance national security. Since then, the Bureau of Industry and Security (BIS), Department of Commerce, and the Directorate of Defense Trade Controls (DDTC), Department of State, have published multiple proposed amendments to the Export Administration Regulations (EAR) and the International Traffic in Arms Regulations (ITAR), respectively, that would implement various aspects of what has become known as the Export Control Reform Initiative. One aspect of the reform effort would result in the transfer of control to the EAR of items the President determines no longer warrant control under ITAR, once congressional notification requirements and corresponding amendments to the ITAR and the EAR are completed. This proposed rule addresses issues pertaining to transition of control over such items. It complements the Export Control Transition Plan, a proposed policy statement and request for comments issued by DDTC.

This rule proposes to amend the EAR by, *inter alia,* establishing a General Order regarding continued use of State authorizations for a specified period, by broadening license exceptions in the EAR to make them consistent with ITAR exemptions, and by extending the validity period of Commerce licenses. Any modifications to License Exceptions specific to particular types of items, such as firearms, will be addressed in the proposed rules pertaining specifically to those items. This rule also addresses specific concerns raised in public comments on recent rules by proposing a revised *de minimis* rule for ''600 series'' items, *i.e.,* the items the President determines no longer warrant control on the USML and that would thus be controlled in the ''600 series'' of the EAR's Commerce Control List (CCL). Finally, this rule proposes additional conforming changes that are necessary to implement the Export Control Reform Initiative, but also would affect items currently subject to the EAR, such as changes to reporting thresholds for the Automated Export System.

In addition, this proposed rule addresses issues raised by the public in response to a notice requesting comments on the streamlining of BIS's regulations published on August 5, 2011 (76 FR 47527). On January 18, 2011, President Barack Obama issued Executive Order 13563, affirming general principles of regulation and directing government agencies to conduct retrospective reviews of existing regulations. Although the Export Control Reform Initiative did not originate with Executive Order 13563, it is entirely consistent in spirit and substance. BIS issued a notice soliciting public comment on streamlining its regulations pursuant to the President's Executive Order. In response to the public comments received on the notice, and consistent with BIS's internal analysis, this rule proposes revisions to license exceptions for government uses and temporary exports that streamline and update unduly complex or outmoded provisions in addition to broadening certain provisions to implement Export Control Reform. Other proposed changes to the EAR warranted by the Executive Order will be addressed in separate **Federal Register** notices. Commerce's full plan can be accessed at: *http://open.commerce.gov/news/2011/08/23/commerce-plan-retrospective-analysis-existing-rules.*

DATES: Comments must be received by BIS no later than August 6, 2012.

ADDRESSES: Comments may be submitted to the Federal rulemaking portal (*http://www.regulations.gov*). The regulations.gov ID for this notice of inquiry is: BIS–2012–0024. Comments may also be submitted via email to *publiccomments@bis.doc.gov* or on paper to Regulatory Policy Division, Bureau of Industry and Security, Room 2099B, U.S. Department of Commerce, Washington, DC 20230. Please refer to RIN 0694–AF65 in all comments and in the subject line of email comments. All comments must be in writing. All comments (including any personal identifiable information) will be available for public inspection and copying. Those wishing to comment anonymously may do so by submitting their comment via regulations.gov and leaving the fields for identifying information blank.

FOR FURTHER INFORMATION CONTACT: Hillary Hess or Timothy Mooney, Regulatory Policy Division, Office of Exporter Services, Bureau of Industry and Security at 202–482–2440 or *rpd2@bis.doc.gov.*

SUPPLEMENTARY INFORMATION:

Background

The Export Control Reform Initiative

The objective of the Export Control Reform Initiative is to protect and enhance U.S. national security interests. On July 15, 2011 (76 FR 41958), BIS published a proposed rule, *Proposed Revisions to the Export Administration Regulations (EAR): Control of Items the President Determines No Longer Warrant Control Under the United States Munitions List (USML).* The July 15 rule proposed a regulatory framework to control items on the USML that, in accordance with section 38(f) of the Arms Export Control Act (AECA) (22 U.S.C. 2778(f)(1)), the President determines no longer warrant control under the AECA. These items would be controlled under the Export Administration Regulations (EAR) once the congressional notification requirements of section 38(f) and corresponding amendments to the International Traffic in Arms Regulations (ITAR) (22 CFR parts 120–130) and its USML and the EAR and its Commerce Control List (CCL) are completed. After the July 15 rule established this regulatory framework, subsequent rules, including the November 7, 2011 (76 FR 68675) proposed rule, proposed specific changes to the USML and the CCL.

Once the ITAR and its USML are amended so that they control only the items that provide the United States with a critical military or intelligence advantage or otherwise warrant the controls of the ITAR, and the EAR is amended to control military items that do not warrant USML controls, the U.S. export control system will enhance national security by (i) improving interoperability of U.S. military forces with allied countries, (ii) strengthening the U.S. industrial base by, among other things, reducing incentives for foreign manufacturers to design out and avoid U.S.-origin content and services, and (iii) allowing export control officials to

focus government resources on transactions of more concern.

All references to the United States Munitions List (''USML'') in this rule are to the list of defense articles that are controlled for purposes of export or temporary import pursuant to the International Traffic in Arms Regulations (''ITAR''), 22 CFR Parts 120 et seq., and not to the list of defense articles on the USML that are controlled by the Bureau of Alcohol, Tobacco, Firearms and Explosives (ATF) for purpose of permanent import under its regulations at 27 CFR part 447. Pursuant to section 38(a)(1) of the Arms Export Control Act (AECA), all defense articles controlled for export or import are part of the ''USML'' under the AECA. For the sake of clarity, the list of defense articles controlled by ATF for purposes of permanent import are on the United States Munitions Import List (USMIL). The transfer of defense articles from the ITAR's USML to the EAR's CCL for purposes of export controls does not affect the list of defense articles controlled on the USMIL under the AECA for purposes of permanent import controls.

Public Comments on the July 15 and November 7 Proposed Rules

BIS received 43 comments in response to the July 15 proposed rule. Those who submitted comments generally supported the proposed amendments to the EAR and the Export Control Reform Initiative objectives. However, they also expressed both general concerns about the process of transition from State to Commerce jurisdiction and specific concerns regarding certain proposed provisions. With respect to general concerns regarding the transition, nine commenters addressed perceived burdens caused by implementation of Export Control Reform, specifically expressing concern over shorter validity periods for licenses under the EAR than the ITAR and difficulty complying with two sets of regulations in the same transaction. They urged incremental implementation, including grandfathering of ITAR licenses and continuing opportunities for public participation in the rulemaking process. Ten commenters found that certain ITAR exemptions were broader than EAR license exceptions. While these comments on implementation concerns were outside the scope of the July 15 rule, they did anticipate issues that BIS planned to address in this proposed rule. One commenter requested adoption of a single licensing form, which is outside the scope of this rule but nonetheless something the Administration has announced it is developing.

With respect to specific proposed provisions, fourteen commenters found the July 15 proposal regarding a revised *de minimis* rule for ''600 series'' items too complex and unworkable. Commenters stated that having a 10 percent *de minimis* rule for ''600 series'' items and a 25 percent *de minimis* rule for all other items subject to the EAR would be extremely burdensome, if not impossible, for the commenters to calculate.

Three commenters on the July 15 rule requested clarification regarding application of the China military end-use restriction to ''600 series'' items.

Similar to the July 15 rule, BIS received public comments regarding implementation concerns in response to the November 7 rule. Implementation concerns were generally outside the scope of the November 7 rule, which proposed CCL entries for aircraft and related items the President determines do not warrant control on the USML; however, five commenters raised the issue that certain ITAR exemptions were broader than comparable EAR license exceptions.

BIS plans to address comments received in response to the July 15 and November 7 proposed rules, to the extent that they are germane to this proposed rule, when this rule is published in final form.

The ''600 Series'' and U.S. Arms Embargoed Countries

As noted in the preamble to the July 15 rule, items determined to no longer warrant control under the ITAR would be controlled by a new series of ECCNs identified by the ''6'' at the third character of each ECCN and collectively referred to as ''600 series'' items. While these items no longer would be subject to the ITAR, they still would be military items or items ''specially designed'' for military uses. BIS is not suggesting by their inclusion on the CCL that they are ''dual-use'' items. The CCL controls ''dual use'' (*e.g.,* items designed for both military and civil applications), exclusively military, and other types of items warranting control. The amendments at issue in this part of the Export Control Reform Initiative would merely add significantly more military items to controls of the EAR. Applications to export such items to countries subject to U.S. arms embargoes as described in § 126.1 of the ITAR and subsequently in proposed § 740.2 (a)(12) of the EAR in the July 15 rule would be subject to the general policy of denial proposed in the November 7 rule. (An exception to this would be those items contained in the .y paragraph of each ''600 series'' ECCN; while they are military items, they are so militarily insignificant that licenses would not be required except for export to terrorist supporting countries or for a military end use in China.) Another general principle underlying the incorporation of the ''600 series'' into the EAR is that because items subject to the EAR are less militarily significant than those subject to the ITAR, EAR exceptions should not be more restrictive than comparable ITAR exemptions. Similarly, EAR procedures should not be more restrictive than comparable ITAR procedures. As one public comment in response to the July 15 rule stated, ''[r]egulatory changes that have the unintended result of being more onerous than current requirements are not beneficial for U.S. national security or economic interests and will not further the stated objectives of comprehensive Export Control Reform.'' BIS agrees.

Revisions Addressed in This Proposed Rule

This rule proposes certain measures to ease the transition for those items moving from State to Commerce jurisdiction, including establishing a General Order regarding continued use of State authorizations for a specified period, broadening license exceptions consistent with ITAR exemptions, and extending the two-year validity period of Commerce licenses to match State's four-year period. In the course of broadening certain license exceptions, this rule streamlines and updates existing text to reduce undue complexity. This rule also addresses concerns regarding the *de minimis* rule by proposing alternative provisions. Specifically, this rule responds to public comments by proposing a uniform 25 percent *de minimis* rule for reexports of ''600 series'' items to all countries, except for countries subject to U.S. arms embargoes, which would be subject to a zero percent *de minimis* rule.

Moreover, this rule augments the framework constructed by the July 15 rule (and modified by the November 7 rule) by proposing additional changes to the EAR necessary to implement Export Control Reform. Note that in addition to applying to items transitioning from the ITAR, many revisions also would apply to items currently subject to the EAR, such as changes to validity periods and reporting thresholds for the Automated Export System.

Finally, in response to Executive Order 13563, this rule proposes revisions to license exceptions for government uses and temporary exports

that streamline and update unduly complex or outmoded provisions in addition to broadening certain provisions to implement Export Control Reform. On August 5, 2011, BIS issued a notice soliciting public comments on all of its existing and proposed rules, with the exception of those rules related to the Export Control Reform Initiative, which solicit public comment separately. The comment period for the notice closed on February 1, 2012. BIS received 22 comments. Three issues raised in these comments involve issues related to transition issues and are addressed in this proposed rule. The comments relevant to this rule suggested various amendments to make the EAR more consistent with the ITAR and State Department policy. License Exception GOV should be broadened to include those acting on behalf of the U.S. Government. License Exception TSU should be broadened to allow release of technology in the United States by U.S. universities to their employees. License validity periods should be lengthened. These comments dovetailed with comments submitted in response to the July 15 and November 7 rules, and with BIS's own analysis. These proposed changes are discussed in the License Exception and License Issuance sections. Other comments on the August 5 notice will be summarized in future proposed rules as those issues are addressed. Commerce's full plan can be accessed at: *http://open.commerce.gov/news/2011/08/23/commerce-plan-retrospective-analysis-existing-rules.*

Transition

This proposed rule details, and solicits public comment on, the amendments to the EAR that would be necessary to effect the transition of items from the ITAR. In addition to protecting and enhancing U.S. national security, Export Control Reform is expected to generate significant long-term benefits for U.S. exporters in the form of more efficient and flexible export controls that are more tailored to the significance of the item. In contrast, the ITAR, as a result of the Arms Export Control Act, is a less flexible regulatory structure. The least significant part or component is generally controlled the same way as the most significant part or component and the end item itself. In the short term, however, both government and industry will need to adjust licensing and compliance procedures.

BIS anticipates that the Department of State, Directorate of Defense Trade Controls (DDTC) will set forth approximately a two-year period during which, under certain circumstances, holders of DDTC authorizations that include items transitioning to the EAR may continue to use those authorizations. This proposed rule should be read in conjunction with DDTC's proposed policy statement regarding its Export Control Reform Transition Plan (INSERT FR CITE). Consistent with DDTC's policy statement, all provisos, conditions, or other requirements placed on ITAR authorizations will continue to apply as long as such authorizations are in use.

General Order

This rule proposes to add a new General Order No. 5 (Supplement No. 1 to part 736 of the EAR). In the proposed General Order No. 5, holders of State licenses for items that transition to Commerce jurisdiction who wish to begin using BIS authorizations may do so as early as the effective date of the rule that transfers jurisdiction of their items by returning their DDTC licenses in accordance with § 123.22 of the ITAR and complying with the EAR.

On the effective date of each rule that adds an item to the CCL that was previously subject to the ITAR, that item will be subject to the EAR. Authorizations issued by DDTC before the transition date for those items may continue in effect as specified by DDTC in the Department of State's Export Control Reform Transition Plan. Foreign consignees or end users with items that have transitioned from State to Commerce jurisdiction must comply with the EAR for subsequent reexports or transfers.

Exporters, temporary importers, manufacturers, and brokers are cautioned to closely monitor ITAR and EAR compliance concerning Department of State licenses and agreements for items transitioning from USML to CCL. Parties who discover that they may have violated the ITAR, the EAR, or any license or authorization issued thereunder, are strongly encouraged to consult with BIS or DDTC and avail themselves of the appropriate department's current, established procedures for submitting voluntary disclosures and for requesting specific authorization to take any further actions in connection with that item.

License Exceptions

License Exceptions are published authorizations set forth in part 740 of the EAR that allow exports, reexports, and in-country transfers that would otherwise require a license to proceed without one if certain conditions are met. The same principle underlies ITAR exemptions. As part of the general effort under the Export Control Reform Initiative to begin harmonizing the definitions, structure, and licensing aspects of the EAR and the ITAR, BIS undertook a comprehensive review of both EAR license exceptions and ITAR exemptions. While the EAR are generally believed to offer more flexibility than the ITAR, the BIS review of its regulations and public comments on the July 15 rule identified certain specific instances where the EAR would inadvertently be more restrictive. According to public comments received in response to the July 15 and November 7 proposed rules, exporters found that exemptions under the ITAR for some of their items were broader than license exceptions under the EAR. These comments stemmed from concerns over implementing Export Control Reform for transactions of interest to those commenters rather than from any specific BIS proposals to revise license exceptions.

This rule proposes to harmonize the provisions of several EAR license exceptions with several ITAR exemptions, as set out in detail below, but only insofar as they are permitted by law and otherwise relevant to ''600 series'' items and other items subject to the EAR. In particular, BIS has no authority to change the scope of license exceptions available for items controlled for Missile Technology reasons because of statutory restrictions. *See* section (6)(l) of the Export Administration Act of 1979, as amended, 50 U.S.C. appx. 2405(l).

BIS welcomes comments on the differences between license exceptions under the EAR and exemptions under the ITAR and the issues they raise for those attempting to comply with both bodies of regulation or to transition from ITAR compliance to EAR compliance. Given the differences between the two systems, BIS is interested in comments regarding where deviations in the scope of control under the EAR versus the ITAR may be appropriate, especially with respect to treatment of reexports and in-country transfers. Note that license exceptions closely linked to specific items, such as firearms, that have not yet been proposed for control under the EAR will likely be addressed in rules related to those items. Descriptions of specific scenarios make particularly helpful examples.

Restrictions on All License Exceptions

Proposed new paragraphs (a)(15) and (a)(16) to § 740.2 describe restrictions on all license exceptions. This rule proposes restrictions on certain exports for which prior notification to Congress will be made, as explained below in the

discussion of major defense equipment. In addition, this rule proposes to revise a restriction originally proposed in the July 15 rule regarding the use of license exceptions for ''600 series'' items to U.S. arms embargoed countries, which was subsequently proposed to be amended in *Revisions to the Export Administration Regulations (EAR): Control of Personal Protective Equipment, Shelters, and Related Items the President Determines No Longer Warrant Control Under the United States Munitions List (USML)* published on June 7, 2012 (77 FR 33688). The text set forth in this rule uses as a baseline the proposed provision published on June 7, 2012. This rule proposes restricting most license exception eligibility for ''600 series'' items not only destined to U.S. arms embargoed countries, but also for ''600 series'' items manufactured in or shipped from those countries as well, consistent with the ITAR (§ 126.1(a)).

License Exception TMP

This rule proposes a complete revision of § 740.9, License Exception Temporary Imports, Exports and Reexports (TMP) paragraphs (a) (Temporary exports and reexports) and (b) (Exports of items temporarily in the United States) to streamline the existing exception, which successive amendments over the years have rendered increasingly difficult to read. This streamlining is consistent with the retrospective review and regulatory improvement directed in E.O. 13563 and is not intended to substantively change the scope of TMP beyond adding explicit authority for in-country transfers and broadening to match the scope of the ITAR exemptions. Proposed amendments to streamline other EAR License Exceptions and other EAR provisions will be addressed in separate **Federal Register** notices. Changes in country scope of certain provisions reflect the limitations set forth in part 746 of the EAR (Embargoes and Special Controls) unless otherwise noted. References to exports of items controlled for missile technology reasons were deleted because such exports are restricted by § 740.2(a)(5). Temporary exports under License Exception TMP to a U.S. subsidiary, affiliate, or facility abroad would no longer be limited to exports to Country Group B countries in order to make TMP consistent with § 123.16(b)(9) of the ITAR.

This rule would add notes to the temporary imports paragraph of License Exception TMP that incorporate concepts explicit in §§ 123.19 and 123.13 of the ITAR. In this paragraph, notes are added stating that a shipment originating in Canada or Mexico that incidentally transits the United States en route to a delivery point in the same country does not require a license, and that a shipment by air or vessel from one location in the United States to another location in the United States via a foreign country does not require a license. This rule proposes to add a note to TMP referencing the USMIL and a conforming change to part 734 noting that defense articles on the USMIL are controlled by the Bureau of Alcohol, Tobacco, Firearms and Explosives (ATF) for purpose of permanent import under its regulations at 27 CFR part 447. This rule also proposes to delete references to outdated forms in this paragraph. Finally, this rule proposes to remove the term ''unwanted'' from § 740.9(b)(3), because the term, which was undefined, was confusing to the public.

BIS welcomes comments on both substantive and structural aspects of the proposed clarifying changes to TMP.

License Exception RPL

This rule proposes to revise RPL to allow export or reexport of spares up to $500 in total value. RPL would also be revised to remove the requirement that the ability to return serviced commodities and software or replace defective or unacceptable U.S.-origin equipment be limited to the original exporters. These revisions would correspond to § 123.16(b)(2) of the ITAR, the availability of which is not limited to original exporters. The July 15 rule proposed to revise § 740.10, License Exception Repair and Replacement (RPL) to reflect the proposed new definitions of certain terms, such as ''part'' or ''component,'' and to allow replacement parts for defense articles to be exported under RPL. This rule does not modify the proposed July 15 RPL revisions.

License Exception GOV

Consistent with the retrospective review and regulatory improvement directed in Executive Order 13563, this rule proposes a complete revision of § 740.11, License Exception GOV (Governments; International Organizations; International Inspections under the Chemical Weapons Convention; and the International Space Station). Because existing GOV contains many provisions that exclude items on the Wassenaar Arrangement's Sensitive and Very Sensitive Lists, and those provisions were always intended to match the Wassenaar Arrangement's Sensitive and Very Sensitive Lists, this rule proposes to add those lists to the EAR as supplements to the Commerce Control List and revise GOV to refer to the new supplements. This revision would shorten and simplify GOV, allowing its current supplement to § 740.11 text to be consolidated in the main section. The supplements containing the Sensitive and Very Sensitive Lists would be new Supplement Nos. 6 and 7 to part 774 of the EAR, as discussed below.

The July 15 proposed rule restricted ''600 series'' items' eligibility for GOV to governments of those 36 countries listed in § 740.20(c)(1) (License Exception STA) and the United States. The November 7 rule proposed certain changes to License Exception GOV with respect to restricting certain aircraft-related software and technology. This rule modifies those proposed provisions by excluding ''software'' prohibited by proposed Supplement No. 4 to part 740 from eligibility for GOV. However, proposed Supplement No. 4 to part 740 is not republished in this rule; nor does BIS seek comment on its content.

The July 15 rule proposed, and the November 7 rule proposed a modification to a provision in License Exception STA to allow exports, reexports, or transfers (in-country) of ''600 series'' items to non-governmental end users as long as the items were for ultimate government end use. This rule similarly proposes expanding GOV to authorize items consigned to non-governmental end users, such as U.S. Government contractors, acting on behalf of the U.S. Government in certain situations, subject to written authorization from the appropriate agency and additional export clearance requirements. This rule also adds provisions for exports made under the direction of the U.S. Department of Defense consistent with §§ 125.4(b)(1), 125.4(b)(3) and 126.6(a) of the ITAR. This rule also proposes a note clarifying the authority for foreign military sales consistent with § 126.6(c) of the ITAR.

Generally, this rule does not propose expansion of License Exception GOV beyond the broadening necessary to create equivalent EAR authorizations to correspond to existing ITAR authorizations. This rule does propose, however, an expansion to the scope of countries eligible to receive items on the Sensitive List under the proposed revised § 740.11(a) (International Safeguards) and (c) (Cooperating Governments). The revised country scope for governments eligible to receive items on the Sensitive List under the proposed revised § 740.11(c) would be the same governments of those 36 countries listed in § 740.20(c)(1) (License Exception STA).

BIS welcomes comments on both substantive and structural aspects of the proposed clarifying changes to License Exception GOV.

License Exception TSU

This rule would revise § 740.13 License Exception Technology and Software—Unrestricted (TSU) to include explicitly training information in the operation technology authorized, as it is in § 125.4(b)(5) of the ITAR. This rule also proposes adding TSU authorization for the release of software and technology in the United States by U.S. universities to their bona fide and full-time regular foreign national employees and other foreign nationals to correspond with a similar authorization in § 125.4(b)(10) of the ITAR and an authorization at § 125.4(b)(4) of the ITAR for copies of technology previously authorized for export to same recipient. This authorization would, however, be subject to the end-use and end-user restrictions in part 744 of the EAR, would not be available for encryption-related software controlled for ''EI'' and other software and technology controlled for ''MT'' (Missile Technology) reasons, and would not be eligible for nationals of countries subject to U.S. arms embargoes for ''600 series'' items.

Such changes are part of the broader, long-term Export Control Reform Initiative effort to harmonize the EAR's and the ITAR's definitions, terms, and, to the extent warranted, license exceptions. Efforts to harmonize other EAR and ITAR terms will be addressed in future **Federal Register** notices. BIS nonetheless encourages comments on all ITAR and EAR terms, phrases, and provisions that warrant harmonization.

License Exception STA

This rule proposes an additional limitation on use of License Exception Strategic Trade Authorization (STA) in § 740.20. This proposed revision would limit use of License Exception STA for ''600 series'' items to foreign parties that have received U.S. items under a license issued either by BIS or DDTC. This ensures that such parties will have been vetted by a U.S. Government licensing process. For purchasers, intermediate consignees, ultimate consignees, and end users that have not been so vetted, a license would be required even for STA-eligible items. Once that license has been issued, subsequent eligible exports may be made under STA.

This rule also proposes that for ''600 series'' items, the prior consignee statement set forth in § 740.20(d)(2) contain the consignee's confirmation that the items are for ultimate government end use and agreement to permit the U.S. Government to conduct end-use checks. These revisions provide a structure for verifying that ''600 series'' items are used as intended and an assurance that end-use checks can be performed expeditiously.

License Issuance

Current ITAR licenses are generally valid for four years compared to two years under the EAR. Agreements under the ITAR may be valid as long as ten years. In order to harmonize the EAR with the ITAR, this rule proposes to revise § 750.7(g) to extend the validity period of BIS licenses from two years to four years, with some exceptions, unless otherwise specified on the license at the time that it is issued. Exporters may request an extended validity period pursuant to § 750.7(g)(1) beyond four years. Such requests will be reviewed on a case-by-case basis. Grounds for requesting extension would include having agreements previously approved by the Department of State for a longer period of time. BIS licenses generally designate one ultimate consignee and may have many designated end users. DDTC authorizations may designate multiple foreign end users. This rule proposes to revise § 750.7(c) explicitly to allow direct shipments to approved end users.

License Review Policy

License applications made to BIS receive interagency review. For ''600 series'' items, this rule proposes to modify the section describing regional stability controls by adding to § 742.6(b)(1) a policy of case-by-case review to determine whether the transaction is contrary to the national security or foreign policy interests of the United States. This proposed policy is consistent with the policy for State and Defense review of ITAR licenses. The July 15 and November 7 rules proposed certain changes to the license review policy in § 742.6(b)(1). The July 15 proposal was adopted without change and published in final form on April 13, 2012 (77 FR 22199). This rule does not modify the proposed provisions from the November 7 rule, but the proposed provision is restated here for the public's convenience and to facilitate a complete understanding of BIS's license review policy proposal. As such, BIS is not seeking additional public comments on that provision in this rule.

Reporting and Notifications

The current EAR require reporting for exports of items on the Wassenaar Arrangement's Sensitive List under license exception, and those provisions were always intended to match the Wassenaar Arrangement's Sensitive List. This rule would shorten the Wassenaar Arrangement reporting requirements section, found at § 743.1, and would include a cross reference to the Sensitive List rather than setting forth ECCN paragraphs, much as was done in this rule's proposed License Exception GOV.

As set forth in § 123.15 of the ITAR, Section 36(c) of the Arms Export Control Act requires that a certification be provided to the Congress prior to approval of certain high-value exports of major defense equipment, other defense articles, or firearms. Major defense equipment (MDE), for purposes of §§ 743.5 and 750.4 of the EAR, means any item of significant military equipment having a nonrecurring research and development cost of more than $50,000,000 or a total production cost of more than $200,000,000. Approvals may not be granted when the Congress has enacted a joint resolution prohibiting the export. While this process is not required for items subject to the EAR, BIS would institute these procedures in the EAR for such MDE items subject to the EAR. This rule proposes the creation of a new § 743.5, which would require exporters to notify BIS of such transactions for all exports except those made under License Exception GOV. When a license application is submitted, BIS would be able to, and will, draw the necessary information from the application to make the congressional notification. Section 740.2, restrictions on license exceptions, discussed above, would be revised to preclude use of license exceptions for such transactions.

To reflect the proposed changes to part 743, this rule proposes amending the title of this part to read, ''Special Reporting and Notification.''

***De Minimis* U.S. Content in Foreign-Made Items and Foreign-Produced Direct Products of U.S. Technology**

Section 734.4 of the EAR sets forth the *de minimis* provisions, which provide that foreign-made items incorporating below *de minimis* levels of U.S. content are not subject to the EAR. The July 15 rule proposed a 10% *de minimis* level for ''600 series'' content. Many commenters found these proposed provisions confusing and anticipated difficulty implementing them, primarily due to having different *de minimis* levels for different items going to the same country. Several of the public comments in response to the July 15 rule suggested simplifying the proposed *de minimis* provisions by allowing a

25% level for those countries eligible for paragraph (c)(1) of License Exception Strategic Trade Authorization (STA) (see § 740.20). Two commenters to the November 7 proposed rule suggested that BIS adopt the existing 25% *de minimis* rule described in the Export Administration Act for all countries except those subject to U.S. arms embargoes, which would be subject to a zero percent *de minimis* rule. Based on a review of those comments and further interagency deliberation, this rule proposes a rule suggested by commenters to the November 7 rule, i.e., an exclusion of ''600 series'' U.S. content from eligibility for *de minimis* when the foreign-made items are destined to U.S. arms embargoed countries and, consistent with current EAR provisions, a 25% *de minimis* for all other destinations. This proposal, in addition to its relative simplicity, retains the status quo for ''600 series'' content destined to U.S. embargoed countries in that the ITAR effectively has a zero percent *de minimis* rule.

BIS believes that this proposal simultaneously addresses the calculation concerns of the commenters while tightening reexport controls over foreign-made items that contain any ''600 series'' content destined for countries subject to U.S. arms embargoes. This approach would advance the cause of the reform effort by reducing the negative impact of the ''see-through'' rule in place under the ITAR with respect to trade with most of the world; would be simpler to calculate; would maintain the EAR's 25 percent *de minimis* rule for reexports to most countries; and would carry forward the ITAR's zero percent *de minimis* rule with respect to reexports of military items to countries subject to U.S. arms embargoes. The latter aspect of the proposal furthers U.S. national security and foreign policy interests by discouraging, indeed prohibiting, the reexport of foreign-made items containing ''600 series'' content to countries subject to U.S. arms embargoes while removing the incentive the ITAR creates for foreign buyers to avoid U.S.-origin content with respect to trade by and between other countries.

This rule also proposes changes to the regulations that address foreign-produced direct products of U.S. technology, which was a subject that was not addressed in the July 15 rule. Currently, certain foreign-produced direct products of U.S. technology are subject to the EAR: National security controlled items that are direct products of U.S. national security-controlled technology, when those products are destined to countries of concern for national security reasons (Country Group D:1) or terrorist-supporting countries (Country Group E:1). This proposed rule would expand these provisions by adding an additional country and product scope. Foreign-produced direct products of U.S.-origin ''600 series'' technology, or of a plant that is a direct product of U.S.-origin ''600 series'' technology, that are ''600 series'' items would be subject to the EAR when reexported to countries of concern for national security, chemical and biological weapons, missile technology or anti-terrorism reasons (Country Groups D:1, D:3, D:4 or E:1 in Supplement No 1 to part 740) or to a U.S. arms embargoed country (see § 740.2(a)(12)). Foreign-made items subject to the EAR because of this rule would be subject to the same license requirements to the new country of destination as if of U.S. origin.

Because of the expansion of the provisions at § 736.2(b)(3) to include ''600 series'' items, this rule proposes to remove the penultimate paragraph in Supplement No. 1 to part 764 that states that the standard denial order ''does not prohibit any export, reexport, or other transaction subject to the EAR where the only items involved that are subject to the EAR are the foreign-produced direct product of U.S.-origin technology.''

China Military End Use

Section 744.21 of the EAR imposes a restriction on certain items destined for the People's Republic of China for a ''military end use,'' defined as for incorporation into military items or for the use, development or production of military items. The July 15 rule proposed: (1) Expanding the description of military items in the § 744.21(f) definition of ''military end use'' to include ''600 series'' items; and (2) adding items controlled by the .y paragraphs in the ''600 series'' ECCNs to the list of items subject to this restriction (those listed in Supplement No. 2 to part 744 (List of Items Subject to the Military End-Use License Requirement of § 744.21)). Three commenters requested clarification of whether 600 series and subparagraph .y items being exported to China would be subject to a policy of denial under the military end use controls. One commenter suggested that because such items have little or no military significance, they should be excluded from China military end use controls.

Based on the comments' request for clarification and BIS's internal analysis, this rule proposes to expand § 744.21 to state explicitly that all ''600 series'' items are subject to this restriction. The basis for this revision is that items ''specially designed'' for a defense article or other military end item are presumptively for a military end use. If an item were ''specially designed'' for a civil or a dual-use application, it would not be controlled by the .y lists within some of the 600 series ECCNs. Therefore, the effect of this proposed change would be to impose a license requirement for all ''600 series'' items, including .y items, destined to China, which would be reviewed pursuant to § 744.21. This proposal replaces the July 15 proposed amendment to Supplement No. 2 to part 744; the July 15 proposed amendment to § 744.21(f) is unchanged.

Export Clearance

Exporters enter information for both State- and Commerce-controlled transactions into the Automated Export System (AES). Many exports worth less than $2500 are exempted from the requirement to enter information on the transaction into AES. This rule proposes to revise § 758.1 to remove the low-value exemption for ''600 series'' items for all destinations, including Canada, and require AES filing for all ''600 series'' items. Requiring entry of ''600 series'' information regardless of value or destination will provide the U.S. Government with the same information on exports of these items under Commerce control as is now available for such items when they are subject to the ITAR. This rule also proposes to revise § 758.1 to require AES filing for all exports under License Exception Strategic Trade Authorization (STA), regardless of value, to enable the U.S. Government to obtain information about low-value shipments of these items.

This rule proposes to preclude the option of post-departure filing for exports of ''600 series'' items because this option is not permitted for ITAR-controlled exports now. This rule also proposes removing the option of post-departure filing for License Exception STA and Authorization VEU because the nature of these authorizations requires pre-departure filing of this information to ensure compliance with their terms and conditions.

The provisions of § 758.6 require exports to be accompanied by a Destination Control Statement (DCS) identifying the items as subject to the EAR. Given the nature of the ''600 series'' items and requirements related to them, this rule proposes a more specific DCS for ''600 series'' items that would require exporters to identify the ECCNs of all ''600 series'' items being exported in the text to ensure that consignees are aware that they have such items.

ECCN 0A919 and Supplement Nos. 6 and 7 to the Commerce Control List

This rule proposes to revise ECCN 0A919, which controls certain military commodities produced outside the United States, to conform to the proposed revisions of the *de minimis* and foreign-produced direct product rules set forth in this rule.

As described above, this rule proposes creating two new supplements to part 774, the Commerce Control List. New Supplement Nos. 6 and 7 would append to the Commerce Control List the Wassenaar Arrangement's Sensitive and Very Sensitive Lists. These lists would be referenced by proposed revised provisions in License Exception GOV and Wassenaar Arrangement reporting requirements in part 743. While the items on the lists would be identified by ECCN rather than by Wassenaar Arrangement numbering, the item descriptions would be drawn directly from the Wassenaar Arrangement.

Relationship to the July 15 and November 7 Proposed Rules

As referenced above, the purpose of the July 15 proposed rule was to set up the framework to support the transfer of items from the USML to the CCL. To facilitate that goal, the July 15 proposed rule contained concepts that were meant to be applied across the EAR. However, as BIS undertakes rulemakings to move specific categories of items from the USML to the CCL, there may be unforeseen issues or complications that may require BIS to reexamine those concepts. The comment period for the July 15 proposed rule closed on September 13, 2011.

The November 7 proposed rule proposed modifications to that framework. The comment period for the November 7 rule closed on December 22, 2011.

To the extent that this rule's proposals affect any provision in the July 15 or November 7 proposed rules or any provision in those proposed rules affects this proposed rule, BIS will consider comments on those provisions so long as they are within the context of the changes proposed in this rule.

BIS believes that the following aspects of the July 15 and November 7 proposed rules are among those that could affect or be affected by this proposed rule:

- *De minimis* provisions in § 734.4;
- Restrictions on use of license exceptions in §§ 740.2, 740.10, 740.11, and 740.20;
- Licensing policy under § 742.6(b)(1);
- Reporting requirements under part 743;
- Addition of ''600'' series items to Supplement No. 2 to Part 744—List of Items Subject to the Military End-Use Requirement of § 744.21; and
- Records to be retained under § 762.2.

Although the Export Administration Act expired on August 20, 2001, the President, through Executive Order 13222 of August 17, 2001, 3 CFR, 2001 Comp., p. 783 (2002), as extended by the Notice of August 12, 2011, 76 FR 50661 (August 16, 2011), has continued the Export Administration Regulations in effect under the International Emergency Economic Powers Act. BIS continues to carry out the provisions of the Export Administration Act, as appropriate and to the extent permitted by law, pursuant to Executive Order 13222.

Regulatory Requirements

1. Executive Orders 13563 and 12866 direct agencies to assess all costs and benefits of available regulatory alternatives and, if regulation is necessary, to select regulatory approaches that maximize net benefits (including potential economic, environmental, public health and safety effects, distribute impacts, and equity). Executive Order 13563 emphasizes the importance of quantifying both costs and benefits, of reducing costs, of harmonizing rules, and of promoting flexibility. This rule has been designated a ''significant regulatory action,'' although not economically significant, under section 3(f) of Executive Order 12866. Accordingly, the rule has been reviewed by the Office of Management and Budget (OMB).

2. Notwithstanding any other provision of law, no person is required to respond to, nor is subject to a penalty for failure to comply with, a collection of information, subject to the requirements of the Paperwork Reduction Act of 1995 (44 U.S.C. 3501 *et seq.*) (PRA), unless that collection of information displays a currently valid OMB control number. This proposed rule would affect the following approved collections: Simplified Network Application Processing System (control number 0694–0088), which includes, among other things, license applications; license exceptions (0694–0137); voluntary self-disclosure of violations (0694–0058); recordkeeping (0694–0096); export clearance (0694–0122); and the Automated Export System (0607–0152).

As stated in the proposed rule published at 76 FR 41958 (July 15, 2011), BIS believed that the combined effect of all rules to be published adding items to the EAR that would be removed from the ITAR as part of the administration's Export Control Reform Initiative would increase the number of license applications to be submitted by approximately 16,000 annually. As the review of the USML has progressed, the interagency group has gained more specific information about the number of items that would come under BIS jurisdiction whether those items would be eligible for export under license exception. As of June 21, 2012, BIS believes the increase in license applications may be 30,000 annually, resulting in an increase in burden hours of 8,500 (30,000 transactions at 17 minutes each) under control number 0694–0088.

3. This rule does not contain policies with Federalism implications as that term is defined under E.O. 13132.

4. The Regulatory Flexibility Act (RFA), as amended by the Small Business Regulatory Enforcement Fairness Act of 1996 (SBREFA), 5 U.S.C. 601 *et seq.,* generally requires an agency to prepare a regulatory flexibility analysis of any rule subject to the notice and comment rulemaking requirements under the Administrative Procedure Act (5 U.S.C. 553) or any other statute, unless the agency certifies that the rule will not have a significant economic impact on a substantial number of small entities. Under section 605(b) of the RFA, however, if the head of an agency certifies that a rule will not have a significant impact on a substantial number of small entities, the statute does not require the agency to prepare a regulatory flexibility analysis. Pursuant to section 605(b), the Chief Counsel for Regulations, Department of Commerce, certified to the Chief Counsel for Advocacy, Small Business Administration that this proposed rule, if promulgated, will not have a significant impact on a substantial number of small entities for the reasons explained below. Consequently, BIS has not prepared a regulatory flexibility analysis. A summary of the factual basis for the certification is provided below.

Number of Small Entities

The Bureau of Industry and Security (BIS) does not collect data on the size of entities that apply for and are issued export licenses. Although BIS is unable to estimate the exact number of small entities that would be affected by this rule, it acknowledges that this rule would affect some unknown number.

Economic Impact

This proposed rule is part of the Administration's Export Control Reform Initiative. Under that initiative, the USML would be revised to be a

''positive'' list, *i.e.,* a list that does not use generic, catch-all controls on any part, component, accessory, attachment, or end item that was in any way specifically modified for a defense article, regardless of the article's military or intelligence significance or non-military applications. At the same time, articles that are determined to no longer warrant control on the USML would become controlled on the CCL. Such items, along with certain military items that currently are on the CCL, will be identified in specific Export Control Classification Numbers (ECCNs) known as the ''600 series'' ECCNs. In addition, some items currently on the Commerce Control List would move from existing ECCNs to the new 600 series ECCNs.

In particular, this rule proposes certain measures to ease the transition for those items moving from State to Commerce jurisdiction. The changes include establishing a General Order regarding continued use of State authorizations for a specified period, broadening license exceptions consistent with ITAR exemptions, and extending the two-year validity period of Commerce licenses to match State's four-year period. In the course of broadening certain license exceptions, this rule streamlines and updates existing text to reduce undue complexity. This rule also addresses specific concerns raised in public comments on recent rules by proposing a revised *de minimis* rule for ''600 series'' items. Moreover, this rule proposes additional conforming changes that are necessary to implement the Export Control Reform Initiative, but also would affect items currently subject to the EAR, such as changes to reporting thresholds for the Automated Export System. Finally, in response to the President's directive in Executive Order 13563, which directed agencies to conduct retrospective reviews of existing regulations, this rule proposes revisions to license exceptions for government uses and temporary exports that streamline and update unduly complex or outmoded provisions in addition to broadening certain provisions to implement Export Control Reform.

In practice, the greatest impact of this rule on small entities would likely be reduced administrative costs and reduced delay for exports of items that are now on the USML but would become subject to the EAR. By streamlining provisions of the EAR, BIS would make it easier to understand and comply with certain license exceptions, which in turn would allow exporters to avail themselves of these exceptions and reduce their licensing and compliance burdens. This rule also proposes broadening license exceptions and extending license validity periods to correspond to those available under the ITAR to avoid imposing burdens on exporters as a result of their items' changing jurisdictional status. These proposed changes may also reduce the burden small companies (and all other entities) who export non-''600 series'' items on the CCL.

In addition, parts and components controlled under the ITAR remain under ITAR control when incorporated into foreign-made items, regardless of the significance or insignificance of the item, discouraging foreign buyers from incorporating such U.S. content. The availability of a *de minimis* rule under the EAR may reduce the incentive for foreign manufacturers to design out or avoid purchasing U.S.-origin parts and components. In response to comments on the July 15 rule, this rule proposes a simpler method of calculating *de minimis* value for ''600 series'' content. A simpler method of calculating *de minimis* reduces the likelihood of foreign manufacturers' designing out U.S.-origin parts and components, thus increasing the ability of U.S. firms to compete in the global marketplace and to strengthen the U.S. defense industrial base.

In spite of the benefits detailed above, the need for exporters to change established licensing and compliance procedures as their items change jurisdiction will likely incur short-term costs (*e.g.,* for database changes). This rule proposes an implementation plan to mitigate these short-term costs by allowing affected entities to continue operating under their existing authorizations and procedures over a two-year transition period should they choose to do so, while allowing the option to transition as of the effective date of the final rule.

Conclusion

BIS is unable to determine the precise number of small entities that would be affected by this rule. Based on the facts and conclusions set forth above, BIS believes that any burdens imposed by this rule would be offset by a reduction in the number of items that would require a license, increased opportunities for use of license exceptions for exports to certain countries, simpler export license applications, reduced or eliminated registration fees and application of a *de minimis* threshold for foreign-made items incorporating U.S.-origin parts and components, which would reduce the incentive for foreign buyers to design out or avoid U.S.-origin content. For these reasons, the Chief Counsel for Regulations of the Department of Commerce certified to the Chief Counsel for Advocacy of the Small Business Administration that this rule, if adopted in final form, would not have a significant economic impact on a substantial number of small entities. Accordingly, no IRFA is required and none has been prepared.

List of Subjects

15 CFR Part 734

Administrative practice and procedure, Exports, Inventions and patents, Research, Science and technology.

15 CFR Part 736

Exports.

15 CFR Parts 740, 750 and 758

Administrative practice and procedure, Exports, Reporting and recordkeeping requirements.

15 CFR Part 742

Exports, Terrorism.

15 CFR Part 743

Administrative practice and procedure, Reporting and recordkeeping requirements.

15 CFR Part 744

Exports, Reporting and recordkeeping requirements, Terrorism.

15 CFR Part 762

Administrative practice and procedure, Business and industry, Confidential business information, Exports, Reporting and recordkeeping requirements.

15 CFR Part 764

Administrative practice and procedure, Exports, Law enforcement, Penalties.

15 CFR Part 774

Exports, Reporting and recordkeeping requirements.

For the reasons stated in the preamble, the Export Administration Regulations (15 CFR parts 730 through 774) are proposed to be amended as follows:

PART 734—[AMENDED]

1. The authority citations paragraph for part 734 continues to read as follows:

Authority: 50 U.S.C. app. 2401 *et seq.;* 50 U.S.C. 1701 *et seq.;* E.O. 12938, 59 FR 59099, 3 CFR, 1994 Comp., p. 950; E.O. 13020, 61 FR 54079, 3 CFR, 1996 Comp., p. 219; E.O. 13026, 61 FR 58767, 3 CFR, 1996 Comp., p. 228; E.O. 13222, 66 FR 44025, 3 CFR, 2001

Comp., p. 783; Notice of August 12, 2011, 76 FR 50661 (August 16, 2011); Notice of November 9, 2011, 76 FR 70319 (November 10, 2011).

2. Section 734.3 is amended by adding a new paragraph (b)(1)(vi) to read as follows:

§ 734.3 Items subject to the EAR.

* * * * *

(b) * * *

(vi) *Bureau of Alcohol, Tobacco, Firearms and Explosives.* Unless otherwise noted, all references to the United States Munitions List (''USML'') are to the list of defense articles that are controlled for purposes of export and temporary import pursuant to the International Traffic in Arms Regulations (''ITAR''), 22 CFR Parts 120 et seq., and not to the list of defense articles on the USML that are controlled by the Bureau of Alcohol, Tobacco, Firearms and Explosives (ATF) for purpose of permanent import under its regulations at 27 CFR Part 447. Pursuant to section 38(a)(1) of the Arms Export Control Act (AECA), 22 U.S.C. § 2779, all defense articles controlled for export or import are part of the ''USML'' under the AECA. For the sake of clarity, the list of defense articles controlled by ATF for purposes of permanent import are on the United States Munitions Import List (USMIL). The transfer of defense articles from the ITAR's USML to the EAR's CCL for purposes of export controls does not affect the list of defense articles controlled on the USMIL under the AECA for purposes of permanent import controls.

* * * * *

3. Section 734.4 is amended by redesignating paragraph (a)(6) as paragraph (a)(7), and by adding a new paragraph (a)(6) to read as follows:

§ 734.4 *De minimis* U.S. content.

(a) Items for which there is no *de minimis* level.

* * * * *

(6) There is no *de minimis* level for foreign-made items that incorporate U.S.-origin ''600 series'' items when destined for a country subject to a U. S. arms embargo (see § 740.2(a)(12) of the EAR).

* * * * *

PART 736—[AMENDED]

4. The authority citations paragraph for part 736 continues to read as follows:

Authority: 50 U.S.C. app. 2401 *et seq.;* 50 U.S.C. 1701 *et seq.;* 22 U.S.C. 2151 note; E.O. 12938, 59 FR 59099, 3 CFR, 1994 Comp., p. 950; E.O. 13020, 61 FR 54079, 3 CFR, 1996 Comp., p. 219; E.O. 13026, 61 FR 58767, 3 CFR, 1996 Comp., p. 228; E.O. 13222, 66 FR 44025, 3 CFR, 2001 Comp., p. 783; E.O. 13338, 69 FR 26751, 3 CFR, 2004 Comp., p. 168; Notice of August 12, 2011, 76 FR 50661 (August 16, 2011); Notice of November 9, 2011, 76 FR 70319 (November 10, 2011).

5. Section 736.2 is amended by revising paragraph (b)(3) to read as follows:

§ 736.2 General prohibitions and determination of applicability.

* * * * *

(3) General Prohibition Three—Reexport and Export From Abroad of the Foreign-Produced Direct Product of U.S. Technology and Software (Foreign-Produced Direct Product Reexports)

* * * * *

(iv) *Additional country scope of prohibition for ''600 series'' items.* You may not, except as provided in paragraphs (b)(3)(vi) or (vii) of this section, reexport any ''600 series'' item subject to the scope of this General Prohibition 3 to a destination in Country Groups D:1, D:3, D:4, or E:1 (See Supplement No.1 to part 740 of the EAR) or to a U. S. arms embargoed country (see § 740.2(a)(12) of the EAR).

(v) *Product scope of foreign-made items in the ''600 series'' subject to prohibition.* This General Prohibition 3 applies if a ''600 series'' item meets either the conditions defining the direct product of technology or the conditions defining the direct product of a plant in paragraph (b)(3)(v)(A) or (B) of this section:

(A) *Conditions defining direct product of technology for ''600 series'' items.* Foreign-made ''600 series'' items are subject to this General Prohibition 3 if the foreign-made items meet both of the following conditions:

(*1*) They are the direct product of technology or software that is in the ''600 series'' as designated on the applicable ECCN of the Commerce Control List at part 774 of the EAR, and

(*2*) They are in the ''600 series'' as designated on the applicable ECCN of the Commerce Control List at part 774 of the EAR.

(B) *Conditions defining direct product of a plant for ''600 series'' items.* Foreign-made ''600 series'' items are also subject to this General Prohibition 3 if they are the direct product of a complete plant or any major component of a plant if both of the following conditions are met:

(*1*) Such plant or component is the direct product of technology that is in the ''600 series'' as designated on the applicable ECCN of the Commerce Control List at part 774 of the EAR, and

(*2*) Such foreign-made direct products of the plant or component are in the ''600 series'' as designated on the applicable ECCN of the Commerce Control List at part 774 of the EAR.

(vi) *License Exceptions.* Each license exception described in part 740 of the EAR supersedes this General Prohibition 3 if all terms and conditions of a given exception are met and the restrictions in § 740.2 do not apply.

(vii) ''600 series'' foreign-produced direct products of U.S. technology subject to this General Prohibition 3 do not require a license for reexport to the new destination unless the same item, if exported from the U.S. to the new destination, would have been prohibited or made subject to a license requirement by part 742, 744, 746, or 764 of the EAR.

6. Supplement No. 1 to part 736 is amended by adding General Order No. 5, to read as follows:

Supplement No. 1 to Part 736 General Orders

* * * * *

General Order No. 5

General Order No. 5 of [INSERT DATE OF PUBLICATION OF FINAL RULE]; Authorization for Items the President Determines No Longer Warrant Control Under the United States Munitions List (USML)

(a) *Continued use of DDTC authorizations for items that become subject to the EAR.* Items the President has determined no longer warrant control under the USML will become subject to the EAR as rules that effect this transition are published and effective. Authorizations issued by the Directorate of Defense Trade Controls (DDTC) of the Department of State for transactions involving these items may continue in effect as specified by DDTC in [INSERT CITE TO STATE'S FINAL EXPORT CONTROL REFORM TRANSITION PLAN]. To use BIS authorizations for these items, exporters, reexporters, and transferors of such items may return DDTC licenses in accordance with § 123.22 of the ITAR or terminate Technical Assistance Agreements, Manufacturing License Agreements, or Distribution and Warehousing Agreements in accordance with § 124.6 of the ITAR and thereafter export, reexport, or transfer (in-country) such items under applicable provisions of the EAR. No transfer (in-country) may be made of an item exported under a DDTC authorization containing provisos or other limitations without a license issued by BIS unless (i) the transfer (in-country) is authorized by an EAR License Exception and the terms and conditions of the License Exception have been satisfied or (ii), no license would otherwise be required under the EAR to export or reexport the item to the new end user.

(b) *Voluntary Self-Disclosure.* Parties to transactions involving transitioning items are cautioned to monitor closely their compliance with the EAR and the ITAR. Should a possible or actual violation of the EAR or ITAR, or of any license or authorization issued thereunder, be

discovered, the person or persons involved are strongly encouraged to submit a Voluntary Self-Disclosure to the Office of Export Enforcement, in accordance with § 764.5 of the EAR, or to DDTC, in accordance with § 127.12 of the ITAR, as appropriate. Permission from the Office of Exporter Services, in accordance with § 764.5(f) of the EAR, to engage in further activities in connection with that item may also be necessary.

(c) *Method of disclosure.* For violations involving items the President has determined no longer warrant control under the USML that occur or are discovered in the period during which DDTC allows continued use of State authorization for these items, disclosures and requests for permission to engage in further activities should be submitted to DDTC or BIS as appropriate.

PART 740—[AMENDED]

7. The authority citations paragraph for part 740 continues to read as follows:

Authority: 50 U.S.C. app. 2401 *et seq.;* 50 U.S.C. 1701 *et seq.;* 22 U.S.C. 7201 *et seq.;* E.O. 13026, 61 FR 58767, 3 CFR, 1996 Comp., p. 228; E.O. 13222, 66 FR 44025, 3 CFR, 2001 Comp., p. 783; Notice of August 12, 2011, 76 FR 50661 (August 16, 2011).

8. Section 740.2 is amended by adding new paragraphs (a)(12), (a)(15) and (a)(16) to read as follows:

§ 740.2 Restrictions on all license exceptions.

(a) * * *

(12) Items classified under the ''600 series'' that are destined to, or were shipped from or manufactured in a country subject to a United States arms embargo (Afghanistan, Belarus, Burma, China, Cote d'Ivoire, Cuba, Cyprus, Democratic Republic of Congo, Eritrea, Fiji, Haiti, Iraq, Iran, Lebanon, Liberia, Libya, North Korea, Somalia, Sri Lanka, Sudan, Syria, Venezuela, Vietnam, Yemen, and Zimbabwe) may not be authorized under any license exception except by License Exception TMP under § 740.9(a)(12) or License Exception BAG under § 740.14(h)(2) for exports to Afghanistan and Iraq, and License Exception GOV under § 740.11(b)(2)(ii).

Note to paragraph (a)(12): Countries subject to U.S. arms embargoes are identified by the State Department through notices published in the **Federal Register**. The list of arms embargoed destinations in this paragraph is drawn from 22 CFR § 126.1 and State Department **Federal Register** notices related to arms embargoes (compiled at *http://www.pmddtc.state.gov/embargoed_countries/index.html*) and will be amended when the State Department publishes subsequent notices. If there are any discrepancies between the list of countries in this paragraph and the countries identified by the State Department as subject to a U.S. arms embargo (in the **Federal Register**), the State Department's list of countries subject to U.S. arms embargoes shall be controlling.

* * * * *

(15) Items classified under the ''600 series'' are not eligible for any license exception, except to U.S. government end users under License Exception GOV (§ 740.11(b)), when they are destined to a country *outside* the countries listed in § 740.20(c)(1) (License Exception STA) and are:

(i) Major defense equipment sold under a contract in the amount of $14,000,000 or more;

(ii) Other ''600 series'' items sold under a contract in the amount of $50,000,000 or more; or

(iii) Firearms controlled under ECCN 0A601 under a contract in the amount of $1,000,000 or more.

(16) Items classified under the ''600 series'' are not eligible for any license exception, except to U.S. government end users under License Exception GOV (§ 740.11(b)), when they are destined to a country listed in § 740.20(c)(1) (License Exception STA) and are:

(i) Major defense equipment sold under a contract in the amount of $25,000,000;

(ii) Other ''600 series'' items sold under a contract in the amount of $100,000,000 or more; or

(iii) Firearms controlled under ECCN 0A601 under a contract in the amount of $1,000,000 or more.

9. Section 740.9 is amended by revising paragraphs (a) and (b) to read as follows:

§ 740.9 Temporary imports, exports, and reexports (TMP).

(a) *Temporary exports, reexports, and transfers (in-country).* License Exception TMP authorizes exports, reexports, and transfers (in-country) of items for temporary use abroad (including use in or above international waters) subject to the conditions specified in this paragraph (a). No item may be exported or reexported under this paragraph (a) if an order to acquire the item has been received before shipment; with prior knowledge that the item will stay abroad beyond the terms of this License Exception; or when the item is for subsequent lease or rental abroad.

(1) *Tools of trade.* Exports, reexports, or transfers (in-country) of commodities and software as tools of trade for use by the exporter or employees of the exporter may be made only to destinations other than Country Group E:2, Sudan or Syria; for Sudan, see paragraph (a)(2) of this section. The tools of trade must remain under the ''effective control'' of the exporter or the exporter's employee. Eligible items are usual and reasonable kinds and quantities of tools of trade for use in a lawful enterprise or undertaking of the exporter. Tools of trade include, but are not limited to, equipment and software as is necessary to commission or service items, provided that the equipment or software is appropriate for this purpose and that all items to be commissioned or serviced are of foreign origin, or if subject to the EAR, have been lawfully exported or reexported. Tools of trade may accompany the individual departing from the United States or may be shipped unaccompanied within one month before the individual's departure from the United States, or at any time after departure. Software used as a tool of trade must be protected against unauthorized access. Examples of security precautions to help prevent unauthorized access include the following:

(A) Use of secure connections, such as Virtual Private Network connections, when accessing IT networks for activities that involve the transmission and use of the software authorized under this license exception;

(B) Use of password systems on electronic devices that store the software authorized under this license exception; and

(C) Use of personal firewalls on electronic devices that store the software authorized under this license exception.

(2) *Sudan: Tools of Trade.* (i) *Permissible users.* A non-governmental organization or an individual staff member, employee or contractor of such organization traveling to Sudan at the direction or with the knowledge of such organization may export, reexport, or transfer (in-country) under this paragraph (a)(2).

(ii) *Authorized purposes.* Any tools of trade exported, reexported, or transferred (in-country) under this paragraph must be used to support activities to implement the Doha Document for Peace in Darfur; to provide humanitarian or development assistance in Sudan, to support activities to relieve human suffering in Sudan, or to support the actions in Sudan for humanitarian or development purposes; by an organization authorized by the Department of the Treasury, Office of Foreign Assets Control (OFAC) pursuant to 31 CFR 538.521 in support of its OFAC-authorized activities; or to support the activities to relieve human suffering in Sudan in areas that are exempt from the Sudanese Sanctions Regulations by virtue of the Darfur Peace and Accountability Act and Executive Order 13412.

(iii) *Method of export and maintenance of control.* The tools of

trade must accompany (either hand carried or as checked baggage) a traveler who is a permissible user of this provision or be shipped or transmitted to such user by a method reasonably calculated to assure delivery to the permissible user of this provision. The permissible user of this provision must maintain ''effective control'' of the tools of trade while in Sudan.

(iv) *Eligible items.* The only tools of trade that may be exported to Sudan under this paragraph (a)(2) are:

(A) Commodities controlled under ECCNs 4A994.b (not exceeding an adjusted peak performance of 0.008 weighted teraFLOPS), 4A994.d, 4A994.e (other than industrial controllers for chemical processing), 4A994.g and 4A994.h and ''software'' controlled under ECCNs 4D994 or 5D992 to be used on such commodities. Software must be loaded onto such commodities prior to export or reexport or be exported or reexported solely for servicing or in-kind replacement of legally exported or reexported software. All such software must remain loaded on such commodities while in Sudan;

(B) Telecommunications equipment controlled under ECCN 5A991 and ''software'' controlled under ECCN 5D992 to be used in the operation of such equipment. Software must be loaded onto such equipment prior to export or be exported or reexported solely for servicing or in-kind replacement of legally exported or reexported software. All such software must remain loaded on such equipment while in Sudan;

(C) Global positioning systems (GPS) or similar satellite receivers controlled under ECCN 7A994; and

(D) Parts and components that are controlled under ECCN 5A992, that are installed with, or contained in, commodities in paragraphs (a)(2)(iv)(A) and (B) of this section and that remain installed with or contained in such commodities while in Sudan.

(3) *Tools of trade: temporary exports and reexports of technology by U.S. persons.* (i) This paragraph authorizes usual and reasonable kinds and quantities of technology for use in a lawful enterprise or undertaking of a U.S. person to destinations other than Country Group E:2, Sudan or Syria. Only U.S. persons or their employees traveling or on temporary assignment abroad may export, reexport, transfer (in-country) or receive technology under the provisions of this paragraph (a)(3).

(A) Because this paragraph (a)(3) does not authorize any new release of technology, employees traveling or on temporary assignment abroad who are not U.S. persons may only receive under TMP such technology abroad that they are already eligible to receive through a current license, a license exception other than TMP, or because no license is required;

(B) A U.S. employer of individuals who are not U.S. persons must demonstrate and document for recordkeeping purposes the reason that the technology is needed by such employees in their temporary business activities abroad on behalf of the U.S. person employer, prior to using this paragraph (a)(3). This documentation must be created and maintained in accordance with the recordkeeping requirements of part 762 of the EAR; *and*

(C) The U.S. person must retain supervision over the technology that has been authorized for export or reexport under these or other provisions.

(ii) The exporting, reexporting, or transferring party and the recipient of the technology must take security precautions to protect against unauthorized release of the technology while the technology is being shipped or transmitted and used overseas. Examples of security precautions to help prevent unauthorized access include the following:

(A) Use of secure connections, such as Virtual Private Network connections, when accessing IT networks for email and other business activities that involve the transmission and use of the technology authorized under this license exception;

(B) Use of password systems on electronic devices that will store the technology authorized under this license exception; and

(C) Use of personal firewalls on electronic devices that will store the technology authorized under this license exception.

(iii) Technology authorized under these provisions may not be used for foreign production purposes or for technical assistance unless authorized by BIS.

(iv) Encryption technology controlled by ECCN 5E002 is ineligible for this license exception.

(4) *Kits consisting of replacement parts.* Kits consisting of replacement parts may be exported, reexported, or transferred (in-country) to all destinations except Country Group E:2 (see Supplement No. 1 to part 740), provided that:

(i) The parts would qualify for shipment under paragraph (a)(4)(iii) of this section if exported as one-for-one replacements;

(ii) The kits remain under effective control of the exporter or an employee of the exporter; and

(iii) All parts in the kit are returned, except that one-for-one replacements may be made in accordance with the requirements of License Exception RPL and the defective parts returned (see ''parts'', § 740.10(a) of this part).

(5) *Exhibition and demonstration.* This paragraph (a)(5) authorizes exports, reexports, and transfers (in-country) of commodities and software for exhibition or demonstration in all destinations except Country Group E:1 (see Supplement No. 1 to this part) provided that the exporter maintains ownership of the commodities and software while they are abroad and provided that the exporter, an employee of the exporter, or the exporter's designated sales representative retains ''effective control'' over the commodities and software while they are abroad. The commodities and software may not be used when abroad for more than the minimum extent required for effective demonstration. The commodities and software may not be exhibited or demonstrated at any one site more than 120 days after installation and debugging, unless authorized by BIS. However, before or after an exhibition or demonstration, pending movement to another site, return to the United States or the foreign reexporter, or BIS approval for other disposition, the commodities and software may be placed in a bonded warehouse or a storage facility provided that the exporter retains ''effective control'' over their disposition. The export documentation for this type of transaction must show the exporter as ultimate consignee, in care of the person who will have control over the commodities and software abroad.

(6) *Inspection and calibration.* Commodities to be inspected, tested, calibrated, or repaired abroad may be exported and reexported under this paragraph (a)(6) to all destinations except Country Group E:1.

(7) *Containers.* Containers for which another license exception is not available and that are necessary for shipment of commodities may be exported, reexported, and transferred (in-country) under this paragraph (a)(7). However, this paragraph does not authorize the export of the container's contents, which, if not exempt from licensing, must be separately authorized for export under either a license exception or a license.

(8) *Assembly in Mexico.* Commodities may be exported to Mexico under Customs entries that require return to the United States after processing, assembly, or incorporation into end products by companies, factories, or facilities participating in Mexico's in-

bond industrialization program (Maquiladora) under this paragraph (a)(8), provided that all resulting end-products (or the commodities themselves) are returned to the United States.

(9) *News media.* (i) Commodities necessary for news-gathering purposes (and software necessary to use such commodities) may be temporarily exported or reexported for accredited news media personnel (*i.e.,* persons with credentials from a news gathering or reporting firm) to Cuba, North Korea, Sudan, or Syria (see Supplement No. 1 to part 740) if the commodities:

(A) Are retained under ''effective control'' of the exporting news gathering firm in the country of destination;

(B) Remain in the physical possession of the news media personnel in the country of destination. The term physical possession for purposes of this paragraph (a)(9) means maintaining effective measures to prevent unauthorized access (e.g., securing equipment in locked facilities or hiring security guards to protect the equipment); and

(C) Are removed with the news media personnel at the end of the trip.

(ii) When exporting under this paragraph (a)(9) from the United States, the exporter must email a copy of the packing list or similar identification of the exported commodities, to *bis.compliance@bis.doc.gov* specifying the destination and estimated dates of departure and return. The Office of Export Enforcement (OEE) may spot check returns to assure that the provisions of this paragraph (a)(9) are being used properly.

(iii) Commodities or software necessary for news-gathering purposes that accompany news media personnel to all other destinations shall be exported or reexported under paragraph (a)(1), *tools of trade,* of this section if owned by the news gathering firm, or if they are personal property of the individual news media personnel. Note that paragraphs (a)(1), *tools of trade* and (a)(9), *news media,* of this section do not preclude independent accredited contract personnel, who are under control of news gathering firms while on assignment, from using these provisions, provided that the news gathering firm designates an employee of the contract firm to be responsible for the equipment.

(10) *Temporary exports to a U.S. person's foreign subsidiary, affiliate, or facility abroad.* Components, parts, tools, accessories, or test equipment exported by a U.S. person to a subsidiary, affiliate, or facility owned or controlled by the U.S. person, if the components, parts, tools, accessories, or test equipment are to be used to manufacture, assemble, test, produce, or modify items, provided that such components, parts, tools, accessories or test equipment are not transferred (in-country) or reexported from such subsidiary, affiliate, or facility, alone or incorporated into another item, without prior authorization by BIS.

(11) *U.S. persons.* For purposes of this section 740.9, a U.S. person is defined as follows: an individual who is a citizen of the United States, an individual who is a lawful permanent resident as defined by 8 U.S.C. 1101(a)(2) or an individual who is a protected individual as defined by 8 U.S.C. 1324b(a)(3). U.S. person also means any juridical person organized under the laws of the United States, or any jurisdiction within the United States (*e.g.,* corporation, business association, partnership, society, trust, or any other entity, organization or group that is incorporated to do business in the United States).

(12) *Body armor.* (i) *Exports to countries not identified in § 740.2(a)(12).* U.S. persons may temporarily export one set of body armor classified under ECCN 1A613.d to countries not identified in § 740.2(a)(12), provided that:

(A) A declaration by the U.S. person and an inspection by a customs officer are made;

(B) The body armor is with the U.S. person's baggage or effects, whether accompanied or unaccompanied (but not mailed); and

(C) The body armor is for that person's exclusive use and not for reexport or other transfer of ownership.

(ii) *Exports to Afghanistan or Iraq.* U.S. persons may temporarily export one set of body armor classified under ECCN 1A613.d to Afghanistan or Iraq, provided that:

(A) A declaration by the U.S. person and an inspection by a customs officer are made;

(B) The body armor is with the U.S. person's baggage or effects, whether accompanied or unaccompanied (but not mailed);

(C) The body armor is for that person's exclusive use and not for reexport or other transfer of ownership; and

(D) For temporary exports to Iraq, the U.S. person utilizing the license exception is either a person affiliated with the U.S. Government traveling on official business or is a person not affiliated with the U.S. Government but traveling to Iraq under a direct authorization by the Government of Iraq and engaging in humanitarian activities for, on behalf of, or at the request of the Government of Iraq.

(iii) Body armor controlled under ECCN 1A005 is eligible for this license exception under paragraph (a)(1) of this section.

(13) *Destinations.* Destination restrictions apply to temporary exports to and for use on any vessel, aircraft or territory under ownership, control, lease, or charter by any country specified in any authorizing paragraph of this section, or any national thereof.

(14) *Return or disposal of items.* All items exported, reexported, or transferred (in-country) under these provisions must, if not consumed or destroyed in the normal course of authorized temporary use abroad, be returned as soon as practicable but no later than one year after the date of export, reexport, or transfer to the United States or other country from which the items were so transferred. Items not returned shall be disposed of or retained in one of the following ways:

(i) *Permanent export or reexport.* An exporter or reexporter who wants to sell or otherwise dispose of the items abroad, except as permitted by this or other applicable provision of the EAR, must apply for a license in accordance with §§ 748.1, 748.4 and 748.6 of the EAR. (Part 748 of the EAR contains for more information about license applications.) The application must be supported by any documents that would be required in support of an application for export license for shipment of the same items directly from the United States to the proposed destination.

(ii) *Use of a license.* An outstanding license may also be used to dispose of items covered by the provisions of this paragraph (a), provided that the outstanding license authorizes direct shipment of the same items to the same new ultimate consignee in the new country of destination.

(iii) *Authorization to retain item abroad beyond one year.* An exporter who wants to retain an item abroad beyond one year must apply for a license in accordance with §§ 748.1, 748.4 and 748.6 of the EAR to BIS 90 days prior to the expiration of the one-year period. The application must include the name and address of the exporter, the date the items were exported, a brief product description, and the justification for the extension. If BIS approves the extension, the exporter will receive authorization for a one-time extension not to exceed six months. BIS normally will not allow an extension for items that have been abroad more than one year, nor will a second six-month extension be authorized. Any request for retaining the items abroad for a period

exceeding 18 months must be made in accordance with the requirements of paragraph (a)(14)(i) of this section.

(b) Exports of items temporarily in the United States.

Note 1 to paragraph (b): *A commodity withdrawn from a bonded warehouse in the United States under a 'withdrawal for export' customs entry is considered as 'moving in transit'. It is not considered as 'moving in transit' if it is withdrawn from a bonded warehouse under any other type of customs entry or if its transit has been broken for a processing operation, regardless of the type of customs entry.*

Note 2 to paragraph (b): *Items shipped on board a vessel or aircraft and passing through the United States from one foreign country to another may be exported without a license provided that (a) while passing in transit through the United States, they have not been unladen from the vessel or aircraft on which they entered, and (b) they are not originally manifested to the United States.*

Note 3 to paragraph (b): *A shipment originating in Canada or Mexico that incidentally transits the United States en route to a delivery point in the same country does not require a license.*

Note 4 to paragraph (b): *A shipment by air or vessel from one location in the United States to another location in the United States via a foreign country does not require a license.*

Note 5 to paragraph (b): *All references to the United States Munitions List (''USML'') in this rule are to the list of defense articles that are controlled for purposes of export or temporary import pursuant to the International Traffic in Arms Regulations (''ITAR''), 22 CFR Parts 120 et seq., and not to the list of defense articles on the USML that are controlled by the Bureau of Alcohol, Tobacco, Firearms and Explosives (ATF) for purpose of permanent import under its regulations at 27 CFR Part 447. Pursuant to section 38(a)(1) of the Arms Export Control Act (AECA), 22 U.S.C. § 2779, all defense articles controlled for export or import are part of the ''USML'' under the AECA. For the sake of clarity, the list of defense articles controlled by ATF for purposes of permanent import are on the United States Munitions Import List (USMIL). The transfer of defense articles from the ITAR's USML to the EAR's CCL for purposes of export controls does not affect the list of defense articles controlled on the USMIL under the AECA for purposes of permanent import controls.*

(1) *Items moving in transit through the United States.* Subject to the following conditions, the provisions of paragraph (b)(1) authorize export of items moving in transit through the United States under a Transportation and Exportation (T.&E.) customs entry or an Immediate Exportation (I.E.) customs entry made at a U.S. Customs and Border Protection Office.

(i) Items controlled for national security (NS) reasons, nuclear proliferation (NP) reasons, or chemical and biological weapons (CB) reasons may not be exported to Country Group D:1, 2, or 3 (see Supplement No. 1 to part 740), respectively, under this paragraph (b)(1).

(ii) Items may not be exported to Country Group E:1 under this section.

(iii) The following may *not* be exported from the United States under this paragraph (b)(1):

(A) Commodities shipped to the United States under an International Import Certificate, Form BIS–645P;

(B) Chemicals controlled under ECCN 1C350; or

(C) Horses for export by sea (refer to short supply controls in part 754 of the EAR).

(iv) The authorization to export in paragraph (b)(1) shall apply to all shipments from Canada moving in transit through the United States to any foreign destination, regardless of the nature of the commodities or software or their origin, notwithstanding any other provision of paragraph (b)(1).

(2) *Items imported for marketing, or for display at U.S. exhibitions or trade fairs.* Subject to the following conditions, the provisions of this paragraph (b)(2) authorize the export of items that were imported into the United States for marketing, or for display at an exhibition or trade fair *and* were either entered under bond or permitted temporary free import under bond providing for their export and are being exported in accordance with the terms of that bond.

(i) Items may be exported to the country from which imported into the United States. However, items originally imported from Cuba may not be exported unless the U.S. Government had licensed the import from that country.

(ii) Items may be exported to any destination other than the country from which imported except:

(A) Items imported into the United States under an International Import Certificate;

(B) Exports to Country Group E:1 (see Supplement No. 1 to part 740); or

(C) Exports to Country Group D:1, 2, or 3 (see Supplement No. 1 to part 740) of items controlled for national security (NS) reasons, nuclear nonproliferation (NP) reasons, or chemical and biological weapons (CB) reasons, respectively.

(3) *Return of foreign-origin items.* A foreign-origin item may be returned under this license exception to the country from which it was imported if its characteristics and capabilities have not been enhanced while in the United States, except that no foreign-origin items may be returned to Cuba.

(4) *Return of shipments refused entry.* Shipments of items refused entry by the U.S. Customs and Border Protection, the Food and Drug Administration, or other U.S. Government agency may be returned to the country of origin, except to:

(i) A destination in Cuba; or

(ii) A destination from which the shipment has been refused entry because of the Foreign Assets Control Regulations of the Treasury Department, unless such return is licensed or otherwise authorized by the Treasury Department, Office of Foreign Assets Control (31 CFR parts 500–599).

10. Section 740.10 is amended:

a. By removing and reserving paragraph (b)(2)(iii);

b. By removing and reserving paragraph (b)(3)(ii); and

c. By revising paragraph (a)(3)(ii), to read as follows:

§ 740.10 License Exception Servicing and replacement of parts and equipment (RPL).

(a) * * *

(3) * * *

(ii) No ''parts,'' ''components,'' ''accessories,'' or ''attachments'' may be exported to be held abroad as spares for future use, unless the value of the ''parts,'' ''components,'' ''accessories,'' or ''attachments'' is less than $500 per shipment and no more than 24 shipments per year are made to each approved end user. Replacements may be exported to replace spares that were authorized to accompany the export of equipment or other end items, as those spares are used in the repair of the equipment or other end item. This allows maintenance of the stock of spares at a consistent level as the parts, components, accessories, or attachments are used.

* * * * *

11. Section 740.11 is revised to read as follows:

§ 740.11 Governments, International Organizations, International Inspections under the Chemical Weapons Convention, and the International Space Station (GOV).

This License Exception authorizes exports and reexports for international nuclear safeguards; U.S. government agencies or personnel; agencies of cooperating governments; international inspections under the Chemical Weapons Convention; and the International Space Station.

(a) *International Safeguards.* (1) *Scope.* The International Atomic Energy Agency (IAEA) is an international organization that establishes and administers safeguards, including Additional Protocols, designed to ensure that special nuclear materials

and other related nuclear facilities, equipment, and material are not diverted from peaceful purposes to non-peaceful purposes.

Euratom is an international organization of European countries with headquarters in Luxembourg. Euratom establishes and administers safeguards designed to ensure that special nuclear materials and other related nuclear facilities, equipment, and material are not diverted from peaceful purposes to non-peaceful purposes. This paragraph (a) authorizes exports and reexports of commodities or software to the IAEA and Euratom, and reexports by IAEA and Euratom for official international safeguard use, as follows:

(i) Commodities or software consigned to the IAEA at its headquarters in Vienna, Austria or its field offices in Toronto, Ontario, Canada or in Tokyo, Japan for official international safeguards use.

(ii) Commodities or software consigned to the Euratom Safeguards Directorate in Luxembourg, Luxembourg for official international safeguards use.

(iii) Commodities or software consigned to IAEA or Euratom may be reexported to any country for IAEA or Euratom international safeguards use provided that IAEA or Euratom maintains control of or otherwise safeguards the commodities or software and returns the commodities or software to the locations described in paragraphs (a)(1)(i) and (a)(1)(ii) of this section when they become obsolete, are no longer required, or are replaced.

(iv) Commodity or software shipments may be made by persons under direct contract with IAEA or Euratom, or by Department of Energy National Laboratories as directed by the Department of State or the Department of Energy.

(v) The monitoring functions of IAEA and Euratom are not subject to the restrictions on prohibited safeguarded nuclear activities described in § 744.2(a)(3) of the EAR.

(vi) When commodities or software originally consigned to IAEA or Euratom are no longer in IAEA or Euratom official safeguards use, such commodities may be disposed of by destruction or by reexport or transfer in accordance with the EAR.

(2) *Restrictions.* (i) Items on the Sensitive List (see Supplement No. 6 to part 774) may not be exported or reexported under this paragraph (a), *except* to the countries listed in § 740.20(c)(1) (License Exception STA).

(ii) Items on the Very Sensitive List (see Supplement No. 7 to part 774) may not be exported or reexported under this paragraph (a).

(iii) Encryption items controlled for EI reasons under ECCNs 5A002, 5D002, or 5E002 may not be exported or reexported under this paragraph (a).

(iv) Without prior authorization from the Bureau of Industry and Security, nationals of countries in Country Group E:1 may not physically or computationally access computers that have been enhanced by ''electronic assemblies,'' which have been exported or reexported under License Exception GOV and have been used to enhance such computers by aggregation of processors so that the APP of the aggregation exceeds the APP parameter set forth in ECCN 4A003.b. of the Commerce Control List in Supplement No. 1 to part 774 of the EAR.

(v) ''600 series'' items may not be exported or reexported under this paragraph (a), *except* to the countries listed in § 740.20(c)(1) (License Exception STA).

(iv) Technology or software prohibited by Supplement No. 4 to this part may not be exported or reexported under this paragraph (a).

(b) *United States Government.* (1) *Scope.* The provisions of paragraph (b) authorize exports and reexports to personnel and agencies of the U.S. Government and certain exports by the Department of Defense. ''Agency of the U.S. Government'' includes all civilian and military departments, branches, missions, government-owned corporations, and other agencies of the U.S. Government, but does not include such national agencies as the American Red Cross or international organizations in which the United States participates such as the Organization of American States. Therefore, shipments may not be made to these non-government national or international agencies, except as provided in paragraph (b)(2)(i) of this section for U.S. representatives to these organizations.

(2) *Eligibility.* (i) *Items for personal use by personnel and agencies of the U.S. Government.* This provision is available for items in quantities sufficient only for the personal use of members of the U.S. Armed Forces or civilian personnel of the U.S. Government (including U.S. representatives to public international organizations), and their immediate families and household employees. Items for personal use include household effects, food, beverages, and other daily necessities.

(ii) *Exports, reexports, and transfers made by or consigned to a department or agency of the U.S. Government.* This paragraph authorizes exports, reexports, and transfers of items when made by or consigned to a department or agency of the U.S. Government solely for its official use or for carrying out any U.S. Government program with foreign governments or international organizations that is authorized by law and subject to control by the President by other means. This paragraph does not authorize a department or agency of the U.S. Government to make any export, reexport, or transfer that is otherwise prohibited by other administrative provisions or by statute. Contractor Support Personnel of a department or agency of the U.S. Government are eligible for this authorization when in the performance of their duties pursuant to the applicable contract or other official duties. ''Contractor Support Personnel'' for the purpose of this provision means those persons who provide administrative, managerial, scientific or technical support under contract to a U.S. Government department or agency (e.g., contractor employees of Federally Funded Research Facilities or Systems Engineering and Technical Assistance contractors). This authorization is not available when a department or agency of the U.S. Government acts as a transmittal agent on behalf of a non-U.S. Government person, either as a convenience or in satisfaction of security requirements.

(iii) *Exports, reexports and transfers made for or on behalf of a department or agency of the U.S. Government.*

(A) This paragraph authorizes exports, reexports and transfers of items solely for use by a department or agency of the U.S. Government, when:

(*1*) The items are destined to a U.S. person; and

(*2*) The item is exported, reexported, or transferred pursuant to a contract between the exporter and a department or agency of the U.S. Government;

(B) This paragraph authorizes exports, reexports, and transfers of items to implement or support any U.S. Government cooperative program, project, agreement, or arrangement with a foreign government or international organization or agency that is authorized by law and subject to control by the President by other means, when:

(*1*) The agreement is in force and in effect, or the arrangement is in operation;

(*2*) The exporter, reexporter, or transferor obtains a written authorization from the Secretary or agency head of the U.S. Government department or agency responsible for the program, agreement, or arrangement, or his or her designee, authorizing the exporter, reexporter, or transferor to use this license exception. The written authorization must include the scope of

items to be shipped under this license exception; the end users and consignees of the items; and any restrictions on the export, reexport, or transfer (including any restrictions on the foreign release of technology);

(*3*) The exporter, reexporter, or transferor has a contract with a department or agency of the U.S. Government for the provision of the items in furtherance of the agreement, or arrangement; and

(*4*) The items being exported, reexported, or transferred are not controlled for CW or CB reasons;

(C) This paragraph authorizes the temporary export, reexport, or transfer of an item in support of any foreign assistance or sales program authorized by law and subject to the control of the President by other means, when:

(*1*) The item is provided pursuant to a contract between the exporter and a department or agency of the U.S. Government; and

(*2*) The exporter, reexporter, or transferor obtains a written authorization from the Secretary or agency head of the U.S. Government department or agency responsible for the program, or his or her designee, authorizing the exporter, reexporter, or transferor to use this license exception. The written authorization must include the scope of items to be shipped under this license exception; the end users and consignees of the items; and any restrictions on the export, reexport, or transfer (including any restrictions on the foreign release of technology);

(D) This paragraph authorizes the export of commodities or software at the direction of the U.S. Department of Defense for an end use in support of an Acquisition and Cross Servicing Agreement (ACSA), when:

(*1*) The ACSA is between the U.S. Government and a foreign government or an international organization and is in force and in effect;

(*2*) The exporter, reexporter, or transferor has a contract with the department or agency of the U.S. government in furtherance of the ACSA; and

(*3*) The exporter, reexporter, or transferor obtains a written authorization from the Secretary or agency head of the U.S. Government department or agency responsible for the ACSA, or his or her designee, authorizing the exporter, reexporter, or transferor to use this license exception. The written authorization must include the scope of items to be shipped under this license exception; the end-users and consignees of the items; and any restrictions on the export, reexport, or transfer;

(E) This paragraph authorizes the export, reexport, or transfer of an item to implement or support a program directed by the Secretary of Defense, with the concurrence of the Secretary of State, to build the capacity of: A foreign government's national military forces in order for that country to conduct counterterrorist operations or participate in or support military and stability operations in which the U.S. Armed Forces are a participant; or a foreign country's maritime security forces to conduct counterterrorism operations, when:

(*1*) The program is in operation;

(*2*) The exporter, reexporter, or transferor has a contract with a department or agency of the U.S. Government in furtherance of the program; and

(*3*) The exporter, reexporter, or transferor obtains a written authorization from the Secretary or agency head of the U.S. Government department or agency authorized to implement the program, or his or her designee, authorizing the exporter, reexporter, or transferor to use this license exception. The written authorization must also include the scope of items to be shipped under this license exception; the end users and consignees of the items; and any restrictions on the export, reexport, or transfer (including any restrictions on the foreign release of technology);

(F) This paragraph authorizes the export, reexport, or transfer of Government Furnished Equipment (GFE) made by a U.S. Government contractor, when:

(*1*) The GFE will not be provided to any foreign person; and

(*2*) The export, reexport, or transfer is pursuant to a contract with a department or agency of the U.S. Government.

(G) *Electronic Export Information.* (1) Electronic Export Information (EEI) must be filed in the Automated Export System (AES) for any export made pursuant to paragraph (b)(iii) of this section. The EEI must identify License Exception GOV as the authority for the export and indicate that the applicant has received the relevant documentation from the contracting U.S. Government department, agency, or service. The Internal Transaction Number must be properly annotated on shipping documents (bill of lading, airway bill, other transportation documents, or commercial invoice) and shipment documents must include the following statement, ''Property of [insert U.S. Government department, agency, or service]. Property may not enter the trade of the country to which it is shipped. Authorized under License Exception GOV. U.S. Government point of contact: [Insert name and telephone number].''

(H) The exporter, reexporter, or transferor must obtain an authorization, if required, before any item previously exported, reexported, or transferred under this paragraph is resold, transferred, reexported, transshipped, or disposed of to an end user for any end use, or to any destination other than as authorized by this paragraph (*e.g.,* property disposal of surplus defense articles outside of the United States), unless:

(*1*) The transfer is pursuant to a grant, sale, lease, loan, or cooperative project under the Arms Export Control Act or the Foreign Assistance Act of 1961, as amended; or

(*2*) The item has been destroyed or rendered useless beyond the possibility of restoration.

(iv) *Items exported at the direction of the U.S. Department of Defense.* This paragraph authorizes technology to be released pursuant to an official written request or directive from the U.S. Department of Defense.

(v) This paragraph authorizes items sold, leased, or loaned by the U.S. Department of Defense to a foreign country or international organization pursuant to the Arms Export Control Act or the Foreign Assistance Act of 1961 when the items are delivered to representatives of such a country or organization in the United States and exported on a military aircraft or naval vessel of that government or organization or via the Defense Transportation Service.

(vi) This paragraph authorizes transfer of technology in furtherance of a contract between the exporter and an agency of the U.S. government, if the contract provides for such technology and the technology is not ''development'' or ''production'' technology for ''600 series'' items.

Note to paragraph (b)(2) to this section: *Foreign Military Sales (FMS).* The export of items subject to the EAR that are sold, leased, or loaned by the Department of Defense to a foreign country or international organization must be made in accordance with the FMS Program carried out under the Arms Export Control Act.

(c) *Cooperating Governments.* (1) *Scope.* The provisions of paragraph (c) authorize exports and reexports of the items listed in paragraph (c)(2) of this section to agencies of cooperating governments. ''Agency of a cooperating government'' includes all civilian and military departments, branches, missions, and other governmental agencies of a cooperating national

government. Cooperating governments are the national governments of countries listed in Country Group A:1 (see Supplement No. 1 to part 740) and the national governments of Argentina, Austria, Finland, Hong Kong, Ireland, Korea (Republic of), New Zealand, Singapore, Sweden, Switzerland and Taiwan.

(2) *Eligibility.* (i) *Items for official use within national territory by agencies of cooperating governments.* This license exception is available for all items consigned to and for the official use of any agency of a cooperating government within the territory of any cooperating government, except items excluded by paragraph (c)(3) of this section.

(ii) *Diplomatic and consular missions of a cooperating government.* This license exception is available for all items consigned to and for the official use of a diplomatic or consular mission of a cooperating government located in any country in Country Group B (see Supplement No. 1 to part 740), except items excluded by paragraph (c)(3) of this section.

(3) *Exclusions.* The following items may not be exported or reexported under this paragraph (c):

(i) Items on the Sensitive List (see Supplement No. 6 to part 774), *except* to the countries listed in § 740.20(c)(1) (License Exception STA);

(ii) Items on the Very Sensitive List (see Supplement No. 7 to part 774);

(iii) Encryption items controlled for EI reasons under ECCNs 5A002, 5D002, or 5E002;

(iv) Regional stability items controlled under Export Control Classification Numbers (ECCNs) 6A002.a.1.c, 6E001 ''technology'' according to the General Technology Note for the ''development'' of equipment in 6A002.a.1.c, and 6E002 ''technology'' according to the General Technology Note for the ''production'' of equipment in 6A002.a.1.c.;

(v) ''600 series'' items, *except* to the countries listed in § 740.20(c)(1) (License Exception STA);

(vi) Items controlled for nuclear nonproliferation (NP) reasons;

(vii) Technology or software prohibited by Supplement No. 4 to this part;

(viii) Items listed as not eligible for STA in § 740.20(b)(2)(ii).

(4) *Reporting requirements.* See § 743.1 of the EAR for reporting requirements for exports of certain items under this paragraph (c)(2).

(d) *International inspections under the Chemical Weapons Convention (CWC or Convention).*

(1) The Organization for the Prohibition of Chemical Weapons (OPCW) is an international organization that establishes and administers an inspection and verification regime under the Convention designed to ensure that certain chemicals and related facilities are not diverted from peaceful purposes to non-peaceful purposes. This paragraph (d) authorizes exports and reexports to the OPCW and exports and reexports by the OPCW for official international inspection and verification use under the terms of the Convention as follows:

(i) Commodities and software consigned to the OPCW at its headquarters in The Hague for official international OPCW use for the monitoring and inspection functions set forth in the Convention, and technology relating to the maintenance, repair, and operation of such commodities and software. The OPCW must maintain effective control of such commodities, software and technology.

(ii) Controlled technology relating to the training of the OPCW inspectorate.

(iii) Controlled technology relating to a CWC inspection site, including technology released as a result of:

(A) Visual inspection of U.S.-origin equipment or facilities by foreign nationals of the inspection team;

(B) Oral communication of controlled technology to foreign nationals of the inspection team in the U.S. or abroad; and

(C) The application to situations abroad of personal knowledge or technical experience acquired in the U.S.

(2) *Exclusions.* The following items may not be exported or reexported under the provisions of this paragraph (d):

(i) Inspection samples collected in the U.S. pursuant to the Convention;

(ii) Commodities and software that are no longer in OPCW official use. Such items must be transferred in accordance with the EAR.

(iii) ''600 series'' items, *except* to the countries listed in § 740.20(c)(1) (License Exception STA).

(iv) Technology or software prohibited by Supplement No. 4 to this part.

(3) *Confidentiality.* The application of the provisions of this paragraph (d) is subject to the condition that the confidentiality of business information is strictly protected in accordance with applicable provisions of the EAR and other U.S. laws regarding the use and transfer of U.S. goods and services.

(4) *Restrictions.* Without prior authorization from the Bureau of Industry and Security, nationals of countries in Country Group E:1 may not physically or computationally access computers that have been enhanced by ''electronic assemblies,'' which have been exported or reexported under License Exception GOV and have been used to enhance such computers by aggregation of processors so that the APP of the aggregation exceeds the APP parameter set forth in ECCN 4A003.b. of the Commerce Control List in Supplement No. 1 to part 774 of the EAR.

(e) *International Space Station (ISS).* (1) *Scope.* The ISS is a research facility in a low-Earth orbit approximately 190 miles (350 km) above the surface of the Earth. The ISS is a joint project among the space agencies of the United States, Russia, Japan, Canada, Europe and Italy. This paragraph (e) authorizes exports and reexports required on short notice of certain commodities subject to the EAR that are classified under ECCN 9A004 to launch sites for supply missions to the ISS.

(2) *Eligible commodities.* Any commodity subject to the EAR that is classified under ECCN 9A004 and that is required for use on the ISS on short notice.

Note 1 to paragraph (e)(2): *This license exception is not available for the export or reexport of parts and components to overseas manufacturers for the purpose of incorporation into other items destined for the ISS.*

Note 2 to paragraph (e)(2): *For purposes of this paragraph (e), 'short notice' means the exporter is required to have a commodity manifested and at the scheduled launch site for hatch-closure (final stowage) no more than forty-five (45) days from the time the exporter or reexporter received complete documentation. 'Complete documentation' means the exporter or reexporter received the technical description of the commodity and purpose for use of the commodity on the ISS. 'Hatch-closure (final stowage)' means the final date specified by a launch provider by which items must be at a specified location in a launch country in order to be included on a mission to the ISS. The exporter or reexporter must receive the notification to supply the commodity for use on the ISS in writing. That notification must be kept in accordance with paragraph (e)(8) of this section and the Recordkeeping requirements in part 762 of the EAR.*

(3) *Eligible destinations.* Eligible destinations are France, Japan, Kazakhstan, and Russia. To be eligible, a destination needs to have a launch for a supply mission to the ISS scheduled by a country participating in the ISS.

(4) *Requirement for commodities to be launched on an eligible space launch vehicle (SLV).* Only commodities that will be delivered to the ISS using United States, Russian, ESA (French), or Japanese space launch vehicles (SLVs) are eligible under this authorization. Commodities to be delivered to the ISS

using SLVs from any other countries are excluded from this authorization.

(5) *Authorizations.* (i) *Authorization to retain commodity at or near launch site for up to six months.* If there are unexpected delays in a launch schedule for reasons such as mechanical failures in a launch vehicle or weather, commodities exported or reexported under this paragraph (e) may be retained at or near the launch site for a period of six (6) months from the time of initial export or reexport before the commodities must be destroyed, returned to the exporter or reexporter, or be the subject of an individually validated license request submitted to BIS to authorize further disposition of the commodities.

(ii) *Authorization to retain commodity abroad at launch country beyond six months.* If, after the commodity is exported or reexported under this authorization, a delay occurs in the launch schedule that would exceed the 6-month deadline in paragraph (e)(5)(i) of this section, the exporter or reexporter or the person in control of the commodities in the launch country may request a one-time 6-month extension by submitting written notification to BIS requesting a 6-month extension and noting the reason for the delay. If the requestor is not contacted by BIS within 30 days from the date of the postmark of the written notification and if the notification meets the requirements of this subparagraph, the request is deemed granted. The request must be sent to BIS at the address listed in part 748 of the EAR and should include the name and address of the exporter or reexporter, the name and address of the person who has control of the commodity, the date the commodities were exported or reexported, a brief product description, and the justification for the extension. To retain a commodity abroad beyond the 6-month extension period, the exporter, reexporter or person in control of the commodity must request authorization by submitting a license application in accordance with §§ 748.1, 748.4 and 748.6 of the EAR to BIS 90 days prior to the expiration of the 6-month extension period.

(iii) *Items not delivered to the ISS because of a failed launch.* If the commodities exported or reexported under this paragraph (e) of this section are not delivered to the ISS because a failed launch causes the destruction of the commodity prior to its being delivered, exporters and reexporters must make note of the destruction of the commodities in accordance with the recordkeeping requirements under paragraph (e)(8)(ii) of this section and part 762 of the EAR.

(6) *Reexports to an alternate launch country.* If a mechanical or weather related issue causes a change from the scheduled launch country to another foreign country after a commodity was exported or reexported, then that commodity may be subsequently reexported to the new scheduled launch country, provided all of the terms and conditions of paragraph (e) of this section are met, along with any other applicable EAR provisions. In such instances, the 6-month time limitation described in paragraph (e)(5)(i) of this section would start over again at the time of the subsequent reexport transaction. Note that if the subsequent reexport may be made under the designation No License Required (NLR) or some other authorization under the EAR, a reexporter does not need to rely on the provisions contained in this paragraph (e).

(7) *Eligible recipients.* Only persons involved in the launch of commodities to the ISS may receive and have access to commodities exported or reexported pursuant to this paragraph (e), except that:

(i) No commodities may be exported, reexported, or transferred (in-country) under paragraph (e) to any national of an E:1 country listed in Supplement No. 1 to part 740 of the EAR, and

(ii) No person may receive commodities authorized under paragraph (e) of this section who is subject to an end-user or end-use control described in part 744 of the EAR, including the entity list in Supplement No. 4 to part 744.

(8) *Recordkeeping requirements.* Exporters and reexporters must maintain records regarding exports or reexports made using this paragraph (e) of this section as well as any other applicable recordkeeping requirements under part 762 of the EAR.

(i) Exporters and reexporters must retain a record of the initial written notification they received requesting these commodities be supplied on short notice for a supply mission to the ISS, including the date the exporter or reexporter received complete documentation (i.e., the day on which the 45-day clock begins).

(ii) Exporters and reexporters must maintain records of the date of any exports or reexports made using this paragraph (e) and the date on which the commodities were launched into space for delivery to the ISS. If the commodities are not delivered to the ISS because of a failed launch whereby the item is destroyed prior to being delivered to the ISS, this must be noted for recordkeeping purposes.

(iii) The return or destruction of defective or worn out parts or components is not required. However, if defective or worn out parts or components originally exported or reexported pursuant to this paragraph (e) are returned from the ISS, then those parts and components may be either: Returned to the original country of export or reexport; destroyed; or reexported or transferred (in-country) to a destination that has been designated by NASA for conducting a review and analysis of the defective or worn part or component. Documentation for this activity must be kept for recordkeeping purposes. No commodities that are subject to the EAR may be returned, under the provisions of this paragraph, to a country listed in Country Group E:1 in Supplement No. 1 to part 740 or to any person if that person is subject to an end-user or end-use control described in part 744 of the EAR. For purposes of paragraph (e) of this section, a 'defective or worn out' part or component is a part or component that no longer performs its intended function.

12. Section 740.13 is amended by adding a sentence to paragraph (a)(1), redesignating paragraph (f) as paragraph (h), and by adding new paragraphs (f) and (g) to read as follows:

§ 740.13 Technology and Software—Unrestricted (TSU).

(a) * * * This paragraph (a) authorizes training, provided the training is limited to the operation, maintenance and repair technology identified in this paragraph.

* * * * *

(f) *Release of technology and source code in the U.S. by U.S. universities to their bona fide and full time regular employees.*

(1) *Scope.* This paragraph authorizes the release in the United States of ''technology'' and source code that is subject to the EAR by U.S. universities to foreign persons who are their bona fide and full time regular employees.

(2) *Eligible ''technology''and source code.* Any ''technology'' or source code that is subject to the EAR may be released, except for ''technology'' or source code that is subject to a missile technology or EI reason for control or otherwise restricted from the use of license exceptions under § 740.2 of the EAR.

(3) *Eligible foreign nationals (i.e., bona fide and full time regular employees of U.S. universities).* This exception is only available if:

(i) The employee's permanent abode throughout the period of employment is in the U.S.;

(ii) The employee is not a national of a country subject to a U.S. arms embargo (see § 740.2(a)(12)); and

(iii) The university informs the individual in writing that the ''technology'' or source code may not be transferred to other foreign persons without prior U.S. Government authorization.

(4) *Exclusions.* (i) No ''technology'' or source code may be released to a foreign national for purposes of establishing or producing items subject to the EAR;

(ii) No ''technology'' or source code may be released to a foreign person subject to a part 744 end-use or end-user control or where the release would otherwise be inconsistent with part 744; and

(iii) No ''technology'' or source code controlled for ''EI'' (encryption) or ''MT'' (Missile Technology) reasons may be released under this paragraph (f).

(g) *Copies of technology previously authorized for export to same recipient.* This paragraph authorizes the export, reexport, or transfer (in-country) of copies of technology previously authorized for export, reexport, or in-country transfer to the same recipient. This paragraph also authorizes the export, reexport, or transfer (in-country) of revised copies of such technology provided the following four conditions are met:

(1) The item that the technology pertains to is the identical item;

(2) The revisions to the technology are solely editorial and do not add to the content of technology previously exported, reexported, or transferred (in-country) or authorized for export, reexport, or transfer (in-country) to the same recipient;

(3) The same recipient is not currently subject to an end-use control under the EAR (e.g., being subject to a Denial Order or Listed on the Entity List in Supplement No. 4 to part 744); and

(4) The exporter, reexporter, or transferor has reason to believe the same recipient has used the technology in accordance with the original authorization.

13. Section 740.20 is revised to read as follows:

§ 740.20 License Exception Strategic Trade Authorization (STA).

* * * * *

(c) * * *

Note 2 to paragraph (c). License Exception STA under § 740.20(c)(1) may be used to authorize the export, reexport, or transfer (in-country) of ''600 series'' items only if the purchaser, intermediate consignee, ultimate consignee, and end user have previously been approved on a license issued by BIS or the Directorate of Defense Trade Controls (DDTC), U.S. Department of State.

* * * * *

(d) * * *

(1) * * *

(2) *Prior consignee statement.*

* * * * *

(vi) For ''600 series items,'' confirms that the items are for ultimate end use by a government of a country listed in § 740.20(c)(1), the United States Government, or a person in the United States, and agrees to permit an end-use check.

PART 742—[AMENDED]

14. The authority citations paragraph for part 742 continues to read as follows:

Authority: 50 U.S.C. app. 2401 *et seq.;* 50 U.S.C. 1701 *et seq.;* 22 U.S.C. 3201 *et seq.;* 42 U.S.C. 2139a; 22 U.S.C. 7201 *et seq.;* 22 U.S.C. 7210; Sec. 1503, Pub. L. 108–11, 117 Stat. 559; E.O. 12058, 43 FR 20947, 3 CFR, 1978 Comp., p. 179; E.O. 12851, 58 FR 33181, 3 CFR, 1993 Comp., p. 608; E.O. 12938, 59 FR 59099, 3 CFR, 1994 Comp., p. 950; E.O. 13026, 61 FR 58767, 3 CFR, 1996 Comp., p. 228; E.O. 13222, 66 FR 44025, 3 CFR, 2001 Comp., p. 783; Presidential Determination 2003–23 of May 7, 2003, 68 FR 26459, May 16, 2003; Notice of August 12, 2011, 76 FR 50661 (August 16, 2011); Notice of November 9, 2011, 76 FR 70319 (November 10, 2011).

15. Section 742.6 is revised to read as follows:

§ 742.6 Regional stability.

(a) * * *

* * * * *

(b) *Licensing policy.* Applications for exports and reexports of ''600 series'' items will be reviewed on a case-by-case basis to determine whether the transaction is contrary to the national security or foreign policy interests of the United States. Other applications for exports and reexports described in paragraph (a)(1), (a)(2), (a)(6) or (a)(7) of this section will be reviewed on a case-by-case basis to determine whether the export or reexport could contribute directly or indirectly to any country's military capabilities in a manner that would alter or destabilize a region's military balance contrary to the foreign policy interests of the United States. Applications for reexports of items described in paragraph (a)(3) of this section will be reviewed applying the policies for similar commodities that are subject to the ITAR. Applications for export or reexport of items classified under any ''600 series'' ECCN listed in paragraph (a)(1) of this section will also be reviewed in accordance with U.S. arms embargo policies and generally will be denied if destined for a destination set forth in § 740.2(a)(12) of the EAR. Applications for export or reexport of ''parts,'' ''components,'' ''accessories,'' ''attachments,'' software, or technology ''specially designed'' or otherwise required for the F–14 aircraft will generally be denied.

PART 743—[AMENDED]

16. The authority citations paragraph for part 743 continues to read as follows:

Authority: 50 U.S.C. app. 2401 *et seq.;* 50 U.S.C. 1701 *et seq.;* E.O. 13222, 66 FR 44025, 3 CFR, 2001 Comp., p. 783; Notice of August 12, 2011, 76 FR 50661 (August 16, 2011).

17. Part 743 is amended by revising its title to read:

PART 743—SPECIAL REPORTING AND NOTIFICATION

18. Section 743.1 is amended by revising paragraph (c) to read as follows:

§ 743.1 Wassenaar Arrangement.

* * * * *

(c) *Items for which reports are required.* You must submit reports to BIS under the provisions of this section only for exports controlled on the Sensitive List (see Supplement No. 6 to part 774).

* * * * *

19. New Section 743.5 is added to read as follows:

§ 743.5 Prior notifications to Congress of Exports of Major Defense Equipment and other transactions.

(a) *General requirement.* Applications to export items on the Commerce Control List that are Major Defense Equipment (MDE) and certain other controlled transactions will be notified to Congress as provided in this section before licenses for such items are issued. 'Major Defense Equipment' means any item having a nonrecurring research and development cost of more than $50,000,000 or a total production cost of more than $200,000,000. Exports to U.S. government end users under License Exception GOV (§ 740.11(b)) do not require such notification.

(b) BIS will notify Congress prior to issuing a license authorizing the export of items controlled to a country *outside* the countries listed in § 740.20(c)(1) (License Exception STA) that are:

(1) Major Defense Equipment sold under a contract in the amount of $14,000,000 or more;

(2) Other ''600 series'' items sold under a contract in the amount of $50,000,000 or more; or

(3) Firearms controlled under ECCN 0A601 under a contract in the amount of $1,000,000 or more.

(c) BIS will notify Congress prior to issuing a license authorizing the export of items controlled to a country listed in § 740.20(c)(1) (License Exception STA) that are:

(1) Major Defense Equipment sold under a contract in the amount of $25,000,000 or more;

(2) Other ''600 series'' items sold under a contract in the amount of $100,000,000 or more; or

(3) Firearms controlled under ECCN 0A601 under a contract in the amount of $1,000,000 or more.

(d) In addition to information required on the application, the exporter must include a copy of the signed contract (including a statement of the contract's value) for any proposed export described in paragraphs (b) or (c).

(e) *Address.* Munitions Control Division at *bis.compliance@bis.doc.gov.*

(f) BIS will hold the case without action (HWA) until the notification period has expired.

PART 744—[AMENDED]

20. The authority citations paragraph for part 744 continues to read as follows:

Authority: 50 U.S.C. app. 2401 *et seq.;* 50 U.S.C. 1701 *et seq.;* 22 U.S.C. 3201 *et seq.;* 42 U.S.C. 2139a; 22 U.S.C. 7201 *et seq.;* 22 U.S.C. 7210; E.O. 12058, 43 FR 20947, 3 CFR, 1978 Comp., p. 179; E.O. 12851, 58 FR 33181, 3 CFR, 1993 Comp., p. 608; E.O. 12938, 59 FR 59099, 3 CFR, 1994 Comp., p. 950; E.O. 12947, 60 FR 5079, 3 CFR, 1995 Comp., p. 356; E.O. 13026, 61 FR 58767, 3 CFR, 1996 Comp., p. 228; E.O. 13099, 63 FR 45167, 3 CFR, 1998 Comp., p. 208; E.O. 13222, 66 FR 44025, 3 CFR, 2001 Comp., p. 783; E.O. 13224, 66 FR 49079, 3 CFR, 2001 Comp., p. 786; Notice of August 12, 2011, 76 FR 50661 (August 16, 2011); Notice of September 21, 2011, 76 FR 59001 (September, 22, 2011); Notice of November 9, 2011, 76 FR 70319 (November 10, 2011); Notice of January 19, 2012, 77 FR 3067 (January 20, 2012).

21. Section 744.21 is amended by redesignating paragraphs (a), (a)(1) and (a)(2) as paragraphs (a)(1), (a)(1)(i) and (a)(1)(ii) and by adding a new paragraph (a)(2) to read as follows:

§ 744.21 Restrictions on Certain Military End-Uses in the People's Republic of China (PRC).

(a)(1) * * *

(a)(2) *General prohibition.* In addition to the license requirements for ''600 series'' items specified on the Commerce Control List (CCL), you may not export, reexport, or transfer any ''600 series'' item, including .y items described in a ''600 series'' ECCN, to the PRC without a license.

PART 750—[AMENDED]

22. The authority citations paragraph for part 750 continues to read as follows:

Authority: 50 U.S.C. app. 2401 *et seq.;* 50 U.S.C. 1701 *et seq.;* Sec 1503, Public Law 108–11, 117 Stat. 559; E.O. 13026, 61 FR 58767, 3 CFR, 1996 Comp., p. 228; E.O. 13222, 66 FR 44025, 3 CFR, 2001 Comp., p. 783; Presidential Determination 2003–23 of May 7, 2003, 68 FR 26459, May 16, 2003; Notice of August 12, 2011, 76 FR 50661 (August 16, 2011).

23. Section 750.4 is amended by adding paragraph (b)(7) to read as follows:

§ 750.4 Procedures for processing license applications.

* * * * *

(b) *Actions not included in processing time calculations.* * * *

(7) *Major Defense Equipment.* Congressional notification, including consultations prior to notification, prior to the issuance of an authorization to export Major Defense Equipment (as defined in§ 743.5 of the EAR).

24. Section 750.7 is amended:

(a) By adding a new paragraph (c)(1)(ix); and

(b) By revising both the introductory text in paragraphs (g) and paragraph (g)(1) to read as follows:

§ 750.7 Issuance of licenses.

(c) *Changes to the license.* * * *

* * * * *

(ix) Direct exports or reexports to approved end users on an export or reexport license, provided those end users are listed by name and location on such export or reexport license *and* the license does not contain any conditions that are specific to the ultimate consignee that cannot be complied with by the end user, such as a reporting requirement that must be made by the ultimate consignee.

(A) *Restriction.* Export and reexport licenses where a class of authorized end users is identified (*e.g.,* by industry or by location), but specific end users are not identified by name on the export or reexport license are specifically excluded from this paragraph (c)(1)(ix). Direct exports or reexports to these types of end users are a material change to the export or reexport license. If exporters or reexporters wish to make such direct exports, they will need to submit an application for a new license in accordance with the instructions contained in Supplement No. 1 to part 748 of the EAR.

(B) [RESERVED].

* * * * *

(g) *License validity period.* Licenses involving the export or reexport of items will generally have a four-year validity period, unless a different validity period has been requested and specifically approved by BIS or is otherwise specified on the license at the time that it is issued. Exceptions from the four-year validity period include license applications reviewed and approved as an ''emergency'' (see § 748.4(h) of the EAR) and license applications for items controlled for short supply reasons, which will be limited to a 12-month validity period. Emergency licenses will expire no later than the last day of the calendar month following the month in which the emergency license is issued. The expiration date will be clearly stated on the face of the license. If the expiration date falls on a legal holiday (Federal or State), the validity period is automatically extended to midnight of the first day of business following the expiration date.

(1) *Extended validity period.* BIS will consider granting a validity period exceeding 4 years on a case-by-case basis when extenuating circumstances warrant such an extension. Requests for such extensions may be made at the time of application or after the license has been issued and it is still valid. BIS will not approve changes regarding other aspects of the license, such as the parties to the transaction and the countries of ultimate destination. An extended validity period will generally be granted where, for example, the transaction is related to a multi-year project; when the period corresponds to the duration of a manufacturing license agreement, technical assistance agreement, warehouse and distribution agreement, or license issued under the International Traffic in Arms Regulations; when production lead time will not permit an export or reexport during the original validity period of the license; when an unforeseen emergency prevents shipment within the 4-year validity of the license; or for other similar circumstances.

* * *

* * * * *

PART 758—[AMENDED]

25. The authority citations paragraph for part 758 continues to read as follows:

Authority: 50 U.S.C. app. 2401 *et seq.;* 50 U.S.C. 1701 *et seq.;* E.O. 13222, 66 FR 44025, 3 CFR, 2001 Comp., p. 783; Notice of August 12, 2011, 76 FR 50661 (August 16, 2011).

26. Section 758.1 is amended by revising the section heading, redesignating paragraphs (b)(3) through (b)(5) as (b)(5) through (b)(7) and by

adding new paragraphs (b)(3) and (b)(4), to read as follows:

§ 758.1 The Automated Export System (AES) record.

* * * * *

(b) * * *

(1) * * *

(2) * * *

(3) For all exports of ''600 series'' items, regardless of value or destination, including exports to Canada;

(4) For all exports under License Exceptions Strategic Trade Authorization (STA);

* * * * *

27. Section 758.2(c) is revised by adding paragraph (c)(4) to read as follows:

§ 758.2 Automated Export System (AES).

* * * * *

(a) * * *

(b) * * *

(4) Exports are made under Strategic Trade Authorization; are made under Authorization Validated End User (VEU); or are of ''600 series'' items.

28. Section 758.6 is revised to read as follows:

§ 758.6 Destination control statement.

(a) *General requirement.* The Destination Control Statement (DCS) must be entered on the invoice and on the bill of lading, air waybill, or other export control document that accompanies the shipment from its point of origin in the United States to the ultimate consignee or end-user abroad. The person responsible for preparation of those documents is responsible for entry of the DCS. The DCS is required for all exports from the United States of items on the Commerce Control List that are not classified as EAR99, unless the export may be made under License Exception BAG or GFT (see part 740 of the EAR). At a minimum, and except as provided in paragraph (b), the DCS must state:

''These commodities, technology, or software were exported from the United States in accordance with the Export Administration Regulations. Diversion contrary to U.S. law is prohibited.''

(b) *''600 series'' items.* For exports of ''600 series'' items, at a minimum, the DCS must state:

''These commodities, technology, or software controlled under [INSERT ECCN(s)] were exported from the United States in accordance with the Export Administration Regulations. Diversion contrary to U.S. law is prohibited.''

PART 762—[AMENDED]

29. The authority citations paragraph for part 762 continues to read as follows:

Authority: 50 U.S.C. app. 2401 *et seq.;* 50 U.S.C. 1701 *et seq.;* E.O. 13222, 66 FR 44025, 3 CFR, 2001 Comp., p. 783; Notice of August 12, 2011, 76 FR 50661 (August 16, 2011).

30. Section 762.2 is amended by adding paragraph (b)(48) to read as follows:

§ 762.2 Records to be retained.

(a) * * *

(b) * * *

(48) § 740.11(b)(2)(iii) and (iv), License Exception GOV.

PART 764—[AMENDED]

31. The authority citations paragraph for part 764 continues to read as follows:

Authority: 50 U.S.C. app. 2401 *et seq.;* 50 U.S.C. 1701 *et seq.;* E.O. 13222, 66 FR 44025, 3 CFR, 2001 Comp., p. 783; Notice of August 12, 2011, 76 FR 50661 (August 16, 2011).

32. Supplement No. 1 to part 764 is amended by removing the penultimate paragraph: ''Fourth, that this order does not prohibit any export, reexport, or other transaction subject to the EAR where the only items involved that are subject to the EAR are the foreign-produced direct product of U.S.-origin technology.''

PART 774—[AMENDED]

33. The authority citations paragraph for part 774 continues to read as follows:

Authority: 50 U.S.C. app. 2401 *et seq.;* 50 U.S.C. 1701 *et seq.;* 10 U.S.C. 7420; 10 U.S.C. 7430(e); 22 U.S.C. 287c, 22 U.S.C. 3201 *et seq.,* 22 U.S.C. 6004; 30 U.S.C. 185(s), 185(u); 42 U.S.C. 2139a; 42 U.S.C. 6212; 43 U.S.C. 1354; 15 U.S.C. 1824a; 50 U.S.C. app. 5; 22 U.S.C. 7201 *et seq.;* 22 U.S.C. 7210; E.O. 13026, 61 FR 58767, 3 CFR, 1996 Comp., p. 228; E.O. 13222, 66 FR 44025, 3 CFR, 2001 Comp., p. 783; Notice of August 12, 2011, 76 FR 50661 (August 16, 2011).

34. In Supplement No. 1 to part 774 (the Commerce Control List), Category 0—Nuclear Materials, Facilities, and Equipment (and Miscellaneous Items), ECCN 0A919 is amended by revising the ''Items'' paragraph to read as follows:

0A919 ''Military commodities'' as follows (see list of items controlled).

* * * * *

Items: ''Military commodities'' with all of the following characteristics:

a. Described on either the United States Munitions List (22 CFR Part 121) or the Munitions List that is published by the Wassenaar Arrangement on Export Controls for Conventional Arms and Dual-Use Goods and Technologies (as set out on its Web site at *http://www.wassenaar.org*), but not any item listed in any Export Control Classification Number for which the last three characters are 018 or any item in the ''600 series'';

b. Produced outside the United States;

c. Not subject to the International Traffic in Arms Regulations (22 CFR Parts 120–130) for a reason other than presence in the United States; *and*

d. One or more of the following characteristics:

d.1. Incorporate one or more cameras classified under ECCN 6A003.b.4.b;

d.2. Incorporate more than a *de minimis* amount of ''600 series'' controlled content (see § 734.4 of the EAR); *or*

d.3. Are direct products of U.S.-origin ''600 series'' technology (see § 736.2(b)(3) of the EAR).

35. Part 774 is amended by adding new Supplement Nos. 6 and 7 to read as follows:

Supplement No. 6 to Part 774—Sensitive List

(Note to Supplement No. 6: If text accompanies an ECCN below, then the Sensitive List is limited to a subset of items classified under the ECCN.)

(1) Category 1

(i) 1A002 (entire entry).

(ii) 1C001 (entire entry).

(iii) 1C007.c and .d.

(iv) 1C010.c and .d.

(v) 1C012 (entire entry).

(vi) 1D002—''software'' for the ''development'' of organic ''matrix'', metal ''matrix'', or carbon ''matrix'' laminates or composites controlled under 1A002, 1C007.c, 1C007.d, 1C010.c or 1C010.d.

(vii) 1E001—''Technology'' according to the General Technology Note for the ''development'' or ''production'' of equipment and materials controlled under 1A002, 1C001, 1C007.c, 1C007.d, 1C010.c, 1C010.d, or 1C012.

(viii) 1E002.e and .f.

(2) Category 2

(i) 2D001—''software'', other than that controlled by 2D002, specially designed for the ''development'' or ''production'' of equipment as follows:

(A) Machine tools for turning (ECCN 2B001.a) having all of the following:

(1) Positioning accuracy with ''all compensations available'' equal to or less (better) than 3.6 μm according to ISO 230/2 (2006) or national equivalents along any linear axis; and

(2) Two or more axes which can be coordinated simultaneously for ''contouring control'';

(B) Machine tools for milling (ECCN 2B001.b) having any of the following:

(1) Positioning accuracy with ''all compensations available'' equal to or less (better) than 3.6 μm according to ISO 230/2 (2006) or national equivalents along any linear axis, and three linear axes plus one rotary axis which can be coordinated simultaneously for ''contouring control'';

(2) Five or more axes which can be coordinated simultaneously for ''contouring control'' and have a positioning accuracy with ''all compensations available'' equal to or less (better) than 3.6 μm according to ISO 230/2 (2006) or national equivalents along any linear axis; or

(3) A positioning accuracy for jig boring machines, with ''all compensations available'', equal to or less (better) than 3 μm according to ISO 230/2 (2006) or national equivalents along any linear axis;

(C) Electrical discharge machines (EDM) controlled under 2B001.d;

(D) Deep-hole-drilling machines controlled under 2B001.f;

(E) ''Numerically controlled'' or manual machine tools controlled under 2B003.

(ii) 2E001—''technology'' according to the General Technology Note for the ''development'' of ''software'' controlled within the specific provisions of 2D001 described in this Supplement or for the ''development'' of equipment as follows:

(A) Machine tools for turning (ECCN 2B001.a) having all of the following:

(1) Positioning accuracy with ''all compensations available'' equal to or less (better) than 3.6 μm according to ISO 230/2 (2006) or national equivalents along any linear axis; and

(2) Two or more axes which can be coordinated simultaneously for ''contouring control'';

(B) Machine tools for milling (ECCN 2B001.b) having any of the following:

(1) Positioning accuracy with ''all compensations available'' equal to or less (better) than 3.6 μm according to ISO 230/2 (2006) or national equivalents along any linear axis, and three linear axes plus one rotary axis which can be coordinated simultaneously for ''contouring control'';

(2) Five or more axes which can be coordinated simultaneously for ''contouring control'' and have a positioning accuracy with ''all compensations available'' equal to or less (better) than 3.6 μm according to ISO 230/2 (2006) or national equivalents along any linear axis; or

(3) A positioning accuracy for jig boring machines, with ''all compensations available'', equal to or less (better) than 3 μm according to ISO 230/2 (2006) or national equivalents along any linear axis;

(C) Electrical discharge machines (EDM) controlled under 2B001.d;

(D) Deep-hole-drilling machines controlled under 2B001.f;

(E) ''Numerically controlled'' or manual machine tools controlled under 2B003.

(iii) 2E002—''technology'' according to the General Technology Note for the ''production'' of equipment as follows:

(A) Machine tools for turning (ECCN 2B001.a) having all of the following:

(1) Positioning accuracy with ''all compensations available'' equal to or less (better) than 3.6 μm according to ISO 230/2 (2006) or national equivalents along any linear axis; and

(2) Two or more axes which can be coordinated simultaneously for ''contouring control'';

(B) Machine tools for milling (ECCN 2B001.b) having any of the following:

(1) Positioning accuracy with ''all compensations available'' equal to or less (better) than 3.6 μm according to ISO 230/2 (2006) or national equivalents along any linear axis, and three linear axes plus one rotary axis which can be coordinated simultaneously for ''contouring control'';

(2) Five or more axes which can be coordinated simultaneously for ''contouring control'' and have a positioning accuracy with ''all compensations available'' equal to or less (better) than 3.6 μm according to ISO 230/2 (2006) or national equivalents along any linear axis; or

(3) A positioning accuracy for jig boring machines, with ''all compensations available'', equal to or less (better) than 3 μm according to ISO 230/2 (2006) or national equivalents along any linear axis;

(C) Electrical discharge machines (EDM) controlled under 2B001.d;

(D) Deep-hole-drilling machines controlled under 2B001.f;

(E) ''Numerically controlled'' or manual machine tools controlled under 2B003.

(3) Category 3

(i) 3A002.g.1.

(ii) 3D001—''software'' specially designed for the ''development'' or ''production'' of equipment controlled under 3A002.g.1.

(iii) 3E001—''technology'' according to the General Technology Note for the ''development'' or ''production'' of equipment controlled under 3A002.g.1.

(4) Category 4

(i) 4A001.a.2.

(ii) 4D001—''software'' specially designed for the ''development'' or ''production'' of equipment controlled under ECCN 4A001.a.2 or for the ''development'' or ''production'' of ''digital computers'' having an 'Adjusted Peak Performance' ('APP') exceeding 0.5 Weighted TeraFLOPS (WT).

(iii) 4E001—''technology'' according to the General Technology Note for the ''development'' or ''production'' of any of the following equipment or ''software'': equipment controlled under ECCN 4A001.a.2, ''digital computers'' having an 'Adjusted Peak Performance' ('APP') exceeding 0.5 Weighted TeraFLOPS (WT), or ''software'' controlled under the specific provisions of 4D001 described in this Supplement.

(5) Category 5—Part 1

(i) 5A001.b.3, .b.5, and .h.

(ii) 5B001.a—equipment and specially designed components or accessories therefor, specially designed for the ''development'', ''production'' or ''use'' of equipment, functions or features controlled under 5A001.b.3, b.5, or .h.

(iii) 5D001.a—''software'' specially designed for the ''development'' or ''production'' of equipment, functions or features controlled under 5A001.b.3, b.5, or .h.

(iv) 5D001.b—''software'' specially designed or modified to support ''technology'' controlled by this Supplement's description of 5E001.a.

(v) 5E001.a—''technology'' according to the General Technology Note for the ''development'' or ''production'' of equipment, functions or features controlled under 5A001.b.3, b.5, or .h or ''software'' described in this Supplement's description of 5D001.a.

(6) Category 6

(i) 6A001.a.1.b—systems or transmitting and receiving arrays, designed for object detection or location, having any of the following:

(A) A transmitting frequency below 5 kHz or a sound pressure level exceeding 224 dB (reference 1 μPa at 1 m) for equipment with an operating frequency in the band from 5 kHz to 10 kHz inclusive;

(B) Sound pressure level exceeding 224 dB (reference 1 μPa at 1 m) for equipment with an operating frequency in the band from 10 kHz to 24 kHz inclusive;

(C) Sound pressure level exceeding 235 dB (reference 1 μPa at 1 m) for equipment with an operating frequency in the band between 24 kHz and 30 kHz;

(D) Forming beams of less than 1° on any axis and having an operating frequency of less than 100 kHz;

(E) Designed to operate with an unambiguous display range exceeding 5,120 m; *or*

(F) Designed to withstand pressure during normal operation at depths exceeding 1,000 m and having transducers with any of the following:

(1) Dynamic compensation for pressure; or

(2) Incorporating other than lead zirconate titanate as the transduction element;

(ii) 6A001.a.1.e.

(iii) 6A001.a.2.a.1, a.2.a.2, a.2.a.3, a.2.a.5, and a.2.a.6.

(iv) 6A001.a.2.b.

(v) 6A001.a.2.c—processing equipment, specially designed for real time application with towed acoustic hydrophone arrays, having ''user accessible programmability'' and time or frequency domain processing and correlation, including spectral analysis, digital filtering and beamforming using Fast Fourier or other transforms or processes.

(vi) 6A001.a.2.d.

(vii) 6A001.a.2.e.

(viii) 6A001.a.2.f—processing equipment, specially designed for real time application with bottom or bay cable systems, having ''user accessible programmability'' and time or frequency domain processing and correlation, including spectral analysis, digital filtering and beamforming using Fast Fourier or other transforms or processes.

(ix) 6A002.a.1.a, a.1.b, and a.1.c.

(x) 6A002.a.1.d.

(xi) 6A002.a.2.a—image intensifier tubes having all of the following:

(A) A peak response in the wavelength range exceeding 400 nm but not exceeding 1,050 nm;

(B) Electron image amplification using any of the following:

(1) A microchannel plate for electron image amplification with a hole pitch (center-to-center spacing) of 12 μm or less; or

(2) An electron sensing device with a non-binned pixel pitch of 500 μm or less, specially designed or modified to achieve 'charge multiplication' other than by a microchannel plate; and

(C) Any of the following photocathodes:

(1) Multialkali photocathodes (e.g., S–20 and S–25) having a luminous sensitivity exceeding 700 μA/lm;

(2) GaAs or GaInAs photocathodes; *or*

(3) Other ''III–V compound'' semiconductor photocathodes having a

maximum ''radiant sensitivity'' exceeding 10 mA/W.

(xii) 6A002.a.2.b.

(xiii) 6A002.a.3—subject to the following additional notes:

Note 1: 6A002.a.3 does not apply to the following ''focal plane arrays'' in this Supplement:

a. Platinum Silicide (PtSi) ''focal plane arrays'' having less than 10,000 elements;

b. Iridium Silicide (IrSi) ''focal plane arrays''.

Note 2: 6A002.a.3 does not apply to the following ''focal plane arrays'' in this Supplement:

a. Indium Antimonide (InSb) or Lead Selenide (PbSe) ''focal plane arrays'' having less than 256 elements;

b. Indium Arsenide (InAs) ''focal plane arrays'';

c. Lead Sulphide (PbS) ''focal plane arrays'';

d. Indium Gallium Arsenide (InGaAs) ''focal plane arrays''.

Note 3: 6A002.a.3 does not apply to Mercury Cadmium Telluride (HgCdTe) ''focal plane arrays'' as follows in this Supplement:

a. 'Scanning Arrays' having any of the following:

1. 30 elements or less; or

2. Incorporating time delay-and-integration within the element and having 2 elements or less;

b. 'Staring Arrays' having less than 256 elements.

Technical Notes: a. 'Scanning Arrays' are defined as ''focal plane arrays'' designed for use with a scanning optical system that images a scene in a sequential manner to produce an image;

b. 'Staring Arrays' are defined as ''focal plane arrays'' designed for use with a non-scanning optical system that images a scene.

Note 6: 6A002.a.3 does not apply to the following ''focal plane arrays'' in this List:

a. Gallium Arsenide (GaAs) or Gallium Aluminum Arsenide (GaAlAs) quantum well ''focal plane arrays'' having less than 256 elements;

b. Microbolometer ''focal plane arrays'' having less than 8,000 elements.

Note 7: 6A002.a.3.g does not apply to the linear (1-dimensional) ''focal plane arrays'' specially designed or modified to achieve 'charge multiplication' having 4,096 elements or less.

Note 8: 6A002.a.3.g. does not apply to the non-linear (2-dimensional) ''focal plane arrays'' specially designed or modified to achieve 'charge multiplication' having a maximum linear dimension of 4,096 elements and a total of 250,000 elements or less.

(xiv) 6A002.b.

(xv) 6A002.c—'direct view' imaging equipment incorporating any of the following:

(A) Image intensifier tubes having the characteristics listed in this Supplement's description of 6A002.a.2.a or 6A002.a.2.b;

(B) ''Focal plane arrays'' having the characteristics listed in this Supplement's description of 6A002.a.3; or

(C) Solid-state detectors having the characteristics listed in 6A002.a.1.

(xvi) 6A003.b.3—imaging cameras incorporating image intensifier tubes having the characteristics listed in this Supplement's description of 6A002.a.2.a or 6A002.a.2.b.

Note: 6A003.b.3 does not apply to imaging cameras specially designed or modified for underwater use.

(xvii) 6A003.b.4—imaging cameras incorporating ''focal plane arrays'' having any of the following:

(A) Incorporating ''focal plane arrays'' specified by this Supplement's description of 6A002.a.3.a to 6A002.a.3.e;

(B) Incorporating ''focal plane arrays'' specified by this Supplement's description of 6A002.a.3.f; or

(C) Incorporating ''focal plane arrays'' specified by this Supplement's description of 6A002.a.3.g.

Note 1: 'Imaging cameras' described in 6A003.b.4 include ''focal plane arrays'' combined with sufficient ''signal processing'' electronics, beyond the read out integrated circuit, to enable as a minimum the output of an analog or digital signal once power is supplied.

Note 2: 6A003.b.4.a does not control imaging cameras incorporating linear ''focal plane arrays'' with 12 elements or fewer, not employing time-delay-and-integration within the element, and designed for any of the following:

a. Industrial or civilian intrusion alarm, traffic or industrial movement control or counting systems;

b. Industrial equipment used for inspection or monitoring of heat flows in buildings, equipment or industrial processes;

c. Industrial equipment used for inspection, sorting or analysis of the properties of materials;

d. Equipment specially designed for laboratory use; or

e. Medical equipment.

Note 3: 6A003.b.4.b does not control imaging cameras having any of the following characteristics:

a. A maximum frame rate equal to or less than 9 Hz;

b. Having all of the following:

1. Having a minimum horizontal or vertical 'Instantaneous-Field-of-View (IFOV)' of at least 10 mrad/pixel (milliradians/pixel);

2. Incorporating a fixed focal-length lens that is not designed to be removed;

3. Not incorporating a 'direct view' display; and

Technical Note: 'Direct view' refers to an imaging camera operating in the infrared spectrum that presents a visual image to a human observer using a near-to-eye micro display incorporating any light-security mechanism.

4. Having any of the following:

a. No facility to obtain a viewable image of the detected field-of-view; or

b. The camera is designed for a single kind of application and designed not to be user modified; or

Technical Note: 'Instantaneous Field of View (IFOV)' specified in Note 3.b is the lesser figure of the 'Horizontal FOV' or the 'Vertical FOV'.

'Horizontal IFOV' = horizontal Field of View (FOV)/number of horizontal detector elements

'Vertical IFOV'= vertical Field of View (FOV)/number of vertical detector elements.

c. Where the camera is specially designed for installation into a civilian passenger land vehicle of less than 3 tonnes three tons (gross vehicle weight) and having all of the following:

1. Is operable only when installed in any of the following:

a. The civilian passenger land vehicle for which it was intended; or

b. A specially designed, authorized maintenance test facility; and

2. Incorporates an active mechanism that forces the camera not to function when it is removed from the vehicle for which it was intended.

Note: When necessary, details of the items will be provided, upon request, to the Bureau of Industry and Security in order to ascertain compliance with the conditions described in Note 3.b.4 and Note 3.c in this Note to 6A003.b.4.b.

Note 4: 6A003.b.4.c does not apply to 'imaging cameras' having any of the following characteristics:

a. Having all of the following:

1. Where the camera is specially designed for installation as an integrated component into indoor and wall-plug-operated systems or equipment, limited by design for a single kind of application, as follows:

a. Industrial process monitoring, quality control, or analysis of the properties of materials;

b. Laboratory equipment specially designed for scientific research;

c. Medical equipment;

d. Financial fraud detection equipment; and

2. Is only operable when installed in any of the following:

a. The system(s) or equipment for which it was intended; or

b. A specially designed, authorized maintenance facility; and

3. Incorporates an active mechanism that forces the camera not to function when it is removed from the system(s) or equipment for which it was intended;

b. Where the camera is specially designed for installation into a civilian passenger land vehicle of less than 3 tonnes (gross vehicle weight), or passenger and vehicle ferries having a length overall (LOA) 65 m or greater, and having all of the following:

1. Is only operable when installed in any of the following:

a. The civilian passenger land vehicle or passenger and vehicle ferry for which it was intended; or

b. A specially designed, authorized maintenance test facility; and

2. Incorporates an active mechanism that forces the camera not to function when it is removed from the vehicle for which it was intended;

c. Limited by design to have a maximum ''radiant sensitivity'' of 10 mA/W or less for wavelengths exceeding 760 nm, having all of the following:

1. Incorporating a response limiting mechanism designed not to be removed or modified; and

2. Incorporates an active mechanism that forces the camera not to function when the response limiting mechanism is removed; and

3. Not specially designed or modified for underwater use; or

d. Having all of the following:

1. Not incorporating a 'direct view' or electronic image display;

2. Has no facility to output a viewable image of the detected field of view;

3. The ''focal plane array'' is only operable when installed in the camera for which it was intended; and

4. The ''focal plane array'' incorporates an active mechanism that forces it to be permanently inoperable when removed from the camera for which it was intended.

Note: When necessary, details of the item will be provided, upon request, to the Bureau of Industry and Security in order to ascertain compliance with the conditions described in Note 4 above.

Note 5: 6A003.b.4.c does not apply to imaging cameras specially designed or modified for underwater use.

(xviii) 6A003.b.5.

(xix) 6A004.c.

(xx) 6A004.d.

(xxi) 6A006.a.1.

(xxii) 6A006.a.2—''magnetometers'' using optically pumped or nuclear precession (proton/Overhauser) ''technology'' having a 'sensitivity' lower (better) than 2 pT (rms) per square root Hz.

(xxiii) 6A006.c.1—''magnetic gradiometers'' using multiple ''magnetometers'' specified by 6A006.a.1 or this Supplement's description of 6A006.a.2.

(xxiv) 6A006.d—''compensation systems'' for the following:

(A) Magnetic sensors specified by 6A006.a.2 and using optically pumped or nuclear precession (proton/Overhauser) ''technology'' that will permit these sensors to realize a 'sensitivity' lower (better) than 2 pT rms per square root Hz.

(B) Underwater electric field sensors specified by 6A006.b.

(C) Magnetic gradiometers specified by 6A006.c. that will permit these sensors to realize a 'sensitivity' lower (better) than 3 pT/m rms per square root Hz.

(xxv) 6A006.e—underwater electromagnetic receivers incorporating magnetometers specified by 6A006.a.1 or this Supplement's description of 6A006.a.2.

(xxvi) 6A008.d, .h, and .k.

(xxvii) 6B008.

(xxviii) 6D001—''software'' specially designed for the ''development'' or ''production'' of equipment specified by 6A004.c, 6A004.d, 6A008.d, 6A008.h, 6A008.k, or 6B008.

(xxix) 6D003.a.

(xxx) 6E001.

(xxxi) 6E002—''technology'' according to the General Technology Note for the ''production'' of equipment specified by the 6A or 6B provisions described in this Supplement.

(7) Category 7

(i) 7D002.

(ii) 7D003.a.

(iii) 7D003.b.

(iv) 7D003.c.

(v) 7D003.d.1 to d.4, d.7.

(vi) 7E001.

(vii) 7E002.

(8) Category 8

(i) 8A001.b to .d.

(ii) 8A002.b—systems specially designed or modified for the automated control of the motion of submersible vehicles specified by 8A001.b through .d using navigation data having closed loop servo-controls and having any of the following:

(A) Enabling a vehicle to move within 10 m of a predetermined point in the water column;

(B) Maintaining the position of the vehicle within 10 m of a predetermined point in the water column; or

(C) Maintaining the position of the vehicle within 10 m while following a cable on or under the seabed.

(iii) 8A002.h and .j.

(iv) 8A002.o.3.

(v) 8A002.p.

(vi) 8D001—''software'' specially designed for the ''development'' or ''production'' of equipment in 8A001.b to .d, 8A002.b (as described in this Supplement), 8A002.h, 8A002.j, 8A002.o.3, or 8A002.p.

(vii) 8D002.

(viii) 8E001—''technology'' according to the General Technology Note for the ''development'' or ''production'' of equipment specified by 8A001.b to .d, 8A002.b (as described in this Supplement), 8A002.h, 8A002.j, 8A002.o.3, or 8A002.p.

(ix) 8E002.a.

(9) Category 9

(i) 9A011.

(ii) 9B001.b.

(iii) 9D001—''software'' specially designed or modified for the ''development'' of equipment or ''technology'', specified by 9A011, 9B001.b. 9E003.a.1, 9E003.a.2 to a.5 or 9E003.a.8 or 9E003.h.

(iv) 9D002—''software'' specially designed or modified for the ''production'' of equipment specified by 9A011 or 9B001.b.

(v) 9D004.a and .c.

(vi) 9E001.

(vii) 9E002.

(viii) 9E003.a.1.

(ix) 9E003.a.2 to a.5, a.8, .h.

Supplement No. 7 to Part 774—Very Sensitive List

(Note to Supplement No. 7: If text accompanies an ECCN below, then the Very Sensitive List is limited to a subset of items classified under the ECCN).

(1) Category 1

(i) 1A002.a.

(ii) 1C001 (entire entry).

(iii) 1C012 (entire entry).

(iv) 1E001—''technology'' according to the General Technology Note for the ''development'' or ''production'' of equipment and materials specified by 1A002.a, 1C001, or 1C012.

(2) Category 5—Part 1

(i) 5A001.b.5.

(ii) 5A001.h.

(iii) 5D001.a—''software'' specially designed for the ''development'' or ''production'' of equipment, functions or features specified by 5A001.b.5 or 5A001.h.

(iv) 5E001.a—''technology'' according to the General Technology Note for the ''development'' or ''production'' of equipment, functions, features or ''software'' specified by 5A001.b.5, 5A001.h, or 5D001.a.

(3) Category 6

(i) 6A001.a.1.b.1—systems or transmitting and receiving arrays, designed for object detection or location, having a sound pressure level exceeding 210 dB (reference 1 μPa at 1 m) and an operating frequency in the band from 30 Hz to 2 kHz.

(ii) 6A001.a.2.a.1 to a.2.a.3, a.2.a.5, or a.2.a.6.

(iii) 6A001.a.2.b.

(iv) 6A001.a.2.c—processing equipment, specially designed for real time application with towed acoustic hydrophone arrays, having ''user accessible programmability'' and time or frequency domain processing and correlation, including spectral analysis, digital filtering and beamforming using Fast Fourier or other transforms or processes.

(v) 6A001.a.2.e.

(vi) 6A001.a.2.f—processing equipment, specially designed for real time application with bottom or bay cable systems, having ''user accessible programmability'' and time or frequency domain processing and correlation, including spectral analysis, digital filtering and beamforming using Fast Fourier or other transforms or processes.

(vii) 6A002.a.1.c.

(viii) 6B008.

(ix) 6D001—''software'' specially designed for the ''development'' or ''production'' of equipment specified by 6B008.

(x) 6D003.a.

(xi) 6E001—''technology'' according to the General Technology Note for the ''development'' of equipment or ''software'' specified by the 6A, 6B, or 6D provisions described in this Supplement.

(xii) 6E002—''technology'' according to the General Technology Note for the ''production'' of equipment specified by the 6A or 6B provisions described in this Supplement.

(4) Category 7

(i) 7D003.a.

(ii) 7D003.b.

(5) Category 8

(i) 8A001.b.

(ii) 8A001.d.

(iii) 8A002.o.3.b.

(iv) 8D001—''software'' specially designed for the ''development'' or ''production'' of equipment specified by 8A001.b, 8A001.d, or 8A002.o.3.b.

(v) 8E001—''technology'' according to the General Technology Note for the ''development'' or ''production'' of equipment specified by 8A001.b, 8A001.d, or 8A002.o.3.b.

(6) Category 9

(i) 9A011.

(ii) 9D001—''software'' specially designed or modified for the ''development'' of equipment or ''technology'' specified by 9A011, 9E003.a.1, or 9E003.a.3.a.

(iii) 9D002—''software'' specially designed or modified for the ''production'' of equipment specified by 9A011.

(iv) 9E001—''technology'' according to the General Technology note for the ''development'' of equipment or ''software'' specified by 9A011 or this Supplement's description of 9D001 or 9D002.

(v) 9E002—''technology'' according to the General Technology Note for the ''production'' of equipment specified by 9A011.

(vi) 9E003.a.1.

(vii) 9E003.a.3.a.

Dated: June 15, 2012.

Kevin J. Wolf,

Assistant Secretary of Commerce for Export Administration.

[FR Doc. 2012–15074 Filed 6–20–12; 8:45 am]

BILLING CODE 3510–33–P

Reader Aids

Federal Register

Vol. 77, No. 120

Thursday, June 21, 2012

CUSTOMER SERVICE AND INFORMATION

Federal Register/Code of Federal Regulations	
General Information, indexes and other finding aids	**202–741–6000**
Laws	**741–6000**
Presidential Documents	
Executive orders and proclamations	**741–6000**
The United States Government Manual	**741–6000**
Other Services	
Electronic and on-line services (voice)	**741–6020**
Privacy Act Compilation	**741–6064**
Public Laws Update Service (numbers, dates, etc.)	**741–6043**
TTY for the deaf-and-hard-of-hearing	**741–6086**

ELECTRONIC RESEARCH

World Wide Web

Full text of the daily Federal Register, CFR and other publications is located at: **www.fdsys.gov.**

Federal Register information and research tools, including Public Inspection List, indexes, and links to GPO Access are located at: **www.ofr.gov.**

E-mail

FEDREGTOC-L (Federal Register Table of Contents LISTSERV) is an open e-mail service that provides subscribers with a digital form of the Federal Register Table of Contents. The digital form of the Federal Register Table of Contents includes HTML and PDF links to the full text of each document.

To join or leave, go to **http://listserv.access.gpo.gov** and select *Online mailing list archives, FEDREGTOC-L, Join or leave the list (or change settings);* then follow the instructions.

PENS (Public Law Electronic Notification Service) is an e-mail service that notifies subscribers of recently enacted laws.

To subscribe, go to **http://listserv.gsa.gov/archives/publaws-l.html** and select *Join or leave the list (or change settings);* then follow the instructions.

FEDREGTOC-L and **PENS** are mailing lists only. We cannot respond to specific inquiries.

Reference questions. Send questions and comments about the Federal Register system to: **fedreg.info@nara.gov**

The Federal Register staff cannot interpret specific documents or regulations.

Reminders. Effective January 1, 2009, the Reminders, including Rules Going Into Effect and Comments Due Next Week, no longer appear in the Reader Aids section of the Federal Register. This information can be found online at **http://www.regulations.gov.**

CFR Checklist. Effective January 1, 2009, the CFR Checklist no longer appears in the Federal Register. This information can be found online at **http://bookstore.gpo.gov/.**

FEDERAL REGISTER PAGES AND DATE, JUNE

32391–32880 1
32881–33062 4
33063–33288 5
33289–33594 6
33595–33944 7
33945–34178 8
34179–34780 11
34781–35240 12
35241–35616 13
35617–35806 14
35807–36114 15
36115–36386 18
36387–36900 19
36901–37258 20
37259–37548 21

CFR PARTS AFFECTED DURING JUNE

At the end of each month the Office of the Federal Register publishes separately a List of CFR Sections Affected (LSA), which lists parts and sections affected by documents published since the revision date of each title.

3 CFR

Proclamations:
8829 32875
8830 32877
8831 32879
8832 33595
8833 33597
8834 33599
8835 33601
8836 33603
8837 35807
8838 36901
8839 37259

Executive Orders:
13616 36903

Administrative Orders:
Memorandums:
Memorandum of April 24, 2012 33945
Memorandum of May 23, 2012 32391
Memorandum of June 7, 2012 35241

Notices:
Notice of June 14, 2012 36113
Notice of June 18, 2012 (Russian Federation) 37261
Notice of June 18, 2012 (North Korea) 37263
Presidential Determinations:
No. 2012–07 of April 24, 2012 33947
No. 2012–09 of June 11, 2012 36387

5 CFR

Ch. LXXXIII 34179
9301 34179

Proposed Rules:
532 34854
1200 33663
1201 33663
1203 33663
1208 33663
1209 33663

6 CFR

5 33605

Proposed Rules:
5 33683

7 CFR

7 33063
28 33289
205 33290
319 34781
614 34186
930 .....33303, 36115
983 36119
985 33076
1700 35245

Proposed Rules:
932 33104
1205 34855
1280 34868
3201 33270

9 CFR

11 33607
55 35542
81 35542
93 34783
94 34783
95 34783

10 CFR

26 33619
71 34194
73 34194
170 35809
171 35809

Proposed Rules:
430 .....33106, 35299
431 32916
1703 .....32433, 33980

12 CFR

1 .....35253, 35259
5 35253
16 35253
28 35253
32 37265
159 37265
160 .....35253, 35259, 37265
225 33949
241 32881
618 37283
1236 33950

Proposed Rules:
380 36194
1026 33120
1254 36086
1282 34263

14 CFR

25 36123
39 .....32884, 32887, 32889, 32892, 33083, 33619, 33622, 34206, 36125, 36127, 36129, 36131, 36134, 36137, 36139, 36143, 36146, 36389, 37283
71 .....32393, 32895, 32896, 34208, 34209, 34210, 34211, 35617, 35618, 35836
73 36907
97 .....33085, 33087
121 34784

Proposed Rules:
39 .....32433, 32437, 32439, 32918, 33125, 33127, 33129,

33332, 33334, 34281, 34283, 34870, 34872, 34874, 34876, 34878, 34881, 35304, 35306, 35888, 35890, 36206, 36209, 36211, 36213, 36216, 36220, 36222, 36224, 36948, 36950, 37332, 37337, 37340, 37342, 37344
71 .....32921, 33685, 33687
73.....35308
121.....32441

15 CFR

Proposed Rules:
734.....37524
736.....37524
740.....33688, 37524
742 .....33688, 35310, 37524
743.....37524
744.....37524
750.....37524
758.....37524
762.....37524
764.....37524
772.....36409
774 .....33688, 35310, 36409, 36419, 37524
906.....33980
1400.....34883

16 CFR

436.....36149
Proposed Rules:
305.....33337
309.....36423

17 CFR

1.....36612
16.....36612
38.....36612
46.....35200
275.....35263
Proposed Rules:
3.....35892
23.....35892
240.....35625

19 CFR

12.....33624
111.....33964
163.....33964

20 CFR

404.....35264
701.....37284
702.....37284
703.....37284
725.....37284
726.....37284

21 CFR

179.....34212
510.....32897
516.....35837
Proposed Rules:
172.....35317
876.....36951

22 CFR

120.....33089
123.....33089
124.....33089
126.....33089
127.....33089
129.....33089
Proposed Rules:
120.....36428, 37346
121 .....33698, 35317, 37346
122.....37346
123.....37346
124.....37346
125.....37346
126.....37346
127.....37346
128.....37346
129.....37346
130.....37346

25 CFR

Proposed Rules:
226.....36226
543.....32444
547.....32465

26 CFR

1 .....34785, 34788, 36914
20.....36150
25.....36150
602.....36150, 36914
Proposed Rules:
1 .....34884, 34887, 36228, 36229, 37349, 37352
20.....36229
25.....36229
301.....37352

27 CFR

40.....37287
41.....37287
44.....37287
45.....37287
478.....33625, 33630
Proposed Rules:
9.....33985, 36433

28 CFR

115.....37106

29 CFR

4022.....35838
4044.....35838
Proposed Rules:
1206.....33701

30 CFR

Proposed Rules:
917.....34888
936.....34890
944.....34892
950.....34894

31 CFR

344.....33634
1010.....33635
1020.....33638

32 CFR

241.....36916

33 CFR

1.....37305
2.....37305
27.....37305
40.....37305
45.....37305
66.....37305
80.....37305
83.....37305
84.....37305
85.....37305
100 .....33089, 33337, 33967, 34215, 35266, 35839, 36390, 37305
101.....37305
110.....37305
114.....37305
115.....37305
116.....37305
117 .....32393, 32394, 33337, 34797, 35843, 36393, 37305, 37316, 37317
118.....37305
136.....37305
138.....37305
151.....33969, 35268
162.....37305
165 .....32394, 32898, 33089, 33094, 33308, 33309, 33312, 33970, 34797, 34798, 35268, 35271, 35619, 35621, 35839, 35844, 35846, 35848, 35850, 35852, 35854, 35855, 35857, 35860, 35862, 36394, 36396, 37305, 37318, 37319, 37321, 37324, 37326
177.....37305
Proposed Rules:
100.....33130, 35321
117.....35897
165 .....34285, 34894, 35898, 35900, 35903, 35906, 36439, 36955, 37356

34 CFR

Proposed Rules:
Ch. II.....36958

36 CFR

242.....35482
Proposed Rules:
220.....35323
1191.....36231

37 CFR

Proposed Rules:
201.....35643

38 CFR

3.....34218
9.....32397

39 CFR

20.....33640
111.....33314

40 CFR

51.....33642
52 .....32398, 33642, 33659, 34218, 34801, 34808, 34810, 34819, 35273, 35279, 35285, 35287, 35862, 35866, 35870, 35873, 36163, 36400, 36404, 37328
81.....34221, 34819
82.....33315
85.....34130
86.....34130
87.....36342
97.....34830
180 .....32400, 32401, 35291, 35295, 36919
271.....34229
711.....36170
1039.....34130
1068.....36342
Proposed Rules:
52 .....32481, 32483, 32493, 33022, 33360, 33363, 33372, 33380, 34288, 34297, 34300, 34302, 34306, 34897, 34898, 34906, 35326, 35327, 35329, 35652, 35909, 35917, 36044, 36442, 36443, 36964, 37359
60.....33812
63.....33812, 37361
65.....36248
80.....34915
85.....34149
86.....34149
122.....34315, 34927
123.....34315, 34927
124.....34315, 34927
125.....34315, 34927
261.....36447
725.....35331
1039.....34149

42 CFR

71.....35873
417.....32407
422.....32407
423.....32407
Proposed Rules:
88.....35574
405.....35917
411.....35917
412.....34326
413.....34326
424.....34326
476.....34326
489.....34326

44 CFR

64.....36172

45 CFR

Proposed Rules:
Subchapter A.....36958
156.....33133

46 CFR

25.....33860
27.....33860
28.....33860
31.....33860
34.....33860
35.....33860
62.....33860
71.....33860
76.....33860
78.....33860
91.....33860
95.....33860
97.....33860
107.....33860
108.....33860
112.....33860
115.....33860
118.....33860
119.....33860
122.....33860
131.....33860
132.....33860
147.....33860
162 .....33860, 33969, 35268
167.....33860
169.....33860
176.....33860
181.....33860
182.....33860
185.....33860

189 33860
190 33860
193 33860
194 33860
196 33860
532 33971

47 CFR

1 ....33097, 36177
11 33661
15 33098
17 36177
22 36177
24 36177
25 36177
27 36177
51 ....35623, 36406
54 ....33097, 35623, 36406
64 ....33662, 34233
73 32900
76 36178
80 36177
87 36177
90 ....33972, 36177

Proposed Rules:

1 37362
11 33995
54 33896
64 ....35336, 37362
73 33997

48 CFR

6 35624
15 35624
19 35624
201 35879
203 35879
204 35879
212 35879
213 35879
216 35883
217 35879
219 35879
222 35879
225 ....35879, 35883
233 35879
243 35879
252 ....35879, 35883

Proposed Rules:

211 35921
212 35921
218 35921
246 35921
252 35921

49 CFR

23 36924
234 35164
371 32901
375 ....32901, 36932
386 ....32901, 34249
387 32901
390 34846
395 ....33098, 33331
396 34846
541 32903
580 36935
1572 36406

Proposed Rules:

571 37478
594 35338
595 33998
1572 35343

50 CFR

17 ....33100, 35118, 36728
100 35482
226 32909
622 ....32408, 32913, 32914, 34254, 36946, 37330
660 36192
665 34260
679 ....33103, 34262, 34853
697 32420

Proposed Rules:

17 ....32483, 32922, 33142, 33143, 34338, 36457, 36460, 36872, 37367
20 ....34931, 36980
600 35349
665 ....34331, 34334
679 35925

LIST OF PUBLIC LAWS

This is a continuing list of public bills from the current session of Congress which have become Federal laws. It may be used in conjunction with "PLUS" (Public Laws Update Service) on 202–741–6043. This list is also available online at *http://www.archives.gov/federal-register/laws*.

The text of laws is not published in the **Federal Register** but may be ordered in "slip law" (individual pamphlet) form from the Superintendent of Documents, U.S. Government Printing Office, Washington, DC 20402 (phone, 202–512–1808). The text will also be made available on the Internet from GPO's Federal Digital System (FDsys) at *http://www.gpo.gov/fdsys*. Some laws may not yet be available.

S. 292/P.L. 112–133

Salmon Lake Land Selection Resolution Act (June 15, 2012; 126 Stat. 380)

S. 363/P.L. 112–134
To authorize the Secretary of Commerce to convey property of the National Oceanic and Atmospheric Administration to the City of Pascagoula, Mississippi, and for other purposes. (June 15, 2012; 126 Stat. 382)

Last List June 15, 2012

Public Laws Electronic Notification Service (PENS)

PENS is a free electronic mail notification service of newly enacted public laws. To subscribe, go to *http://listserv.gsa.gov/archives/publaws-l.html*

Note: This service is strictly for E-mail notification of new laws. The text of laws is not available through this service. **PENS** cannot respond to specific inquiries sent to this address.