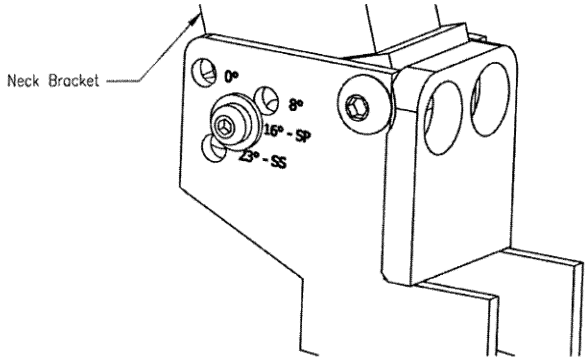

Figure 14a. HIII-10C Dummy Neck Angle Setting is SP-16 Degrees

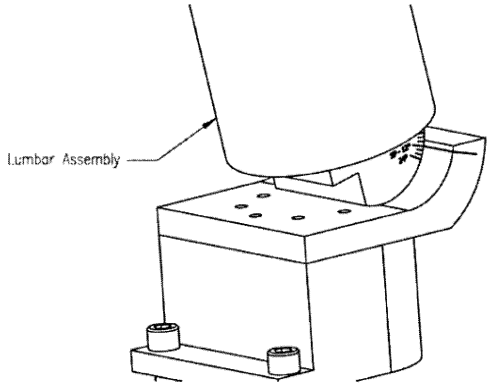

Figure 14b. HIII-10C Dummy Lumbar Angle Setting is SP-12 Degrees

Issued on: February 16, 2012.

David L. Strickland,

Administrator.

[FR Doc. 2012–4134 Filed 2–21–12; 11:15 am]

BILLING CODE 4910–59–C

DEPARTMENT OF TRANSPORTATION

National Highway Traffic Safety Administration

49 CFR Part 572

[Docket No. NHTSA–2011–0175]

RIN 2127–AJ49

Hybrid III 10-Year-Old Child Test Dummy

AGENCY: National Highway Traffic Safety Administration (NHTSA), Department of Transportation (DOT).

ACTION: Final rule.

SUMMARY: This final rule establishes regulations setting forth specifications and qualification requirements for a Hybrid III 10-year-old size child test dummy (HIII–10C). In a companion document published elsewhere in this issue of the **Federal Register**, NHTSA is adopting use of the dummy to test child restraints recommended for children weighing more than 65 pounds (lb) for compliance with the Federal motor vehicle safety standard for child restraint systems. The HIII–10C dummy enables NHTSA to assess the performance of child restraint systems in restraining children in the 8- to 12-year-old age range.

DATES: *Effective date:* April 27, 2012. The incorporation by reference of the publications listed in the rule has been approved by the Director of the Federal Register as of April 27, 2012.

If you wish to petition for reconsideration of this rule, your petition must be received by April 12, 2012.

ADDRESSES: If you wish to petition for reconsideration of this rule, you should refer in your petition to the docket number of this document and submit your petition to: Administrator, National Highway Traffic Safety Administration, 1200 New Jersey Avenue SE., West Building, Washington, DC 20590. For more information, see Section V, Rulemaking Analyses and Notices.

FOR FURTHER INFORMATION CONTACT: For non-legal issues, you may call Peter Martin, NHTSA Office of Crashworthiness Standards (telephone 202–366–5668) (fax 202–493–2990). For legal issues, you may call Deirdre Fujita, NHTSA Office of Chief Counsel (telephone 202–366–2992) (fax 202–366–3820). The mailing address for these officials is the National Highway Traffic Safety Administration, 1200 New Jersey Avenue SE., Washington, DC 20590.

SUPPLEMENTARY INFORMATION: *Petitions for reconsideration of this rule:* The petition will be placed in the docket. Anyone is able to search the electronic form of all documents received into any of our dockets by the name of the individual submitting the comment (or signing the comment, if submitted on behalf of an association, business, labor

union, etc.). You may review DOT's complete Privacy Act Statement in the **Federal Register** published on April 11, 2000 (Volume 65, Number 70; Pages 19477–78).

Table of Contents

I. Executive Summary
II. Background
a. 2005 NPRM
b. Developments Since 2005
c. Summary of Decision
III. Summary of Comments
IV. Response to Comments
a. Functionality of the HIII–10C as a Part 572 ATD
1. Chin-to-Chest Contact
2. Shock Emanating From Shoulder and Neck
i. Shoulder Revision
ii. Lower Neck Revision
3. Stiffness of Vinyl Insert
4. Dummy Availability
b. Durability of the HIII–10C
1. Proximal Femur
2. Bib Assembly
3. Shoulder Rotation Stop Screws
4. Agency Part Replacement Records
i. Pelvis Helicoil Insert
ii. Neck and Ribcage Replacement
iii. Other Replacements
5. Durability Summary
c. Qualification Procedures and Requirements
1. Response Corridors
i. Head
ii. Neck
iii. Thorax
iv. Torso Flexion
v. Knee Impact
2. Summary of Qualification Requirements
3. Impact Probes
4. Instrumentation
i. Rotary Potentiometers
ii. Sternum Displacement
d. Technical Data Package
1. Changes to the Engineering Drawings and PADI
2. Organization of Materials
i. Searchable Text
ii. Order of Engineering Drawings
iii. Part Quantity Specification
iv. Part Numbering Scheme
3. Specifications for Soft Parts
4. Use of 3D Computer Renderings
e. Other
1. Labeling the Dummy as a ''Ten Year Old''
2. Best Practices for Belt Routing
3. Abdominal Injury Correlates
4. Repeatability in Systems Testing
f. Dummy Development Efforts
1. Hybrid III Child Dummy Revisions—Abdomen and Pelvis
2. Pediatric Research
3. Status of HIC
V. Rulemaking Analyses and Notices

I. Executive Summary

The agency has determined that the HIII–10C dummy, configured as described in this document, is a suitable and useful test device for quantitative assessment of child restraint systems (CRSs) and other safety devices for older children. The dummy, with a weight of 35.2 kilograms (kg) (77.6 pounds (lb)) and sitting height of 71 centimeters (28 inches), is ideally suited to test the upper load and height limits of safety restraints for children.

The dummy is specified by this rule by a technical data package (TDP) consisting of a set of engineering drawings, a parts list, and a set of procedures for assembly, disassembly, and inspection (PADI) of the dummy. Additionally, this rule amends 49 CFR part 572 to specify qualification requirements for the dummy, to assure that the HIII–10C responses are within established performance corridors, and further ensure the uniformity of dummy assembly, structural integrity, consistency of response and adequacy of instrumentation. The TDP and qualification requirements assure that HIII–10C dummies are uniform in their design, construction and kinematics.

The drawings and the PADI for the HIII–10C are available for examination in the docket for this final rule. Technical reports and other materials pertaining to this final rule have also been placed in the docket for this final rule.

The notice of proposed rulemaking (NPRM) on which this final rule is based was published July 13, 2005 (70 FR 40281).

The agency is concurrently publishing in this issue of the **Federal Register** a final rule to amend Federal Motor Vehicle Safety Standard (FMVSS) No. 213, ''Child restraint systems'' (49 CFR 571.213), to adopt use of the HIII–10C dummy in agency compliance tests of CRSs. (RIN 2127–AL10, formerly RIN 2127–AJ44.)

The final rules bring to a close NHTSA's work on Public Law 107–318, 116 Stat. 2772 (''Anton's Law''), which contained provisions for NHTSA to develop and evaluate a test dummy that represents a 10-year-old child for use in testing CRSs. Public Law 107–318 required us to initiate rulemaking on the Anthropomorphic Test Device (ATD), a mandate we satisfied in 2005 when we published an NPRM to adopt the HIII–10C into FMVSS No. 213.[1]

When we published the 2005 proposal to include the dummy in FMVSS No. 213, we proposed that booster seats must conform to several new requirements based on HIII–10C measurements, including a head injury criterion (HIC). As part of our assessment, we demonstrated in our pre-proposal testing that, while most CRSs conformed to the new requirements, there were some failures, including those where HIC was exceeded. However, during extensive post-NPRM booster seat testing, inconsistencies in the test protocol revealed variability in the kinematics and measurements of the HIII–10C. In particular, the agency discovered that a slight perturbation in the test protocol could create a large change in HIC. The variability in HIC measurements is attributable to a design feature unique to the HIII–10C in which chin-to-chest contact during the impact event can be excessively hard, but not easily controlled through CRS design.

Subsequently, the agency devoted substantial rulemaking and research efforts to try to address test variability. The August 31, 2005 (FMVSS No. 213) NPRM was followed by a supplemental NPRM (SNPRM) published in 2008[2] and an SNPRM published in 2010.[3] Throughout the rulemaking proceeding, NHTSA informed the public of its research findings, concerns and ideas about using the HIII–10C in FMVSS No. 213, and in turn learned from comments from research organizations, consumer groups, CRS, vehicle, and ATD manufacturers, and others. Considerable effort was devoted to revising the test protocol to eliminate variability in HIC.

The endeavor has led to a new dummy positioning procedure that improves test repeatability with no substantial change to the HIII–10C. The agency has determined that the HIII–10C is an important ATD that will enhance our ability to assess the performance of CRSs and other occupant protection systems in protecting children.[4] In the accompanying FMVSS No. 213 final rule published today, we adopt the HIII–10C into FMVSS No. 213, but due to the recurrence of hard chin-to-chest

[1] 70 FR 51720 (August 31, 2005). Among other matters, Public Law 107–318 directed NHTSA to evaluate an anthropomorphic test device (ATD) that simulates a 10-year-old child for use in testing CRSs and to initiate a rulemaking proceeding for the adoption of the ATD. NHTSA addressed other provisions of Public Law 107–318 in earlier agency actions. These actions are discussed in the preamble of the August 31, 2005 NPRM.

[2] 73 FR 3901 (January 23, 2008). This SNPRM proposed a seating procedure for the HIII–10C to minimize the chin-to-chest impacts. Commenters were generally unsupportive of the procedure.

[3] 75 FR 71648 (November 24, 2010). This second SNPRM proposed an alternative seating procedure for the ATD.

[4] The HIII–10C represents children of a size heretofore not represented by the ATDs used in NHTSA regulations. The child ATDs in 49 CFR part 572 that NHTSA uses for testing CRSs are ATDs representing a newborn infant, a 12-month-old, a 3-year-old, a 6-year-old, and a weighted 6-year-old. In 49 CFR part 572, there is also specified a 5th percentile adult female ATD, which is approximately the size of a 12-year-old.

contacts, we will not adopt HIC as an FMVSS No. 213 injury criterion.

The agency has thus decided that the HIII–10C is a suitable device for use in FMVSS No. 213. The HIII–10C test dummy will provide an enhanced assessment of child restraint performance, and is worthy of adoption into 49 CFR part 572 as implemented by this final rule.

II. Background

a. 2005 NPRM

In July 2005, NHTSA issued an NPRM proposing specifications and certification requirements for a new test dummy representative of a 10-year-old child (70 FR 40281, July 13, 2005). The dummy was proposed to be included among the descriptions of anthropomorphic test devices in 49 CFR part 572, so that it could be called out for use in FMVSS test procedures and other regulations. Concurrently, NHTSA proposed to use the new dummy to assess CRSs recommended for older children under FMVSS No. 213 (70 FR 51720, August 31, 2005). These two NPRMs are referred to herein as the Part 572 NPRM and the FMVSS No. 213 NPRM, respectively.

b. Developments Since 2005

Additional rulemaking notices. Since the two NPRMs were published in 2005, the agency issued two supplemental NPRMs that dealt with the unrealistic ''chin-to-chest'' condition that occurred when the HIII–10C was used in the FMVSS No. 213 sled test environment. This condition was first observed in agency tests that led up to the 2005 NPRMs. In several of the tests, as the HIII–10C's head flung forward, the neck flexed to the point where the dummy's chin came into hard contact with its upper thorax. This chin-to-chest contact at times produced elevated head accelerations. However, in the testing that led up to the 2005 NPRMs, we did not foresee a problem with the chin-to-chest contact because the majority of booster seats tested met the FMVSS No. 213 head injury criterion (HIC) limit of 1000.[5]

Commenters to both NPRMs of 2005 also observed hard chin-to-chest contact in their own tests. Some commenters (Dorel Juvenile Group (Dorel), Graco Children's Products (Graco)) expressed concerns the chin-to-chest contact was an indication of poor spine biofidelity and urged NHTSA to undertake additional testing of the HIII–10C to ensure that the test dummy is appropriate for use in FMVSS No. 213 testing.

[5] 70 FR at 51724.

Following these comments, NHTSA conducted further testing of the HIII–10C to investigate the chin-to-chest contact. We concurred with the commenters that the hard chin-to-chest contact exhibited by the HIII–10C in sled tests was an undesirable occurrence. The hard contact was unrealistic, as real-world accident data indicated that children do not sustain head injuries in that manner. The chin-to-chest contact is much less prevalent in the kinematics of actual children because the child's spine is more flexible than that of the ATD. The added flexibility of a child's spine allows greater forward translation and rotation of the head. When chin-to-chest contact occurs in children, it does not produce as hard of a contact as the dummy and does not result in severe injuries. Moreover, we found that HIC values produced by the HIII–10C were highly variable when chin-to-chest contact occurs, as the dummy was not designed to achieve repeatable or reproducible responses under this condition.

In consideration of the likelihood of unreasonably high HIC values, the agency issued the 2008 SNPRM that mitigated chin-to-chest contact by specifying a posture that was about 10 degrees more upright than the HIII–10C positioned in a CRS under the original NPRM (73 FR 3901). However, this proposal was widely criticized in comments to the SNPRM. Some commenters believed that the upright positioning procedure was unrealistic because it did not reflect the way children actually sit in booster seats. Some also indicated that a belt routing system or harness designed for an upright ATD may introduce unwanted belt slack when applied to a fully reclined child. They believed this could add to head excursion and preclude a CRS from performing its primary function of properly positioning a vehicle's seat belt to a child occupant. Additionally, some commenters found the procedure to be cumbersome and difficult to follow.

Following a test program conducted in response to these comments, on November 24, 2010 the agency issued a second SNPRM for positioning the HIII–10C (75 FR 71648). The 2010 SNPRM replaced the proposal for the upright positioning procedure with a procedure developed by the University of Michigan Transportation Research Institute (UMTRI). The UMTRI procedure emphasizes fitting the dummy to the CRS rather than achieving a specific dummy posture. In trial tests run by the agency using the UMTRI procedure, we found the repeatability of all test measurements to be greatly improved relative to those observed under the seating procedures we had proposed previously. Because the UMTRI procedure typically results in an ATD posture similar to that associated with the seating procedure used in the original NPRM of 2005, chin-to-chest contact continued to occur. Thus, we proposed using the UMTRI procedure when positioning the HIII–10C in FMVSS No. 213 tests, but proposed that HIC would not be used as a performance criterion in FMVSS No. 213 when using the HIII–10C.

Supplemental testing. Since the NPRMs of 2005, the agency has used the HIII–10C in about two hundred sled tests to support the FMVSS No. 213 SNPRMs, to address the comments to the Part 572 NPRM, and to arrive at the final configuration of the dummy. We have acquired four additional HIII–10C units to add to our repeatability and reproducibility assessment. In this period since 2005, we have made a comprehensive assessment of the ATD to examine the many issues brought up in comments received on the four rulemaking proposals.

The test results permitted us to examine and evaluate the consistency of the data and adequacy of the dummy in a broad range of CRSs available in the market. Of the approximately 80 models of booster seats manufactured since 2006,[6] twenty seats from eight different manufacturers have been tested with the HIII–10C since the Part 572 NPRM. Another fourteen seat models manufactured prior to 2006 have also been tested. This spectrum represents a good cross-section of the booster seat market and demonstrates well the utility of the HIII–10C under all installations.

Utility of the HIII–10C. Our supplementary testing has reaffirmed that the HIII–10C is a meaningful ATD for use in FMVSS No. 213 and merits incorporation into 49 CFR part 572 even without NHTSA's use of HIC as an FMVSS No. 213 pass/fail criterion. Additional qualification data obtained since 2005 has confirmed the high level of repeatability and reproducibility that was demonstrated in the NPRM on a limited data set.[7] As reported in this

[6] To assist consumers in deciding which CRS to purchase, NHTSA provides ease of use ratings for child seats. We attempt to select and rate all seats on the market. Currently, we provide about 80 ratings of seats designed for children weighing 36.3 kg (80 lb) or more and manufactured since 2006. There are 23 different manufacturers represented in our selection of seats.

[7] Except to the extent discussed in this document regarding chin-to-chest contact, NHTSA confirms the NPRM's discussion of the findings that the HIII–10C is a biofidelic ATD that produces repeatable and reproducible results. A detailed discussion of

Continued

preamble, the qualification corridors indicate outstanding dummy repeatability and reproducibility. Throughout the entire test experience, the HIII–10C has proven to be a durable test instrument.

The additional data also confirms the qualification of HIII–10C-based injury metrics. Other than HIC, all other dummy-based measurements used in FMVSS No. 213—head excursion, knee excursion, and chest acceleration—have proven to be sound metrics appropriate for CRS testing. A NHTSA-sponsored study published in 2008 found the head excursion of the HIII–10C to be very similar to a human subject in matched pair tests.[8] Also, the agency has observed a strong correlation between knee excursion and submarining in child dummies. As such, knee excursion correlates indirectly with abdominal injuries. The limit on knee excursion prevents CRS manufacturers from controlling head excursion by designing their restraints so that children submarine in a crash.

The limit on chest acceleration ensures that a CRS provides a child with sufficient ''ride down'' or absorption of crash forces over a period of time in a manner that avoids injury. The revisions to the HIII–10C described in this preamble assure that the chest acceleration measurements are devoid of any signal irregularities. The HIII–10C will also be used in FMVSS No. 213 to assess the structural integrity of CRSs for older children.

Recent agency studies have also demonstrated that the HIII–10C has sufficient biofidelity to be used in possible belt fit programs. Our research has found lap and shoulder belts to fit the HIII–10C much like they do a human.[9] The dummy was found to sit in a seat like a human child and don the belt like a human child.

The agency has also recently completed studies on the HIII–10C's utility and biofidelity in assessing submarining and abdominal injury.[10] In summary, we have found the HIII–10C to be sufficiently biofidelic to mimic the kinematics of a belted human child. The dummy was found to be sensitive to a range of lap belt and torso belt anchorage configurations and its propensity to submarine was consistent with that of a belted child. Given these positive results, the agency is pursuing the development of an HIII–10C modification consisting of an abdominal insert that measures abdominal deformation, thus providing a direct assessment of injury risk.

c. Summary of Decision

The data available since 2005 support a decision that the HIII–10C is a suitable device for use in FMVSS No. 213. Adopting the HIII–10C in 49 CFR part 572 enables NHTSA to expand the applicability of FMVSS No. 213 to CRSs that are recommended for children over the current 35.2 kg (65 lb) weight limit in a meaningful way. There has been considerable interest over the years in expanding the applicability of FMVSS No. 213 to increase the likelihood that child restraints for older children (e.g., booster seats) will perform adequately in a crash. This interest goes hand-in-hand with efforts to prolong CRS use among children who have outgrown their child safety seat, but who cannot adequately fit a vehicle's lap and shoulder belt system. Adopting the HIII–10C into 49 CFR part 572 enhances NHTSA's ability to reduce unreasonable risks of traffic crashes to older children.

III. Summary of Comments

We received comments on the Part 572 NPRM from: The American Academy of Pediatrics (AAP), Children's Hospital of Philadelphia (CHOP), Advocates for Highway and Auto Safety (Advocates), Dorel, Chrysler, the Alliance of Automobile Manufacturers [11] (Alliance), and a joint submission from ATD manufacturers First Technology Safety Systems (FTSS) and Denton ATD (Denton) (FTSS/Denton).[12] Some of the comments on the FMVSS No. 213 SNPRMs raised issues pertaining to the Part 572 rulemaking, which we discuss in this document as appropriate. Additional organizations commenting on the FMVSS No. 213 rulemaking include Graco, the Juvenile Product Manufacturers Association (JPMA), and Consumers Union.

Commenters were very supportive of the idea of incorporating an ATD representing children in the 8- to 12-year-old age range. There was general support for the HIII–10C's incorporation into Part 572, but as indicated above, concerns were raised about the chin-to-chest contact. Dorel expressed opposition to the adoption of the HIII–10C, citing concerns about the ATD's biofidelity, durability, and compatibility with the FMVSS No. 213 test environment. Some comments suggested adjustments and clarifications to the Part 572 proposed regulatory text, to improve the procedures for qualifying an ATD and the performance assessments.

The following major categories of issues were raised: (a) Functionality of the HIII–10C as a Part 572 ATD; (b) durability of the ATD; (c) qualification procedures and requirements; (d) the TDP (the engineering drawings and PADI); (e) other issues (clarifying agency statements in the preamble); and (f) dummy development efforts. Each of these areas is discussed below.

IV. Response to Comments

a. Functionality of the HIII–10C as a Part 572 ATD

1. Chin-to-Chest Contact

As described earlier in this preamble, the agency received many comments regarding the undesirable chin-to-chest contact exhibited by the HIII–10C, which is related to the biofidelity of the HIII–10C's spine. Dorel, the Alliance and others reported chin-to-chest contact during normal use of the dummy, which was believed to be brought on by an overly stiff thoracic spine relative to human children.

We agree that the hard chin-to-chest contact in FMVSS No. 213 sled tests is an undesirable characteristic of the HIII–10C. Chin-to-chest contact has also been observed in tests run by the agency. In most cases, the time interval producing the highest calculation of HIC enveloped the instant when chin-to-chest contact occurred, including cases where head acceleration was very high. In other words, chin-to-chest contact often caused HIC to exceed the injury assessment reference value (HIC_{36} = 1000).

The design of the neck-to-thorax joint in the HIII–10C differs from other dummies in the Hybrid III family. In the other dummies, the neck is off-set or

the HIII–10C's biofidelity can be found in the NPRM, see 70 FR at 40284. The repeatability and reproducibility of the HII–10C is discussed in the NPRM at 70 FR at 40285. Commenters did not disagree with these aspects of the dummy, except as discussed in this document regarding the chin-to-chest contact.

[8] Ash, JH, Sherwood, CP, Abdelilah, Y, Crandall, JR, Parent, DP, Kallieris, D., ''Comparison of Anthropomorphic Test Dummies with a Pediatric Cadaver Restrained by a Three-point Belt in Frontal Sled Tests,'' Proceedings of the 21st International Technical Conference on the Enhanced Safety of Vehicles, June 2009.

[9] Reed, M., Ebert-Hamilton, S., Klinich, K., Manary, M., Rupp, J., ''Assessing Child Belt Fit, Volume I: Effects of Vehicle Seat and Belt Geometry on Belt Fit,'' UMTRI Report No. UMTRI–2008–49–1, University of Michigan, Ann Arbor, MI, September 2008.

[10] Reed, M., Ebert-Hamilton, S., Klinich, K., Manary, M., Rupp, J., ''Assessing Child Belt Fit, Volume II: Effect of Restraint Configuration, Booster Seat Designs, Seating Procedure, and Belt Fit on the Dynamic Response of the Hybrid III 10-year-old ATD in Sled Tests,'' UMTRI Report No. UMTRI–2008–49–2, University of Michigan, Ann Arbor, MI, September 2008.

[11] At the date of the October 3, 2005 comment, the Alliance consisted of: BMW Group, DaimlerChrysler; Ford Motor Company; General Motors; Mazda; Mitsubishi Motors; Porsche; Toyota; and Volkswagen.

[12] In 2010, FTSS and Denton announced that they have merged into one company, Humanetics, Inc.

cantilevered anterior to the thorax, which is not optimal anthropometrically. In the HIII–10C, the upper part of the thorax spine structure has been designed such that the neck-to-thorax joint is an in-line connection following more closely the anthropometry of a human. The lower neck bracket described earlier serves at the neck-to-thorax joint.

The downside to the improved anthropometry is that it creates a ''hard spot'' during chin-to-chest contact. The stiff lower neck bracket is where the chin comes into contact with the chest and where only a thin layer of soft flesh material offers any buffer. Beyond a few millimeters of flesh material compression, chin-to-chest contact forces—and head accelerations—increase exponentially. As a result, a small deviation in head motion causes a very large change in head acceleration and HIC. The change is difficult to control and may be in conflict with good CRS design. In some cases, HIC scores have been shown to improve when the torso belt fit is degraded.[13] Since chin contact to the thorax is not a natural brain injury path in actual children, any such attempt to lessen HIC through booster seat design may compromise the overall safety performance of the seat.

Due to the non-biofidelic chin-to-chest contact, we have decided not to require CRSs to meet the HIC criterion when tested with the HIII–10C in the compliance of FMVSS No. 213, as announced in the FMVSS No. 213 final rule published today. When we followed the UMTRI seating procedure adopted in the final rule for FMVSS No. 213, we found that the seating procedure reduces HIC variability in repeat tests of the same booster seat, including those in which hard chin-to-chest contact occurs. However, hard chin-to-chest contact was still observed in many agency tests. Mitigating this effect altogether, as recommended in comments by Dorel, would require a major redesign of the entire thorax and spine, which is not feasible. Instead, the agency is concentrating efforts on developing an entirely new pediatric dummy for future use, as discussed later in this preamble.

Nonetheless, we did make minor changes to the HIII–10C to mitigate some of the effects of the chin-to-chest contact in accordance with a recent agency study.[14] This Part 572 final rule specifies the thickness of the HIII–10C's chin flesh in the inferior-superior direction. The new specification is aimed at lessening the variability of head accelerations among different dummies when chin-to-chest contact does occur.

The chin flesh specification improves the functionality of the HIII–10C as an ATD, even though we have decided not to use HIC as an FMVSS No. 213 pass/fail criterion when using the dummy. HIC may continue to be measured in FMVSS No. 213 tests with the HIII–10C for research purposes, and could be used as a performance metric in other NHTSA programs (e.g., out-of-position (OOP) air bag tests, New Car Assessment Programs). Standardizing the thickness of the chin will improve the repeatability of the HIC measurements from different dummies when chin-to-chest contact occurs. Hard chin-to-chest contact may be a concern to researchers investigating the whipping actions of the head. The chin specification will better enable them to compare HIC measurements in tests with different dummies.[15]

2. Shock Emanating From Shoulder and Neck

Chrysler[16] and Graco were concerned that spikes or ''noise'' is present in the signal traces of accelerometers and load cells in the head and upper torso of the HIII–10C. In evaluating these comments, we determined that the presence of these spikes has no consequence on the use of the HIII–10C as a regulatory tool as specified in the final rule for FMVSS No. 213. The only instruments within the HIII–10C that will be used in FMVSS No. 213 are accelerometers arranged triaxially at the center of gravity (CG) of the chest. In all agency tests in which these spikes appeared in the accelerometer signals, they were removed by the signal processing algorithms used to compute the chest acceleration criterion.[17]

The routines used to compute chest G's include a standard SAE International (SAE) Channel Frequency Class (CFC) 180 filter and a 3 millisecond (ms) clip.[18] The 3 ms clip originated in 1970 for use in FMVSS No. 208, ''Occupant crash protection,'' in recognition that such spikes are insignificant as injury contributors (35 FR 14941). The spikes in the data of the HIII–10C were caused by two sources other than by chin-to-chest contact: part-to-part contact between components of the shoulder assembly, and a loose fitting neck cable that interfered with the lower neck load cell. Spikes emanating from the shoulder and neck of the HIII–10C were not always completely removed by CFC180 filtering of the chest acceleration signals, but once they were ''clipped'' by the 3 ms algorithm, they had no measureable effect on the computation of chest G's. Moreover, in most cases the time interval containing the peak acceleration identified by the algorithm did not contain the spike, which usually occurred later in the event. Thus, the injury reference measures for the HIII–10C's immediate use in FMVSS No. 213 (chest acceleration, head and knee excursion) are not affected by this condition.

The shock emanating from the shoulder and neck is benign in terms of its effect on the dummy itself (the acceleration spikes are no greater than 150 G's). It does not affect the kinematics of the dummy in any way (i.e., the head trajectory and knee excursion are unaffected). The magnitude of the spikes is well within the typical operating range of +/− 2000 G's for the specified accelerometers, so shock damage to the instruments is unlikely.

Nonetheless, although the shocks do not influence the outcomes of FMVSS No. 213 tests, we made the following simple modifications to the HIII–10C's shoulder and neck to lessen the shock effect. Improving the ATD in this manner assures that the dummy is better suited for possible future uses in tests where computations for head injury assessments based on head accelerometer signals are more sensitive to the condition (e.g., OOP air bag tests).[19]

i. Shoulder Revision

The TDP of this final rule modifies the shoulder design of the HIII–10C.

Similar to a human, the shoulder of the HIII–10C provides the load bearing surface for the shoulder belt. On the dummy, the part that provides this surface is a one-piece aluminum casting that is connected to the spine via a yoke that extends laterally from the spine. The yoke-to-shoulder connection is a

[13] 2008 UMTRI Vol. 2 Report

[14] Stammen, J., Bolte, J., Shaw, J., ''Biomechanical Impact Response of the Human Chin and Manubrium,'' Annals of Biomedical Engineering (2011, in press).

[15] Because we are measuring HIC for research purposes, this final rule adopts the proposed qualification test for the HIII–10C head measurements.

[16] Docket No. NHTSA–2005–21247–0016.

[17] The chest acceleration criterion specified in FMVSS No. 213 is 60 G's.

[18] The 3 ms clip truncates the peak acceleration portion of a continuous signal having a duration less than 3 milliseconds.

[19] The computation of HIC applies a higher signal filter class (CFC 1000 vs. CFC 180) and does not impose a 3 ms clip. The revisions do not affect the assessment of CRSs with regard to FMVSS No. 213, so this change will not delay the incorporation of the HIII–10C into Part 572.

pivot which provides medial-lateral movement (i.e., pivoting about the z-axis) in a direction that is dependent upon the position of the shoulder belt. If the belt lies close to the neck, the shoulder will pivot inward; if it is on the edge of the shoulder it will pivot outward. The piece of the shoulder casting that contains the pivot hole has a finger-like protrusion. As the shoulder pivots, the finger acts as a cam by compressing a rubber pad that is glued within the yoke. This provides resistance to the z-axis pivoting.

Compared to Hybrid III adult dummies, the shoulder design of the HIII–10C is anthropometrically improved. For the adult dummies, the shoulder is an assembly of two halves that are joined medially-laterally. The mid-joint provides the z-axis pivoting for each half. By eliminating the mid-joint, the HIII–10C is able to provide a more biofidelic interaction with the shoulder belt during a dynamic event. Because it is made from one part instead of two, the HIII–10C shoulder was able to be designed with a sloped, uniform shoulder belt bearing surface.

The improved design of the HIII–10C is made possible by the new configuration of the upper thorax in which the offset of the neck has been eliminated. The HIII–10C shoulder design allows more realistic movement of the belt along the shoulder during a dynamic event. Furthermore, since the surface that bears the load of the shoulder belt is a one-piece casting, the designers of the dummy were able to build in a shoulder load cell. Although it is not currently used for regulatory purposes, the load cell is very useful in research and development activities to study belt load distributions across the torso.

Notwithstanding its simpler design, the new shoulder has had problems over the years. In early versions of the design (pre-NPRM), the shoulder had a tendency to over-pivot to the point where the finger protrusion was bottoming out the rubber pad. In the 2001–2002 timeframe, the shoulder went through two design revisions in an attempt to rectify the situation by relocating the shoulder pivot hole and trimming the yoke.

As indicated by the Graco and Chrysler comments, the Part 572 NPRM version of the shoulder could still be improved. Before the finger bottoms out the pad, metal-to-metal contact occurs between the yoke and the shoulder in one or more places. Shock from this contact appears as short-duration spikes of up to 150 G's in the signals of accelerometers closest to the shoulder. Spikes of a lesser extent also appear in neck load cell signals. Chrysler ran sled tests to identify the shoulder-yoke contact points by means of transfer paint, and reported these results to the agency.[20]

To address the spikes, as reflected in the TDP for this final rule, we have revised the shoulder and yoke assembly to lessen the effect of the two parts bottoming out against each other. More clearance has been created for the shoulder to move by reconfiguring the shoulder casting and the yoke assembly by making them both narrower. This modification does not affect the biofidelity of the ATD or the reproducibility or repeatability of the responses because the neck response and sled kinematics were not affected by the shoulder revisions.

Complete details of the modifications are described in an agency technical report that may be found in the docket for this final rule.[21]

ii. Lower Neck Revision

This final rule makes simple modifications to the HIII–10C's lower neck load cell and fasteners associated with the neck safety cable to lessen the shock effect.

The safety cable of the HIII–10C neck is common to all ATDs in Part 572. It is a steel wire rope that runs through the center of the molded neck to prevent total separation of the head from the torso under an extreme test condition. The rope is fitted with swages at both ends: a ball-end at the superior end and a threaded stud-end at the inferior end. The ball-end is larger than the diameter of the neck's through-hole to prevent it from passing through the neck. On the inferior end, a nut is used to tighten the threaded swage, which places the cable under tension and the molded neck under compression. A secondary jam nut serves as a lock. According to the NPRM and final rule specifications, the nut should be tightening to a torque setting of 8 +/− 2 inch-pounds (in-lbs) before each test.

The entire neck assembly is joined to the spine by means of a specialized bracket that allows the neck to be set at different forward tilt angles. A through-hole runs through the center of this bracket allowing access to the end fitting of the wire rope so that it may be tightened without removing the bracket from the neck. In lieu of the bracket, an optional part is available for the HIII–10C containing a lower neck load cell. It has the same general configuration as the un-instrumented bracket, except the through hole has a smaller bore.

Shock emanating from the neck has been observed when either the bracket or an optional part containing a lower neck load cell is used. (The load cell is not needed in tests carried out under FMVSS No. 213.) When the neck goes into extreme flexion (a 90 degree bend is specified in the qualification test), the center cable is not sufficiently taut to prevent its movement within the center channel of the neck. As a result, the steel washer and nuts on the threaded swage move within the free space provided by the center hole and can come into contact with the inner walls of the through-hole. To mitigate this condition, the washer has been changed from steel to nylon. Also, the lower neck load cell and its structural replacement have been revised since the Part 572 NPRM. For each of these two parts, a sleeve made of soft, dampening material is now used to line the through-hole and prevent rattling of the nuts. The load cell revision also carries over the capacities specified in the NPRM which were increased for some channels where data was truncated in pre-NPRM agency tests using a previous load cell.[22]

In a related problem, a premature wear problem has been observed in the agency's HIII–10C units and reported in comments provided by Dorel. The molded neck itself has two polymeric bushings, one at each end of the neck, through which the cable passes. The bushings prevent the steel rope from abrading the internal through-hole of the neck. However, the aforementioned cable movement tends to abrade the neck channel and chafe the lower polymeric cable bushing.

To avoid problems such as those noted by Dorel, the polymeric bushing should be inspected on a periodic basis. The bushing is an inexpensive part that may be readily inspected and replaced during the course of running the neck qualification tests. We note that setting the neck cable to the proper torque is key to the longevity of the bushing. The torque setting is also critical to passing the qualification requirement for the neck. In addition, we also found that the torque setting of the neck cable nut significantly affects the head excursion and the upper neck moment within the sagittal plane (about the y-axis).

We also found that, when left unchecked, the threaded stud-end could wear through the plastic collar and chafe the outer aluminum disc of the

[20] Id.

[21] "Revisions to the HIII–10C Technical Data Package," NHTSA, August 2011.

[22] The revised load cell is a six-axis load cell. Maximum load capacities and several other load cell specifications are given on Drawing SA572–40 in the TDP.

molded neck after extended use. When the neck goes into extreme flexion, a chafed bushing can partially work its way out of the center through hole of the molded neck. This allows the wire rope to rub directly against the aluminum end plate of the neck, sending shock through the entire spine, which appears as noise in the signals of nearby sensors.

As described earlier, the signal noise emanating from the neck has no consequence on the use of the HIII–10C in FMVSS No. 213 because the noise is removed by signal processing algorithms. Nonetheless, the agency has implemented simple revisions to mitigate any shock emanating from the shoulder and lower neck. In addition to revising the lower neck load cell to preclude rattling, we have taken steps to lessen the effects of the chafing. A new bushing has been specified in the TDP with an increase to the flange thickness and with a smaller inner diameter, which reduces the clearance of the wire rope. The inner diameter of the cable washer has also been decreased to prevent it from sliding. Details of the new load cell, bushing, and washer, along with their effects, are reported in NHTSA's technical report, ''Revisions to the HIII–10C Technical Data Package,'' August 2011.

3. Stiffness of Vinyl Insert

Dorel indicated in its comments that it was having difficulty meeting the torso flexion test because the vinyl abdominal inserts it used were too stiff or too soft. Dorel had to mix and match inserts and lumbar flex joints in an attempt to pass the test. The commenter was concerned that the manufacturing variability for the inserts is too wide.

The agency has revised the specification of the abdominal insert by adding new dimensional requirements that improve manufacturing consistency and fit. The agency has also revised the PADI to include a section on how to position the abdominal insert within the pelvis cavity when running the torso flexion test. The specified setting of the insert governs its interaction with the chest jacket, lumbar spine, and ribcage, all of which influences the outcome of the torso flexion test. In agency tests, the new insert setting provided sufficient instruction to successfully carry out the torso flexion tests without having to mix or match inserts.

4. Dummy Availability

In its 2005 comments, Dorel claimed that no dummies were available on the market prior to the NPRMs of 2005 that satisfied the proposed Part 572 specifications. It listed nine changes to its version of the dummy relative to the version specified by the Part 572 NPRM of 2005. Thus, Dorel claimed that it was not given adequate opportunity to evaluate the proposed dummy.

We see no merit to delaying the final rule to either FMVSS No. 213 or Part 572 on the basis of HIII–10C availability. Several years have passed since the NPRMs were published in 2005, during which two additional NPRMs have been published on the use of the HIII–10C in FMVSS No. 213. This has provided commenters with ample time and opportunity to acquire, test, and submit comments to the docket about the HIII–10C. We note that in Dorel's comments to the SNPRM of 2008, it did not discuss any specifics on the HIII–10C other than those already provided in 2005 and addressed herein.

b. Durability of the HIII–10C

In its comments, Dorel reported on observed durability problems and breakage of the HIII–10C in its sled tests. No other commenters noted any problems related to these observations or any other damage.

As described earlier in this preamble, the agency has expanded our dataset of HIII–10C sled tests by about 200 tests and many more qualification tests since the NPRMs were published in 2005. In the whole of this extensive test regimen, the agency has studied many aspects of the dummy's performance including its functionality and durability. We have not observed any significant functionality or durability problems that would preclude the use of the HIII–10C use in FMVSS No. 213 or any other standardized test.

Each problem raised by Dorel is discussed below. Also included is a discussion of our own part replacement records assembled during the course of our post-NPRM evaluation of the dummy. No further changes to the dummy have been implemented as a result of these observations.

1. Proximal Femur

Dorel reported a broken casting in one of its HIII–10C units representing the proximal femur. Although Dorel did not describe how the failure occurred, we assume it was brought on by the ''flailing legs'' seen in FMVSS No. 213 tests. During the impact event, the lap belt retains the pelvis, while the legs spring forward placing a tensile load on the joint connecting the legs to the pelvis.

We had observed this type of failure in testing of an earlier, pre-NPRM version of the dummy. Since then, the dummy part representing the proximal femur was redesigned to eliminate the fracture problem. The part is now made of 4140 steel rather than C954 aluminum bronze, and a sharp corner stress riser has been rounded. In the photographs provided by Dorel, it appears that its failed unit had the older aluminum bronze casting. The new design was incorporated into the Part 572 NPRM version of the dummy and is specified in the version described in this final rule.

The femur has held up in all agency tests since the change was implemented to the pre-NPRM version. No further change to the dummy is necessary.

2. Bib Assembly

Dorel provided a picture of a torn bib assembly, without further discussion, in its response to the Part 572 NPRM. The extent of the testing to produce this damage was not described.

The agency has not encountered any instances of torn bib assemblies in our extensive testing experience with the HIII–10C, but we have seen occasional abrasions on some bib assemblies of other Part 572 dummies. They were caused by the shoulder belt pressing against and eventually rubbing through the chest jacket during multiple severe test exposures. This may have been the case for Dorel, based on its general comment that it had performed ''65 dynamic sled tests run at DJG [Dorel Juvenile Group] to the new [FMVSS No.] 213 standard bench and pulse using the HIII–10C dummy,'' in addition to other dynamic sled tests conducted at a contract laboratory. Given that the tear is likely caused by excessive wear-and-tear, the agency has not revised the bib assembly.

3. Shoulder Rotation Stop Screws

The arm of the HIII–10C is connected to the shoulder through a yoke that acts as a two degree of freedom joint which allows the arm to flex, extend, and rotate axially. Affixed to the yoke is a protrusion, or ''shoulder rotation stop,'' that limits the range of motion of the shoulder in axial rotation (i.e., it cannot complete a 360 degree circuit). So, when the arms of the HIII–10C flail forward and extend during a dynamic test, the stops prevent the arms from rotating all the way up and around behind the body.

Dorel provided photos showing that the screws holding the rotation stop in place in its HIII–10C unit had sheared off. Dorel stated that it repaired the part by welding the stop into place, but the commenter provided no further discussion.

The agency has not experienced this type of failure in any of our tests of the HIII–10C, and we do not know the

circumstances that led to the failure in the Dorel unit. In the absence of information that a problem exists or that it is recurring, we find no need to change the HIII–10C with regard to the shoulder stop.

4. Agency Part Replacement Records

Since the NPRMs of 2005, NHTSA has continued to monitor the durability of the HIII–10C, as we do routinely with all of our ATDs. A summary of our records is provided below. In general, a part within a dummy is replaced for one of two reasons: Because it was damaged during a test or because it has become worn and unserviceable after extensive use. As described below, our experience indicates that all part replacements were made under the latter circumstance. The records thus show good durability of the HIII–10C.

i. Pelvis Helicoil Insert

Throughout our post-NPRM testing experience of about 200 sled tests, the agency observed only one instance of a part failure that appeared to have affected the outcome of the test. This failure was brought on by flailing legs, which caused the femur to separate from the pelvis due to the failure of a helicoil.[23] ''Helicoil'' is the product name of a steel fastener that provides positive thread locking into soft metals like aluminum or bronze.

Three helicoils are inserted into the HIII–10C's aluminum pelvis casting so that the flange that retains the proximal head of the femur may be bolted directly to the casting. After one of our tests, we noticed that the flange had separated from the pelvis. Upon closer inspection, we found that a helicoil had disengaged from the pelvis. This failure has not recurred. Moreover, a helicoil failure is typically gradual as its threads loosen from the base material over time. A thorough pre-test inspection can usually spot helicoil looseness so that repairs may be made, thus mitigating the likelihood of a test failure. Therefore, a revision to the flange fastening system is unnecessary.

ii. Neck and Ribcage Replacement

Like all ATDs in the Hybrid III family of dummies, the deformable parts of the HIII–10C have the shortest service lives. The two most often replaced parts on the HIII–10C are the ribcage and the molded neck. Worn ribs are usually detectable by examining them for overly gouged or delaminated damping material. Unserviceable molded neck assemblies are not noticeable by visual inspection, with the exception of chafed cable bushings as described earlier.

The conditions of the ribs and neck are monitored directly through the Part 572 qualification procedures. In our experiences with the HIII–10C, the decision to remove a rib set or neck from service has always been made during pre-test qualification procedures when the thorax impact or the neck flexion/extension test qualifications cannot be met after a few trials. The typical service life for HIII–10C rib sets and neck assemblies alike are about thirty sled tests. We have not had a situation where failure occurred during a sled test of any kind.

iii. Other Replacements

According to our records, flesh materials—particularly the chest flesh—are the only other parts that have been replaced on a recurring basis. As with flesh materials of all ATDs, those of the HIII–10C are replaced periodically as they become aged, abraded, or torn. Deterioration of these parts is easy to identify so that they may be repaired or replaced well before they deteriorate to the point where their condition may affect test results. They are also relatively inexpensive (chest flesh is the highest priced flesh material item: $650) and easy to service.

5. Durability Summary

Given the record of low maintenance to our own HIII–10C units and the relatively few complaints noted by commenters, we consider the dummy to be highly suitable for use in FMVSS No. 213 in terms of its durability. Our records indicate that there have been relatively few instances of HIII–10C part replacements of any sort. When we have replaced parts, it has always been due to extensive service, not a sudden failure. Replacement of worn parts constitutes preventative maintenance that, when scheduled at regular intervals, will help to ensure valid test results.

c. Qualification Procedures and Requirements

Qualification procedures for the HIII–10C are basically the same as those proposed in the Part 572 NPRM, though some of the response corridors have been modified in consideration of additional qualification test data accumulated by the agency during our post-NPRM test experience. We also considered in our analysis a large qualification test dataset provided by the Alliance, amassed by members of the SAE International (SAE) Dummy Testing Equipment Subcommittee (DTESC). The much larger data set now allows us to base the setting of the corridors on an enhanced statistical analysis, providing even better assurance that the mean and the dispersion of the responses are representative of the dummies that the users will have to work with in the field.

Comments provided by the Alliance and echoed by FTSS/Denton recommended several changes to the performance corridors for the HIII–10C. In most instances, the commenters recommended changes that were specified by the DTESC based on a large dataset of qualification test results provided by participating organizations, including Chrysler, Ford, and General Motors, FTSS/Denton, Delphi, MGA, and TRW. The Alliance also recommended changes to the specification for impact probes and dummy instrumentation. The comments and our response thereto are discussed below.

1. Response Corridors

The corridors suggested by the Alliance are based on a range of 98 to 275 qualification tests per body segment from about 25 dummies. The Part 572 NPRM corridors were based on a range of 6 to 28 qualification tests per component performed on 2 dummies. Post-NPRM data accumulated by the agency contained qualification results from an additional 4 HIII–10C units.

The agency analyzed the data submitted by the Alliance and found that the suggested corridors and the coefficients of variation (CVs) were generally in good agreement with agency data. This good correspondence lent confidence that the data were of sufficient quality to be considered with agency data towards the establishment of performance corridors. The advantage of a larger sample size is that it allows for consideration of such factors as lab-to-lab, operator-to-operator, and dummy-to-dummy variability.

Upon consideration of the larger dataset, we found that our original corridors proposed in the Part 572 NPRM needed only fine-tuning. Summaries of the changes to each body region are given below. Full details of our analyses are contained in the technical report, ''Development of Qualification Performance Specifications for the HIII–10C Crash Test Dummy,'' December 2011, which has been placed in the docket for this final rule.

i. Head

The head qualification test consists of dropping the head onto a rigid surface from a height of 376 millimeters (mm)

[23] This was not the proximal femur casting part reported by Dorel.

(14.8 inch (in.)). Since the HIII–10C head is a Hybrid III 5th percentile adult female (HIII–5F) head, the same test procedure is specified as in 49 CFR part 572, Subpart O, which contains the specification for the HIII–5F ATD. The head drop is designed for the forehead to impact a flat, rigid surface at the midsagittal plane. The head response limit in these impacts is specified between 250 and 300 G's as proposed in the NPRM. No change was necessary to these limits, as the majority of data fit well and is well centered within the corridors.

ii. Neck

The head and neck assembly and the test procedures are the same as proposed in the Part 572 NPRM. The neck is evaluated for flexion and extension kinematics similar to that defined in 49 CFR part 572, Figure 15 and Figure 21. The head-neck assembly is mounted to the bottom of a pendulum that is being decelerated from a speed of 6.1 meter/sec (m/s) (20 feet/sec (ft/s)) for flexion and 5.03 m/s (16.5 ft/s) for extension at velocity reduction rates indicated in Table 1. The only difference between the final rule and the Part 572 NPRM is a corrected reduction in velocity specification at 10 ms for neck extension, changing from 1.59–1.89 ft/s to 1.49–1.89 ft/s. (The metric specification was correct.) The 1.59 ft/s specification reflected a typographical error.

TABLE 1—NECK REDUCTION IN IMPACT VELOCITY FROM INITIAL IMPACT IN FLEXION AND EXTENSION

Body region	Reduction in impact velocity from initial impact			
Neck (flexion)	Final rule		NPRM	
	ft/s	m/s	ft/s	m/s
at 10ms	1.64–2.04	5.38–6.69	1.64–2.04	5.38–6.69
at 20ms	3.04–4.04	9.97–13.25	3.04–4.04	9.97–13.25
at 30ms	4.45–5.65	14.60–18.53	4.45–5.65	14.60–18.53
Neck (Extension)	ft/s	m/s	ft/s	m/s
at 10ms	1.49–1.89	4.89–6.20	1.59–1.89	4.89–6.20
at 20ms	2.88–3.68	9.45–12.07	2.88–3.68	9.45–12.07
at 30ms	4.20–5.20	13.78–17.06	4.20–5.20	13.78–17.06

Neck flexion. The final rule performance corridors for maximum D-plane rotation of the head and moment decay time were revised from those proposed in the Part 572 NPRM. Even though the width of the D-plane rotation corridor remained unchanged, additional agency data and comments by the Alliance supported a statistically justifiable shift of the range upward from 74–88 degrees to 76–90 degrees (the Alliance recommended a 76.5–88.5 degree range). The corridor for moment decay time was adjusted to a slightly narrower range from 85–105 ms to 86–105 ms in the final rule. The combined NHTSA–Alliance data did not justify the selection of a narrower corridor suggested by the Alliance at 91–101 ms. In light of the good fit of the new qualification data within the previously established limits, the peak moment range within the rotation corridor remains unchanged from that proposed in the NPRM at 50–62 ms. The Alliance did not comment on this item.

Neck extension. All three neck extension performance corridors in this qualification test were adjusted slightly from those proposed in the Part 572 NPRM. The adjustments were needed to account for data received from the Alliance and the additional data generated in agency tests. The maximum D-plane rotation corridor was widened and shifted downward from 99–114 degrees proposed in the NPRM to 96–115 degrees for the final rule. The limits suggested by the Alliance were also 96–115 degrees.

Also, based on the additional data, in the final rule the corridor for peak occipital-condyle moment during the maximum rotation interval is revised to (−46)–(−37) Newton-meters (N-m), as compared to (−47)–(−35) N-m proposed in the NPRM, and (−47)–(−36) N-m recommended by the Alliance. The final rule specifies a moment decay time of 100–116 ms, as compared to 100–120 ms proposed in the NPRM, and 100–114 ms recommended by the Alliance.

iii. Thorax

The thorax qualification procedure is the same as that proposed in the Part 572 NPRM. It specifies a 6.0 m/s (19.7 ft/s) frontal impact within the midsagittal plane by a 6.89 kg (15.2 lb) round faced 121 millimeter (mm) (4.76 in) diameter probe into the mid-sternum of a seated dummy. Thorax impact responses are specified as the maximum sternum displacement, the maximum probe force at the time of maximum sternum displacement, the maximum probe force when the sternum displacement is between 20 mm and the lower bound of maximum displacement, and the internal hysteresis percentage between loading and unloading curves.

The NPRM proposed chest deflection limits of 40.5–48.5 mm, while the Alliance recommended 38.5–48.5 mm. Upon consideration of the full dataset, our analysis has led us to set the limits at 37–46 mm for the final rule. This downward shift was necessitated by a stiffer response seen in the most recent data in both NHTSA testing and in results submitted by the Alliance.

In light of the modified maximum chest deflection corridor, the limits of the peak probe force at maximum deflection and the peak probe force in the deflection transition zone (prior to the rib deflection reaching the lower corridor limit) were raised correspondingly. The former was changed from 1.83–2.33 kN in the NPRM to 2.0–2.45 kN in the final rule, while the latter was changed from <2.33kN in the NPRM to <2.52 kN in the final rule. Comparable Alliance recommendations were 1.95–2.45 kN for peak force at maximum deflection and <2.45 kN in the transition zone. Limits for hysteresis proposed in the NPRM were well-supported by the data and remained unchanged at 69–85 percent.

iv. Torso Flexion

The torso flexion test involves the determination of bending resistance of the upright seated dummy's lumbar spine/mid-torso area when the upper torso is quasi-statically flexed from its upright seated posture by 35 degrees relative to a lower torso. The resistance to bending is defined as the highest load

encountered during the bending process.

The final rule specifies a resistance of 180 to 250 N compared to that in the NPRM of 190–240 N. The adjustment was made in response to Alliance comments recommending a range of 178–249 N. The final rule limits are in near agreement with the Alliance recommendation, and are well supported by the combined Alliance-NHTSA data set. The final rule also specifies that upon removal of the flexion force the torso, the torso is required to return to within 8 degrees of its initial position. This is the same requirement that was proposed in the NPRM. Commenters did not recommend a revision to this requirement.

v. Knee Impact

The knee impact test is the same as that proposed in the Part 572 NPRM, consisting of a 2.1 m/s (6.9 ft/s) impact by a 1.91 kg (4.21 lb) flat-faced 76.2 mm (3.0 in.) diameter rigid probe into the knee of a HIII–10C leg assembly (including the tibia and foot), where the distal end of the femur is mounted rigidly to a reaction mass. For the final rule, the corridor for the force applied to the knee by the impactor is specified to be between 2.6 and 3.2 kN, as compared to 2.56 to 3.14 kN in the NPRM. The final rule specification is in agreement with recommendations made by the Alliance.

2. Summary of Qualification Requirements

A summary of performance specifications for the entire dummy, including those proposed in the Part 572 NPRM and those advocated by the Alliance, is provided in Table 2. Based on our analysis, the agency data were found in most instances to be in reasonably good agreement with the corridors suggested by the Alliance corridors. For measurements where our analysis of the data did not justify setting the corridors at Alliance recommendations, we searched for the best justifiable accommodation of both datasets within the limits of the biofidelity data.

As a general rule, performance corridors were set around ± 3 standard deviations from the mean for measurements with a CV<3 percent, at ± 2 standard deviations from the mean for measurements with a CV from 3 to 5 percent, and at ± 10 percent from the mean for measurements with a CV from 5 to 10 percent.

Table 2 indicates that all of the data leading to CVs for the final rule are within the 10 percent limit. Accordingly, all of the dummy based measurements related to their projected use as Injury Assessment Reference Values (IARVs) meet the requirements for inclusion into Part 572.

TABLE 2—FINAL RULE QUALIFICATION CORRIDORS AND COMPARISON WITH NPRM AND ALLIANCE RECOMMENDATIONS

Test	Response measurement or test parameter	Final rule corridor	NPRM corridor	Alliance suggested corridor	Full alliance/NHTSA dataset		
					Mean	S.D.	%CV
Head drop	Acceleration (g)	250–300	250–300	250–300	271	11.6	4.29
Neck pendulum, flexion.	Max D-plane rotation (deg)	76–90	74–88	76.5–88.5	83.05	3.28	3.95
	Peak O–C moment (N-m)	50–62	50–62	n/a	55.38	3.30	5.96
	Moment decay time to 10 N-m (ms)	86–105	85–105	91–101	96.63	3.88	4.01
Neck pendulum, extension.	Max D-Plane rotation (deg)	96–115	99–114	96–115	105.4	4.35	4.12
	Peak O–C moment (N-m)	(−46)–(−37)	(−47)–(−35)	(−47)–(−36)	−41.8	2.37	5.67
	Moment decay to –10 N-m (ms)	100–116	100–120	100–114	107.2	3.17	2.95
Thorax pendulum impact.	Sternum displacement (mm)	37–46	40.5–48.5	38.5–48.5	41.3	2.1	5.04
	Peak probe force defining the displacement corridor (kN).	2.0–2.45	1.83–2.33	1.95–2.45	2.227	0.113	5.06
	Peak probe force during the time when sternum displ. is 20 to 40.5 mm (kN).	<2.52	<2.33	<2.45	2.287	0.154	6.74
	Thorax hysteresis	69–85%	69–85%	69–85%	80.3	2.3	2.91
Torso flexion	Peak force at 35 deg from vertical (N)	180–250	190–240	178–249	213.3	18.7	8.8
	Return angle (degrees)	< 8, > −8	< 8, > −8	.....	5.2	1.7	note 1
Knee impact	Peak force (kN)	2.6–3.2	2.56–3.14	2.60–3.20	2.92	0.157	5.37

(1) The %CV does not apply to this measurement since the nominal requirement of zero degrees renders a %CV of infinite magnitude.

3. Impact Probes

For the dummies specified in Part 572 before 2000, impact probes used in qualification testing were assumed to take the form of a nearly perfect cylinder that could be specified by a material, weight, and diameter. In practice, a perfectly cylindrical probe is rare. Also, the addition of several new child dummies to 49 CFR part 572 called for a new assortment of lighter probes that were even more difficult to design in a pure cylindrical form due to their low weight. This created a situation where testing laboratories maintained a limited assortment of probe bodies, and then attained the proper probe characteristics by interchanging probe faces.

Beginning with our final rule for the Hybrid III 6-year-old child dummy (HIII–6C) in January 2000, the agency began to specify the minimum mass moment of inertia (MOI) and free air resonance for the various probes used in Part 572 qualification testing. This assured that vibratory effects were not present and that various probe configurations did not introduce differences in dummy response due to probe shape variations. At the same time, laboratories retained ample latitude to design impact probes. For the HIII–10C, the Part 572 NPRM specified a minimum mass moment of inertia as well.

In its comment, the Alliance took issue with our proposed specifications. It pointed out that the minimum thorax and knee pendulum mass moments of inertia as proposed in the NPRM at 2,040 kg-cm^2 and 140 kg-cm^2, respectively, were higher than those recommended by the SAE Hybrid III Dummy Family Task Group. In its comments, the Alliance included thorax and knee qualification data collected from multiple test facilities indicating minimal performance differences in qualification tests despite a variety of

test probes with different MOIs. It recommended that we revise our minimum specification to 1,463 kg-cm² for the thorax probe and 117 kg-cm² for the knee probe, as was called out in the original SAE specification of the dummy.

In our analysis of Alliance data, we examined round-robin tests performed on the same knee (or thorax) to isolate the effect of the different probe MOI on the response of that part. By only considering these tests, we eliminated the possibility that dummy reproducibility would confound the response data. Also, we only considered data from the sources where MOIs were known. Though it submitted test data from several laboratories, the Alliance provided probe MOIs from just three sources.

In comparing qualification test data using the Alliance probes with the lowest MOIs against data using our own probes, we found peak force measurements to be consistently lower with the Alliance probes. We note that the Alliance knee probe with the lowest MOI was still above our lower limit (152 kg-cm² vs. 140 kg-cm²), and the Alliance thorax probe with the lowest MOI was only narrowly under our limit (1,960 kg-cm² vs. 2,040 kg-cm²). Given the trend towards lower force response with lower MOIs and that the majority of Alliance probes are already within our MOI specification, the agency will not revise the probe specifications.

4. Instrumentation

i. Rotary Potentiometers

The Alliance pointed out an omission to the filter specification for rotary potentiometers that are typically used in the neck flexion and extension qualification tests. The potentiometers are used to measure the rotation of the head relative to the pendulum. The agency inadvertently overlooked the filter call-out in the Part 572 NPRM. We have revised the specification to include a 60 CFC call-out as was recommended by the Alliance. This call-out is consistent with SAE J211 and that of other Part 572 ATD specifications.

ii. Sternum Displacement

The Alliance pointed out that the CFC 180 filter specification for sternum displacement was not consistent with the SAE Recommended Practice J211, Rev. Mar 95, ''Instrumentation for Impact Tests—Part 1—Electronic Instrumentation,'' (SAE J211). It noted that Hybrid III dummies specified in 49 CFR part 572 subparts N (HIII–6C) and O (HIII–5F) call for the use of a CFC 600 filter for sternum displacement. This was a mistake in the Part 572 NPRM. We have revised the final rule to specify a CFC 600 filter for sternum displacement potentiometer signals.

d. Technical Data Package

The HIII–10C as specified herein is essentially the same as that defined in the Part 572 NPRM. A few minor revisions to the TDP have come about as a result of our experiences during extensive use of multiple HIII–10C dummies in the post-NPRM tests of booster seats. The revisions were corrective in nature; they do not affect the response of the dummy other than to remove unwanted artifacts. These include changes associated with improved functionality to the shoulder, neck cable bushing, and chin as described earlier. In addition, several typographical errors and other mistakes in print were uncovered. Comments associated with the TDP are discussed below.

1. Changes to the Engineering Drawings and PADI

FTSS/Denton requested a number of changes to the engineering drawings and PADI. These requests were echoed by the Alliance. For the most part, we agree with FTSS/Denton's requests and we have revised the TDP accordingly. The revisions are all aimed at manufacturing, machining, assembly, and inspection of dummy parts. They fell into four categories: errors, dimensioning changes, clarifications expressed in notes, and changes associated with the introduction of new part numbers.

Errors consisted of misnumberings, typographical errors, and other mistakes in print.

An example of a dimension change can be seen on the Shoulder Yoke Assembly, drawing 420–3430. For this part, the yoke was widened by 0.003 inches. This minor change provides the proper clearance needed to account for tolerance stack up so that the arm may always be attached to the shoulder without force-fitting.

An example of a clarifying revision is the added set of dimensions placed on sheet 3 of drawing 420–0000, Complete Assembly, HIII–10C. These reference dimensions indicate the location of safety belt plateaus on the dummy's shoulder and pelvis. They are useful when inspecting the dummy in accordance with the instructions provided in the PADI and when conducting the torso flexion qualification test. This additional information does not alter the dummy's design or its construction.

In the TDP proposed in the Part 572 NPRM, many parts were identified with part numbers associated with other ATDs. In the final drawing package we assigned new part numbers to these parts, using the HIII–10C's ''420'' prefix, to identify these as HIII–10C parts. This was strictly a documentation change to better identify HIII–10C parts and did not affect the construction of the dummy in any way. However, it did generate many drawing revisions since many of the newly assigned part numbers are referenced on many HIII–10C drawings.

None of the revisions affect the performance of the HIII–10C in qualification testing or in FMVSS No. 213. Therefore, they are not discussed exhaustively in this document. A full accounting of the revisions can be found in the supplementary technical report cited earlier, ''Revisions to the HIII–10C Technical Data Package,'' NHTSA, August 2011.

2. Organization of Materials

i. Searchable Text

FTSS/Denton and the Alliance recommended that the part numbers be searchable in electronic PDF drawing files. The agency concurs that it would be an improvement for text to be searchable in the electronic PDF drawing files to facilitate use. Accordingly, the agency has converted the drawing files to an electronic format with searchable text capability. A searchable text is now available in the electronic drawing files.

ii. Order of Engineering Drawings

FTSS/Denton and the Alliance recommended that the drawing package be arranged into ascending order by part number. We disagree. We believe that the drawing package should be left in segment order to be able to quickly identify parts belonging to a particular segment cluster. Moreover, the numbering system should be consistent with the PADI to facilitate inspection and service of the dummy. Given that the drawing package is electronically searchable, it will be an easy matter for users to search for drawings and order them in the manner they prefer. Accordingly, the HIII–10C drawing package remains ordered by body segment (as proposed in the Part 572 NPRM).

iii. Part Quantity Specification

The HIII–10C parts list is arranged such that each assembly is listed together with its associated parts. In many instances the same part (such as a fastener) is used on multiple assemblies and is thus listed more than

once on the parts list. The parts list proposed in the Part 572 NPRM only identifies how many times a part is used on the assembly immediately preceding it on the list, not the entire dummy. FTSS/Denton and the Alliance recommend that the parts list should include a column giving the total quantity of that part in the dummy the first time it appears on the list. The agency agrees that such information would be useful for procurement of parts and servicing of the dummy. Accordingly, a column has been added in the parts list showing the total number of times a part appears in the dummy.

iv. Part Numbering Scheme

A number of HIII–10C dummy parts are common with parts of other dummies. For example, the HIII–10C has the same head as the HIII 5th female, but the TDP's for each dummy have their own numbering scheme with different part numbers for the head. FTSS/Denton commented that it believes the same part numbers should be used for identical parts. This comment was echoed by the Alliance.

The agency has not revised our part numbering scheme as recommended by FTSS/Denton. If the same part numbers were used, substantial documentation problems could be encountered. A revision to the design of a shared part may be needed for one dummy, but detrimental to the function of another dummy. A distinct numbering system, by cross-referencing the shared part numbers, poses no such problems.

The main benefits of using identical part numbers are related to part inventory control and sequencing of production processes. For dummy manufacturers like FTSS/Denton, the economics of production may be aided by a numbering scheme that identifies common parts so that batch processing of identical parts could be scheduled readily. However, we believe that interested parties can realize these advantages easily enough by developing their own internal part numbering scheme as they see fit. This may be cross-referenced against the HIII–10C TDP without resorting to a common part numbering scheme for Part 572.

3. Specifications for Soft Parts

The Alliance and FTSS/Denton recommended that the agency and industry work together to define dimensions that are critical to controlling performance of the vinyl, rubber, and other deformable parts and to identify suitable measurement jigs and part tolerances. The Alliance cited the jacket of the 49 CFR part 572 subpart O Hybrid III 5th percentile adult female dummy as an example of unwanted reproducibility variations among dummy manufacturers. FTSS/Denton requested further that the agency work directly with them to set longevity specifications for the useful life of deformable parts. Citing customer dissatisfaction, FTSS/Denton was concerned that vinyl and rubber ATD components typically shrink or change shape over time.

We do not believe it is feasible or practical for NHTSA to undertake the work suggested by the commenters at this time, nor is it necessary for the HIII–10C. The HIII–10C was developed cooperatively under the direction of the SAE Hybrid III Dummy Family Task Force to limit the variability of parts. At the time, FTSS and Denton collaborated jointly on the design. SAE provided the general specifications, and the two manufacturers shared the responsibility of designing the hardware and producing the prototypes. The cooperation assured that variations in reproducibility were avoided.

Even before the companies merged, HIII–10C parts built by FTSS and Denton had a good record of reproducibility and interchangeability, as highlighted in the Part 572 NPRM. Now that the two companies have merged, HIII–10C vinyl and rubber parts can be created from a common set of molds, thus precluding any variability in the form and fit of soft parts. As for longevity, the decision on when to replace worn HIII–10C parts should be based on conformity to part specifications and qualification testing.

4. Use of 3D Computer Renderings

The Part 572 NPRM mentioned that ''three-dimensional engineering aids are available from the NHTSA Web site for complex dummy part dimensions. While these aids are not part of this specification, they can be used by the public for reference purposes.'' These aids take the form of computer-aided design (CAD) files that appear as three-dimensional (3D) renderings of various parts. They were received by NHTSA from the SAE Hybrid III Dummy Family Task Group in 2004 at the time we received the two-dimensional (2D) engineering drawings.[24] The Alliance commented that it believes that the 3D renderings should be formally entered into Part 572 to specify the HIII–10C.

Although we see much merit to 3D renderings, we will not implement the suggestion to enter them into Part 572. We understand that all contemporary ATD designs originate using CAD tools which are valuable assets to designers and researchers. Within NHTSA, CAD files of ATDs have been used in our research activities to construct finite element models to simulate dummies in dynamic events. We have also used them to investigate possible ATD design modifications and to study static interactions with seat belts and vehicle interiors.

However, 3D CAD renderings are not currently used for regulatory purposes in Part 572. As applied within our research activities, a 3D computer rendering is akin to an actual part. But the part alone—without dimensions or any other information—cannot be used to specify itself. Part specifications communicate information on how to fabricate and verify the part. This is done by applying dimensions and tolerances to parts, along with information on material, surface finish, and other features required by the specification-holder. The most objective way to convey this information is to render the part on a standard 2D engineering drawing, showing multiple views of the part when necessary. Drawing standards have long been developed to systematically and unambiguously convey this information, as reflected in Part 572 engineering drawings of ATDs. Thus, the 2D drawings ultimately serve to specify ATD parts.

Neither the Alliance nor FTSS/Denton (the originator of the 3D renderings) has proposed a systematic and unambiguous means by which the 3D renderings may be used to specify ATDs. Until such a means is devised, we will not include them in 49 CFR part 572 to specify the HIII–10C. Our basis for acceptance of the dummy will continue to be conformance to 2D drawings, together with the qualification test requirements in Part 572.

We continue to believe that 3D renderings serve as very helpful engineering aids as described in the NPRM and hold promise in specifying ATD parts. However, in the case of the 3D renderings of the HIII–10C received from the SAE Hybrid III Dummy Family Task Group, the agency will not post the CAD files on our Web site. Upon further review of these renderings, we have found many instances where they do not conform to the 2D specifications shown on drawings. Since we cannot vouch for their accuracy, we decline to post them.

[24] Two sets of 3D renderings were received: one originating from FTSS and the other from Denton before the merger of the two companies into Humanetics.

e. Other

In response to some of the comments, this section clarifies or explains some of the statements in the preamble of the Part 572 NPRM. These clarifications do not affect the regulatory text or TDP specifying the HIII–10C for incorporation into Part 572.

1. Labeling the Dummy as a ''Ten Year Old''

As noted earlier in this preamble, among the ATDs described in 49 CFR part 572, the HIII–10C successfully fills the size gap between the existing HIII–6C and the Hybrid III 5th percentile adult female dummy. The majority of the commenters were supportive of the use of the HIII–10C. However, AAP noted that the height and weight of the HIII–10C do not correspond to an average 10-year-old child as indicated by growth charts published by the Center for Disease Control (CDC). AAP stated that, according to growth charts from 2000, the HIII–10C falls into the 50th–75th percentile in weight, but at 130 centimeters (cm) tall, it is only in the 5th–10th percentile in standing height. AAP believed that these proportions do not represent any average human child and may better represent a nine-year-old child than a ten-year-old. This comment was echoed by Advocates. Although neither organization objected to the use of the dummy in the FMVSS, both apparently believe that the discrepancy in the proportions of the HIII–10C may confuse or mislead the general public on the applicability of booster seats. Thus, both organizations believe the agency should explain how we defined ''ten-year-old'' as it relates to human children and the description of the HIII–10C.

Agency response. The target design for the HIII–10C dummy was an ATD that was suitable for assessing CRSs rated for children weighing about 36.3 kg (80 lb). At 35.4 kg (78 lb), the HIII–10C fulfills this objective. As such, the design intent of the dummy was not to conform rigorously to the anthropometry of a child of a particular age, weight, or height percentile. Furthermore, the sitting height—not the standing height—is of primary importance when evaluating booster seats because the overlay of the seat belt system onto the dummy is depended on its seated posture. As pointed out by AAP, the sitting height of the HIII–10C falls into the same growth chart range for sitting height as it does for weight.

Nevertheless, the agency believes that the proportions of the HIII–10C are more consistent with an average 10-year-old than indicated by AAP's comments. Characteristic dimensions and segment weights of the HIII–10C are based on the anthropometry of the average 10-year-old as identified by Mertz et al.,[25] to which the dummy is shown to match closely.

Moreover, we note that our declared standing height of 130 cm is only an approximation, not a direct measurement. The HIII–10C has no one-to-one correspondence with the heights shown on CDC growth charts. The CDC reference for standing height is one that is taken when subjects are maximally erect. Like all full ATDs in Part 572, the HIII–10C is a sitting dummy. Since it cannot be placed in a standing position, its ''standing height'' cannot be measured directly. Instead, it is approximated by summing the lengths of its body segments. However, since the dummy is constructed to represent a reclined and supported seated posture, not an erect posture, the summed lengths underestimate the CDC standing height. This means that if an actual child with sitting dimensions equal to those of the HIII–10C stood in a maximally erect posture, his/her height would probably be greater than 130 cm.

2. Best Practices for Belt Routing

In citing a 2005 paper by Tylko and Dalmotas,[26] the Alliance observed that the chest deflection of the HIII–10C in the booster seat was higher than it was when it was used without the booster seat. In the non-booster test, the belt was routed close to the neck where that the dummy's central sternal potentiometer was not sensitive to high belt loading. (This insensitivity is common to all ATDs in the Hybrid III family of dummies.) The Alliance has asked the agency to raise awareness of this issue so that the positive effects of booster seats are not mistakenly maligned.

Agency response. As a point of clarification, we note that an injury criterion based on chest deflection is not included in FMVSS No. 213. Further, we also note that the authors of the study make the point that limiting the analysis to chest responses could lead to false conclusions, and that multiple injury metrics should be used, not just chest deflection.

The agency agrees that low chest deflections alone are not always a good indicator of a safe condition. Low deflections often accompany cases of submarining and high knee excursion. Low chest deflections can also occur when the belt migrates laterally off the shoulder so that the thorax is not held back and head excursion is exceedingly high. This exemplifies why multiple injury metrics are usually needed to evaluate a safety system. For FMVSS No. 213, we assess booster seats by evaluating the HIII–10C's chest acceleration, head excursion, and knee excursion concurrently. The agency does not believe that either FMVSS No. 213 or the HIII–10C promotes a poor booster seat design in which the shoulder belt is routed close to the neck. As discussed in this rulemaking, we have found that the HIII–10C dummy adequately distinguishes good vs. bad belt routing in the CRS test environment.

3. Abdominal Injury Correlates

The August 31, 2005 NPRM on FMVSS No. 213 discussed NHTSA's work developing abdominal injury criteria for the HIII–10C, including our work on the ''abdominal injury ratio'' (AIR), which uses impulse calculations from the iliac compressive and lumbar shear forces to identify dummy kinematics associated with submarining. A high AIR value occurs with diminished iliac loads in the presence of high lumbar shear loads. This indicates that the belt may have slipped off the iliac and the dummy may have submarined. Thus, greater AIR values correlate indirectly to abdominal injuries.

In comments to the Part 572 NPRM, Advocates requested that the agency implement AIR until such time as an alternative abdominal injury measure has been established.

Agency response. AIR was not proposed in the FMVSS No. 213 NPRM or SNPRMs due to limited data and is not included in the final rule. We note that AIR is empirical; it is not founded upon the biomechanics of injury. (I.e., reduced iliac loads do not cause abdominal injuries. They only identify instances where a belt may have slipped into the abdomen of the dummy, which may or may not lead to injury.) If the AIR criterion were to be imposed, CRS manufacturers could maximize iliac loads to achieve a good AIR score. We have concerns about criteria that encourage high loads of any sort, as this could potentially increase injury risk in another body region or produce some other unexpected consequence.

For immediate use now, the agency has adopted the use of a correlate to abdominal injuries, i.e., knee excursion. The final rule for FMVSS No. 213 imposes limits on knee excursion and

[25] Mertz HJ, Jarrett K, Moss S, Salloum M, ZhaoY, The Hybrid III 10-Year-Old Dummy, Stapp Car Crash Journal, Vol. 45, November 2001.

[26] Tylko S, Dalmotas D (2005), ''Protection of Rear Seat Occupants in Frontal Crashes,'' Proceedings of the 19th International Technical Conference on the Enhanced Safety of Vehicles Conference, Paper No. 05–258.

head excursion for the HIII–10C. The limit on knee excursion prevents restraint manufacturers from controlling head excursion by designing their restraints so that children submarine excessively during a crash. The agency has observed a strong correlation between knee excursion and submarining in the child dummies.[27] Ultimately, a direct biomechanically-based measure of abdominal deformation provides the best means to assess abdominal injuries. Our research plan for the HIII–10C includes developing a pelvis and abdominal modification that will provide such a measurement.

4. Repeatability in Systems Testing

In the Part 572 NPRM, the agency reported on a series of repeatability tests using a dynamic sled. The tests were carried out using a specialized booster seat designed for repeated use. Dorel commented that they cannot follow this protocol when certifying its own seats. Dorel also commented that our repeatability tests seemed to assure a best-case outcome in terms of dummy injury metrics.

Agency response. Dorel may have misconstrued our reporting of these tests as a mandate for additional procedures necessary to qualify the HIII–10C and certify booster seats. This was not our intent. The series of tests were not directly applicable to compliance testing of booster seats. The purpose of the sled tests was to evaluate the repeatability and durability of the HIII–10C dummy kinematics in a pulse approaching FMVSS No. 213 severity. The tests were not to create a best-case scenario for injury reference values. We chose to use a rigid bench seat in conjunction with a limited number of CRS models to minimize the effects of set-up related variables which otherwise could interfere with the assessment of the dummy's own true consistency.

f. Dummy Development Efforts

1. Hybrid III Child Dummy Revisions—Abdomen and Pelvis

Citing the significance of abdominal injuries in children and the lack of instrumentation in the HIII–10C, both CHOP and Advocates urged the agency to redouble our efforts to come up with an appropriate means to assess abdominal injuries with the dummy. Dorel, AAP, and UMTRI also commented on importance of assessing abdominal injuries.

Since the NPRMs of 2005, NHTSA has been actively involved in two principal research efforts aimed at improving abdominal injury assessment in Hybrid III child ATDs. The two efforts focus on the development of a biofidelic, instrumented abdomen along with an appropriately proportioned pelvis.

One effort involves a concept for a fluid-filled abdomen that was reported in 2001.[28] Since then, it has been developed into a silicone shell filled with silicone gel with instrumentation to measure deformation. The shell takes the form of an insert that fills the abdominal cavity of the HIII–6C. The abdominal insert has proven to be reasonably biofidelic when compared with the response of an age-matched animal surrogate.[29] The other effort involves the modification of a standard HIII–6C pelvis to more closely reflect child anthropometry based on data collected by UMTRI on child participants.[30]

NHTSA has also begun work with an SAE working group devoted to integrating abdomen and pelvis technology into the HIII–6C (the SAE dummy abdomen pelvis round robin (DAPRR) working group (August 2008)). In DAPRR, NHTSA is facilitating the development of prototype pelves using UMTRI design criteria [31] to develop a biofidelic retrofit package suitable for assessing pediatric abdominal injuries. Round-robin testing of the prototypes is planned for 2012. The HIII–6C is the primary target of the developing modifications given the greater use rates of six-year-olds vs. ten-year-olds in child restraint systems regulated by FMVSS No. 213. The new pelvis and abdomen designs could possibly be transitioned to the ten-year-old size through dimensional scaling and considerations for biomechanical response differences.

2. Pediatric Research

CHOP, AAP, and Advocates have asked the agency to intensify our research efforts in child biomechanics in general. Many noted that current pediatric crash test dummies have been developed based on biofidelity requirements that were scaled from adult response data.

Since the NPRMs of 2005, the agency has been engaged in several activities aimed at new child specific biofidelity requirements for use in the development of new frontal impact child dummies. These are summarized below and discussed more fully in NHTSA's Biomechanics Research Plan, 2011–2015.[32]

Child anthropometry. In order to properly assess a child's interaction with a booster seat and belt system, we are building a child anthropometry database by collecting whole-body laser scans of 3-, 6- and 10-year-old age ranges in automotive seating positions.

Biomechanical response. We have several projects focused on getting response data that is unique to the pediatric human and not scaled from adult data. For example, to better understand the deformation characteristics of a pediatric thorax, we are collecting force versus deflection data during cardiopulmonary resuscitation of pediatric hospital patients. Additionally, we are collecting data from sled tests of pediatric age-matched surrogates that are being used to quantify thoracic response and spinal kinematics.

Biomechanics of injury. We are studying the relationship between local brain tissue strain and axonal injury in a prepubescent human. This has potential to be used for the basis of new brain injury criteria for children.

Child dummy development. The agency has begun assessing current child ATDs (including those in the Hybrid III family as well as the Q-series) against new pediatric response data. Our first consideration is the need for developing an all-new 6-year-old ATD versus enhancement of the existing HIII–6C. Thereafter, we will consider the need for an advanced 10-year-old ATD.

3. Status of HIC

Advocates have asked the agency to work expeditiously to reinstate a head injury criterion for the HIII–10C.

The agency is committed to resolving the problem that led to our decision to omit HIC as a criterion in FMVSS No.

[27] Klinich, K., Reed, M., Orton, N., Manary, M., Rupp, J., ''Optimizing Protection for Rear Seat Occupants: Assessing Booster Performance with Realistic Belt Geometry Using the Hybrid III 6YO ATD,'' UMTRI Report, University of Michigan, Ann Arbor, MI, March 2011.

[28] Rouhana et al. (2001), ''Development of a Reusable, Rate-sensitive Abdomen for the Hybrid III Family of Dummies,'' Stapp Car Crash Journal, V45.

[29] Kent R, Stacey S, Kindig M, Forman J, Woods W (2006), ''Biomechanical Response of the Pediatric Abdomen, Part 1: Development of an Experimental Model and Quantification of Structural Response to Dynamic Belt Loading,'' Stapp Car Crash Journal, V50, 2006–22–0001.

[30] Klinich, K et al. (2010), ''Development and Testing of a More Realistic Pelvis for the Hybrid III 6-Year-Old ATD,'' Traffic Injury Prevention, 11:606–612.

[31] Reed MP, Sochor MM, Rupp JD, Klinich KD, Manary MA (2009), ''Anthropometric Specification of Child Crash Dummy Pelves through Statistical Analysis of Skeletal Geometry,'' Journal of Biomechanics, V42: 1143–1145.

[32] NHTSA's Biomechanics Research Plan, 2011–2015, Report No. DOT HS 811 474, U.S. Department of Transportation, Washington DC, June 2011.

213 when testing with the HIII–10C. The problem, explained earlier, stems from ATD whole-body motions that induce a hard chin-to-chest contact, not HIC itself. We are working to improve the ATD's chin and sternum designs to mitigate this effect. As described under the heading of child biomechanics within the NHTSA Biomechanics Research Plan,[33] we are also working to attain a better understanding of pediatric body motions in order to engineer a biofidelic head response into an ATD. This includes efforts to characterize the flexibility of an adolescent thoracic spine and its effect on head excursion and upper neck loads. Furthermore, research is underway to better understand the interaction between the shoulder belt and clavicle and its effect on head motion. We are also examining the extent to which chin-to-chest contacts actually occur to children in booster seats in order to model the interaction correctly with a child ATD.

V. Rulemaking Analyses and Notices

Executive Order (E.O.) 12866, E.O. 13563 and DOT Regulatory Policies and Procedures

This rulemaking action has considered the impact of this regulatory action under E.O. 12866 and E.O.13563 and the Department of Transportation's (DOT) regulatory policies and procedures. This rulemaking action was not reviewed by the Office of Management and Budget under E.O. 12866. The rulemaking has also been determined not to be significant under DOT's regulatory policies and procedures (44 FR 11034, February 26, 1979).

There are benefits associated with this rulemaking but they cannot be quantified. The incorporation of the test dummy into 49 CFR part 572 will permit NHTSA to use the ATD in FMVSS No. 213 compliance testing of CRSs for children weighing over 65 lb. In addition, the availability of this dummy in a regulated format will benefit safety by providing a more suitable, stabilized, and objective test tool to the safety community for use in research and development of child passenger safety products.

Based on our dummy purchase contract with FTSS/Denton, the estimated cost of an uninstrumented HIII–10C dummy is approximately $35,000. Instruments necessary to qualify the dummy in accordance with Part 572 include 3 accelerometers for the head (about $500 apiece) and an upper neck load cell (about $10,000). The central sternal potentiometer, needed for the thorax qualification procedure, is included in the base cost of the dummy. For compliance testing, only three accelerometers are needed; they are located at the CG of the thorax rather than the head. All sensors required in compliance and certification procedures are common with other 49 CFR part 572 dummies, so the cost of those instruments may be defrayed to some extent for those who already own them. If the dummy is outfitted with all instrumentation up to its full capability, the total instrumentation cost is about $65,000 in addition to the cost of the dummy.

This document amends 49 CFR part 572 by adding design and performance specifications for a test dummy representative of a ten-year-old child that the agency will use in compliance tests of the Federal child restraint system safety standard, and may use for research purposes. This Part 572 rule does not impose any requirements on anyone. Businesses are affected only if they choose to manufacture or test with the dummy. Because the economic impacts of this final rule are minimal, no further regulatory evaluation is necessary.

Regulatory Flexibility Act

Pursuant to the Regulatory Flexibility Act (5 U.S.C. 601 et seq., as amended by the Small Business Regulatory Enforcement Fairness Act (SBREFA) of 1996), whenever an agency is required to publish a proposed or final rule, it must prepare and make available for public comment a regulatory flexibility analysis that describes the effect of the rule on small entities (i.e., small businesses, small organizations, and small governmental jurisdictions), unless the head of the agency certifies the rule will not have a significant economic impact on a substantial number of small entities. The Small Business Administration's regulations at 13 CFR part 121 define a small business, in part, as a business entity ''which operates primarily within the United States.'' (13 CFR 121.105(a)).

We have considered the effects of this rulemaking under the Regulatory Flexibility Act. I hereby certify that this rulemaking action will not have a significant economic impact on a substantial number of small entities. This action will not have a significant economic impact on a substantial number of small entities because the addition of the test dummy to Part 572 does not impose any requirements on anyone. NHTSA will not require anyone to manufacture the dummy or to test motor vehicles or motor vehicle equipment with it.

National Environmental Policy Act

NHTSA has analyzed this final rule for the purposes of the National Environmental Policy Act and determined that it will not have any significant impact on the quality of the human environment.

Executive Order 13045 and 12132 (Federalism)

Executive Order 13045 (62 FR 19885, April 23, 1997) applies to any rule that: (1) is determined to be ''economically significant'' as defined under E.O. 12866, and (2) concerns an environmental, health, or safety risk that NHTSA has reason to believe may have a disproportionate effect on children. If the regulatory action meets both criteria, we must evaluate the environmental health or safety effects of the planned rule on children, and explain why the planned regulation is preferable to other potentially effective and reasonably feasible alternatives considered by us.

This final rule is not subject to the Executive Order because it is not economically significant as defined in E.O. 12866.

NHTSA has examined this final rule pursuant to Executive Order 13132 (64 FR 43255, August 10, 1999) and concluded that no additional consultation with States, local governments or their representatives is mandated beyond the rulemaking process. The agency has concluded that the final rule does not have federalism implications because the rule does not have ''substantial direct effects on the States, on the relationship between the national government and the States, or on the distribution of power and responsibilities among the various levels of government.'' This rule will not impose any requirements on anyone. Businesses will be affected only if they choose to manufacture or test with the dummy.

Further, no consultation is needed to discuss the preemptive effect of this final rule. NHTSA's safety standards can have preemptive effect in two ways. This final rule amends 49 CFR part 572 and is not a safety standard.[34] This Part

[33] NHTSA's Biomechanics Research Plan, 2011–2015, Report No. DOT HS 811 474, U.S. Department of Transportation, Washington DC, June 2011, pp. 6–10.

[34] With respect to the safety standards, the National Traffic and Motor Vehicle Safety Act contains an express preemptive provision: ''When a motor vehicle safety standard is in effect under this chapter, a State or a political subdivision of a State may prescribe or continue in effect a standard applicable to the same aspect of performance of a motor vehicle or motor vehicle equipment only if the standard is identical to the standard prescribed

Continued

572 final rule does not impose any requirements on anyone.

Civil Justice Reform

With respect to the review of the promulgation of a new regulation, section 3(b) of Executive Order 12988, ''Civil Justice Reform'' (61 FR 4729, February 7, 1996) requires that Executive agencies make every reasonable effort to ensure that the regulation: (1) Clearly specifies the preemptive effect; (2) clearly specifies the effect on existing Federal law or regulation; (3) provides a clear legal standard for affected conduct, while promoting simplification and burden reduction; (4) clearly specifies the retroactive effect, if any; (5) adequately defines key terms; and (6) addresses other important issues affecting clarity and general draftsmanship under any guidelines issued by the Attorney General. This document is consistent with that requirement.

Pursuant to this Order, NHTSA notes as follows.

The issue of preemption is discussed above in connection with E.O. 13132. NHTSA notes further that there is no requirement that individuals submit a petition for reconsideration or pursue other administrative proceeding before they may file suit in court.

Paperwork Reduction Act

Under the Paperwork Reduction Act of 1995, a person is not required to respond to a collection of information by a Federal agency unless the collection displays a valid control number from the Office of Management and Budget (OMB). This rule will not have any requirements that are considered to be information collection requirements as defined by the OMB in 5 CFR part 1320.

National Technology Transfer and Advancement Act

Section 12(d) of the National Technology Transfer and Advancement Act of 1995 (NTTAA), Public Law 104–113, section 12(d) (15 U.S.C. 272) directs NHTSA to use voluntary consensus standards in its regulatory activities unless doing so would be inconsistent with applicable law or otherwise impractical. Voluntary consensus standards are technical standards (e.g., materials specifications, test methods, sampling procedures, and business practices) that are developed or adopted by voluntary consensus standards bodies. The NTTAA directs NHTSA to provide Congress, through OMB, explanations when the agency decides not to use available and applicable voluntary consensus standards.

The test dummy and qualification requirements are based on the work of the SAE Hybrid III Dummy Family Task Group (DFTG). Differences between the DFTG recommendations and this final rule are minor and are based on additional research performed by the agency and on comments to the NPRM.

The following voluntary consensus standards have been used in developing the HIII–10C dummy:

- SAE Recommended Practice J211, Rev. Mar 95, ''Instrumentation for Impact Tests—Part 1—Electronic Instrumentation''; and,
- SAE J1733 of 1994–12 ''Sign Convention for Vehicle Crash Testing.''

Unfunded Mandates Reform Act

Section 202 of the Unfunded Mandates Reform Act of 1995 (UMRA), Public Law 104–4, requires Federal agencies to prepare a written assessment of the costs, benefits, and other effects of proposed or final rules that include a Federal mandate likely to result in the expenditure by State, local, or tribal governments, in the aggregate, or by the private sector, of more than $100 million annually (adjusted for inflation with base year of 1995). Before promulgating a NHTSA rule for which a written statement is needed, section 205 of the UMRA generally requires the agency to identify and consider a reasonable number of regulatory alternatives and adopt the least costly, most cost-effective, or least burdensome alternative that achieves the objectives of the rule.

This final rule does not impose any unfunded mandates under the UMRA. This rule does not meet the definition of a Federal mandate because it does not impose requirements on anyone. It amends 49 CFR part 572 by adding design and performance specifications for a 10-year-old test dummy that the agency will use in FMVSS No. 213 and for research purposes. This final rule affects only those businesses that choose to manufacture or test with the dummy. It would not result in costs of $100 million or more to either State, local, or tribal governments, in the aggregate, or to the private sector.

Plain Language

Executive Order 12866 requires each agency to write all rules in plain language. Application of the principles of plain language includes consideration of the following questions:

—Has the agency organized the material to suit the public's needs?
—Are the requirements in the rule clearly stated?
—Does the rule contain technical language or jargon that is not clear?
—Would a different format (grouping and order of sections, use of headings, paragraphing) make the rule easier to understand?
—Would more (but shorter) sections be better?
—Could the agency improve clarity by adding tables, lists, or diagrams?
—What else could the agency do to make this rulemaking easier to understand?

If you have any responses to these questions, please send them to NHTSA.

Regulation Identifier Number

The Department of Transportation assigns a regulation identifier number (RIN) to each regulatory action listed in the Unified Agenda of Federal Regulations. The Regulatory Information Service Center publishes the Unified Agenda in April and October of each year. You may use the RIN contained in the heading at the beginning of this document to find this action in the Unified Agenda.

Petitions for Reconsideration of This Rule

The petition will be placed in the docket. Anyone is able to search the electronic form of all documents received into any of our dockets by the name of the individual submitting the comment (or signing the comment, if submitted on behalf of an association, business, labor union, etc.). You may review DOT's complete Privacy Act Statement in the **Federal Register** published on April 11, 2000 (Volume 65, Number 70; Pages 19477–78).

List of Subjects in 49 CFR Part 572

Motor vehicle safety, Incorporation by reference.

In consideration of the foregoing, NHTSA amends 49 CFR Part 572 as follows:

PART 572—ANTHROPOMORPHIC TEST DUMMIES

■ 1. The authority citation for Part 572 continues to read as follows:

Authority: 49 U.S.C. 322, 30111, 30115, 30117 and 30166; delegation of authority at 49 CFR 1.50.

---

under this chapter.'' 49 U.S.C. 30103(b)(1). Second, the Supreme Court has recognized the possibility of implied preemption: State requirements imposed on motor vehicle manufacturers, including sanctions imposed by State tort law, can stand as an obstacle to the accomplishment and execution of a NHTSA safety standard. When such a conflict exists, the Supremacy Clause of the Constitution makes the State requirements unenforceable. *See Geier* v. *American Honda Motor Co.,* 529 U.S. 861 (2000).

■ 2. 49 CFR Part 572 is amended by adding a new Subpart T consisting of 572.170—572.177 to read as follows:

Subpart T—Hybrid III 10-Year-Old Child Test Dummy (HIII–10C)

Sec.
572.170 Incorporation by reference.
572.171 General description.
572.172 Head assembly and test procedure.
572.173 Neck assembly and test procedure.
572.174 Thorax assembly and test procedure.
572.175 Upper and lower torso assemblies and torso flexion test procedure.
572.176 Knees and knee impact test procedure.
572.177 Test conditions and instrumentation.
Appendix—Figures to Subpart T of Part 572

§ 572.170 Incorporation by reference.

(a) Certain material is incorporated by reference (IBR) into this part with the approval of the Director of the Federal Register under 5 U.S.C. 552(a) and 1 CFR part 51. To enforce any edition other than that specified in this section, NHTSA must publish notice of change in the **Federal Register** and the material must be available to the public. All approved material is available for inspection at the Department of Transportation, Docket Operations, Room W12–140, telephone 202–366–9826, and is available from the sources listed below. The material is available in electronic format through Regulations.gov, call 1–877–378–5457 or go to *www.regulations.gov*. It is also available for inspection at the National Archives and Records Administration (NARA). For information on the availability of this material at NARA, call 202–741–6030 or go to *http://www.archives.gov/federal-register/cfr/ibr-locations.html.*

(b) NHTSA Technical Information Services, 1200 New Jersey Ave., SE., Washington, DC 20590, telephone 202–366–5965.

(1) A parts/drawing list entitled, ''Parts/Drawing List, Part 572 Subpart T, Hybrid III 10-Year-Old Child Test Dummy (HIII–10C), August 2011,'' IBR approved for § 572.171.

(2) A drawings and inspection package entitled, ''Parts List and Drawings, Part 572 Subpart T, Hybrid III 10-Year-Old Child Test Dummy (HIII–10C), August 2011,'' IBR approved for § 572.171, including:

(i) Drawing No. 420–0000, Complete Assembly HIII 10-year-old, IBR approved for §§ 572.171, 572.172, 572.173, 572.174, 572.176, and 572.177.

(ii) Drawing No. 420–1000, Head Assembly, IBR approved for § 572.171, § 572.172, § 572.173, and § 572.177.

(iii) Drawing No. 420–2000, Neck Assembly, IBR approved for §§ 572.171, 572.173, and 572.177.

(iv) Drawing No. 420–3000, Upper Torso Assembly, IBR approved for §§ 572.171, 572.174, 572.175, and 572.177.

(v) Drawing No. 420–4000, Lower Torso Assembly, IBR approved for §§ 572.171, 572.174, 572.175, and 572.177.

(vi) Drawing No. 420–5000–1, Complete Leg Assembly—left, IBR approved for §§ 572.171, 572.176, and 572.177.

(vii) Drawing No. 420–5000–2, Complete Leg Assembly—right, IBR approved for §§ 572.171, 572.176, and 572.177.

(viii) Drawing No. 420–7000–1, Complete Arm Assembly—left, IBR approved for § 572.171, and,

(ix) Drawing No. 420–7000–2, Complete Arm Assembly—right, IBR approved for § 572.171.

(3) A procedures manual entitled ''Procedures for Assembly, Disassembly and Inspection (PADI) of the Hybrid III 10-Year-Old Child Test Dummy (HIII–10C), August 2011''; IBR approved for §§ 572.171 and 572.177.

(c) SAE International, 400 Commonwealth Drive, Warrendale, PA 15096, call 1–877–606–7323.

(1) SAE Recommended Practice J211/1, Rev. Mar 95, ''Instrumentation for Impact Tests—Part 1—Electronic Instrumentation,'' IBR approved for § 572.177.

(2) SAE Information Report J1733 of 1994–12, ''Sign Convention for Vehicle Crash Testing,'' December 1994, IBR approved for § 572.177.

§ 572.171 General description.

(a) The Hybrid III 10-year-old Child Test Dummy (HIII–10C) is defined by drawings and specifications containing the following materials:

(1) The parts enlisted in ''Parts/Drawing List, Part 572 Subpart T, Hybrid III 10-Year-Old Child Test Dummy (HIII–10C), August 2011'' (incorporated by reference, see § 572.170),

(2) The engineering drawings and specifications contained in ''Parts List and Drawings, Part 572 Subpart T, Hybrid III 10-Year-Old Child Test Dummy (HIII–10C), August 2011,'' which includes the engineering drawings and specifications described in Drawing 420–0000, the titles of the assemblies of which are listed in Table A, and,

(3) A manual entitled ''Procedures for Assembly, Disassembly and Inspection (PADI) of the Hybrid III 10-Year-Old Child Test Dummy (HIII–10C), August 2011.''

TABLE A

Component assembly	Drawing No.
(i) Head Assembly	420–1000
(ii) Neck Assembly	420–2000
(iii) Upper Torso Assembly	420–3000
(iv) Lower Torso Assembly	420–4000
(v) Complete Leg Assembly—left	420–5000–1
(vi) Complete Leg Assembly—right	420–5000–2
(vii) Complete Arm Assembly—left	420–7000–1
(viii) Complete Arm Assembly—right	420–7000–2

(b) The structural properties of the dummy are such that the dummy conforms to this Subpart in every respect before use in any test.

§ 572.172 Head assembly and test procedure.

(a) The head assembly for this test consists of the complete head (drawing 420–1000), a six-axis neck transducer (drawing SA572–S11, included in drawing 420–0000), or its structural replacement (drawing 420–383X), and 3 accelerometers (drawing SA572–S4, included in drawing 420–0000) (all incorporated by reference, see § 572.170).

(b) When the head assembly is dropped from a height of 376.0 ± 1.0 mm (14.8 ± 0.04 in) in accordance with paragraph (c) of this section, the peak

resultant acceleration at the location of the accelerometers at the head CG may not be less than 250 G or more than 300 G. The resultant acceleration vs. time history curve shall be unimodal; oscillations occurring after the main pulse must be less than 10 percent of the peak resultant acceleration. The lateral acceleration shall not exceed 15 G (zero to peak).

(c) Head test procedure. The test procedure for the head is as follows:

(1) Soak the head assembly in a controlled environment at any temperature between 18.9 and 25.6 °C (66 and 78 °F) and a relative humidity from 10 to 70 percent for at least four hours prior to a test.

(2) Prior to the test, clean the impact surface of the skin and the impact plate surface with isopropyl alcohol, trichloroethane, or an equivalent. The skin of the head must be clean and dry for testing.

(3) Suspend and orient the head assembly as shown in Figure T1. The lowest point on the forehead must be 376.0 ± 1.0 mm (14.8 ± 0.04 in) from the impact surface. The 1.57 mm (0.062 in) diameter holes located on either side of the dummy's head shall be used to ensure that the head is level with respect to the impact surface.

(4) Drop the head assembly from the specified height by means that ensure a smooth, instant release onto a rigidly supported flat horizontal steel plate which is 50.8 mm (2 in) thick and 610 mm (24 in) square. The impact surface shall be clean, dry and have a micro finish of not less than 203.2×10^{-6} mm (8 micro inches) (RMS) and not more than 2032.0×10^{-6} mm (80 micro inches) (RMS).

(5) Allow at least 2 hours between successive tests on the same head.

§ 572.173 Neck assembly and test procedure.

(a) The neck assembly for the purposes of this test consists of the assembly of components shown in drawing 420–2000 (incorporated by reference, see § 572.170).

(b) When the head-neck assembly consisting of the head (drawing 420–1000), neck (drawing 420–2000), six-channel neck transducer (SA572–S11, included in drawing 420–0000), lower neck bracket assembly (drawing 420–2070), and either three uniaxial accelerometers (drawing SA572–S4, included in drawing 420–0000) or their mass equivalent installed in the head assembly as specified in drawing 420–1000 (all incorporated by reference, see § 572.170), is tested according to the test procedure in paragraph (c) of this section, it shall have the following characteristics:

(1) *Flexion.* (i) Plane D, referenced in Figure T2, shall rotate in the direction of preimpact flight with respect to the pendulum's longitudinal centerline between 76 degrees and 90 degrees. During the time interval while the rotation is within the specified corridor, the peak moment, measured by the neck transducer (drawing SA572–S11, included in drawing 420–0000) (incorporated by reference, see § 572.170), about the occipital condyles may not be less than 50 N-m (36.9 ft-lbf) and not more than 62 N-m (45.7 ft-lbf). The positive moment shall decay for the first time to 10 N-m (7.4 ft-lbf) between 86 ms and 105 ms after time zero.

(ii) The moment shall be calculated by the following formula: Moment (N-m) = $M_y - (0.01778) \times (F_x)$.

(iii) M_y is the moment about the y-axis in Newton-meters, F_x is the shear force measured by the neck transducer (drawing SA572–S11) in Newtons, and 0.01778 is the distance in meters from the load center of the neck transducer to the occipital condyle.

(2) *Extension.* (i) Plane D, referenced in Figure T3, shall rotate in the direction of preimpact flight with respect to the pendulum's longitudinal centerline between 96 degrees and 115 degrees. During the time interval while the rotation is within the specified corridor, the peak moment, measured by the neck transducer (drawing SA572–S11, included in drawing 420–0000) (incorporated by reference, see § 572.170), about the occipital condyles may not be more than −37 N-m (−27.3 ft-lbf) and not less than −46 N-m (−33.9 ft-lbf). The positive moment shall decay for the first time to −10 N-m (−7.4 ft-lbf) between 100 ms and 116 ms after time zero.

(ii) The moment shall be calculated by the following formula: Moment (N-m) = $M_y - (0.01778) \times (F_x)$.

(iii) M_y is the moment about the y-axis in Newton-meters, F_x is the shear force measured by the neck transducer (drawing SA572–S11, included in drawing 420–0000) (incorporated by reference, see § 572.170) in Newtons, and 0.01778 is the distance in meters from the load center of the neck transducer to the occipital condyle.

(3) Time zero is defined as the time of initial contact between the pendulum striker plate and the honeycomb material. All data channels shall be at the zero level at this time.

(c) *Test procedure.* The test procedure for the neck assembly is as follows:

(1) Soak the neck assembly in a controlled environment at any temperature between 20.6 and 22.2 °C (69 and 72 °F) and a relative humidity between 10 and 70 percent for at least four hours prior to a test.

(2) Torque the hex nut (drawing 420–2000, part 9000130) on the neck cable (drawing 420–2060) (both incorporated by reference, see § 572.170) to 0.9 ± 0.2 N-m (8 ± 2 in-lbf) before each test on the same neck.

(3) Mount the head-neck assembly, defined in paragraph (b) of this section, on the pendulum described in Figure 22 of 49 CFR part 572 so that the leading edge of the lower neck bracket coincides with the leading edge of the pendulum as shown in Figure T2 for flexion tests and Figure T3 for extension tests.

(4)(i) Release the pendulum and allow it to fall freely from a height to achieve an impact velocity of 6.1 ± 0.12 m/s (20.0 ± 0.4 ft/s) for flexion tests and 5.03 ± 0.12 m/s (16.50 ± 0.40 ft/s) for extension tests, measured by an accelerometer mounted on the pendulum as shown in Figure T2 at the instant of contact with the honeycomb.

(ii) Stop the pendulum from the initial velocity with an acceleration vs. time pulse that meets the velocity change as specified below. Integrate the pendulum acceleration data channel to obtain the velocity vs. time curve:

TABLE B—PENDULUM PULSE

Time (ms)	Flexion		Extension	
	M/s	ft/s	m/s	ft/s
10	1.64–2.04	5.38–6.69	1.49–1.89	4.89–6.20
20	3.04–4.04	9.97–13.25	2.88–3.68	9.45–12.07
30	4.45–5.65	14.60–18.53	4.20–5.20	13.78–17.06

§ 572.174 Thorax assembly and test procedure.

(a) The thorax consists of the part of the torso assembly designated as the upper torso (drawing 420–3000) (incorporated by reference, see § 572.170).

(b) When the anterior surface of the thorax of a completely assembled dummy (drawing 420–0000) (incorporated by reference, see § 572.170) is impacted by a test probe conforming to section 572.177 at 6.00 ± 0.12 m/s (22.0 ± 0.4 ft/s) according to the test procedure in paragraph (c) of this section:

(1) Maximum sternum displacement (compression) relative to the spine, measured with chest deflection transducer (drawing SA572–T4, included in drawing 420–0000) (incorporated by reference, see § 572.170), must be not less than 37 mm (1.46 in) and not more than 46 mm (1.81 in). Within this specified compression corridor, the peak force, measured by the impact probe as defined in section 572.177 and calculated in accordance with paragraph (b)(3) of this section, shall not be less than 2.0 kN (450 lbf) and not more than 2.45 kN (551 lbf). The peak force after 20 mm (0.79 in.) of sternum displacement but before reaching the minimum required 37 mm (1.46 in.) sternum displacement limit shall not exceed 2.52 kN (567 lbf).

(2) The internal hysteresis of the ribcage in each impact as determined by the plot of force vs. deflection in paragraph (a)(1) of this section shall be not less than 69 percent but not more than 85 percent. The hysteresis shall be calculated by determining the ratio of the area between the loading (from time zero to maximum deflection) and unloading portions (from maximum deflection to zero force) of the force deflection curve to the area under the loading portion of the curve.

(3) The force shall be calculated by the product of the impactor mass and its measured deceleration.

(c) *Test Procedure.* The test procedure for the thorax assembly is as follows:

(1) The dummy is clothed in a form fitting cotton stretch above-the-elbow sleeved shirt and above-the-knees pants. The weight of the shirt and pants shall not exceed 0.14 kg (0.30 lb) each.

(2) Torque the lumbar cable (drawing 420–4130) (incorporated by reference, see § 572.170) to 0.9 ± 0.2 N-m (8 ± 2 in-lbf) and set the lumbar adjustment angle to 12 degrees. Set the neck angle to 16 degrees.

(3) Soak the dummy in a controlled environment at any temperature between 20.6 and 22.2 °C (69 and 72 °F) and a relative humidity between 10 and 70 percent for at least four hours prior to a test.

(4) Seat and orient the dummy on a seating surface without back support as shown in Figure T4, with the limbs extended horizontally and forward, parallel to the midsagittal plane, the midsagittal plane vertical within ± 1 degree and the ribs level in the anterior-posterior and lateral directions within ± 0.5 degrees.

(5) Establish the impact point at the chest midsagittal plane so that the impact point of the longitudinal centerline of the probe coincides with the midsagittal plane of the dummy within ± 2.5 mm (0.1 in) and is 12.7 ± 1.1 mm (0.5 ± 0.04 in) below the horizontal-peripheral centerline of the No. 3 rib and is within 0.5 degrees of a horizontal line in the dummy's midsagittal plane.

(6) Impact the thorax with the test probe so that at the moment of contact the probe's longitudinal centerline falls within 2 degrees of a horizontal line in the dummy's midsagittal plane.

(7) Guide the test probe during impact so that there is no significant lateral, vertical, or rotational movement.

(8) No suspension hardware, suspension cables, or any other attachments to the probe, including the velocity vane, shall make contact with the dummy during the test.

§ 572.175 Upper and lower torso assemblies and torso flexion test procedure.

(a) The test objective is to determine the stiffness of the molded lumbar assembly (drawing 420–4100), abdominal insert (drawing 420–4300), and chest flesh assembly (drawing 420–3560) on resistance to articulation between the upper torso assembly (drawing 420–3000) and lower torso assembly (drawing 420–4000) (all incorporated by reference, see § 572.170).

(b) When the upper torso assembly of a seated dummy is subjected to a force continuously applied at the head to neck pivot pin level through a rigidly attached adaptor bracket as shown in Figure T5 according to the test procedure set out in paragraph (c) of this section:

(1) The lumbar spine-abdomen-chest flesh assembly shall flex by an amount that permits the upper torso assembly to translate in angular motion relative to the vertical transverse plane 35 ± 0.5 degrees at which time the force applied must be not less than 180 N (40.5 lbf) and not more than 250 N (56.2 lbf).

(2) Upon removal of the force, the torso assembly must return to within 8 degrees of its initial position.

(c) *Test Procedure.* The test procedure for the upper/lower torso assembly is as follows:

(1) Torque the lumbar cable (drawing 420–4130) (incorporated by reference, see § 572.170) to 0.9 ± 0.2 N-m (8 ± 2 in-lbf) and set the lumbar adjustment angle to 12 degrees. Set the neck angle to 16 degrees.

(2) Soak the dummy in a controlled environment at any temperature between 20.6 and 22.2 °C (69 and 72 °F) and a relative humidity between 10 and 70 percent for at least four hours prior to a test.

(3) Assemble the complete dummy (with or without the legs below the femurs) and attach to the fixture in a seated posture as shown in Figure T5.

(4) Secure the pelvis to the fixture at the pelvis instrument cavity rear face by threading four ¼-inch cap screws into the available threaded attachment holes. Tighten the mountings so that the test material is rigidly affixed to the test fixture and the pelvic-lumbar joining surface is 18 degrees from horizontal and the legs are parallel with the test fixture.

(5) Attach the loading adaptor bracket to the spine of the dummy as shown in Figure T5.

(6) Inspect and adjust, if necessary, the seating of the abdominal insert within the pelvis cavity and with respect to the chest flesh, assuring that the chest flesh provides uniform fit and overlap with respect to the outside surface of the pelvis flesh.

(7) Flex the dummy's upper torso three times between the vertical and until the torso reference frame, as shown in Figure T5, reaches 30 degrees from the vertical transverse plane. Bring the torso to vertical orientation and wait for 30 minutes before conducting the test. During the 30-minute waiting period, the dummy's upper torso shall be externally supported at or near its vertical orientation to prevent it from drooping.

(8) Remove all external support and wait two minutes. Measure the initial orientation angle of the torso reference plane of the seated, unsupported dummy as shown in Figure T5. The initial orientation angle may not exceed 20 degrees.

(9) Attach the pull cable and the load cell as shown in Figure T5.

(10) Apply a tension force in the midsagittal plane to the pull cable as shown in Figure T5 at any upper torso deflection rate between 0.5 and 1.5 degrees per second, until the angle reference plane is at 35 ± 0.5 degrees of flexion relative to the vertical transverse plane.

(11) Continue to apply a force sufficient to maintain 35 ± 0.5 degrees of flexion for
10 seconds, and record the highest applied force during the 10-second period.

(12) Release all force at the attachment bracket as rapidly as possible, and measure the return angle with respect to the initial angle reference plane as defined in paragraph (c)(7) of this section three minutes after the release.

§ 572.176 Knees and knee impact test procedure.

(a) The knee assembly for the purpose of this test is the part of the leg assembly shown in drawing 420–5000 (incorporated by reference, see § 572.170).

(b) When the knee assembly, consisting of lower upper leg assembly (420–5200), femur load transducer (SA572–S10, included in drawing 420–0000) or its structural replacement (420–5121), lower leg assembly (420–5300), ankle assembly (420–5400), and foot molded assembly (420–5500) (all incorporated by reference, see § 572.170) is tested according to the test procedure in subsection (c) of this section:

(1) The peak resistance force as measured with the test probe-mounted accelerometer must not be less than 2.6 kN (585 lbf) and not more than 3.2 kN (719 lbf).

(2) The force shall be calculated by the product of the impactor mass and its deceleration.

(c) *Test Procedure.* The test procedure for the knee assembly is as follows:

(1) Soak the knee assembly in a controlled environment at any temperature between 20.6 and 22.2 °C (69 and 72 °F) and a relative humidity between 10 and 70 percent for at least four hours prior to a test.

(2) Mount the test material and secure it to a rigid test fixture as shown in Figure T6. No part of the foot or tibia may contact any exterior surface.

(3) Align the test probe so that throughout its stroke and at contact with the knee it is within 2 degrees of horizontal and collinear with the longitudinal centerline of the femur.

(4) Guide the pendulum so that there is no significant lateral, vertical, or rotational movement at the time of initial contact between the impactor and the knee.

(5) The test probe velocity at the time of contact shall be 2.1 ± 0.03 m/s (6.9 ± 0.1 ft/s).

(6) No suspension hardware, suspension cables, or any other attachments to the probe, including the velocity vane, shall make contact with the dummy during the test.

§ 572.177 Test conditions and instrumentation.

(a) The following test equipment and instrumentation is needed for qualification as set forth in this subpart:

(1) The test probe for thoracic impacts is of rigid metallic construction, concentric in shape, and symmetric about its longitudinal axis. It has a mass of 6.89 ± 0.012 kg (15.2 ± 0.05 lb) and a minimum mass moment of inertia of 2040 kg-cm^2 (1.81 lbf-in-sec^2) in yaw and pitch about the CG. One-third (⅓) of the weight of the suspension cables and their attachments to the impact probe is included in the calculation of mass, and such components may not exceed five percent of the total weight of the test probe. The impacting end of the probe, perpendicular to and concentric with the longitudinal axis, is at least 25.4 mm (1.0 in) long, and has a flat, continuous, and non-deformable 121 ± 0.25 mm (4.76 ± 0.01 in) diameter face with a maximum edge radius of 12.7 mm (0.5 in). The probe's end opposite to the impact face has provisions for mounting of an accelerometer with its sensitive axis collinear with the longitudinal axis of the probe. No concentric portions of the impact probe may exceed the diameter of the impact face. The impact probe has a free air resonant frequency of not less than 1000 Hz, which may be determined using the procedure listed in the PADI (incorporated by reference, see § 572.170).

(2) The test probe for knee impacts is of rigid metallic construction, concentric in shape, and symmetric about its longitudinal axis. It has a mass of 1.91 ± 0.01 kg (4.21 ± 0.02 lb) and a minimum mass moment of inertia of 140 kg-cm^2 (0.124 lbf-in-sec^2) in yaw and pitch about the CG. One third (⅓) of the weight of the suspension cables and their attachments to the impact probe may be included in the calculation of mass, and such components may not exceed five percent of the total weight of the test probe. The impacting end of the probe, perpendicular to and concentric with the longitudinal axis, is at least 12.5 mm (0.5 in) long, and has a flat, continuous, and non-deformable 76.2 ± 0.2 mm (3.00 ± 0.01 in) diameter face with a maximum edge radius of 12.7 mm (0.5 in). The probe's end opposite to the impact face has provisions for mounting an accelerometer with its sensitive axis collinear with the longitudinal axis of the probe. No concentric portions of the impact probe may exceed the diameter of the impact face. The impact probe has a free air resonant frequency of not less than 1000 Hz, which may be determined using the procedure listed in the PADI (incorporated by reference, see § 572.170).

(3) Head accelerometers have dimensions, response characteristics, and sensitive mass locations specified in drawing SA572–S4 (included in drawing 420–0000) and are mounted in the head as shown in drawing 420–0000 (both incorporated by reference, see § 572.170), sheet 2 of 6.

(4) The upper neck force and moment transducer has the dimensions, response characteristics, and sensitive axis locations specified in drawing SA572–S11 (included in drawing 420–0000) and is mounted in the head-neck assembly as shown in drawing 420–0000 (both incorporated by reference, see § 572.170), sheet 2 of 6.

(5) The chest deflection transducer has the dimensions and response characteristics specified in drawing SA572–S50 (included in drawing 420–0000) and is mounted to the upper torso assembly as shown in drawing 420–0000 (both incorporated by reference, see § 572.170), sheet 2 of 6.

(b) The following instrumentation may be required for installation in the dummy for compliance testing. If so, it is installed during qualification procedures as described in this subpart:

(1) The thorax CG accelerometers have the dimensions, response characteristics, and sensitive mass locations specified in drawing SA572–S4 (included in drawing 420–0000) (incorporated by reference, see § 572.170) and are mounted in the torso assembly in a triaxial configuration within the spine box instrumentation cavity.

(2) The lower neck force and moment transducer has the dimensions, response characteristics, and sensitive axis locations specified in drawing SA572–S40 (included in drawing 420–0000) and is mounted to the neck assembly by replacing the lower neck mounting bracket 420–2070 as shown in drawing 420–2000 (all incorporated by reference, see § 572.170).

(3) The clavicle force transducers have the dimensions, response characteristics, and sensitive axis locations specified in drawing SA572–S41 (included in drawing 420–0000) and are mounted in the shoulder assembly as shown in drawing 420–3800 (both incorporated by reference, see § 572.170).

(4) The IR–Tracc chest deflection transducers have the dimensions and response characteristics specified in drawing SA572–S43 (included in drawing 420–0000) and are mounted to

the spine box assembly as shown in drawing 420–8000 (both incorporated by reference, see § 572.170).

(5) The spine and sternum accelerometers have the dimensions, response characteristics, and sensitive mass locations specified in drawing SA572–S4 (included in drawing 420–0000) and are mounted in the torso assembly in uniaxial fore-and-aft oriented configuration arranged as corresponding pairs in two locations each on the sternum and at the spine box of the upper torso assembly as shown in drawing 420–0000 (both incorporated by reference, see § 572.170), sheet 2 of 6.

(6) The lumbar spine force-moment transducer has the dimensions, response characteristics, and sensitive axis locations specified in drawing SA572–S12 (included in drawing 420–0000) and is mounted in the lower torso assembly as shown in drawing 420–4000 (both incorporated by reference, see § 572.170).

(7) The iliac force transducers have the dimensions and response characteristics specified in drawing SA572–S13 L and R (included in drawing 420–0000) and are mounted in the lower torso assembly as shown in drawing 420–4000 (both incorporated by reference, see § 572.170).

(8) The pelvis accelerometers have the dimensions, response characteristics, and sensitive mass locations specified in drawing SA572–S4 (included in drawing 420–0000) and are mounted in the torso assembly in triaxial configuration in the pelvis bone as shown in drawing 420–0000 (both incorporated by reference, see § 572.170), sheet 2 of 6.

(9) The femur force and moment transducers (SA572–S10, included in drawing 420–0000) have the dimensions, response characteristics, and sensitive axis locations specified in the appropriate drawing and are mounted in the upper leg assembly, replacing the femur load cell simulator (drawing 420–5121) as shown in drawing 420–5100 (all incorporated by reference, see § 572.170).

(10) The tilt sensors have the dimensions and response characteristics specified in drawing SA572–S42 (included in drawing 420–0000) and are mounted to the head, thorax, and pelvis assemblies as shown in drawing 420–0000 (both incorporated by reference, see § 572.170), sheet 2 of 6.

(c) The outputs of transducers installed in the dummy and in the test equipment specified by this part are to be recorded in individual data channels that conform to SAE Recommended Practice J211 (incorporated by reference, see § 572.170) except as noted, with channel frequency classes as follows:

(1) Pendulum acceleration, CFC 180,

(2) Pendulum D-plane rotation (if transducer is used), CFC 60,

(3) Torso flexion pulling force (if transducer is used), CFC 60,

(4) Head acceleration, CFC 1000,

(5) Neck forces, upper and lower, CFC 1000,

(6) Neck moments, upper and lower, CFC 600,

(7) Thorax CG acceleration, CFC 180,

(8) Sternum deflection, Class 600,

(9) Sternum and rib accelerations, Class 1000,

(10) Spine accelerations, CFC 180,

(11) Lumbar forces, CFC 1000,

(12) Lumbar moments, CFC 600,

(13) Shoulder forces, CFC 180,

(14) Pelvis accelerations, CFC 1000,

(15) Iliac forces, CFC 180,

(16) Femur and tibia forces, CFC 600,

(17) Femur and tibia moments, CFC 600.

(d) Coordinate signs for instrumentation polarity are to conform to SAE Information Report J1733 (incorporated by reference, see § 572.170).

(e) The mountings for sensing devices have no resonant frequency less than 3 times the frequency range of the applicable channel class.

(f) Limb joints are set at one G, barely restraining the weight of the limb when it is extended horizontally. The force needed to move a limb segment is not to exceed 2G throughout the range of limb motion.

(g) Performance tests of the same component, segment, assembly, or fully assembled dummy are separated in time by not less than 30 minutes unless otherwise noted.

(h) Surfaces of dummy components may not be painted except as specified in this subpart or in drawings subtended by this subpart.

Appendix—Figures to Subpart T of Part 572

BILLING CODE 4910–59–P

FIGURE T1
HEAD DROP TEST SET-UP SPECIFICATIONS

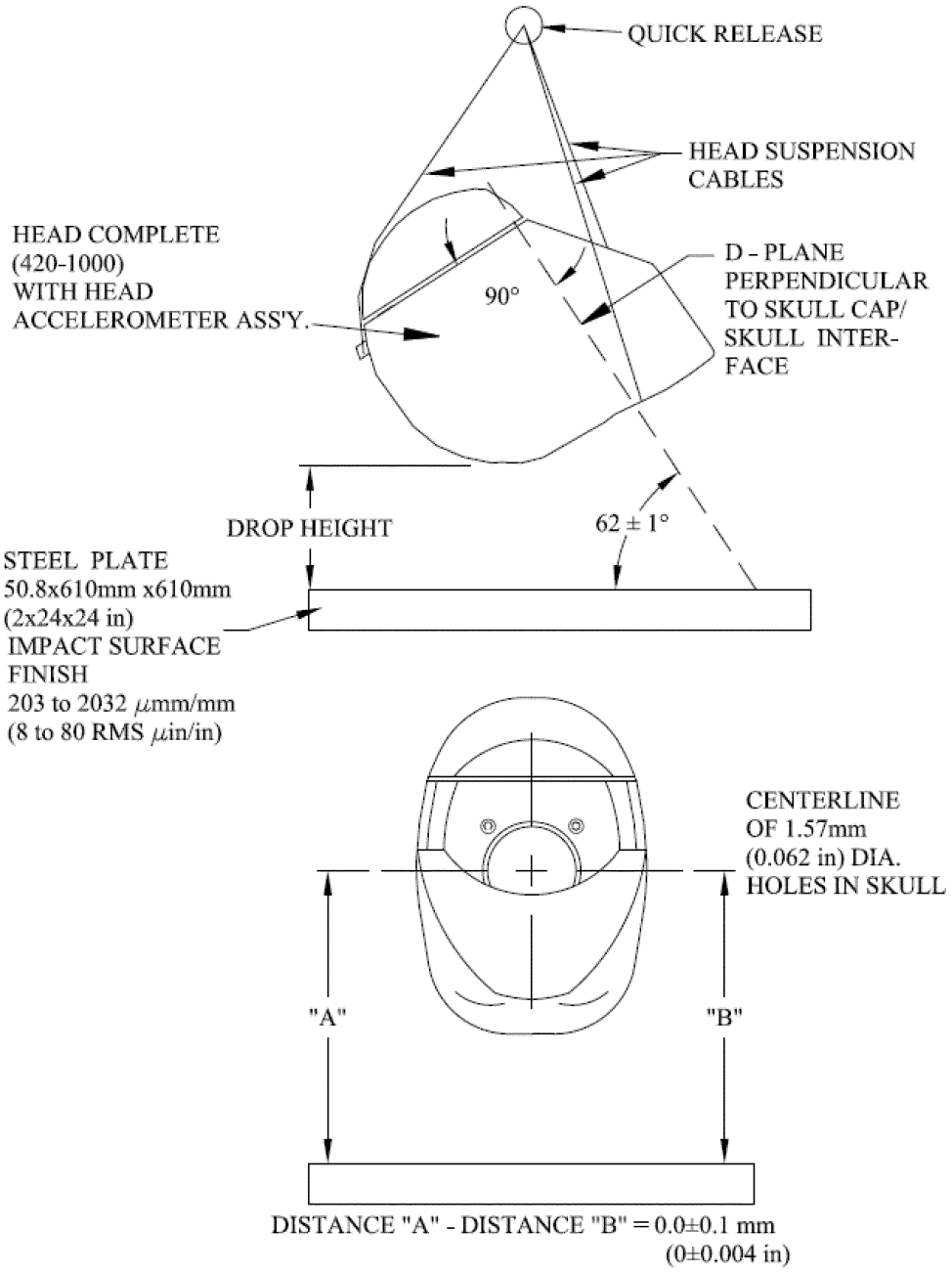

FIGURE T2
NECK FLEXION TEST SET-UP SPECIFICATIONS

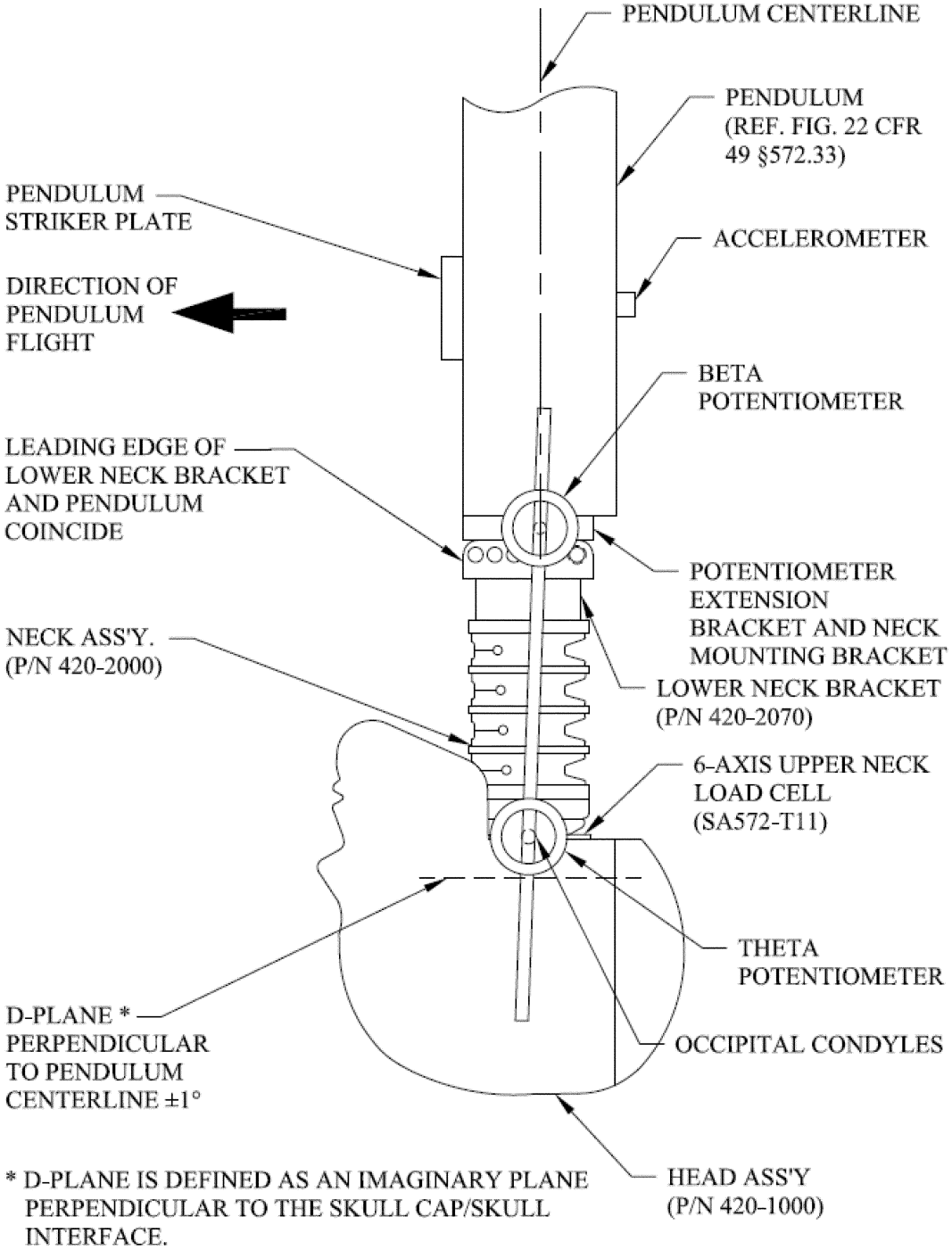

* D-PLANE IS DEFINED AS AN IMAGINARY PLANE PERPENDICULAR TO THE SKULL CAP/SKULL INTERFACE.

FIGURE T3
NECK EXTENSION TEST SET-UP SPECIFICATIONS

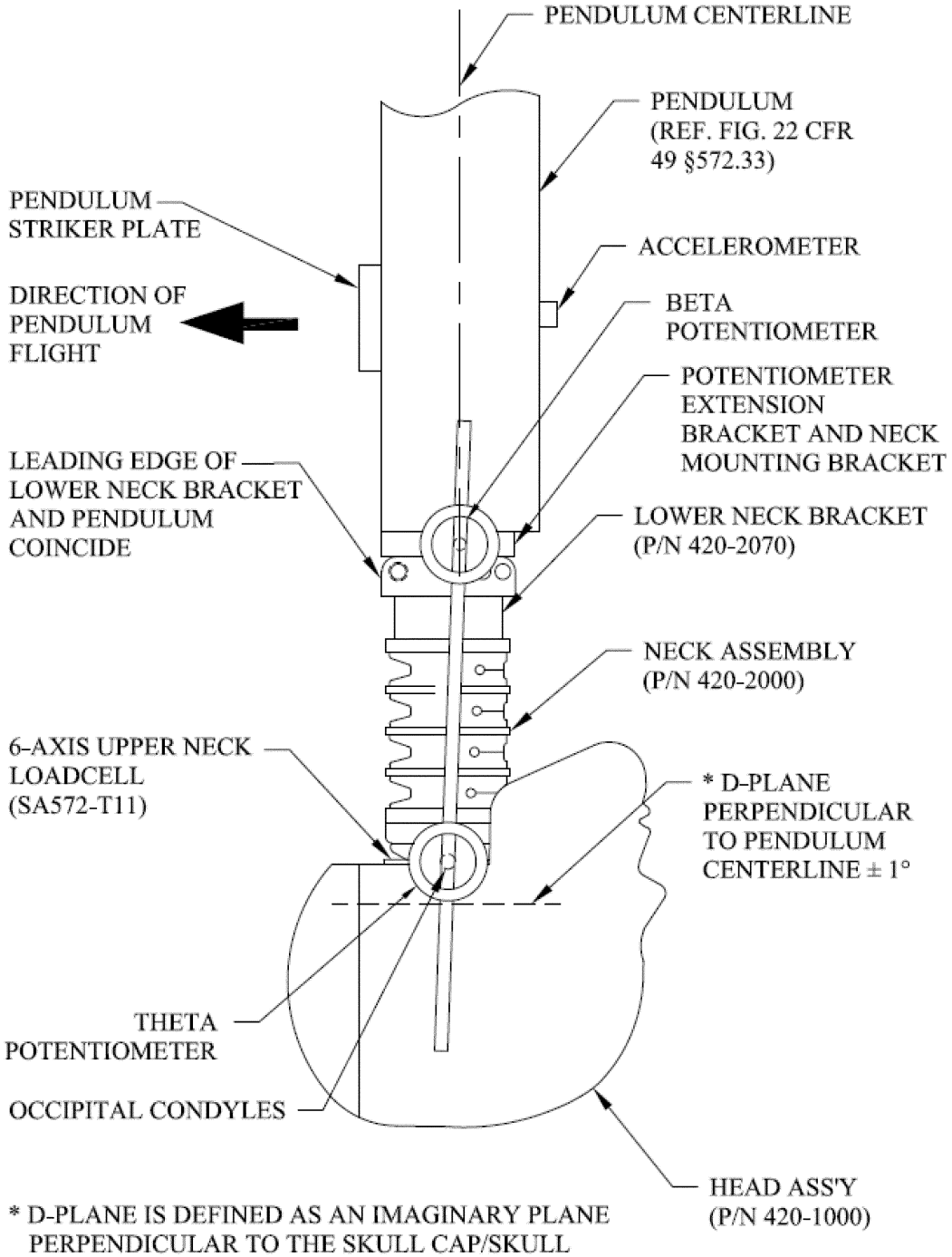

* D-PLANE IS DEFINED AS AN IMAGINARY PLANE PERPENDICULAR TO THE SKULL CAP/SKULL INTERFACE.

FIGURE T4
THORAX IMPACT TEST SET-UP SPECIFICATIONS

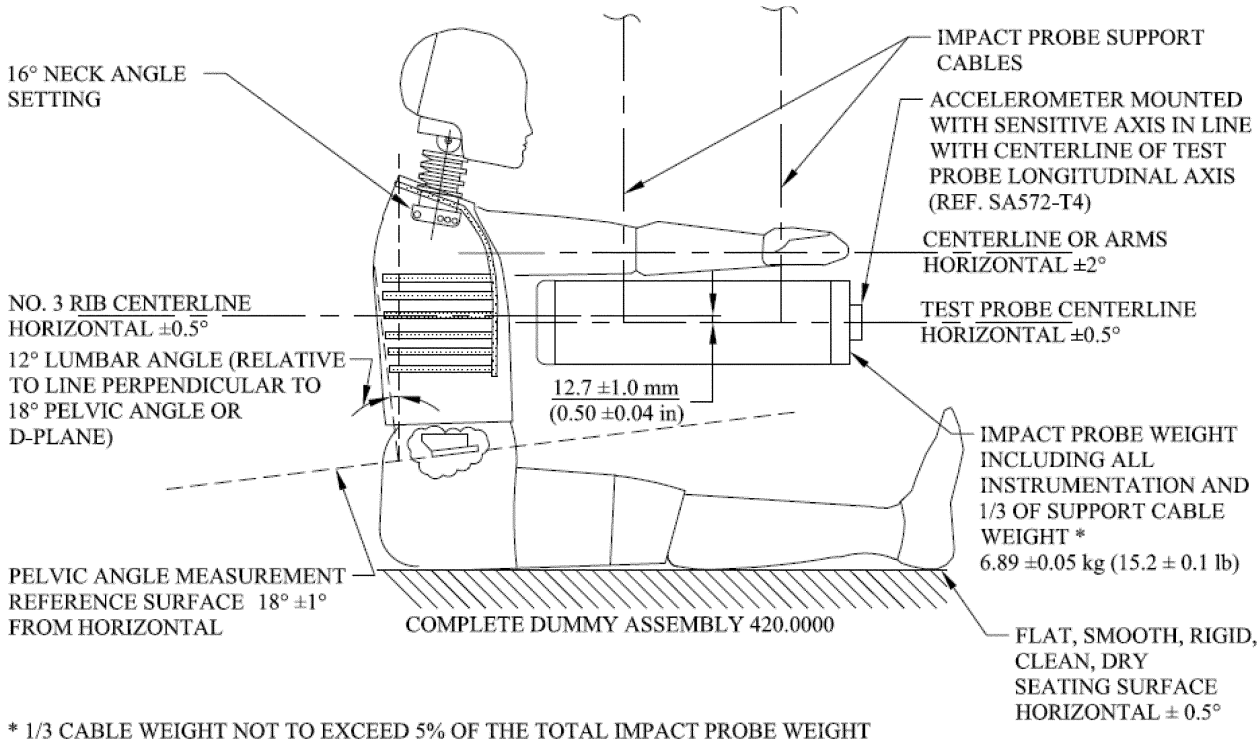

* 1/3 CABLE WEIGHT NOT TO EXCEED 5% OF THE TOTAL IMPACT PROBE WEIGHT

FIGURE T5
TORSO FLEXION TEST SETUP SPECIFICATIONS

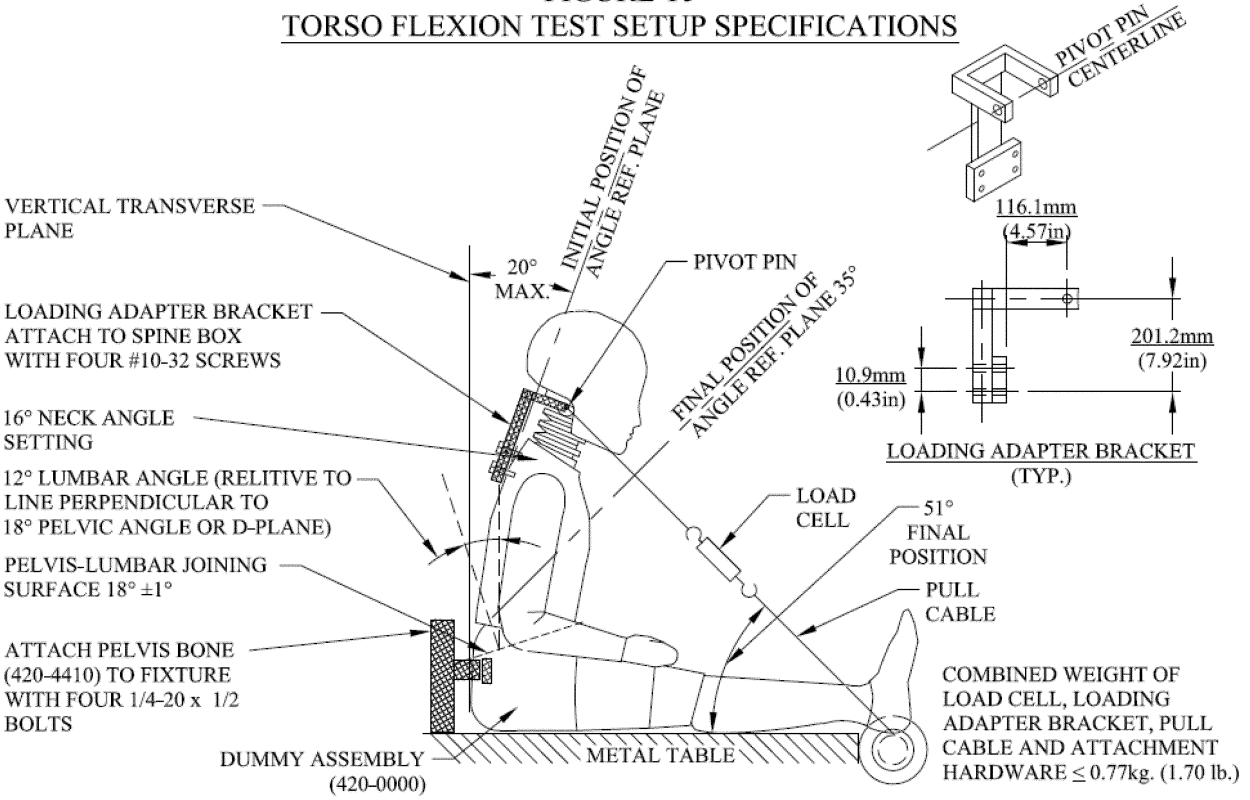

FIGURE T6
KNEE IMPACT TEST SET-UP SPECIFICATIONS

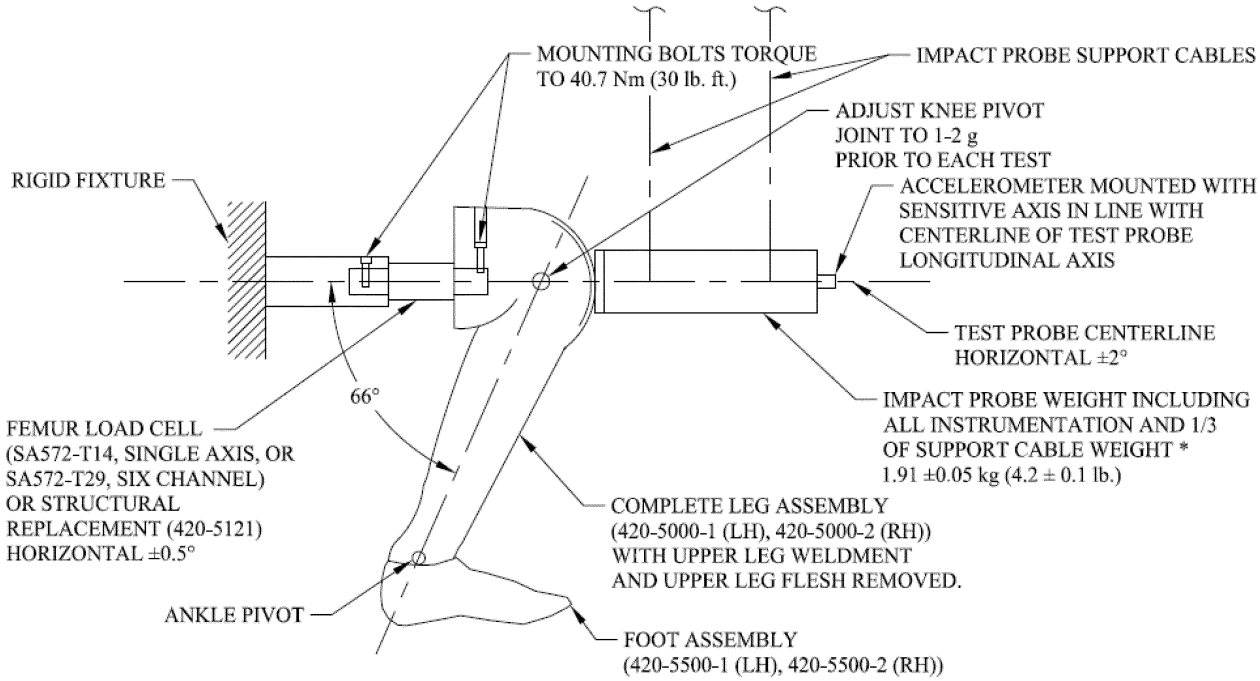

Issued on: February 16, 2012.

David L. Strickland,

Administrator.

[FR Doc. 2012–4129 Filed 2–21–12; 11:15 am]

BILLING CODE 4910–59–C