AUTHENTICATED
U.S. GOVERNMENT
INFORMATION
GPO

FEDERAL REGISTER

Vol. 76 Wednesday
No. 12 January 19, 2011

Part II

Department of Transportation

National Highway Traffic Safety Administration

49 CFR Parts 571 and 585
Federal Motor Vehicle Safety Standards, Ejection Mitigation; Phase-In Reporting Requirements; Incorporation by Reference; Final Rule

DEPARTMENT OF TRANSPORTATION

National Highway Traffic Safety Administration

49 CFR Parts 571 and 585

[Docket No. NHTSA–2011–0004]

RIN 2127–AK23

Federal Motor Vehicle Safety Standards, Ejection Mitigation; Phase-In Reporting Requirements; Incorporation by Reference

AGENCY: National Highway Traffic Safety Administration (NHTSA), U.S. Department of Transportation (DOT).

ACTION: Final rule.

SUMMARY: This final rule establishes a new Federal Motor Vehicle Safety Standard No. 226, "Ejection Mitigation," to reduce the partial and complete ejection of vehicle occupants through side windows in crashes, particularly rollover crashes. The standard applies to the side windows next to the first three rows of seats, and to a portion of the cargo area behind the first or second rows, in motor vehicles with a gross vehicle weight rating (GVWR) of 4,536 kilogram (kg) or less (10,000 pounds (lb) or less). To assess compliance, the agency is adopting a test in which an impactor is propelled from inside a test vehicle toward the windows. The ejection mitigation safety system is required to prevent the impactor from moving more than a specified distance beyond the plane of a window. To ensure that the systems cover the entire opening of each window for the duration of a rollover, each side window will be impacted at up to four locations around its perimeter at two time intervals following deployment.

The agency anticipates that manufacturers will meet the standard by modifying existing side impact air bag curtains, and possibly supplementing them with advanced glazing. The curtains will be made larger so that they cover more of the window opening, made more robust to remain inflated longer, and made to deploy in both side impacts and in rollovers. In addition, after deployment the curtains will be tethered near the base of the vehicle's pillars or otherwise designed to keep the impactor within the boundaries established by the performance test. This final rule adopts a phase-in of the new requirements, starting September 1, 2013.

This final rule advances NHTSA's initiatives in rollover safety and also responds to Section 10301 of the Safe, Accountable, Flexible, Efficient Transportation Equity Act: A Legacy for Users (SAFETEA–LU). That section directs NHTSA to initiate and complete rulemaking to reduce complete and partial ejections of vehicle occupants from outboard seating positions, considering various ejection mitigation systems.

DATES: *Effective date:* The date on which this final rule amends the Code of Federal Regulations (CFR) is March 1, 2011. The incorporation by reference of certain publications listed in the standard is approved by the Director of the Federal Register as of March 1, 2011.

Petitions for reconsideration: If you wish to petition for reconsideration of this rule, your petition must be received by March 7, 2011.

Compliance dates: This final rule adopts a phase-in of the new requirements. The phase-in begins on September 1, 2013. By September 1, 2017, all vehicles must meet the standard, with the exception of altered vehicles and vehicles produced in more than one stage, which are provided more time to meet the requirements. Manufacturers can earn credits toward meeting the applicable phase-in percentages by producing compliant vehicles ahead of schedule, beginning March 1, 2011 and ending at the conclusion of the phase-in.

ADDRESSES: If you wish to petition for reconsideration of this rule, you should refer in your petition to the docket number of this document and submit your petition to: Administrator, National Highway Traffic Safety Administration, 1200 New Jersey Avenue, SE., West Building, Washington, DC 20590.

The petition will be placed in the docket. Anyone is able to search the electronic form of all documents received into any of our dockets by the name of the individual submitting the comment (or signing the comment, if submitted on behalf of an association, business, labor union, etc.). You may review DOT's complete Privacy Act Statement in the **Federal Register** published on April 11, 2000 (Volume 65, Number 70; Pages 19477–78).

For access to the docket to read background documents or comments received, go to *http://www.regulations.gov* and follow the online instructions for accessing the docket. You may also visit DOT's Docket Management Facility, 1200 New Jersey Avenue, SE., West Building Ground Floor, Room W12–140, Washington, DC 20590–0001 for on-line access to the docket.

FOR FURTHER INFORMATION CONTACT: For non-legal issues, you may contact Mr. Louis Molino, NHTSA Office of Crashworthiness Standards, telephone 202–366–1740, fax 202–493–2739. For legal issues, you may contact Ms. Deirdre Fujita, NHTSA Office of Chief Counsel, telephone 202–366–2992, fax 202–366–3820.

You may send mail to these officials at the National Highway Traffic Safety Administration, U.S. Department of Transportation, 1200 New Jersey Avenue, SE., West Building, Washington, DC 20590.

SUPPLEMENTARY INFORMATION:

Table of Contents

I. Executive Summary
II. Safety Need
III. Congressional Mandate
IV. Summary of the NPRM
V. Summary of the Comments
VI. How the Final Rule Differs From the NPRM
VII. Foundations for This Rulemaking
a. Advanced Glazing
b. Full Window Opening Coverage Is Key
c. Comparable Performance in Simulated Rollovers and Component-Level Impact Tests
d. Advantages of a Component Test Over a Full Vehicle Dynamic Test
VIII. Availability of Existing Curtains
IX. Existing Curtains
a. Existing Curtains Tested to Proposed Requirements
b. Field Performance
X. Response to Comments and Agency Decisions
a. Impactor Dimensions and Mass
1. NPRM
2. Comments
3. Agency Response
b. Measurement Plane and Displacement Limit (100 mm)
1. NPRM
2. Comments
3. Agency Response
c. Times and Speed at Which the Headform Impacts the Countermeasure
1. NPRM on Time Delay (Ejections Can Occur Both Early and Late in the Rollover Event)
i. Comments on Time Delay
ii. Agency Response
2. Speed at Which the Headform Impacts the Countermeasure
i. Comments on Impact Speed
ii. Agency Response
d. Target Locations
1. Why We Are Focusing on Side Windows and Not Other Openings
2. Why We Are Focusing on the Side Windows Adjacent to First Three Rows
i. First Three Rows
ii. Method of Determining 600 mm Behind Seating Reference Point (SgRP)
iii. Increasing 600 mm Limit for Vehicles With One or Two Rows of Seats
3. Answers to Questions About Method for Determining Three-Row Area
e. How We Are Testing the Ability of These Side Windows To Mitigate Ejections
1. What is a "window opening"?
i. 50 mm Inboard of the Glazing

ii. Conducting the Test With Various Items Around the Window Opening
iii. Removing Flexible Gasket Material
iv. Testing With Weather Stripping in Place
v. Metal Dividers in Glazing
2. How We Determine Impactor Target Locations in an Objective and Repeatable Manner
i. Testing in "Any" Location
ii. Methodology
iii. Reorienting the Targets
iv. Suppose Even With Rotating the Headform the Vehicle Has No Target Locations
v. Decision Not To Test Target of Greatest Displacement
vi. Reconstitution of Targets
f. Glazing Issues
1. Positioning the Glazing
2. Window Pre-Breaking Specification and Method
g. Test Procedure Tolerances
h. Impactor Test Device Characteristics
i. Readiness Indicator
j. Other Issues
1. Rollover Sensors
2. Quasi-Static Loading
3. Full Vehicle Test
4. Minor Clarifications to the Proposed Regulatory Text
k. Practicability
l. Applicability
1. Convertibles
2. Original Roof Modified
3. Multi-Stage Manufacture of Work Trucks
4. Other
m. Lead Time and Phase-In Schedules; Reporting Requirements
XI. Costs and Benefits
XII. Rulemaking Analyses and Notices

I. Executive Summary

This final rule establishes a new Federal Motor Vehicle Safety Standard (FMVSS) No. 226, "Ejection Mitigation," to reduce the partial and complete ejection of vehicle occupants through side windows in crashes, particularly rollover crashes. Countermeasures installed to meet this rule will also reduce the number of complete and partial ejections of occupants in side impacts. This final rule responds to section 10301 of the Safe, Accountable, Flexible, Efficient Transportation Equity Act: A Legacy for Users," (SAFETEA–LU), Public Law 109–59 (Aug. 10, 2005; 119 Stat. 1144), which requires the Secretary of Transportation to issue an ejection mitigation final rule reducing complete and partial ejections of occupants from outboard seating positions.

Addressing vehicle rollovers is one of NHTSA's highest safety priorities. In 2002, NHTSA conducted an in-depth review of rollovers and associated deaths and injuries and assessed how this agency and the Federal Highway Administration (FHWA) could most effectively improve safety in this area.[1] The agency formulated strategies involving improving vehicle performance and occupant behavior, and with the FHWA taking the lead, improving roadway designs. Vehicle performance strategies included crash avoidance and crashworthiness programs, and included four wide-ranging initiatives to address the rollover safety problem: prevent crashes, prevent rollovers, prevent ejections, and protect occupants who remain within the vehicle after a crash. Projects aimed at protecting occupants remaining in the vehicle during a rollover included improved roof crush resistance and research on whether seat belts could be made more effective in rollovers.

A major undertaking implementing the first two initiatives was completed in 2007 when NHTSA adopted a new FMVSS No. 126 (49 CFR 571.126), "Electronic Stability Control Systems," to require electronic stability control (ESC) systems on passenger cars, multipurpose passenger vehicles, trucks, and buses with a gross vehicle weight rating (GVWR) of 4,536 kg (10,000 lb) or less (72 FR 17236, April 6, 2007, Docket NHTSA–2007–27662). ESC systems use automatic computer-controlled braking of the individual wheels of a vehicle to assist the driver in maintaining control in critical driving situations in which the vehicle is beginning to lose directional stability at the rear wheels (spin out) or directional control at the front wheels (plow out). Because most loss-of-control crashes culminate in the vehicle's leaving the roadway—an event that significantly increases the probability of a rollover—preventing single-vehicle loss-of-control crashes is the most effective way to reduce deaths resulting from rollover crashes.[2] The agency estimates that when all vehicles (other than motorcycles) under 4,536 kg GVWR have ESC systems, the number of deaths each year resulting from rollover crashes would be reduced by 4,200 to 5,500. From 2001 to 2007, there were more than 10,000 deaths in light vehicle rollover crashes. Rollover deaths have decreased slightly in 2008 (9,043) and 2009 (8,267), as have fatalities in all crash types.

While ESC systems will avoid many of the roadway departures that lead to rollover, vehicle rollovers will continue to occur.[3] Once a rollover occurs, vehicle crashworthiness characteristics play a crucial role in protecting the occupants. According to agency data, occupants have a much better chance of surviving a crash if they are not ejected from their vehicles.

Concurrent with the agency's work on ESC, NHTSA began work on the third initiative on rollover safety, pursuing the feasibility of installing crashworthiness safety systems to mitigate occupant ejections through side windows in rollovers ("ejection mitigation"). Major strides on this third initiative were realized in 2007 when the agency published a final rule that incorporated a dynamic pole test into FMVSS No. 214, "Side impact protection" (49 CFR 571.214) ("Phase 1 FMVSS No. 214 rulemaking").[4] The pole test, applying to motor vehicles with a GVWR of 4,536 kg or less, requires vehicle manufacturers to provide side impact protection for a wide range of occupant sizes and over a broad range of seating positions. To meet the pole test, manufacturers are installing new technologies capable of improving head and thorax protection in side crashes, i.e., side curtain air bags and torso air bags.

Today's final rule launches a new phase in occupant protection and ejection mitigation. It builds on and

[1] The assessment was carried out by one of four Integrated Project Teams (IPTs) formed within NHTSA, whose recommendations culminated in the agency's priority plan, "NHTSA Vehicle Safety Rulemaking and Supporting Research: 2003–2006" (68 FR 43972; July 18, 2003) *http://www.nhtsa.dot.gov/cars/rules/rulings/PriorityPlan/FinalVeh/Index.html.* The IPT Report on Rollover was published in June 2003 (68 FR 36534, Docket 14622).

[2] NHTSA estimates that the installation of ESC will reduce single-vehicle crashes of passenger cars by 34 percent and single vehicle crashes of sport utility vehicles (SUVs) by 59 percent. NHTSA further estimates that ESC has the potential to prevent 71 percent of the passenger car rollovers and 84 percent of the SUV rollovers that would otherwise occur in single-vehicle crashes. NHTSA estimates that ESC would save 5,300 to 9,600 lives and prevent 156,000 to 238,000 injuries in all types of crashes annually once all light vehicles on the road are equipped with ESC systems.

[3] NHTSA has developed a Final Regulatory Impact Analysis (FRIA) for this final rule that discusses issues relating to the target population and the potential costs, benefits and other impacts of this regulatory action. The FRIA is available in the docket for this final rule and may be obtained by downloading it or by contacting the Docket Management facility at the address provided at the beginning of this document.

[4] 72 FR 51908; September 11, 2007, Docket No. NHTSA–29134; response to petitions for reconsideration, 73 FR 32473, June 9, 2008, Docket No. NHTSA–2008–0104, 75 FR 12123, March 15, 2010, Docket No. NHTSA–2010–0032. On August 10, 2005, the "Safe, Accountable, Flexible, Efficient Transportation Equity Act: A Legacy for Users," (SAFETEA–LU), Public Law 109–59 (Aug. 10, 2005; 119 Stat. 1144) was enacted, to authorize funds for Federal-aid highways, highway safety programs, and transit programs, and for other purposes. Section 10302(a) of SAFETEA–LU directed the Secretary to complete the FMVSS No. 214 rulemaking by July 1, 2008. The September 11, 2007 final rule completed the rulemaking specified in section 10302(a). NHTSA estimates that the September 11, 2007 final rule will save 311 lives annually.

improves existing technology while achieving cost efficiency and does so expeditiously. This final rule enhances the side curtain air bag systems installed pursuant to the FMVSS No. 214 side impact rulemaking. Side curtain air bags [5] will be made larger to cover more of the window opening, more robust to remain inflated longer, enhanced to deploy in side impacts and in rollovers, and made not only to cushion but also made sufficiently strong to keep an occupant from being fully or partially ejected through a side window. The side curtain air bags required by this rule will be designed to retain the occupant regardless of whether the occupant had his or her window glazing up, down, or partially open, and even when the glazing is destroyed during the rollover crash.

The NPRM upon which this final rule is based was published on December 2, 2009 (74 FR 63180, Docket No. NHTSA–2009–0183). Materials underlying the development of this rule have been placed in that docket and in a research and development docket created in 2006 (Docket No. NHTSA–2006–26467).

Rollover crashes can be complex and unpredictable. At this time there is no conventional rollover scenario or test representative of real-world rollover crashes that can be used in a dynamic test to the agency's satisfaction to evaluate the performance of ejection mitigation countermeasures. Yet, this final rule achieves ejection mitigation benefits notwithstanding the absence of a dynamic procedure. Agency research has found that full coverage of the side windows is a key element to mitigating ejection. This standard adopts a component test that assures there is full coverage of the side window to diminish the potential risk of the windows as ejection portals and that assesses ejection mitigation safety systems for as long in the crash event as the risk of ejection reasonably exists.

The test uses a guided impactor to assess the ability of the countermeasure (*e.g.,* a curtain system) to mitigate ejections in different types of rollover and side impact crashes involving different occupant kinematics. The test has been carefully designed to represent occupant to vehicle interactions in a dynamic rollover event. The impact mass is based on the mass imposed by a 50th percentile male's head and upper torso on the window opening during an occupant ejection. The mass of the impactor, 18 kilograms (kg) (40 lb), is propelled at points around the window's perimeter with sufficient kinetic energy to assure that the ejection mitigation countermeasure is able to protect a far-reaching range of occupants in real world crashes.

In the test, the countermeasure must retain the linear travel of the impactor such that the impactor must not travel 100 millimeters (mm) beyond the location of the inside surface of the vehicle glazing. This displacement limit serves to control the size of any gaps forming between the countermeasure (*e.g.,* the ejection mitigation side curtain air bag) and the window opening, thus reducing the potential for both partial and complete ejection of an occupant.

To evaluate the performance of the curtain to fully cover potential ejection routes, the impactor will typically target four specific locations per side window adjacent to the first three rows of the vehicle. Impacting four targets around the perimeter of the opening assures that the window will be covered by the countermeasure (curtain), while imposing a reasonable test burden. Small windows will be tested with fewer targets.

Computer modeling has shown that ejections can occur early and late in the rollover event. In the standard's test procedure, the ejection mitigation side countermeasure will be tested at two impact speeds and at two different points in time, to ensure that the protective system will retain the occupant from the relatively early through the late stages of a rollover.

The times at which the impacts will occur are data-driven and related to our goal of containment of occupants both early and late in rollovers. Crash data show that slightly less than half of all fatal complete ejections occurred in crashes with 5 or fewer quarter-turns. Film analysis of vehicles that rolled 5 or fewer quarter-turns in staged rollover tests indicates that it took about 1.5 seconds for the vehicles to roll once completely. A vehicle rolling 11 quarter-turns had a maximum roll time of 5.5 seconds. Data from the National Automotive Sampling System (NASS) Crashworthiness Data System (CDS) show that rollovers with eleven or fewer quarter-turns account for about 98 percent of rollovers with fatal complete ejection.[6] The standard replicates these crash dynamics with the two impacts of the headform. The first impact will be at 20 kilometers per hour (km/h) (12.4 miles per hour (mph)), 1.5 seconds after deployment of the curtain. The second impact will be at 16 km/h (9.9 mph), 6 seconds after deployment of the curtain. The 20 km/h and 16 km/h tests replicate the forces that an occupant can impart to the curtain during the rollover event as well as during side impacts.

Under today's final rule, vehicle manufacturers must provide information to NHTSA upon request that describes the conditions under which ejection mitigation air bags will deploy. There is no presently demonstrated need for us to specify in the standard the conditions dictating when the sensors should deploy; field data indicate that rollover sensors are overwhelmingly deploying effectively in the real world. We will keep monitoring field data to determine whether future regulatory action is needed in this area.

This chapter in occupant protection will achieve tremendous benefits at reasonable costs. We estimate that this rule will save 373 lives and prevent 476 serious injuries per year (see Table 1 below). The cost of this final rule is approximately $31 per vehicle (see Table 2). The cost per equivalent life saved is estimated to be $1.4 million (3 percent discount rate)–$1.7 million (7 percent discount rate) (see Table 3 below). Annualized costs and benefits are provided in Table 4.

TABLE 1—ESTIMATED BENEFITS

Fatalities	373
Serious Injuries	476

TABLE 2—ESTIMATED COSTS*

[2009 economics]

Per Vehicle	$31.
Total Fleet (16.5 million vehicles).	$507 Million

* The system costs are based on vehicles that are equipped with an FMVSS No. 214 curtain system. According to vehicle manufacturers' projections made in 2006, 98.7 percent of Model Year (MY) 2011 vehicles will be equipped with curtain bags and 55 percent of vehicles with curtain bags will be equipped with a rollover sensor.

TABLE 3—COST PER EQUIVALENT LIFE SAVED

3% Discount rate	7% Discount rate
$1.4M	$1.7M

[5] In this document, this countermeasure is referred to as an "ejection mitigation side curtain air bag," "side curtain air bag," "air bag curtain," "rollover curtain," or simply "curtain." This countermeasure is designed to deploy in a rollover crash. The same side curtain air bag meeting FMVSS No. 226 can be used to meet the ejection mitigation requirements of FMVSS No. 214 with the addition of a rollover sensing system to deploy the side curtain air bag in a rollover.

[6] This is based on 2000–2009 NASS data. The 1988—2005 NASS data reported in the NPRM showed that 93 percent of rollovers with fatal complete ejections had 11 or fewer quarter-turns.

TABLE 4—ANNUALIZED COSTS AND BENEFITS

[In millions of $2009 dollars]

	Annual costs	Annualized benefits	Net benefits
3% Discount Rate	$507M	$2,279M	$1,773
7% Discount Rate	507M	1,814M	1,307

Accompanying today's final rule is a Final Regulatory Impact Analysis (FRIA) analyzing the costs, benefits, and other impacts of this final rule, and a technical report the agency has prepared that presents a detailed analysis of engineering studies, and other information supporting the final rule. Both documents have been placed in the docket for this final rule. The documents can be obtained by contacting the docket by the means specified at the beginning of this document or by downloading them at www.regulations.gov.

II. Safety Need

Rollover crashes are a significant and a particularly deadly safety problem. As a crash type, rollovers are second only to frontal crashes as a source of fatalities in light vehicles. Data from the last 10 years of Fatal Analysis Reporting System (FARS) files (2000–2009[7]) indicate that frontal crash fatalities have averaged about 11,600 per year, while rollover fatalities have averaged 10,037 per year. In 2009, 35 percent of all fatalities were in light vehicle rollover crashes. The last 10 years of data from the National Automotive Sampling System (NASS) General Estimates System (GES) indicate that an occupant in a rollover is 14 times more likely to be killed than an occupant in a frontal crash.[8]

Ejection is a major cause of death and injury in rollover crashes. According to 2000–2009 FARS data, on average 47 percent of the occupants killed in rollovers were completely ejected from their vehicle. During this time period, there were 358 fully ejected occupants killed for every 1,000 fully ejected occupants in rollover crashes, as compared to 14 of every 1,000 occupants not fully ejected occupants killed.[9] A double-pair comparison from the last ten years of FARS data show that avoiding complete ejection is associated with a 64 percent decrease in the risk of death.[10]

The majority of rollover crashes involve the vehicle rolling over two quarter-turns or less. However, the distribution of ejected occupants who are seriously injured (maximum abbreviated injury scale (MAIS) 3+) or killed is skewed towards rollovers with a higher number of quarter-turns. According to NASS Crashworthiness Data System (CDS) data of occupants exposed to a rollover crash from 2000 to 2009, half of all fatal complete ejections occurred in crashes with six or more quarter-turns.

Most occupants are ejected through side windows. In developing the target population estimates for this final rule we found that annualized injury data from 1997 to 2008 NASS CDS and fatality counts adjusted to the annual average from FARS for these same years[11] indicate that ejection through side windows is the greatest contributor to the ejection problem.[12] There were 16,272 MAIS 1–2 injuries, 5,209 MAIS 3–5 injuries, and 6,412 fatalities resulting from ejections through the side windows adjacent to the first three rows.

Table 5 below shows the MAIS 1–2, MAIS 3–5, and fatality distribution of ejected occupants by 11 potential ejection routes.[13] The "Not Glazing" category captures ejected occupants that did not eject through a glazing area or the roof (perhaps a door or an area of vehicle structure that was torn away during the crash). Roof ejections have been separated into "Roof Panel or Glazing" and "Roof Other." The former groups sunroofs, t-tops and targa-tops into a single category, whether made of glazing or having a sheet metal skin. The latter combines convertibles, modified roofs, camper tops and removable roofs. No distinction could be made as to whether these roof structures were open or closed prior to ejection.

TABLE 5—OCCUPANT INJURY AND FATALITY COUNTS BY EJECTION ROUTE IN ALL CRASH TYPES

[Annualized 1997–2008 NASS and FARS]

Ejection route	MAIS 1–2	MAIS 3–5	Fatal
Windshield	1,517	1,400	1,078
First-Row Windows	14,293	4,980	5,589
Second-Row Windows	1,700	641	796

[7] These data are updated from the 1998 to 2007 FARS data reported in the NPRM.

[8] The relative risk of fatality for each crash type can be assessed by dividing the number of fatalities in each crash type by the frequency of the crash type. The frequency of particular crash types is determined by police traffic crash reports (PARs).

[9] The data combines partially-ejected and un-ejected occupants together, because partial ejection is sometimes difficult to determine and the PAR-generated FARS data may not be an accurate representation of partially-ejected occupant fatalities.

[10] "Incremental Risk of Injury and Fatality Associated with Complete Ejection," NHTSA, 2010 (see the docket for this final rule).

[11] The target population estimate for the NPRM used 1997 to 2005 FARS data. The estimate for this final rule is based on an additional three years of data.

[12] In our data analysis for the NPRM to determine ejection routes, we assumed that an ejection route coding of "rear" in NASS CDS meant a second row window and that "other" glazing meant third and higher row side window ejections. The assumption was based on the coding of seat position in NASS. Since then, we have determined that an occupant coded as ejected through a "rear" window did not necessarily go through the second row window. Similarly, the coding of "other" glazing was determined not necessarily to mean third and higher row. Thus, for this final rule, for cases coded as ejected through "rear" or "other" glazing, we assume that the ejection was through a second row window in the following circumstances: the occupant was seated in the first two rows of a vehicle, or the vehicle was a convertible, two-door sedan, or four-door sedan (i.e., these are vehicles without a third row or cargo area). If an occupant was coded as seated in the third or higher row and was coded as ejected through a rear window or "other" glazing, we used the NASS Case Query System to undertake a hard copy review. We determined ejection routes in this manner for 41 unweighted rear window cases and 17 unweighted "other" glazing cases. A hard copy review of the "other" glazing cases showed that 9 were known 3rd row side window ejections, but five cases were miscoded. Four were actually backlight ejections and one was a sunroof ejection. The known 3rd row ejections were recoded as "Row 3 Window" ejections.

[13] All crash types are included, but the counts are restricted to ejected occupants who were injured.

TABLE 5—OCCUPANT INJURY AND FATALITY COUNTS BY EJECTION ROUTE IN ALL CRASH TYPES—Continued

[Annualized 1997–2008 NASS and FARS]

Ejection route	MAIS 1–2	MAIS 3–5	Fatal
Third-Row Windows	279	88	27
Fourth-Row Windows	0	0	39
Fifth-Row Window	0	0	7
Cargo Area Rear of Row 2	342	17	52
Backlight	1,621	1,364	495
Roof Panel or Glazing	1,000	367	324
Roof Other	420	105	81
Multiple Windows	0	19	0
Not Glazing	2,848	2,207	1,814
Subtotals:			
Rows 1–3	16,272	5,709	6,412
4th, 5th Row and Cargo	342	17	98
Total	24,020	11,188	10,302

Table 6, below, provides the percentage of the total at each injury level. The injuries and fatalities resulting from ejections through the first three rows of windows constitute 68 percent of MAIS 1–2 injuries, 51 percent of MAIS 3–5 injuries, and 62 percent of all ejected fatalities.

TABLE 6—OCCUPANT INJURY AND FATALITY PERCENTAGES BY EJECTION ROUTE IN ALL CRASH TYPES

[Annualized 1997–2008 NASS and FARS]

Ejection route	MAIS 1–2	MAIS 3–5	Fatal
Windshield	6.3%	12.5%	10.5%
First-Row Windows	59.5%	44.5%	54.2%
Second-Row Windows	7.1%	5.7%	7.7%
Third-Row Windows	1.2%	0.8%	0.3%
Fourth-Row Windows	0.0%	0.0%	0.4%
Fifth-Row Window	0.0%	0.0%	0.1%
Cargo Area Rear of Row 2	1.4%	0.2%	0.5%
Backlight	6.8%	12.2%	4.8%
Roof Panel or Glazing	4.2%	3.3%	3.1%
Roof Other	1.7%	0.9%	0.8%
Multiple Windows	0.0%	0.2%	0.0%
Not Glazing	11.9%	19.7%	17.6%
Subtotals:			
Rows 1–3	67.7%	51.0%	62.2%
4th, 5th Row and Cargo	1.4%	0.2%	1.0%
Total	100.0%	100.0%	100.0%

Since the countermeasure covering side window openings will be made more effective in preventing ejections, this rulemaking will also reduce the number of complete and partial ejections of occupants in side impacts. These benefits go beyond those achieved in the rulemaking adopting an oblique pole test into FMVSS No. 214 (Phase 1 FMVSS No. 214 rulemaking) because a side air bag installed to meet FMVSS No. 214 is not necessarily wide or robust enough to effectively contain occupants in certain side impacts. In fact, NHTSA found that FMVSS No. 214's requirements could be met by a seat-mounted head/torso side air bag or a side head protection curtain air bag together with a seat-mounted or door-mounted torso bag. Further, FMVSS No. 214's pole test does not apply to rear seats. In short, FMVSS No. 214 does not require the large curtain needed for full coverage of side window openings.

Accordingly, this ejection mitigation safety standard will reduce the number of partial and complete ejections of occupants in side impacts. The Phase 1 FMVSS No. 214 rulemaking included reduction of partial ejections of adults (age 13+ years) through side windows in side impacts, but did not include complete ejections. The Phase 1 side impact rulemaking also did not include any impact where a rollover was the first event. In addition, benefits were only assumed in the Phase 1 FMVSS No. 214 rulemaking for side impact crashes with a change in velocity (ΔV) between 19.2 and 40.2 km/h (12 to 25 mph) and impact directions from 2 to 3 o'clock and 9 to 10 o'clock. The side curtain air bags used to meet FMVSS No. 226's ejection mitigation requirements will directly prevent many ejection-induced injuries and fatalities in side impacts that could not be saved by a side air bag that minimally complies with FMVSS No. 214.

Target Population

In general, the target population for this ejection mitigation final rule is composed of occupants injured or killed by ejection from the first three rows of side windows in vehicles to which the standard applies. Later in the preamble, we discuss some slight adjustments made concerning occupants ejected through cargo area window openings.

The target population does not include occupants ejected in all crash types, but rather is restricted to ejections that occur in crashes involving rollovers and some types of planar only side impacts. The limitation on side impacts, change in velocity (ΔV), and certain occupants in those side impacts is necessary to not count benefits anticipated by FMVSS No. 214.

Tables 7–9 provide the counts and/or percentages of the injured and killed side window (rows 1–3) ejected occupants by the window row they were ejected through. These data are restricted to rollover crashes and side impacts in the relevant ΔV range (target population type crashes).

Tables 7 and 8 show the ejection degree and restraint condition for occupants in the first three rows of target population type crashes. Among the side windows, the first row windows provide the ejection route for most of the injured and killed occupants. The greatest number of fatally ejected occupants (3,837) went through the first row window. This represents 88 percent of all side window ejected fatalities. Similarly, 3,979 (89 percent) MAIS 3–5 and 10,017 (87 percent) MAIS 1–2 injured occupants went through the row 1 windows. Within each row, the greatest number of fatal and MAIS 3–5 occupants were completely ejected and unbelted. There were 2,623 fatally injured (59 percent) and 2,269 MAIS 3–5 injured (50 percent) occupants who were unbelted and completely ejected through the row 1 windows.

TABLE 7—DISTRIBUTION OF FIRST 3 ROWS OF SIDE WINDOW EJECTED OCCUPANTS BY EJECTION ROW AND INJURY LEVEL BY EJECTION DEGREE AND BELT USE, IN TARGET POPULATION TYPE CRASHES

[Annualized 1997–2008 NASS and FARS]

Ejection degree	Belted	Row 1			Row 2			Row 3		
		MAIS 1–2	MAIS 3–5	Fatal	MAIS 1–2	MAIS 3–5	Fatal	MAIS 1–2	MAIS 3–5	Fatal
Complete	Yes	95	29	54	139	78	5	0	8	0
Complete	No	3,501	2,269	2,623	782	309	421	95	54	23
Partial	Yes	4,345	1,097	484	43	32	38	109	0	0
Partial	No	2,076	584	675	103	80	123	4	0	0
Total		10,017	3,979	3,837	1,067	499	587	207	62	23

TABLE 8—DISTRIBUTION OF FIRST 3 ROWS OF SIDE WINDOW EJECTED OCCUPANTS BY EJECTION ROW AND INJURY LEVEL BY EJECTION DEGREE AND BELT USE, AS A PERCENTAGE OF TOTALS AT EACH INJURY LEVEL, IN TARGET POPULATION TYPE CRASHES

Ejection degree	Belted	Row 1			Row 2			Row 3		
		MAIS 1–2	MAIS 3–5	Fatal	MAIS 1–2	MAIS 3–5	Fatal	MAIS 1–2	MAIS 3–5	Fatal
Complete	Yes	1%	1%	1%	1%	2%	0%	0%	0%	0%
Complete	No	31%	50%	59%	7%	7%	9%	1%	1%	1%
Partial	Yes	38%	24%	11%	0%	1%	1%	1%	0%	0%
Partial	No	18%	13%	15%	1%	2%	3%	0%	0%	0%
Total		87%	89%	88%	86%	9%	11%	13%	2%	1%

Table 9 shows the ejection degree and vehicle type for occupants in the first three rows of target population type crashes. The greatest numbers of fatalities result from occupants completely ejected from passenger cars. These account for 28 percent of the total fatalities.

Combining partial and complete ejections, cars account for 43 percent of fatalities and 42 percent of MAIS 3 to 5 injuries. Pickup trucks and sport utility vehicles (SUVs) combined account for 50 percent of fatalities and 54 percent of MAIS 3 to 5 injuries. Since the early 1990s, the SUV segment has provided an increasing proportion of rollover fatalities. SUVs represented approximately 16 percent of fatalities in 1997, and nearly 27 percent in 2008. Vans comprise 7 percent of the fatalities and 4 percent of the MAIS 3–5 ejections.

TABLE 9—DISTRIBUTION OF FATALITIES AND INJURIES OF FIRST 3 ROWS SIDE WINDOW EJECTED OCCUPANTS BY VEHICLE TYPE

[Annualized 1997—2008 NASS and FARS]

	Vehicle	MAIS 1–2	MAIS 3–5	Fatal	MAIS 1–2	MAIS 3–5	Fatal
Complete Ejections	Car	1,158	928	1,239	10%	20%	28%
	PU	1,236	812	793	11%	18%	18%
	SUV	1,881	858	907	17%	19%	20%
	Van	324	147	188	3%	3%	4%
	Other	12	2	0	0%	0%	0%
	Subtotal	4,612	2,747	3,127	41%	61%	70%

TABLE 9—DISTRIBUTION OF FATALITIES AND INJURIES OF FIRST 3 ROWS SIDE WINDOW EJECTED OCCUPANTS BY VEHICLE TYPE—Continued

[Annualized 1997—2008 NASS and FARS]

	Vehicle	MAIS 1–2	MAIS 3–5	Fatal	MAIS 1–2	MAIS 3–5	Fatal
Partial Ejections	Car	1,429	971	660	13%	21%	15%
	PU	2,515	375	190	22%	8%	4%
	SUV	1,590	402	350	14%	9%	8%
	Van	1,133	44	103	10%	1%	2%
	Other	13	0	17	0%	0%	0%
	Subtotal	6,680	1,793	1,320	59%	39%	30%
Total Ejections	Car	2,588	1,899	1,899	23%	42%	43%
	PU	3,750	1,187	983	33%	26%	22%
	SUV	3,471	1,260	1,257	31%	28%	28%
	Van	1,457	192	291	13%	4%	7%
	Other	25	2	17	0%	0%	0%
	Total	11,292	4,540	4,447	100%	100%	100%

In summary, for the most part, the target population for this ejection mitigation final rule is composed of occupants injured or killed in an ejection from the first three rows of side windows in vehicles to which the standard applies. The target population does not include the population addressed by the Phase 1 FMVSS No. 214 rulemaking, and does not include persons benefited by the installation of ESC systems in vehicles. (We assume that all model year 2011 vehicles and thereafter will be equipped with ESC, see FMVSS No. 126.) As adjusted for ESC, the target population for this ejection mitigation rulemaking is reduced to 1,392 fatalities, 1,410 MAIS 3–5 injuries and 4,217 MAIS 1–2 injuries. This target population constitutes 23 percent of fatally-injured occupants ejected through a side window, 27 percent of MAIS 3–5 injured, and 23 percent of MAIS 1–2 injured side window-ejected occupants.[14]

III. Congressional Mandate

This final rule responds to section 10301 of SAFETEA–LU, which requires the Secretary of Transportation to issue an ejection mitigation final rule reducing complete and partial ejections of occupants from outboard seating positions. Section 10301 amended Subchapter II of chapter 301 (49 U.S.C. Chapter 301, National Traffic and Motor Vehicle Safety Act) ("Vehicle Safety Act") to add section 30128. Section 10301, paragraph (a), directs the Secretary to initiate rulemaking proceedings, for the purpose of establishing rules or standards that will reduce vehicle rollover crashes and mitigate deaths and injuries associated with such crashes for motor vehicles with a GVWR of not more than 10,000 pounds. Paragraph (c) directs the Secretary to initiate a rulemaking proceeding to establish performance standards to reduce complete and partial ejections of vehicle occupants from outboard seating positions and that, in formulating the standards, the Secretary shall consider various ejection mitigation systems.[15]

NHTSA's final rule fulfills the statutory mandate of section 10301 of SAFETEA–LU to issue an ejection mitigation final rule reducing complete and partial ejections of occupants from outboard seating positions. We have considered various ejection mitigation systems, including advanced glazing,[16] and have made appropriate decisions based on that analysis. At the time of its implementation this final rule will reduce fatality ejected occupants by about one third[17] and completes a decisive stage in the agency's rollover crashworthiness program.

A few glazing manufacturers, a glazing manufacturers' association, and two consumer groups expressed a view in their comments to the NPRM that the rulemaking will fall short of the statutory mandate unless the final rule ensured that windows will not allow any openings larger than two inches to form during a rollover event (as a consequence, such a requirement would encourage the use of advanced glazing). These commenters also believed that SAFETEA–LU directed NHTSA to address ejections through sun roofs, moon roofs,[18] and rear windows in this standard. We address these comments in detail in later sections of this preamble.

With regard to the general assertion that this rulemaking does not meet SAFETEA–LU, we cannot agree. As part and parcel of good governance, all safety standards must be reasonable and appropriate. In addition, in adding section 30128 to the Vehicle Safety Act, SAFETEA–LU specifically requires us to issue an ejection mitigation final rule in accordance with the criteria of that Act. The Vehicle Safety Act requires each motor vehicle safety standard to be practicable, meet the need for motor vehicle safety, and be stated in objective terms. (49 U.S.C. 30111(a).) We must also consider whether the standard is reasonable, practicable, and appropriate for the particular type of motor vehicle or motor vehicle equipment for which it is prescribed. (49 U.S.C. 30111(b)(3).)

This final rule requires protective barriers at side windows, the ejection

[14] When discussing the target population in this preamble, we will typically mean the pre-ESC adjusted values. We will specifically state when we are referring to an ESC-adjusted target population.

[15] Paragraph (c) states that the Secretary shall issue a final rule under this paragraph by October 1, 2009. Paragraph (e) states that if the Secretary determines that the subject final rule deadline cannot be met, the Secretary shall notify and provide explanation to the Senate Committee on Commerce, Science, and Transportation and the House of Representatives Committee on Energy and Commerce of the delay. On September 24, 2009, the Secretary notified Congress that the final rule will be delayed until January 31, 2011.

[16] One type of advanced glazing systems, usually referred to as laminated glazing, has a multi-layer construction typically with three primary layers. There is usually a plastic laminate bonded between two pieces of glass. Advanced glazing was considered in the 1990s to have potential for use in ejection mitigation.

[17] This fatality reduction does not double-count benefits from ESC and the recent FMVSS No. 214 upgrade.

[18] For this document, we refer to movable and fixed roof panels made of glazing as "moon roofs" and movable panels having a sheet metal exterior as "sun roofs." We refer to both as roof portals.

portals through which 62 percent of occupants are fatally ejected in all crash types. We did not adopt the suggestions in the comments of the glazing manufacturers that could have bolstered increased use of advanced glazing in side windows because we did not find a safety need supporting the approaches. For back windows (backlight) and roof portals, we found that not enough was known to appropriately evaluate the costs, benefits and practicability of the requirements, at this time, including the lack of a viable test procedure. (Fatal ejections through the back light and roof portals account for 4.8 and 3.9 percent of fatal ejections in all crash types.) An appropriate test procedure that would assess ejection potential through portals on the vehicle's roof is also unknown.

In formulating this final rule, NHTSA considered various ejection mitigation systems in accordance with section 10301 of SAFETEA–LU. We sought to adopt performance measures that were design-neutral and performance-oriented so as to provide substantial flexibility to vehicle manufacturers in developing or enhancing ejection mitigation countermeasures that meet the requirements of the standard. To illustrate, the headform test procedure was originally developed in the advanced glazing research program and can be used to assess the performance of many different types of countermeasures at the side windows. The final rule recognizes the beneficial effect advanced glazing can have and permits the use of fixed glazing to achieve the performance criteria specified in the standard. At the same time, however, NHTSA determined after considering real-world field data on advanced glazing that movable advanced glazing alone would not be a satisfactory ejection mitigation countermeasure for side window openings, given that 31 percent of front seat ejections are through windows that were partially or fully rolled down, and given that it is not unusual for advanced glazing to be heavily damaged and rendered ineffective in a rollover crash. Accordingly, the standard does not permit use of movable glazing alone to meet the requirements of the standard. Movable glazing may be used in the high speed test, but it must be used in conjunction with a deployable safety system that will mitigate ejection throughout the stages of a rollover event, such as an ejection mitigation side curtain air bag.

In directing us to consider various ejection mitigation systems, there is indication that Congress envisioned us focusing on ejections through side windows. At the time of enactment of SAFETEA–LU, Congress was aware of the agency's past work on advanced side glazing and of our ejection mitigation research program. Congress was aware that side curtain air bags were showing strong potential as an ejection mitigation countermeasure and that we had redirected research and rulemaking efforts from advanced side glazing to developing performance-based test procedures for an ejection mitigation standard.[19]

In addition, in the legislative history on section 10301, section 7251 of the Senate bill which the Conference committee adopted (Conference Report of the Committee of Conference on H.R. 3, Report 109–203, 109th Congress, 1st Session) directed the Secretary to include consideration of "advanced *side* glazing, *side* air curtains, and *side* impact air bags" (emphases added) in establishing the standard. We believe that Congress wanted us to take into account the knowledge gained from our past work on side ejections in formulating this standard, which we have, building on our knowledge gained from the advanced side glazing and rollover crashworthiness programs.

It would take a longer time than the timeframe allowed by SAFETEA–LU to address fatal ejections through the back light and roof portals. In contrast to the side window research program, which started in the early 1990s, the agency had no research and development foundation upon which requirements for the back light and roof portal could be based. Much is unknown regarding a test procedure, effectiveness of current designs, method of anchoring advanced glazing to the backlight frame and roof portal, and possible other countermeasures and their costs. The agency believed that Congress intended us to build on the knowledge already attained and issue this final rule addressing side window ejections, which account for 62 percent of all fatal occupant ejections in all crashes, as quickly as possible, rather than delay this final rule to venture into areas that account for 8.7 percent of those fatal ejections.

In sum, we developed this final rule to meet the criteria of section 10301 of SAFETEA–LU and the Vehicle Safety Act, making sure that it is a performance standard that reduces complete and partial ejections from outboard seating positions and that it is reasonable, practicable, and appropriate, that it meets the need for safety and is stated in objective terms. Further, ensuring that the final rule is consistent with Executive Order 12866, we have adopted requirements that not only maximize the benefits of a cost-effective approach to ejection mitigation, but do so with an approach that saves over 370 lives. This final rule wholly implements the instructions of our statutory and administrative directives.

IV. Summary of the NPRM

NHTSA issued a proposal for a new FMVSS No. 226 and proposed the standard apply to passenger cars, multipurpose passenger vehicles, trucks and buses with a GVWR of 4,536 kg or less. We proposed that the side windows next to the first three rows of seats be subject to performance requirements requiring the vehicle to have an ejection mitigation countermeasure that would prevent an 18 kg (40 lb) headform from moving more than 100 mm (4 inches) beyond the zero displacement plane of each window when the window is impacted. Each side window would be impacted at up to four locations around its perimeter at two energy levels and time intervals following deployment. The first impact was proposed to be at 24 km/h, 1.5 seconds after deployment of the ejection mitigation side curtain air bag, assuming there was one present ("24 km/h-1.5 second test"), and the second impact was proposed to be at 16 km/h, at 6 seconds after deployment ("16 km/h-6 second test"). The NPRM proposed to allow windows of advanced glazing to be in position during the test, but pre-broken, using a prescribed method, to reproduce the state of glazing in an actual rollover crash.

The NPRM discussed proposals for: (a) The impactor dimensions and mass; (b) the displacement limit; (c) impactor speed and time of impact; and (d) target locations. We also discussed: (e) glazing issues; (f) test procedure tolerances; (g) test device characteristics; and other issues, such as a requirement for a readiness indicator.

The NPRM did not specifically require a rollover sensor to deploy the curtains or attributes that the sensor must meet; manufacturers currently provide sensors with their ejection mitigation curtains and NHTSA believed they will continue to provide a sensor enabling deployment regardless of an express requirement to do so. With regard to applicability, the agency tentatively decided in the NPRM not to exclude convertibles but requested comments on this issue and on the applicability of the standard to other

[19] "Ejection Mitigation Using Advanced Glazing, Final Report," NHTSA, August 2001, Docket 1782–22. See also, NHTSA's termination of an advance notice of proposed rulemaking on advanced glazing (67 FR 41365, June 18, 2002), *infra*.

types of vehicles, *e.g.,* police vehicles with security partitions.

Except for limited line and multistage manufacturers, the proposed lead time was the first September 1 three years from the date of publication of a final rule. The requirements were proposed to be phased in over a four-year period, with 20 percent of each manufacturer's vehicles manufactured during the first production year required to meet the standard, 40 percent manufactured during the second year required to meet the standard, 75 percent of vehicles manufactured during the third year required to meet the standard, and all vehicles (without use of advanced credits) manufactured on or after the fourth year required to meet the standard. It was proposed that limited line and multistage manufacturers would not have to achieve full compliance until one year after the phase-in is completed.

Accompanying the NPRM was a Preliminary Regulatory Impact Analysis (PRIA) analyzing the potential impacts of the proposed ejection mitigation requirements, and a technical analysis prepared by the agency that presented a detailed analysis of engineering studies, and other information supporting the NPRM ("Technical Analysis in Support of a Notice of Proposed Rulemaking Ejection Mitigation"). Both documents were placed in the docket for the NPRM (Docket No. NHTSA–2009–0183).

V. Summary of the Comments

NHTSA received 35 comments on the NPRM. Comments were received from motor vehicle manufacturers through their associations and individually, from air bag and glazing equipment suppliers (also through their associations and individually), and from consumer and insurance groups, and individuals.

The Alliance of Automobile Manufacturers (Alliance) [20] stated that it was generally supportive of many aspects of the NPRM, such as the use of a linear headform impactor for evaluating rollover deployed side curtains and the decision not to specify a protocol for testing rollover sensors. However, the commenter disagreed with the proposed performance requirements, believing that they are overly stringent and may unnecessarily force the development of air bag systems that could have adverse unintended consequences. The commenter stated that seat belt use is the most effective countermeasure for ejection mitigation. The Alliance stated its belief that there should be only one test at 16 km/h and at 3.4 seconds, with an excursion limit of 150 mm measured from a plane tangent to the exterior of the vehicle. The Alliance also stated its belief that the standard should not apply to convertibles and to vehicles with partitions, for practicability reasons. Further, the commenter asked for an additional year of lead time, and that vehicles with a GVWR greater than 2,722 kg (6,000 lb) should have a compliance date that is one year after the 100 percent phase-in date for completed vehicles with a GVWR of 2,722 kg or less. The Alliance also had technical comments on specific aspects of the test procedure.

The Alliance's member companies commenting on the NPRM reiterated the views of the Alliance, with some expounding on the following matters of particular interest to them. General Motors (GM) stated that the Alliance's suggested compliance date and phase-in schedule could be met assuming that NHTSA adopts the modifications of the test procedure identified by the Alliance and excludes convertibles and vehicles with partitions. Ford commented that side glazing retention in real-world rollover crashes is random and unpredictable and expressed the belief that FMVSS No. 226 should be focused on rollover-activated side curtain technology because these devices are designed to deploy regardless of side glazing status in a rollover (*e.g.,* retained, up, down or partially open) or construction of the glazing. Mercedes raised concerns about the difficulties larger vans such as the Sprinter would have in meeting the requirements and asked for additional lead time for vehicles over 8,500 lb GVWR. Porsche discussed the long lifecycles for its sports cars and asked that manufacturers be allowed to use credits earned for early compliance through the end of the 100 percent phase-in year. Various manufacturers expressed technical views or had questions about specific aspects of the test procedure.

The Association of International Automobile Manufacturers Technical Affairs Committee [21] (AIAM) stated that it "supports the agency's basic approach in the proposed ejection mitigation standard" but is "concerned that there may be unintended consequences if test criteria establish unnecessary high levels of energy for the test impactor." AIAM said that high test impact speeds could require the use of stiffer side curtain air bags or advanced glazing of increased rigidity to meet the specified displacement limit. "Such consequences may increase the risk of head/neck injuries." AIAM urged the agency to consider whether the impactor energy specifications may be reduced to a level equivalent to 180 Nm (corresponding to a 16 km/h test). The commenter believed that convertibles should be excluded from the standard for practicability reasons and also suggested that certain classes of vehicle could be excluded from the high speed requirement due to vehicle characteristics that can dissipate the energy of occupants in rollovers, such as vehicles having high "belt-lines" (*e.g.,* sports cars that seat the occupants low relative to the window openings). AIAM asked for an additional year of lead time prior to the start of the phase-in period and asked that advanced credits be allowed to meet the 100 percent stage of the phase-in. AIAM also commented on specific aspects of the test procedure and supported GM's suggested procedure for measuring impactor displacement from a plane tangent to the vehicle's exterior.

AIAM members commenting on the NPRM generally reiterated AIAM's views, with some separately raising issues of individual concern. Honda stated its belief that with an energy level of 200 joules (J), occupant ejection mitigation can be balanced with occupant protection without unintended adverse consequences to occupant protection. The commenter suggested the test procedure consist of one test at 17 km/h with a 3.0 second time delay. Honda agreed with the proposed 100 mm displacement limit, but suggested that displacement along a line normal to the actual window at the center of each target impact point should not exceed 100 mm. Nissan suggested the agency adopt a 20 km/h test instead of the proposed 24 km/h test. In their individual comments, various vehicle manufacturers asked for clarification of or changes to particular aspects of the proposed test procedure.

Organizations representing specialized manufacturers commented on the NPRM. Vehicle Services Consulting, Inc. (VSC) [22] supported the

[20] The Alliance member companies are BMW Group, Chrysler Group, Ford Motor Company, General Motors, Jaguar Land Rover, Mazda, Mercedes-Benz USA, Mitsubishi Motors, Porsche, Toyota, and Volkswagen (VW).

[21] AIAM Technical Affairs Committee members are American Honda Motor Company (Honda), American Suzuki Motor Corp., Aston Martin Lagonda of North America, Ferrari North America, Hyundai Motor America (Hyundai), Isuzu Motor America, Kia Motors America, Maserati North America, Nissan North America, Peugeot Motors of America, Subaru of America, ADVICS North America, Delphi Corporation, Denso International America, and Robert Bosch Corporation.

[22] VSC states: "Vehicle Services Consulting, Inc. assists numerous small volume vehicle manufacturers with US certification-related matters."

NPRM, but asked that convertibles be excluded from the standard. VSC also asked for clarification of regulatory text applying to small volume manufacturers. The National Truck Equipment Association (NTEA) [23] requested that NHTSA exclude from the ejection mitigation standard work trucks built in two or more stages, particularly those with partitions, and vehicles with alterations to the floor height.

Air bag supplier groups commented in favor of the NPRM. Takata Corporation, a manufacturer of air bags and other motor vehicle equipment, stated that it supports NHTSA's goal to establish a new FMVSS to reduce the partial and complete ejection of occupants in rollover crashes.[24] However, Takata expressed concern about the effectiveness of applying the ejection mitigation standard to convertibles at this time. TRW, a manufacturer of vehicle safety systems, and the Automotive Occupant Restraints Council (AORC) [25] supported the agency's proposal in general, but suggested that all windows should be tested down or removed regardless of whether the glazing is laminated since motorists occasionally drive with their windows open. TRW and AORC also expressed concern about applying the ejection mitigation requirements to convertibles. Each of these commenters had detailed feedback on and suggestions for improving the proposed test procedures.

Glazing manufacturers and suppliers commenting on the NPRM generally supported the objectives and overall structure of the proposed standard, but a number had the view that the agency fell short of the congressional mandate of section 10301 of SAFETEA–LU, in that roof glazing and backlight areas were not being regulated by the new standard. Many of these groups also desired a reduction in the performance limit, some by 50 percent (i.e., a displacement limit of 50 mm). Many of the groups commented that all windows should be tested in the up (closed) position and several objected to the pre-test breaking procedure for glazing as being excessive and suggested changes to it, such as eliminating the specification to pre-break the interior surface of the glazing. Many of these glazing supplier groups requested a shorter lead time and phase-in period.

Consumer groups Public Citizen (PC) and Advocates for Highway and Auto Safety (Advocates) commented on the NPRM. PC stated that the NPRM is flawed because it does not address occupant ejections through the roof and because the cost-benefit analysis is "devised with the same misleading approach to determining a target population that NHTSA has used in other rollover rulemakings." PC suggested NHTSA establish a performance requirement that would encourage the dual use of laminated glazing and side curtain air bags, but stated that NHTSA should not permit laminated glazing in vehicles not equipped with side curtain air bags. PC suggested that the phase-in schedule should begin and end one model year earlier than proposed. The commenter also was critical that "the agency has not taken a comprehensive, whole vehicle approach to reducing fatalities in rollover crashes."

Advocates stated its belief that NHTSA interpreted SAFETEA–LU too narrowly by addressing occupant ejection only through side windows and not through side doors, tailgates, windshields, backlights, or sun roofs. Advocates suggested that roofs can be strengthened and occupant ejection reduced through the use of advanced glazing and that NHTSA should promote pre-crash automated window closure to ensure that vehicles with advanced glazing would be in the windows-up position. Advocates supported "mandatory anti-ejection countermeasures to be applied at all designated seating positions, not just for outboard occupants in the first, second, and third rows," including all occupant positions in the rear seats of 15-passenger vans. Advocates believed that the 100 mm proposed displacement limit should be 50 mm and that areas outside of the target zones should be tested. The commenter was concerned about the proposed time intervals for the impactor tests [26] and desired performance requirements for rollover air curtain sensors. The commenter believed that manufacturers would only need a two-year lead time and a three-year phase-in period to meet the proposed requirements.

The Insurance Institute for Highway Safety (IIHS) said it supported the NPRM because the commenter believed that the rulemaking is likely to result in all passenger vehicles being equipped with side curtain air bags that deploy in rollover crashes. However, IIHS stated that the proposed 100 mm excursion limit may be overly restrictive. IIHS also stated that the agency should provide an incentive to manufacturers to equip vehicles with laminated side glazing.

Several individuals responded in general support of the NPRM and with several suggestions. National Forensic Engineers, Inc. supported the use of laminated glazing in side windows to supplement side curtain air bags. Stephen Batzer and Mariusz Ziejewski, and Byron Bloch, stated that the standard should apply to vehicles above 4,536 kg, to daylight openings adjacent to every designated seating position and to the windshield, sunroof and backlight, and supported the use of laminated glazing. Batzer and Ziejewski believed that a 10 mph impact would be sufficient. Bloch urged the agency to evaluate ejection mitigation through a dynamic full vehicle rollover test.

VI. How the Final Rule Differs From the NPRM

The more important changes from the NPRM are listed in this section and explained in detail later in this preamble. Changes more minor in significance (*e.g.,* changes that clarify test procedures) are not listed below but are discussed in the appropriate sections of this preamble.

i. The high speed impact test, performed at 1.5 seconds after ejection mitigation side curtain air bag deployment, will have an impact velocity of 20 km/h instead of 24 km/h. After evaluating the comments to the NPRM, the agency reanalyzed the test data upon which the impact speed proposed in the NPRM was based, analyzed the new testing conducted since the NPRM, and considered all submitted information. Based on this analysis, we agree to decrease the impact test speed to 20 km/h, as suggested by Nissan in its comment, which results in 278 joules (J) of impact energy. This energy value is well supported and more representative of the energy the ejection countermeasure will typically be exposed to in the field, particularly in rollovers. All target locations in each window opening will be subject to the high speed test, performed at 1.5 seconds after ejection mitigation side curtain air bag deployment ("20 km/h-1.5 second test"), and to the low speed 16 km/h test

[23] NTEA describes itself as a "trade association representing distributors and manufacturers of multi-stage produced, work related trucks, truck bodies and equipment."

[24] Takata also submitted information to NHTSA's ejection mitigation research docket (NHTSA–2006–26467) indicating that meeting the proposed performance requirements in non-convertibles would be practicable.

[25] AORC describes itself as a non-profit organization whose mission is to promote automotive safety through education and technology. Its membership consists of safety system manufacturers and their suppliers.

[26] Advocates was concerned that "no sustained inflation is tested between the 1.5 and 6 second tests, when excursion could exceed the 4 inch maximum required by the proposed standard."

performed 6 seconds after deployment ("16 km/h-6 second test").

ii. If necessary, the headform and targets will be rotated by 90 degrees to a horizontal orientation if this results in more impact locations than the vertical orientation (to a maximum of four target locations). For long narrow windows, popular in many late model vehicles, very limited target coverage of the opening is achieved if the target is kept in the vertical orientation. It did not make sense to exclude windows from being subject to full ejection mitigation protection simply because the headform could not fit when oriented vertically.

iii. The standard does not permit the use of movable advanced glazing as the sole means of meeting the displacement limit of the standard. In addition, the 16 km/h-6 second test must be performed without the use of advanced glazing for movable windows. Field data indicates that even when initially up, movable advanced glazing may be destroyed and made ineffective as a countermeasure beyond the initial phase of a rollover. Therefore, the final rule will require that if a vehicle has movable advanced glazing as part of the ejection countermeasure, the 16 km/h-6 second test will be performed with the glazing retracted or removed from the window opening. This approach will assure a reasonable level of safety when side glazing is rolled down or when the severity of the rollover damages or destroys the effectiveness of the glazing, and still encourages the use of advanced glazing as a countermeasure to supplement the vehicle's performance in meeting the 20 km/h-1.5 second test.

iv. The window opening for cargo areas behind the 1st and 2nd row will be impacted. If there is a side window opening in a cargo area behind the 1st row of a single row vehicle or behind the 2nd row of a two-row vehicle, this final rule will extend coverage to those cargo areas behind the 1st and 2nd rows of vehicles. The area of side window openings in a cargo area will be bounded by a transverse plane 1,400 mm behind the seating reference point (SgRP) of the rearmost seat in the 1st row of a single row vehicle or behind the SgRP of the rearmost seat in the 2nd row of a two-row vehicle. Field data found that cargo area ejections behind a 2nd row were similar in frequency to 3rd row ejections. Such cargo area coverage is cost effective and is not any more challenging than 3rd row coverage.

v. Minor changes were made in the definition of and procedure for determining the window opening. The final rule increases the lateral distance defining the window opening from 50 to 100 mm. We have examined interior trim components, such as panels covering the vehicle pillars and found that relevant surfaces can be more than 50 mm from the inside of the window glazing and that these trim components can be difficult to remove.

vi. The final rule slightly modifies the glazing pre-breaking procedure by using a 75 mm offset pattern. (We disagree with the comments that stated the pre-breaking procedure should be deleted or should be restricted to four points on the glazing. We believe the pre-breaking procedure is necessary to recreate the damage that will likely occur in the field.)

vii. Convertibles are excluded from this standard. Also excluded are law enforcement vehicles, correctional institution vehicles, taxis and limousines with a fixed security partition separating the 1st and 2nd or 2nd and 3rd rows, if the vehicle is a multistage or altered vehicle.

viii. The final rule has a 2-year lead time period, with 25 percent of each manufacturer's vehicles manufactured during the first production year required to meet the standard, 50 percent manufactured during the second year required to meet the standard, 75 percent of vehicles manufactured during the third year required to meet the standard, and 100 percent of vehicles manufactured on or after the fourth year required to meet the standard. The final rule allows manufacturers to use advanced credits to meet the phase-in percentages, including advanced credits in the last year (100 percent year) of the phase-in schedule.

ix. Characteristics of the guided linear impactor with the 18 kg headform and the associated propulsion mechanism were refined to assure sufficient repeatability and reproducibility of the test. The impactor used in research tests was originally constructed in the advanced glazing program of the 1990s. We have reduced the maximum allowable dynamic coefficient of friction of the test device by a factor of 5, from 1.29 (old impactor) to 0.25 (new impactor). The device has been made less flexible along its shaft and thus better able to maintain its orientation as it interacts with ejection countermeasures.

VII. Foundations for This Rulemaking

This section discusses knowledge and insights we gained from past research on ejection mitigation safety systems which underlie many of the decisions we made in forming this final rule.

a. Advanced Glazing

In formulating this final rule, NHTSA considered various ejection mitigation systems in accordance with section 10301 of SAFETEA–LU. One of the considered systems was advanced side glazing. In the 1990s, NHTSA closely studied advanced glazing as a potential ejection mitigation countermeasure [27] but terminated an advance notice of proposed rulemaking on advanced glazing in 2002 (67 FR 41365, June 18, 2002). The termination was based on our observation that advanced glazing produced higher neck shear loads and neck moments than impacts into tempered [28] side glazing. In addition, the estimated incremental cost for installing ejection mitigation glazing in front side windows ranged from over $800 million to over $1.3 billion, based on light vehicle annual sales of 17 million units in the 2005–2006 timeframe. Also, because side curtain air bags were showing potential as an ejection mitigation countermeasure, NHTSA decided to redirect its research and rulemaking efforts toward developing performance-based test procedures for an ejection mitigation standard.[29]

Elements from the advanced glazing program underlie a substantial part of today's final rule. The headform and the test procedure were originally developed in the advanced glazing research program.

Further, as with all of the FMVSSs, we drafted this final rule to be performance-oriented, to provide manufacturers wide flexibility and opportunity for design innovation in developing countermeasures that could be used for ejection mitigation. We anticipate that manufacturers will install ejection mitigation side curtain air bags in response to this rulemaking, taking advantage of the side impact curtains already in vehicles. Nonetheless, this final rule provides a role for advanced glazing as a complement to ejection mitigation curtain systems.

[27] Ejection mitigation glazing systems have a multi-layer construction with three primary layers. There is usually a plastic laminate bonded between two pieces of glass.

[28] Tempered glass is made from a single piece of specially treated sheet, plate, or float glass possessing mechanical strength substantially higher than annealed glass. When broken at any point, the entire piece breaks into small pieces that have relatively dull edges as compared to those of broken pieces of annealed glass. (*See* FMVSS No. 205, "Glazing Materials," incorporating by reference standard ANSI/SAE Z26.1–1996.)

[29] "Ejection Mitigation Using Advanced Glazing, Final Report," NHTSA, August 2001, Docket No. NHTSA–1996–1782–22.

NHTSA tested several vehicles' ejection mitigation side curtain air bags both with and without advanced glazing to the 18 kg impactor performance test adopted by this final rule. In the tests, the glazing was pre-broken to simulate the likely condition of the glazing in a rollover. Tests of vehicles with advanced glazing resulted in a 51 mm average reduction in impactor displacement across target locations.[30] That is, optimum (least) displacement of the headform resulted from use of both an ejection mitigation window curtain and advanced glazing. To encourage manufacturers to enhance ejection mitigation curtains with advanced glazing, the final rule allows windows of advanced glazing to be in-position for the 20 km/h-1.5 second test, although pre-broken to reproduce the state of glazing in an actual rollover crash. This approach encourages advanced glazing as a countermeasure to supplement the vehicle's performance in meeting the 20 km/h-1.5 second test.[31]

b. Full Window Opening Coverage Is Key

We considered the findings of several NHTSA research programs on rollover crashworthiness protection in developing this final rule.

A cornerstone program started with the development of a dynamic rollover fixture (DRF) that could be used to produce full-dummy ejection kinematics in an open window condition, where the peak roll rate ranged between 330 to 360 degrees/second. The DRF was used to assess the potential effectiveness of ejection mitigation countermeasures in a rollover.[32] These countermeasures included several designs of inflatable curtain air bags, advanced glazing, and combinations of curtains and advanced glazing. The results of the assessment showed that not all ejection mitigation air bag curtains work the same way. We found that full window opening coverage was key to the effectiveness of the curtain in preventing ejection.

1. Tests with 50th Percentile Adult Male and 5th Percentile Adult Female Test Dummies

In the first research program, experimental roof rail-mounted inflatable devices developed by Simula Automotive Safety Devices (Simula) and by TRW were evaluated on the DRF, along with an advanced side glazing system.[33] In the tests, unrestrained 50th percentile male and 5th percentile female Hybrid III dummies, instrumented with 6 axis upper neck load cells and tri-axial accelerometers in the head, were separately placed in the buck.[34] The DRF rotation resulted in a centripetal acceleration of the dummy that caused the dummy to move outwards towards the side door/window. In baseline tests of the unrestrained dummies in the DRF with an open side window and no countermeasure, the dummies were fully ejected. The ability of the countermeasure to restrain the dummies could then be assessed and compared to that baseline test.

In the tests of the experimental inflatable devices, the air bags were pre-deployed and their inflation pressure was maintained throughout the test by the use of an air reservoir tank mounted on the platform.[35] In the tests, the dummy's upper body loaded the inflatable device, which limited the dummy's vertical movement toward the roof and caused the pelvis to load the side door throughout the roll, rather than to ride up the door. The inflatable devices contained the torso, head, and neck of the dummy, so complete ejection did not occur. However, both devices did allow partial ejection of the dummy's shoulder and arm below the bags, between the inflatable devices and the vehicle door.

In the test of the advanced side glazing (laminated with door/window frame modifications around the entire periphery to provide edge capture), the glazing contained the dummies entirely inside the test buck. The glazing was not pre-broken before the testing. There was some flexing of the window frame when the dummies loaded the glazing, and the 50th percentile male dummy's shoulder shattered the glass when the dummy was located behind the steering wheel.

In the test of the combined systems, the dummies remained entirely inside the buck. Although the dummy's shoulder and arm escaped under the inflatable devices, the advanced glazing prevented the partial ejection seen in tests of the inflatable devices alone.

In these tests, the ejection mitigation systems did not show a high potential for producing head and neck injury. However, head and neck loading were higher than the open window condition. The highest load with respect to the Injury Assessment Reference Values (IARVs) was 82 percent for the neck compression for the 5th percentile female tested with the Simula/laminate combination. The highest injury response for the 50th percentile male dummy was 59 percent for the neck compression with the TRW system alone. All HIC_{36}[36] responses were extremely low and ranged from 8 to 90, with the maximum occurring in an open window test. Lateral shear and bending moment of the neck were also measured, although there are no established IARVs. The maximum lateral neck shear loads were 950 N (50th percentile male tested with TRW

[30] See the technical analysis prepared by the agency in support of the NPRM, placed in the docket for the NPRM (NHTSA–2009–0183–007). "Technical Analysis in Support of a Notice of Proposed Rulemaking for Ejection Mitigation." Among other matters, the report discusses the results of NHTSA's impactor testing of OEM and prototype side window ejection mitigation systems.

[31] Yet, after reviewing comments to the NPRM and other information, we have decided not to permit movable glazing to supplement the primary ejection mitigation system in the 16 km/h-6 second test. This is because field data indicate that even when initially up, movable advanced glazing may be destroyed and rendered ineffective as an effective countermeasure beyond the initial phase of a rollover. In addition, 30 percent of occupants are ejected through windows that are partially or fully open prior to the crash.

[32] NHTSA developed the DRF to produce full-dummy ejection kinematics in a less costly manner than full-scale testing. The DRF models a lateral rollover crash of approximately one vehicle revolution. The DRF rotates approximately one revolution and comes to rest through the application of a pneumatic braking system on one end of the pivot axle. It does not simulate lateral vehicle accelerations often encountered in a rollover crash prior to initiation of the rollover event. The DRF has a test buck fabricated from a Chevrolet CK pickup cab. The cab is longitudinally divided down the center from the firewall to the B-pillar. The left (driver) side is rigidly attached to the test platform. The Chevrolet CK was chosen so that the advanced glazing systems developed in the previous ejection mitigation research could be evaluated in this program. A seat back and cushion were made from Teflon material, to minimize the shear forces on the dummy buttocks for more desired loading on the window area by the dummy's head and upper torso.

[33] "Status of NHTSA's Ejection Mitigation Research Program," Willke *et al.,* 18th International Technical Conference on the Enhanced Safety of Vehicles, paper number 342, June 2003.

[34] Two dummy positions were used. The first was behind the steering wheel. The second position was more inward, toward the pivot axle, which generated higher contact velocities. Film analysis was used to measure the dummy's relative head and shoulder contact velocity with the side window plane from these two seating positions. (For the final rule, we digitized the films and reanalyzed the impact speeds using data from state-of-the-art software. The resulting impacts speeds were lower than those reported in the NPRM. The analysis will be discussed later in this document.) From the first position behind the steering wheel, the shoulder impact speeds were 7.0 km/h (4.3 mph) for the 5th percentile female dummy and 9.0 km/h (5.6 mph) for the 50th male. From the second (inboard) position, the velocities were 15.5 km/h (9.6 mph) for the 5th female dummy and 15.8 km/h (9.8 mph) for the 50th male.

[35] Since these were experimental systems, they were not deployed through pyrotechnic or in-vehicle compressed gas, as might be the case with production designs. The air pressure supplied by the laboratory reservoir kept the systems fully inflated over the test period.

[36] HIC_{36} is the Head Injury Criterion computed over a 36 msec duration. HIC_{36} = 1,000 represents an onset of concussion and brain injury.

system) and 1020 N (5th percentile female tested with laminate only).

2. Tests With 6-Year-Old Child Test Dummy Showed a Risk of Ejection Through Openings Not Fully Covered

The second research program involved a series of tests on the DRF using an unrestrained Hybrid III 6-year-old dummy. In previous tests with the 50th percentile adult male and 5th percentile adult female dummies, a gap formed between the inflatable devices and the window sill (bottom of the window opening), which allowed partial ejection of those adult dummies. The second program investigated whether the gap allowed ejection of the 6-year-old child dummy.[37]

In baseline testing with an open side window without activation of an ejection mitigation countermeasure, the child dummy was fully ejected. In tests of the two inflatable systems tested in the first program (at the time of the second research program, the inflatable device formerly developed by Simula was then developed by Zodiac Automotive US (Zodiac)), the inflatable devices prevented full ejection of the 6-year-old child dummy in upright-seated positions (no booster seat was used). However, dummy loading on the systems produced gaps that did allow an arm and/or hand to pass through in some tests. Moreover, in a series of tests with the dummy lying in a prone position (the dummy was placed on its back at the height of the bottom of the window opening), representing a near worst-case ejection condition, the dummy was completely ejected at positions near the bottom of the inflatable devices (above the sill) with the TRW curtain, while the Zodiac system contained the dummy inside the test buck in all testing. Adding pre-broken advanced glazing with the TRW system managed to contain the dummy inside the test buck in all tests.[38]

3. Differences in Design Between the Two Inflatable Systems

The two prototype inflatable devices tested had fundamentally different designs. The Zodiac/Simula prototype system used an inflatable tubular structure (ITS)[39] tethered near the base of the A and B-pillars that deployed a woven material over the window opening. (The Zodiac system differed from the originally-tested Simula design in that it had more window coverage. This was achieved by placing the ITS tether locations lower on the pillars and adding additional woven material.) The TRW prototype was more akin to a typical air bag curtain and was fixed to the A- and B-pillar at its end points and along the roof rail, but not tethered. The ITS differed from conventional air bags in that it was not vented.

We believe that the better performance of the Zodiac prototype system compared to that of TRW, in the DRF testing described above and in impactor test results provided later in this preamble, was due to the greater window coverage by the Zodiac prototype along the entire sill and A-pillar.

4. Insights

The DRF research provided the following insights into ejection mitigation curtains:

- Inflatable devices prevented ejection of test dummies in simulated rollover tests, but design differences accounted for differences in performance;
- Gaps in the inflatable device's coverage of the window opening at the sill and A-pillar allowed partial ejection of adult dummies and full ejection of a 6-year-old child dummy;
- Adding pre-broken advanced glazing to an air bag system enhanced the ability of the system to contain the dummy; and,
- To optimize ejection mitigation potential, a performance test should ensure that the countermeasure has full coverage of the window opening.

c. Comparable Performance in Simulated Rollovers and Component-Level Impact Tests

Because full-vehicle rollover crash tests can have an undesired amount of variability in vehicle and occupant kinematics, in the advanced glazing program NHTSA developed a component-level impact test for assessing excursion and the risk of ejection. We use the component-level test in this final rule for ejection mitigation.

The test involves use of a guided linear impactor designed to replicate the loading of a 50th percentile male occupant's head and shoulder during ejection situations. The impactor[40] is described later in this preamble. There are many possible ways of delivering the impactor to the target location on the ejection mitigation countermeasure. The ejection mitigation test device[41] used by the agency in the advanced glazing program and for the research used to develop the NPRM ("old impactor") has a propulsion mechanism[42] with a pneumatic piston that pushes the shaft component of the impactor. The old impactor shaft slides along a plastic (polyethylene) bearing. The impactor has an 18 kg mass.

The component-level test identified four impact locations to evaluate a countermeasure's window coverage and retention capability. Two of the positions were located at the extreme corners of the window/frame and were located such that a 25 mm gap existed between the outermost perimeter of the headform and window frame. A third position was near the transition between the upper window frame edge and A-pillar edge. The fourth position was at the longitudinal midpoint between the third position and the position at the upper extreme corner of the window/door frame, such that the lowest edge of the headform was 25 mm above the surface of the door at the bottom of the window opening.

At each impact location, different impact speeds and different time delays between air bag deployment and impact were used. To simulate ejection early in a rollover event and in a side impact, the air bags were impacted 1.5 seconds after air bag deployment, at 20 and 24 km/h. To simulate ejection late in a rollover event, the air bags were impacted after a delay of 6 seconds at an impact speed of 16 km/h.

Findings

The two inflatable systems tested in the above-described research programs (the inflatable devices developed by Zodiac and by TRW) were installed on a Chevrolet CK pickup cab and subjected to the component-level impact test. The air bag systems were evaluated for allowable excursion (impactor displacement) beyond the side window plane. The tests also assessed the degree to which the component-level test was able to replicate the findings of the DRF tests.

The component-level tests mimicked the DRF tests by revealing the same deficiencies in the side curtain air bags that were highlighted in the dynamic test. On the other hand, the Zodiac

[37] "NHTSA's Crashworthiness Rollover Research Program," Summers, S., *et al.,* 19th International Technical Conference on the Enhanced Safety of Vehicles, paper number 05–0279, 2005.

[38] *Id.*

[39] ITS systems were originally introduced by BMW as a side impact countermeasure.

[40] The "ejection impactor" is the moving mass that strikes the ejection mitigation countermeasure. It consists of an ejection headform attached to a shaft.

[41] The ejection mitigation test device consists of an ejection impactor and ejection propulsion mechanism.

[42] The "ejection propulsion mechanism" is the component that propels the ejection impactor and constrains it to move along its axis or shaft.

system [43] did not allow the impactor to go beyond the plane of the window in the 16 km/h and 20 km/h tests. The air bag allowed only 12 and 19 mm of excursion beyond the window plane in the 24 km/h tests.

In the 24 km/h tests of the TRW system, the curtain was not able to stop the impactor before the limits of travel were reached (about 180 mm beyond the plane for the vehicle window for that test setup) at the position at the extreme forward corner of the window sill. This is the position at which the TRW prototype system allowed excessive excursion of the test dummies in the DRF dynamic tests. In the DRF tests, the 6-year-old dummy was completely ejected through that window area even when the prone dummy was aimed at the position at the other extreme corner of the window. In other tests, the TRW prototype system was able to stop the impactor before the impactor reached its physical stops.

d. Advantages of a Component Test Over a Full Vehicle Dynamic Test

NHTSA determined that the component test not only distinguishes between acceptable and unacceptable performance in side curtain air bags, but has advantages over a full vehicle dynamic test. The acceptable (or poor) performance in the laboratory test correlated to the acceptable (or poor) performance in the dynamic test. The component test was able to reveal deficiencies in window coverage of ejection mitigation curtains that resulted in partial or full ejections in dynamic conditions. Incorporating the component test into an ejection mitigation standard ensures that ejection mitigation countermeasures provide sufficient coverage of the window opening for as long in the crash event as the risk of ejection exists, which is a key component contributing to the efficacy of the system.

As noted earlier, rollover crash tests can have an undesirable amount of variability in vehicle and occupant kinematics. In contrast, the repeatability of the component test has been shown to be good.[44] Moreover, there are many types of rollover crashes, and within each crash type the vehicle speed and other parameters can vary widely. A curb trip can be a very fast event with a relatively high lateral acceleration. Soil and gravel trips have lower lateral accelerations than a curb trip and lower initial roll rates. Fall-over rollovers are the longest duration events, and it can be difficult to distinguish between rollover and non-rollover events. Viano and Parenteau [45] correlated eight different tests to six rollover definitions from NASS–CDS.[46] Their analysis indicated that the types of rollovers occurring in the real-world varied significantly. Soil trip rollovers accounted for more than 47 percent of the rollovers in the field, while less than 1 percent of real-world rollovers were represented by the FMVSS No. 208 Dolly test ("208 Dolly test").

Occupant kinematics will also vary with these crash types, resulting in different probabilities of occupant contact on certain areas of the side window opening with differing impact energies. A single full vehicle rollover test could narrowly focus on only certain types of rollover crashes occurring in the field.[47] Assuming it is at all possible to comprehensively assess ejection mitigation countermeasures through full vehicle dynamic testing, multiple crash scenarios would have to be involved.

Such a suite of tests imposes test burdens and costs that could be avoided by a component test, such as that adopted today. We also note that a comprehensive suite of full-vehicle dynamic tests would involve many more years of research, which would delay this rulemaking action and the implementation of life-saving curtain air bag technologies. Such a delay is unwarranted and undesirable since the component test will be an effective means of determining the acceptability of ejection countermeasures.

VIII. Availability of Side Curtain Air Bags

The availability of vehicles that offer inflatable side curtains that deploy in a rollover has increased since they first became available in 2002. In the middle of the 2002 model year (MY), Ford introduced the first generation of side curtain air bags that were designed to deploy in the event of a rollover crash. The rollover air bag curtain system, marketed as a "Safety Canopy," was introduced as an option on the Ford Explorer and Mercury Mountaineer.[48] For the 2007 MY, rollover sensors were available on approximately 95 models, with 75 of these models being sport utility vehicles. The system was standard equipment on 62 vehicles (65 percent) and optional on 33 vehicles (35 percent).

Annually, as part of NHTSA's New Car Assessment Program (NCAP), the agency sends a questionnaire to manufacturers requesting information about the availability of certain safety systems on their vehicles.[49] Since 2008, NHTSA has asked manufacturers for voluntary responses regarding whether their available side impact curtains will deploy in a rollover crash. The voluntary responses were in the affirmative for 39 percent of MY 2008 make models and for 43 percent of MY 2010 make models.

IX. Existing Curtains

Aside from the presence of a rollover sensor, there are two important design differences between air bag curtains designed for rollover ejection mitigation and air bag curtains designed only for side impact protection. The first difference is longer inflation duration. Rollover crashes with multiple full vehicle rotations can last many seconds. Ford has stated that its Safety Canopy stays inflated for 6 seconds,[50] while GM stated that its side curtain air bags designed for rollover protection maintain 80 percent inflation pressure for 5 seconds.[51] Honda stated that the side curtains on the 2005 and later Honda Odyssey stay fully inflated for 3 seconds.[52] In contrast, side impact air bag curtains designed for occupant protection in side crashes, generally stay inflated for less than 0.1 seconds.

The second important air bag curtain design difference between rollover and side impact protection is the size or coverage of the air bag curtain. One of the most obvious trends in newer vehicles is the increasing area of coverage for rollover curtains. Referring to earlier generations of curtains, Ford has stated that its rollover protection air bags covered between 66 and 80 percent

[43] Testing was restricted to the extreme corners of the window due to limited availability of this system.

[44] "NHTSA's Crashworthiness Rollover Research Program," *supra.*

[45] Viano D, Parenteau C. Rollover Crash Sensing and Safety Overview. SAE 2004–01–0342.

[46] "Technical Analysis in Support of a Notice of Proposed Rulemaking for Ejection Mitigation," *supra.*

[47] The agency has in the past performed dolly type dynamic testing. The agency has not performed enough repeat tests of the same vehicles to draw any conclusions about the repeatability of these tests to determine occupant containment. However, regardless of the level of repeatability of dummy kinematics, it still only represents a part of the kinematics that would occur in the field.

[48] *http://media.ford.com/article_display.cfm?article_id=6447* (Last accessed October 8, 2010.)

[49] The total number of make/models represented in the survey is about 500. Slight model variations are represented as different models and corporate twins are not combined.

[50] Ibid.

[51] "Who Benefits From Side and Head Airbags?" (*http://www.edmunds.com/ownership/safety/articles/105563/article.html*). (Last accessed October 5, 2010.)

[52] *http://www.autodeadline.com/detail?source=Honda&mid=HON20040831726 78&mime=ASC.* (Last accessed October 5, 2010.)

of the first two rows of windows, and that it was expanding the designs so they cover all three rows in all models.[53] GM stated that its curtains designed for rollover protection are larger than non-rollover curtains.[54]

a. Existing Curtains Tested to Proposed Requirements

The agency presented data in the NPRM from testing of eight MY 2003 through MY 2006 vehicles. Since the date of publication of the NPRM, the agency tested 16 vehicle models to the proposed ejection mitigation requirements. Data from these tests supplement the data from tests of eight MY 2003 through MY 2006 vehicles discussed in the NPRM and are discussed in this section. Most of the testing of the 16 vehicle models was with the old impactor used in the NPRM tests. Tests from three vehicles were performed with a new test device ("new impactor"). To date we have performed nearly 700 impacts.

Figure 1 shows the target location key for the test results. In the data, the C1–C4 targets follow the same positioning as the B1–B4 targets. In a few instances, the A2 and A3 targets were eliminated because they were too close and a target (A5) was placed back in the window because the centers of remaining targets A1 and A4 were more than 360 mm apart.

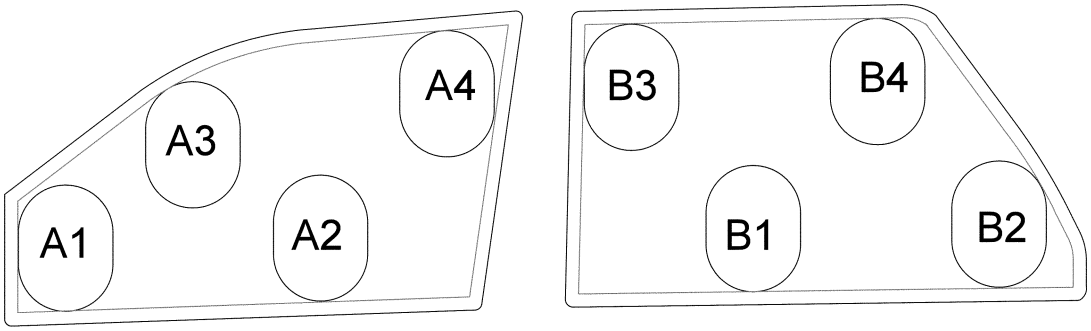

Figure 1 – Target Location Determined by Proposed Method

General Results

The results of the agency testing are given in Tables 10 through 18, below. The results are given in columns, by target location and are in units of millimeters. (The technical report accompanying this document has the data color-coded. Values exceeding the proposed 100 mm limit of impactor displacement are in red or the darkest shading. Results from 80 to 100 mm of displacement are purple or medium shading. Results which are less than 80 mm are in green or the lightest shading.) Some cells contain the average from several tests under the same/similar conditions; these results are bolded. In some tests there was so little resistance to the impactor that it continued past the countermeasure to the point where the internal limit of the impact prevented any additional displacement. In these cases, the numerical value of displacement has no meaning so the cell is denoted as "To Stops."

On occasion, target locations were not tested at 24 km/h because the 20 km/h results indicated displacements in excess of 100 mm at that location. These cells are denoted by "(20 km/h)" and we assume the 24 km/h impact would also have exceeded 100 mm. Similarly, some target locations were not tested at 20 km/h, but the cells contain "(24 km/h)" indicating a value below 80 mm of displacement in the 24 km/h test and we assume the 20 km/h impact would have resulted in a displacement less than 80 mm.

As detailed later, some vehicles were tested with pre-broken advanced laminated (designated as "w/lam." next to the vehicle name). Various breaking methods were used. For simplicity in presenting the data, we have averaged the results for various breaking methods, except for the method of breaking the laminated in four places (designated as "4 hole" next to the vehicle name). Also, a few tests were performed with the headliner in place (designated as "w/liner" next to the vehicle name). "N/O" refers to whether the test was conducted with the old "O" or new "N" impactor.

Across all vehicles, as was the case with our previous analysis of test data in the NPRM, target A1 remains the most challenging impact location and A4 the least challenging for the 1st row. This is consistent for all three impactor speeds and time delays. For the 2nd row, B1 and B2 are the most challenging. The available data do not present a clear trend for the 3rd row.

The two best performing vehicles were the MY 2007 Mazda CX9 and the MY 2008 Toyota Highlander. We will discuss the performance of these vehicles in more detail in several of the sections below.

TABLE 10—FRONT ROW WINDOW, 24 KM/H IMPACT, 1.5 SECOND DELAY

Vehicle	N/O*	Pos. A1	Pos. A2	Pos. A3	Pos. A4
03 Navigator	O	No Data	(20 km/h)	(20 km/h)	−21
03 Navigator w/lam	O	No Data	35	No Data	No Data
04 Volvo XC90	O	(20 km/h)	193	130	18
04 Volvo w/lam	O	(20 km/h)	44	118	15
05 Chevy Trailblazer	O	138	168	159	No Data
05 Chevy Trailblazer w/lam	O	No Data	No Data	(20 km/h)	No Data
05 Chevy Trail. w/lam. (4 hole)	O	No Data	89	No data	No Data

[53] Ibid.

[54] Who Benefits From Side and Head Airbags?" (*http://www.edmunds.com/ownership/safety/articles/105563/article.html*), supra.

TABLE 10—FRONT ROW WINDOW, 24 KM/H IMPACT, 1.5 SECOND DELAY—Continued

Vehicle	N/O*	Pos. A1	Pos. A2	Pos. A3	Pos. A4
05 Honda Odyssey	O	No data	107	119	No data
05 Infinity FX35	O	128	101	99	55
05 Nissan Pathfinder	O	(20 km/h)	167	(20 km/h)	79
05 Toyota Highlander	O	(20 km/h)	137	142	116
06 Dodge Durango	O	174	156	(20 km/h)	54
06 Dodge Durango w/lam	O	No Data	101	No data	No Data
06 Dodge Dur. w/lam. (4 hole)	O	(20 km/h)	95	(20 km/h)	No Data
06 Mercury Monterey	O	To Stops	208	No data	32
06 Toyota Land Cruiser	O	229	No data	(20 km/h)	62
06 Volvo C70	O	(20 km/h)	No Target	No Target	No Target
07 Chevy Silverado	O	177	(20 km/h)	183	−1
07 Chevy Tahoe	O	To Stops	168	125	−25
07 Chevy Tahoe w/lam	O	113	100	124	No data
07 Chevy Tahoe w/lam. (4 hole)	O	No data	99	109	No data
07 Ford 500	O	(20 km/h)	160		38
07 Ford Edge	O	146	17	86	−9
07 Ford Edge	N	175	No data	155	No data
07 Ford Expedition	O	(20 km/h)	(20 km/h)	(20 km/h)	21
07 Jeep Commander	O	(20 km/h)	(20 km/h)	(20 km/h)	−62
07 Jeep Commander w/lam	O	No data	No data	148	No data
07 Mazda CX9	O	96	9	87	2
07 Mazda CX9	N	112	No data	90	No data
07 Saturn Vue	O	(20 km/h)	(20 km/h)	(20 km/h)	65
08 Dodge Caravan	O	136	84	(20 km/h)	−61
08 Ford Taurus X	O	146	73	99	−38
08 Subaru Tribeca	O	(20 km/h)	146		74
08 Toyota Highlander	O	64	41	54	12
08 Toyota Highlander	N	102	No data	77	No data
08 Toyota High. w/liner	N	90	No data	70	No data
09 Chevy Equinox	O	(20 km/h)	101	(20 km/h)	30
Average	.....	135	104	114	21
Standard Deviation	.....	42.1	55.8	33.7	45.9

TABLE 11—FRONT ROW WINDOW, 20 KM/H IMPACT, 1.5 SECOND DELAY

Vehicle	N/O*	Pos. A1	Pos. A2	Pos. A3	Pos. A4
03 Navigator	O	No Data	191	To Stops	−37
03 Navigator w/lam	O	No Data	6	No Data	No Data
04 Volvo XC90	O	163	96	119	−3
04 Volvo w/lam	O	127	27	97	(24 km/h)
05 Chevy Trailblazer	O	112	121	127	No Data
05 Chevy Trailblazer w/lam	O	86	80	109	No Data
05 Chevy Trail. w/lam. (4 hole)	O	No Data	62	98	No Data
05 Honda Odyssey	O	No data	96	57	−45
05 Infinity FX35	O	106	60	73	30
05 Nissan Pathfinder	O	192	138	248	60
05 Toyota Highlander	O	168	137	115	76
06 Dodge Durango	O	160	140	180	18
06 Dodge Dur. w/lam. (4 hole)	O	106	71	150	No Data
06 Mercury Monterey	O	185	199	No data	−10
06 Toyota Land Cruiser	O	174	No data	256	31
06 Volvo C70	O	200	No Target	No Target	No Target
07 Chevy Silverado	O	142	187	130	(24 km/h)
07 Chevy Tahoe	O	104	110	87	(24 km/h)
07 Chevy Tahoe w/lam	O	102	No data	No data	No data
07 Ford 500	O	192	113		(24 km/h)
07 Ford Edge	O	129	(24 km/h)	No data	(24 km/h)
07 Ford Edge	N	148	No data	67	No data
07 Ford Expedition	O	151	To Stops	137	(24 km/h)
07 Jeep Commander	O	To Stops	175	155	(24 km/h)
07 Jeep Commander w/lam	O	No data	No data	73	No data
07 Mazda CX9	N	76	No data	67	No data
07 Saturn Vue	O	To Stops	130	191	28
08 Dodge Caravan	O	112	No data	162	(24 km/h)

TABLE 11—FRONT ROW WINDOW, 20 KM/H IMPACT, 1.5 SECOND DELAY—Continued

Vehicle	N/O*	Pos. A1	Pos. A2	Pos. A3	Pos. A4
08 Ford Taurus X	O	110	No data	No data	(24 km/h)
08 Subaru Tribeca	O	180	106		(24 km/h)
09 Chevy Equinox	O	149	No data	200	(24 km/h)
Average		140	112	132	15
Standard Deviation		36.5	55.7	56.7	39.0

TABLE 12—FRONT ROW WINDOW, 16 KM/H IMPACT, 6 SECOND DELAY

Vehicle	N/O*	Pos. A1	Pos. A2	Pos. A3	Pos. A4
03 Navigator	O	To Stops	74	To Stops	−30
03 Navigator w/lam	O	157	−36	137	No Data
04 Volvo XC90	O	161	73	78	−22
04 Volvo w/lam	O	96	26	59	No Data
05 Chevy Trailblazer	O	121	192	124	No Data
05 Chevy Trailblazer w/lam	O	No Data	102	No Data	No Data
05 Chevy Trail. w/lam. (4 hole)	O	No Data	92	No Data	No Data
05 Honda Odyssey	O	No Data	69	77	−54
05 Infinity FX35	O	88	22	40	9
05 Nissan Pathfinder	O	117	104	195	43
05 Toyota Highlander	O	205	210	152	69
06 Dodge Durango	O	138	135	167	13
06 Dodge Durango w/lam	O	No Data	No Data	142	No Data
06 Dodge Dur. w/lam. (4 hole)	O	97	58	145	No Data
06 Mercury Monterey	O	222	183	No Data	35
06 Toyota Land Cruiser	O	146	207	229	16
06 Volvo C70	O	135	No Target	No Target	No Target
07 Chevy Silverado	O	145	244	115	−7
07 Chevy Tahoe	O	42	6	10	−136
07 Ford 500	O	151	58		−16
07 Ford 500 w/lam	O	96	No Data	No Data	No Data
07 Ford Edge	O	103	−42	7	−56
07 Ford Edge	N	123	No Data	33	No Data
07 Ford Expedition	O	141	205	109	3
07 Jeep Commander	O	255	144	136	−89
07 Jeep Commander w/lam	O	No Data	56	62	No Data
07 Jeep Commander w/lam. (4 hole)	O	No Data	50	60	No Data
07 Mazda CX9	O	54	−38	44	−53
07 Mazda CX9	N	67	No Data	31	No Data
07 Saturn Vue	O	184	180	186	72
08 Dodge Caravan	O	85	−39	121	−141
08 Ford Taurus X	O	104	−13	39	−88
08 Subaru Tribeca	O	122	77		−1
08 Toyota Highlander	O	36	0	54	−62
08 Toyota Highlander	N	119	No Data	52	No Data
09 Chevy Equinox	O	125	25	178	−46
Average		125	82	99	−25
Standard Deviation		50.1	87.2	61.1	58.1

TABLE 13—SECOND ROW WINDOW, 24 KM/H IMPACT, 1.5 SECOND DELAY

Vehicle	N/O*	Pos. B1	Pos. B2	Pos. B3	Pos. B4
03 Ford Navigator	O	To Stops	No data	No data	40
04 Volvo XC90	O	(20 km/h)	No data	No data	69
04 Volvo XC90 w/lam	O	92	No data	No data	62
05 Chevy Trailblazer	O	122	No data	No data	35
05 Honda Odyssey	O	152	193	71	80
05 Infinity FX35	O	148	No data	No data	47
05 Nissan Pathfinder	O	167	No data	No data	133
05 Toyota Highlander	O	152	No data	No data	154
06 Dodge Durango	O	86	82	76	91
06 Mercury Monterey	O	171	193	72	78
06 Toyota Land Cruiser	O	159	157	75	No Target
07 Chevy Silverado	O	153	(20 km/h)	78	117

TABLE 13—SECOND ROW WINDOW, 24 KM/H IMPACT, 1.5 SECOND DELAY—Continued

Vehicle	N/O*	Pos. B1	Pos. B2	Pos. B3	Pos. B4
07 Chevy Tahoe	O	(20 km/h)	161	24	74
07 Chevy Tahoe w/lam	O	No data	48	No data	No data
07 Ford 500	O	184	50	102	157
07 Ford 500 w/lam	O	91	No data	No data	111
07 Ford 500 w/lam. (4 hole)	O	No data	No data	No data	99
07 Ford Edge	O	39	21	−22	27
07 Ford Edge	N	51	33	No data	26
07 Ford Expedition	O	164	55	66	75
07 Jeep Commander	O	140	(20 km/h)	64	No data
07 Mazda CX9	O	36	2	51	9
07 Mazda CX9	N	22	No data	44	No data
07 Saturn Vue	O	No Target	144	66	No Target
08 Dodge Caravan	O	59	27	−16	−7
08 Ford Taurus X	O	45	34	22	31
08 Subaru Tribeca	O	133	85	80	111
08 Toyota Highlander	O	106	110	55	109
08 Toyota Highlander	N	125	144	No data	133
08 Toyota High. w/liner	N	133	138	No data	77
09 Chevy Equinox	O	72	22	39	45
Average	.....	112	89	53	76
Standard Deviation	.....	49.2	63.0	32.7	44.0

TABLE 14—SECOND ROW WINDOW, 20 KM/H IMPACT, 1.5 SECOND DELAY

Vehicle	N/O*	Pos. B1	Pos. B2	Pos. B3	Pos. B4
03 Ford Navigator	O	To Stops	No data	No data	−14
04 Volvo XC90	O	183	No data	No data	(24 km/h)
04 Volvo XC90 w/lam	O	94	No data	No data	(24 km/h)
05 Chevy Trailblazer	O	68	No data	No data	8
05 Honda Odyssey	O	134	84	42	34
05 Infinity FX35	O	90	No data	No data	21
05 Nissan Pathfinder	O	143	No data	No data	111
05 Toyota Highlander	O	110	No data	No data	106
06 Mercury Monterey	O	155	52	42	51
06 Toyota Land Cruiser	O	127	128	53	No Target
07 Chevy Silverado	O	114	232	(24 km/h)	101
07 Chevy Tahoe	O	249	No data	(24 km/h)	(24 km/h)
07 Ford 500	O	152	No data	89	128
07 Ford Expedition	O	146	23	(24 km/h)	(24 km/h)
07 Jeep Commander	O	122	107	(24 km/h)	No data
07 Saturn Vue	O	No Target	111	40	No Target
08 Subaru Tribeca	O	105	No data	(24 km/h)	No data
08 Toyota Highlander	O	No data	67	(24 km/h)	88
08 Toyota Highlander	N	92	89	No data	110
Average	.....	130	99	53	64
Standard Deviation	.....	43.4	59.3	20.7	49.9

TABLE 15—SECOND ROW WINDOW, 16 KM/H IMPACT, 6 SECOND DELAY

Vehicle	N/O*	Pos. B1	Pos. B2	Pos. B3	Pos. B4
03 Ford Navigator	O	126	No data	No data	−27
04 Volvo XC90	O	189	No data	No data	29
04 Volvo XC90 w/lam	O	63	No data	No data	9
05 Chevy Trailblazer	O	127	No data	No data	47
05 Honda Odyssey	O	121	28	12	55
05 Infinity FX35	O	64	No data	No data	20
05 Nissan Pathfinder	O	111	No data	No data	78
05 Toyota Highlander	O	143	No data	No data	110
06 Dodge Durango	O	36	18	3	71
06 Mercury Monterey	O	223	142	54	54
06 Toyota Land Cruiser	O	107	113	49	No Target
07 Chevy Silverado	O	124	194	53	63
07 Chevy Tahoe	O	120	−83	−21	15
07 Chevy Tahoe w/lam	O	66	No data	No data	No data
07 Chevy Tahoe w/lam. (4 hole)	O	58	No data	No data	No data
07 Ford 500	O	133	−3	56	94
07 Ford 500 w/lam	O	64	No data	No data	No data
07 Ford Edge	O	−16	−40	−76	−25

TABLE 15—SECOND ROW WINDOW, 16 KM/H IMPACT, 6 SECOND DELAY—Continued

Vehicle	N/O*	Pos. B1	Pos. B2	Pos. B3	Pos. B4
07 Ford Expedition	O	89	159	22	34
07 Jeep Commander	O	107	99	27	57
07 Mazda CX9	O	−15	−58	5	−35
07 Saturn Vue	O	No data	138	26	No data
08 Dodge Caravan	O	−58	−29	−55	−56
08 Ford Taurus X	O	−17	−19	−13	−40
08 Subaru Tribeca	O	76	19	28	20
08 Toyota Highlander	O	49	59	32	57
08 Toyota Highlander	N	87	105	No data	93
09 Chevy Equinox	O	15	−51	1	−14
Average		81	44	12	31
Standard Deviation		63.9	84.5	37.2	46.8

TABLE 16—THIRD ROW WINDOW, 24 KM/H IMPACT, 1.5 SECOND DELAY

Vehicle	N/O*	Pos. C1	Pos. C2	Pos. C3	Pos. C4
05 Honda Odyssey	O	No data	(20 km/h)	No data	175
06 Mercury Monterey	O	188	(20 km/h)	119	No data
06 Toyota Land Cruiser	O	NC	NC	180	NC
07 Chevrolet Tahoe	O	91	No Target	194	No Target
07 Chevrolet Tahoe w/lam	O	No Data	106	141	No Data
07 Ford Expedition	O	(20 km/h)	No data	81	186
07 Jeep Commander	O	229	155	120	102
08 Dodge Caravan	O	−42	112	35	−41
08 Ford Taurus X	O	No Target	To Stops	48	No Target
08 Toyota Highlander	O	−42	42	92	No data
08 Toyota Highlander	N	No data	No data	110	No data
08 Toyota Highlander w/liner	N	No data	No data	42	No data
Average		85	104	106	106
Standard Deviation		126.1	46.6	53.1	104.5

TABLE 17—THIRD ROW WINDOW, 20 KM/H IMPACT, 1.5 SECOND DELAY

Vehicle	N/O*	Pos. C1	Pos. C2	Pos. C3	Pos. C4
05 Honda Odyssey	O	No data	To Stops	58	122
06 Dodge Durango	O	No data	To Stops	66	No data
06 Mercury Monterey	O	147	212	75	No data
06 Toyota Land Cruiser	O	NC	NC	128	NC
07 Chevrolet Tahoe	O	58	No Target	No data	No Target
07 Ford Expedition	O	241	No data	No data	51
07 Jeep Commander	O	No data	115	102	No data
08 Ford Taurus X	O	No Target	86	(24 km/h)	No Target
08 Toyota Highlander	N	No data	No data	88	No data
Average		149	138	86	86
Standard Deviation		91.5	66.0	25.8	50.6

TABLE 18—THIRD ROW WINDOW, 16 KM/H IMPACT, 6 SECOND DELAY

Vehicle	N/O*	Pos. C1	Pos. C2	Pos. C3	Pos. C4
05 Honda Odyssey	O	To Stops	To Stops	44	80.
06 Dodge Durango	O	No Data	No Data	52	No Data.
06 Mercury Monterey	O	186	204	142	225.
06 Toyota Land Cruiser	O	NC	NC	98	NC.
07 Chevrolet Tahoe	O	30	No Target	64	No Target.
07 Chevrolet Tahoe w/lam	O	No Data	57	66	No Data.
07 Ford Expedition	O	233	No Data	49	34.
07 Jeep Commander	O	170	104	92	56.
08 Dodge Caravan	O	−91	34	−42	−113.
08 Ford Taurus X	O	No Target	60	7	No Target.
08 Toyota Highlander	O	No Data	−23	37	No Data.
Average		106	73	55	56.
Standard Deviation		133.4	76.5	48.2	120.6.

Trends in Performance of Ejection Mitigation Systems by MY Using Old Impactor

Based on the vehicles the agency tested, there appears to be a trend toward improved performance as each model year passes. This is demonstrated by increased coverage of the window opening in the more recent MY vehicles tested and the ability of the countermeasure to restrain displacement of the impactor. While it is difficult to quantify this trend, the trend is shown graphically below by plots of displacement values by model year for the 1st row (Figure 2) and 2nd Row (Figure 3). These graphs are restricted to the 24 km/h-1.5 second test using the old impactor and exclude any testing with advanced glazing.

Note: Not shown in the figure are data from older vehicles which often had no curtain coverage at a particular target. If there was no curtain coverage, we did not test the target since the 100 mm displacement limit would have been exceeded. Although these vehicles are not shown on the graph, their improved curtain coverage in recent MY vehicles is indicative of improved performance over time.

Since the graphs span multiple vehicles, there is scatter in the data. Nonetheless, when a trend line is plotted through the data for each impact location it shows decreasing displacement for newer models.

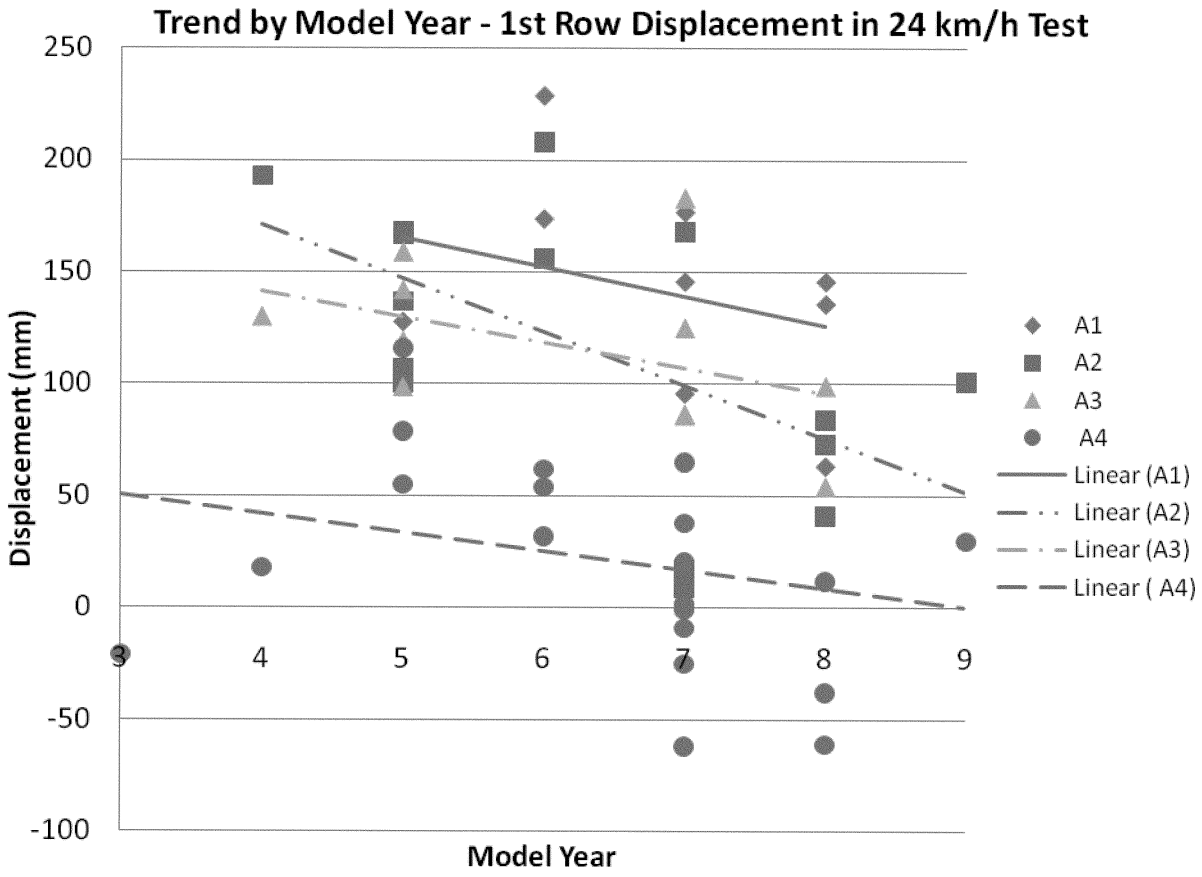

Figure 2

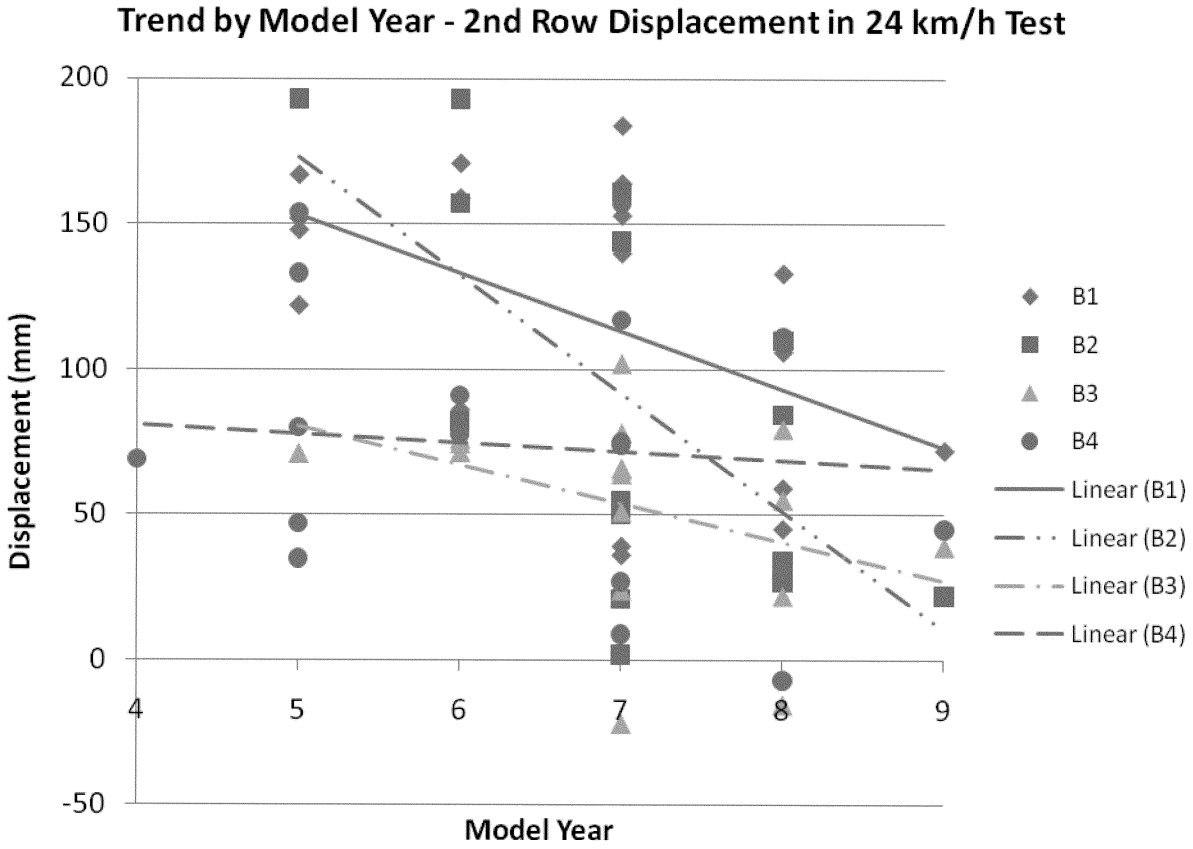

Figure 3

One comparison to note for illustration purposes is the improved performance of the MY 2008 Highlander in comparison to the MY 2005 Highlander. Table 19 shows the change in displacement values for the two model years of the Highlander at each target location and across impact speeds. The largest change in displacement value was for the 16 km/h tests at targets A1 and A2 (169 mm and 210 mm, respectively). On an average basis, the MY 2008 Highlander had 103 mm less displacement across all tested target locations, for a 76 percent overall reduction. This is illustrative of the improved performance of later MY vehicles. We believe that the MY 2008 Highlander had increased coverage of the ejection mitigation curtain and increased size of the inflated chambers which helped to restrain the impactor.

TABLE 19—OLD IMPACTOR, ABSOLUTE AND PERCENTAGE CHANGE IN DISPLACEMENT (MM) BETWEEN MY2005 AND MY2008 TOYOTA HIGHLANDER

Test vel.	A1	A2	A3	A4	B1	B4
24	.....	−96	−88	−104	−46	−45
16	−169	−210	−98	−131	−94	−53
Average (mm)	−103					
24	.....	−70%	−62%	−90%	−30%	−29%
16	−82%	−100%	−64%	−190%	−66%	−48%
Average (%)	−76%					

Comparing Results of Tests With Old and New Impactors

Several vehicles (the MY2008 CX9, Edge and Highlander) were tested using both the old and new impactor.

Table 20 shows the difference in displacements measured at target locations where both impactors were used.[55] Not surprisingly, these data generally indicate that the new impactor tends to result in greater displacement (positive difference); we believe this is due to lower dynamic friction. Yet, the old impactor displacement exceeded the new impactor (negative difference) at several targets as well.

The CX9 was the only vehicle that was impacted multiple times at the same targets by both the old and new

[55] In some cases average values were used to calculate the differences.

impactor. A student's t-test was performed to determine if the difference in the results were significant.[56] Table 21 shows the displacement values and statistics for targets A1 and A3. The difference in displacement was statistically significant ($p \leq 0.05$) for the A1 target, but not the A3 target.

TABLE 20—CHANGE IN DISPLACEMENT BETWEEN OLD AND NEW IMPACT TEST DEVICE

Vehicle	Test vel. (km/h)	A1	A3	B1	B2	B3	B4	C3
08 Ford Edge	24	29.0	69.0	12.0	12.0		−1.0	
08 Mazda CX9	24	15.5	3.0	−14.0	0.0	−7.0	0.0	
08 Toyota Highlander	24	38.5	23.0	19.0	34.0		24.0	18.0
08 Ford Edge	20	18.5						
08 Toyota Highlander	20				22.0		22.0	
08 Ford Edge	16	19.5	26.0					
08 Mazda CX9	16	13.0	−13.0					
08 Toyota Highlander	16	83.0	−2.0	38.0	46.0		36.0	
	Average	31.0	17.7	13.8	28.5	−7.0	20.3	18.0
Average All		21.6						

TABLE 21—IMPACTOR COMPARISON FOR MAZDA CX9

Test Vel. (km/h)	A1		A3	
	Old	New	Old	New
24	94	110	84	90
	98	113	89	89
Average	96.0	111.5	86.5	89.5
Std.	2.8	2.1	3.5	0.7
P–Value	0.013		0.180	

Despite the differences in test results, the test results from the old impactor provided useful data to assess the relative performance of ejection mitigation countermeasures. The results from the impactor are useful when analyzing data obtained from the old impactor alone, to compare vehicles to each other or to previous model year vehicles, or compare data from impact points on a vehicle.

Research Testing With New Impactor

As part of our analysis of the data, we evaluated data from only the new impactor to avoid confounding the comparison of data by impactor differences. Table 22 shows the change in displacement between the 24 km/h-1.5 second, 20 km/h-1.5 second and 16 km/h-6 second tests at various target locations for the MY 2007 Edge, MY 2007 CX9 and MY 2008 Highlander. The 24 km/h-1.5 second test always had greater displacement than the 20 km/h-1.5 second test. On average this difference was 38.3 mm when averaged over all vehicles and target locations. This is an expected result because the only difference is the impact speed.

TABLE 22—NEW IMPACTOR, CHANGE IN DISPLACEMENT (MM) BETWEEN 24 KM/H 1.5 SECOND, 20 KM/H 1.5 SECOND AND 16 KM/H 6 SECOND TESTS

Vehicle	Test comparison	A1	A3	B1	B2	B4	C3
07 Ford Edge	24–20	28	88				
07 Mazda CX9	24–20	36	23				
08 Toyota Highlander	24–20			33	55	23	22
07 Ford Edge	24–16	53	122				
07 Mazda CX9	24–16	45	59				
08 Toyota Highlander	24–16	−17	25	38	39	40	
07 Ford Edge	20–16	25	34				
07 Mazda CX9	20–16	9	36				
08 Toyota Highlander	20–16			5	−16	17	
Average All—24–20		38.3					
Average All—24–16		44.7					
Average All—20–16		15.7					

[56] The one sided t-test was performed assuming equal variance to determine if the new test device had produced larger displacement values compared to the old device.

There were only two vehicles/target locations that had more than one impact at multiple test speeds. Although this is extremely limited data, they allow a t-test to be performed.[57] The results are given in Table 23. The results indicate that the 16 km/h-1.5 second impact had statistically significant less displacement than both the higher speed tests at target A1.

TABLE 23—NEW IMPACTOR, COMPARISON OF TARGET A1 DISPLACEMENT AS A FUNCTION OF IMPACT VELOCITY

Vehicle	CX9		Edge	
Test Type	16 km/h–6 sec.	24 km/h–1.5 sec.	16 km/h–6 sec.	20 km/h–1.5 sec.
	75 59	110 113	126 119	152 143
Average	67.0	111.5	122.5	147.5
Std.	11.3	2.1	4.9	6.4
P–Value	0.016		0.024	

b. Field Performance

The agency evaluated available crash data to better understand the field performance of the current fleet equipped with side curtain air bags. A focus of this evaluation was the performance of the rollover sensors and their ability to detect the rollover event and activate deployment of the side curtain air bags. We also sought to understand the occupant containment provided by the vehicle system. Several sources of available data were reviewed. These included detailed analysis on a limited number of rollover crashes by NHTSA's Special Crash Investigation (SCI) division, case reviews of NASS CDS cases from the target population of the final rule, and data from a new Rollover Data Special Study project. Detailed reviews of some of these cases can be found in the technical report accompanying this final rule.

SCI Cases Presented in the NPRM

The following seven SCI cases were discussed in the NPRM. The agency's SCI division analyzed seven real-world rollover crashes of Ford vehicles where the subject vehicles contained a rollover sensor and side curtain air bags. (Ford had agreed to notify SCI of the crashes.) The subject vehicles were Ford Expeditions, a Ford Explorer, a Mercury Mountaineer, and a Volvo XC90. Table 24 gives details about each case.

In each case, the rollover sensor deployed the side curtain air bag. Of the seven cases, there were a total of 19 occupants, 15 of whom were properly restrained. All were in lap/shoulder belts, except one child in a rear facing child restraint system (CRS). A single crash (DS04–016) had all of the unrestrained occupants, serious injuries, fatalities and ejections in this set of cases. Two of the four unrestrained occupants were fully ejected from the vehicle, resulting in one fatal and one serious injury. The fatality was a 4-month-old infant, seated in the middle of the 2nd row. The ejection route was not determined. The seriously injured occupant was an adult in the left 3rd row, ejected through the uncovered right side 3rd row window. One non-ejected, restrained occupant received a fatal cervical fracture resulting from roof contact and another was seriously injured. The injuries to the remaining occupants were "none" to "minor."

[57] The one sided t-test was performed assuming equal variance to determine if the 24 km/h impact produced larger displacement values compared to the 20 km/h impact.

TABLE 24—FORD SCI ROLLOVER CASES (PRESENTED IN THE NPRM)

Case	Make	Model	MY	Occupants			¼ Rot.	Deploy		
				Row 1	Row 2	Row 3		Angle	Time (ms)	Rate (deg/s)
CA02–059	Mercury	Mount.	2002	1R	1R		1	17		17 to 25
CA04–010	Ford	Expl.	2003	1R			1	43	20	75
IN–02–010	Ford	Exped.	2003	1R			2	45	146	111
2004–003–04009	Ford	Exped.	2003	1R	2R		5	Yes	Unknown	Unknown
DS04–016	Ford	Exped.	2003	2R	2R, 2NR†.	1R, 2NR†.	5	Yes	Unknown	Unknown
DS04017	Ford	Exped.	2004	1R			12	Yes	Unknown	Unknown
2003–079–057	Volvo	XC90	2003	1R	1R		6	Yes	Unknown	Unknown

R = Restrained, NR = Not Restrained.
† One NR 2nd and 3rd row occupant ejected (total of 2 ejected).

Rollover Data Special Study (RODSS)

RODSS is a new source of rollover crash data that began in April 2007. NHTSA initiated RODSS as a pilot project to obtain additional field data for rollover crashes not covered by other agency databases. Cases were identified through the FARS database. NASS CDS and SCI cases were excluded from consideration because detailed information from those crashes would be available from those databases. However, remote SCIs were performed on selected cases.[58] The technical report for this final rule includes a discussion of the RODSS study conducted for this final rule.

RODSS is not a random sample and is not intended to be statistically representative of all rollover crashes nationally. Also, the sample size is small and becomes even smaller when separating the data into subcategories. Accordingly, observations based on the RODSS data about the relationship of side curtains and ejection are inherently limited.

To become part of the RODSS sample, the vehicle had to be exposed to a rollover crash and have a side curtain air bag and/or electronic stability control (ESC)/rollover stability control (RSC). The curtain air bag did not have to be deployable in a rollover, i.e., the curtain air bag could be an FMVSS No. 214 side impact air curtain without a rollover sensor, but some vehicles did have a rollover sensor.

The study first reviewed a total of 328 crashes occurring in 2005 through 2008. Of these 328 case vehicles, 315 were coded as exposed to a lateral rollover. Of these 315 case vehicles, 115 were believed to be equipped with side curtain air bags. Of these 115 case vehicles, 21 were believed to have a rollover sensor (rollover curtain). Of these 21 case vehicles, 18 had their curtains deploy during the rollover and 3 did not. These three cases of non-deployment are of interest relative to sensor performance and will be discussed in more detail later, along with a non-deployment SCI case.

Curtain deployment coding was tied to the driver or passenger, i.e., if there was someone seated on the side of the vehicle where the curtain deployed, it was coded as deployed for that occupant. There were 120 side curtain air bags deployed adjacent to occupants of the vehicles (58 drivers and 62 passengers). Limiting RODSS occupant selection to those in vehicles exposed to a lateral rollover, and those who had a known ejection status, then separating by known curtain deployment, results in Table 25, below. This table shows 119 occupants (57 drivers and 62 passengers) who were exposed to a curtain deployment and 496 (244 drivers and 252 passengers), who were not.

TABLE 25—RODSS DRIVER AND PASSENGER IN LATERAL ROLLOVERS WITH KNOWN EJECTION STATUS BY KNOWN CURTAIN DEPLOYMENT

Curtain deployment	Drivers	Passengers	All occupants
Yes	57	62	119
No	244	252	496
Total	301	314	615

General Observations From RODSS About Ejection Rates Relative to Curtain Air Bags

Again, any observations made based on the RODSS data about the relationship of side curtains and ejection must be prefaced by the fact that RODSS is not a random sample and is not intended to be statistically representative of all rollover crashes nationally.

The data from the 615 occupants in Table 25 form the basis of a comparison on ejection status versus curtain air bag deployment found in Tables 26 and 27. The "curtain deployed" group is made up of vehicles that had a rollover sensor and vehicles that did not (the latter vehicles may have had a side impact sensor only). The "curtain not deployed" group is made up of vehicles equipped or not equipped with a curtain, i.e., one possible reason for the curtain not deploying is that it did not exist.

We studied the data to see if side curtains had an effect in mitigating rollover ejections. We were aware that care should be taken in drawing conclusions from these results. Most of the curtain-equipped vehicles exposed to lateral rollovers had only FMVSS No. 214 side impact curtains (94 vehicles), rather than rollover curtains (21 vehicles). It is possible that if a side impact curtain deployed during the crash, the crash might be different than a crash where a side impact curtain did not deploy. An important difference when examining ejection data is rollover severity as quantified by number of quarter-turns. To help determine if there was an obvious bias in the data, we examined the difference between the quarter-turns in the rollover crashes where the side impact curtains deployed and the number of quarter turns in the rollover crashes where they did not deploy.

RODSS data indicate that deployment of any curtain (even a side impact curtain) has a positive effect on reducing the rate of side window ejection. Table 26 shows that 10.9 percent [13/119] of all occupants adjacent to a curtain air bag deployment were ejected through the side windows, in comparison to 27.6 percent [137/496] of those occupants who were not adjacent to a curtain deployment.

Restricting the data to occupants protected by a curtain deployed by a rollover sensor, 5.3 percent [2/38] were ejected. The cases involving the two occupants who were ejected, even though the rollover curtain deployed, are discussed in a later section.

[58] A remote SCI is one where, for a variety of reasons, the investigator is not able to physically examine the crash location and vehicles. The investigation is done through the use of police accident reports, scene diagrams and photographs.

Table 26 – RODSS Ejection Status of All Occupants by Curtain Deployment.

Curtain Deployment		Rollover Sensor		Ejection Status					
				Not	Other Area		Side Window		
				Ejected	Count	Rate	Injured	Fatal	Rate
Yes	119	Yes	38	29	7	18.4%	0	2*	5.3%
		No	81	52	18	22.2%	1	10	13.6%
		Total	119	81	25	21.0%	1	12	10.9%
		Curtain Equipped							
No	496	Yes	80	40	14	17.5%	4	22	32.5%
		No	416	252	53	12.7%	23	88	26.7%
		Total	496	292	67	13.5%	27	110	27.6%

*These two fatal ejections occurred despite deployment of the rollover curtain.

Table 27 examines the subset of occupants from Table 26 who were unbelted. Table 27 shows that 22.7 percent [10/44] of unbelted occupants in vehicles with curtain air bag deployment were ejected through the side windows, in comparison to 51.9 percent [108/208] of those unbelted occupants in vehicles where the curtain did not deploy. Rollover severity (as represented by number of quarter-turns) does not seem to account for the difference in the ejection rates for these two unbelted groups.

When the data are restricted to only unbelted occupants protected by rollover curtains, 10.0 percent [1/10] were ejected through the side window, as compared to 26.5 percent [9/34] of unbelted occupants protected by side impact curtains. We note that two unbelted occupants were not ejected in vehicles with deployed rollover curtains.

Table 27 – RODSS Ejection Status of Unbelted Occupants by Curtain Deployment.

Curtain Deployment		Rollover Sensor		Ejection Status					
				Not	Other Area		Side Window		
				Ejected	Count	Rate	Injured	Fatal	Rate
Yes	44	Yes	10	2*	7	70.0%	0	1	10.0%
		No	34	8	17	50.0%	1	8	26.5%
		Total	44	10	24	54.5%	1	9	22.7%
		Curtain Equipped							
No	208	Yes	41	8	11	26.8%	4	18	53.7%
		No	167	39	42	25.1%	23	63	51.5%
		Total	208	47	53	25.5%	27	81	51.9%

Cases Where Occupants Were Ejected Through Rollover Curtain-Equipped Windows

We examined SCI rollover crashes, NASS CDS cases from the target population of the final rule and data from the RODSS project and found six case vehicles where occupants were ejected through the side window opening that a rollover deployed curtain presumably covered. These cases are listed in Table 28, along with the number of quarter turns, occupant seating position, belt use, occupant age, degree of ejection, ejection route, and level of injury.

The average number of quarter-turns was 5.5. These six crashes involved nine occupants, six of whom were partially or completely ejected through a protected side window. Four occupants were partially ejected and two were completely ejected. All six were front seat occupants, although one was ejected through a second row window. Four of the ejected occupants were killed in the crash. One fatal partial ejection was ejected through a window protected by both a curtain and a laminated window. Four of these cases involved curtain damage. In two, the A-pillar tether detached. It is not possible to know if these instances of curtain damage occurred during the rollover or post-crash due to extrication.

TABLE 28—RODSS, NASS CDS AND SCI CASES WITH OCCUPANTS WHO WERE EJECTED THROUGH SIDE WINDOWS PROTECTED BY ROLLOVER CURTAINS

Case ID	Year/Make/Model	1/4 Turns	Curt. depl.	Seat pos.	Belt use	Age	Eject.	Route	Injury/ MAIS
RODSS									
7238*	06 Ford Explorer	6	Yes	11	No	84y	Comp.	Row 1 L	Fatal.
8289*	03 Lincoln Aviator‡	8+	Yes	11	Yes	62y	Part	Row 1 L	Fatal.
8289*	03 Lincoln Aviator‡	8+	Yes	12	Yes	28y	No	NA	Serious.
8289*	03 Lincoln Aviator	8+	Yes	23	Yes	65y	No	NA	Moderate.
NASS CDS									
2003–04–048*	02 Ford Explorer	4	Yes	11	Yes	54y	No	NA	1.
2003–04–048	02 Ford Explorer	4	Yes	13	Yes	49y	Part	Row 1 R	1.
2006–79–089	04 Lexus RX330	1	Yes	11	No	27y	Part	Row 2 L	Fatal.
2008–03–108	08 Honda Pilot	6	Yes	11	No	48y	Part	Row 1 L	3.
2008–12–159	05 Mercury Mont	8	Yes	11	No	23y	Comp.	Row 1 L	Fatal.

*These are also SCI cases.[59]
‡These seating positions had laminated glazing adjacent to them.

Non-Deployed Rollover Curtains in Rollover Crashes

We examined SCI rollover crashes, NASS CDS cases from the target population of the final rule and data from the RODSS project to find if the rollover sensors deployed the rollover side air curtains in a rollover. In general, field data indicate that rollover sensors have been recognizing a rollover and deploying rollover curtains in rollover crashes.

We found five case vehicles where the vehicle was apparently equipped with a side curtain air bag that was supposed to be deployed by a rollover sensor and the curtains did not deploy in the rollover event (*see* Table 29). There were two completely ejected occupants and one partial ejected occupant in these crashes. The results of these ejections were 3 fatalities. All of these ejections were through side windows except one where the front passenger door was dislodged from the vehicle and provided the ejection route for the unbelted driver.

Consistent among these non-deployment cases is that the rollover was preceded by a significant frontal impact. Four of the five non-deployment cases had a significant frontal impact that preceded the rollover. The MY 2006 Ford Explorer in RODSS case 6121 had a right front corner impact with a large tree prior to the rollover. The MY 2003 Lincoln Aviator in RODSS case 7242 had an offset frontal impact with an oncoming vehicle prior to the rollover. The MY 2006 Cadillac SRX in SCI case DS07009 impacted a large tree prior to the rollover. The EDR data from this case indicated that the tree impact had a longitudinal and lateral ΔV of -38.9 mph and -10.2 mph, respectively. The EDR also indicated that the rollover sensor status was "invalid" and the curtain deployment was not commanded. The MY 2009 Dodge Journey had a narrow offset frontal impact with another vehicle, which the crash investigator stated disrupted the power supply from the battery. The frontal air bags deployed in the above four crashes. (There is some doubt as to whether RODSS case 6121 (SCI CA9062) was definitely equipped with a rollover sensor, since the system was an option on this vehicle. Ultimately, no definitive determination was made.) For the cases involving initial frontal impacts, these impacts may have destroyed the vehicle battery and thus eliminated the primary power source for deploying the rollover curtain.

In RODSS case 5032 (SCI CA9061), it appears the sensor may not have been able to make a determination that a rollover occurred. However, in studying the details of this case, the vehicle's kinematics were very complex and may have included some motion not typical of a lateral rollover.

TABLE 29—RODSS AND SCI ROLLOVER CASES WHERE THE ROLLOVER CURTAIN DID NOT DEPLOY

Case ID	Year/Make/Model	Quarter turns	Curt. depl.	Seat pos.	Belt use	Age	Eject.	Route	Injury/ MAIS
RODSS									
5032*	04 Lincoln Aviator‡	3	No	11	No	68y	Comp.	Row 2 R	Fatal.
6121*	06 Ford Explorer	4	No	11	No	23y	Comp.	Door (13)	Fatal.
7242*	03 Lincoln Aviator‡	3	No	11	Yes	28y	No	NA	Serious.
7242*	03 Lincoln Aviator‡	3	No	13	Yes	26y	No	NA	Serious.
7242*	03 Lincoln Aviator	3	No	21	CRS	3y	No	NA	Serious.
7242*	03 Lincoln Aviator	3	No	23	Yes	7y	No	NA	Serious.
SCI									
DS07009	06 Cadillac SRX	4	No	11	No	81y	Part	Row 1 L	Fatal.
DS09071	09 Dodge Journey	4	No	11	Yes	63y	No	NA	2.
DS09071	09 Dodge Journey	4	No	13	Yes	60y	No	NA	1.

*These are also SCI cases.[60]
‡These seating positions had laminated glazing adjacent to them.

[59] Both RODSS cases were made into SCI remote investigations to facilitate documentation of photographs and other crash details. The SCI case numbers are CA09069 (RODSS 7238) and CA10006 (RODSS 8289).

X. Response to Comments and Agency Decisions

Laboratory and field data indicate that window curtains covering side windows can substantially reduce ejections in rollovers. NHTSA issued the NPRM to require that the side windows next to the first three rows of seats be subject to performance requirements that ensure the vehicle has an ejection mitigation countermeasure that would prevent an 18 kg headform from moving more than 100 mm beyond the zero displacement plane of each window when the window is impacted.

The NPRM proposed requirements for: (a) The impactor dimensions and mass; (b) the displacement limit; (c) impactor time and speed of impact; (d) target locations, and (e) testing the targets. We also discussed: (f) glazing issues; (g) test procedure tolerances; (h) test device characteristics; and (i) a proposal for a telltale requirement. The NPRM did not specifically require a rollover sensor. A 3-year lead time and 4-year phase-in was proposed, along with allowance of advanced credits to meet phase-in requirements. Costs, benefits, and other impacts were discussed in a PRIA accompanying the NPRM.

a. Impactor Dimensions and Mass

1. NPRM

The component test involves use of a guided linear impactor that is designed to replicate the loading of a 50th percentile male occupant's head and upper torso during ejection situations. The portion of the impactor that strikes the countermeasure is a featureless headform that was originally designed for the upper interior head protection research program (FMVSS No. 201).[61] It averages the dimensional and inertial characteristics of the frontal and lateral regions of the head into a single headform. The NPRM specified that the headform is covered with an approximately 10 mm thick dummy skin material whose outer surface dimensions are given in Figure 4, below. The Technical Analysis report accompanying the NPRM discusses other dimensional attributes of the headform, such as the curvature of the outer surface.

There are many possible ways of delivering the impactor to the target location on the ejection mitigation countermeasure. Both the old and new impactors used in agency research propel the shaft component of the impactor with a pneumatic piston. The shaft of the old impactor slides along a plastic (polyethylene) bearing. The new impactor uses curved roller bearings for part of the shaft support, which reduces the energy loss due to friction. The impactor has an 18 kg mass.[62]

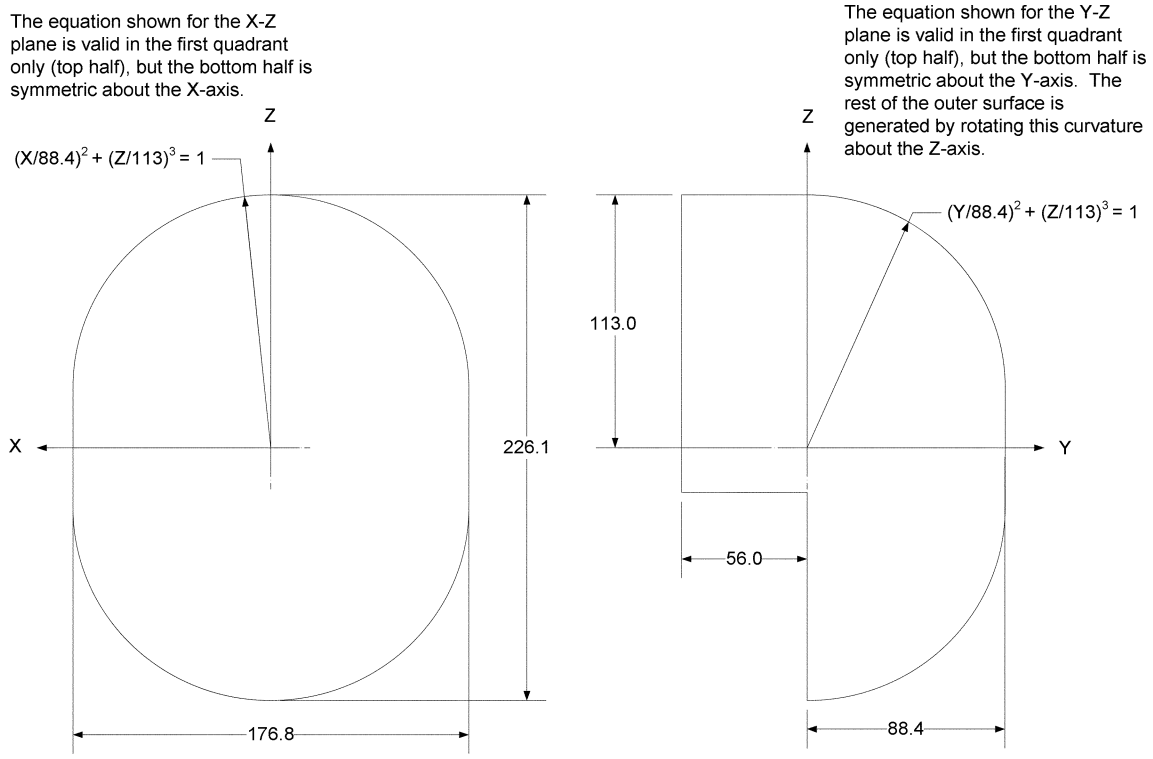

Figure 4 – Front and side view of headform outer surface (right) with dimensions given in millimeters

[60] These three RODSS cases were made into SCI remote investigations to facilitate documentation of photographs and other crash details. The SCI case numbers are RODSS 5032 (CA09061), RODSS 6121 (CA9062) and RODSS 7242 (CA9063).

[61] "Ejection Mitigation Using Advanced Glazings: A Status Report," November 1995, Docket NHTSA–1996–1782–3; "Ejection Mitigation Using Advanced Glazings: Status Report II," August 1999, Docket NHTSA–1996–1782–21; "Ejection Mitigation Using Advanced Glazings: Final Report," August 2001, Docket NHTSA–1996–1782–22.

[62] Since the performance criterion for this ejection mitigation standard is a linear displacement measure (a linear displacement measure would correlate to the actual gap through which an occupant can be ejected), a linear impactor is a suitable tool to dynamically measure displacement. The impactor can be placed inside the vehicle for testing the ejection mitigation curtains and glazing covering window openings.

The mass of the guided impactor was developed through pendulum tests, side impact sled tests, and modeling conducted to determine the mass imposed on the window opening by a 50th percentile adult male's upper torso and head during an occupant ejection ("effective mass").[63] Briefly, the pendulum impact tests were conducted on a BioSID anthropomorphic test device (50th percentile adult male) to measure effective mass of the head, shoulder, and upper torso. The BioSID was chosen because it was originally configured for side impact, unlike the Hybrid III dummy, and has a shoulder which the Side Impact Dummy (49 CFR 572, subpart F) used for FMVSS No. 214, "Side impact protection," does not have. A linear impact pendulum weighing 23.4 kg was used to strike the head and shoulder of the dummy laterally (perpendicular to the midsagittal plane) using two impact speeds (9.7 and 12.9 km/h) and four impact surfaces. In addition to the rigid impactor face, three types of padding were added to the impactor face to increase the contact time and replicate advanced glazing impacts.

Effective mass was calculated by dividing the force time history calculated from the pendulum accelerometers by the acceleration time history from the dummy sensors. In general, higher speed impacts and impacts with softer surfaces generated higher effective mass. Based on these pendulum tests, a range for the effective mass of the head and upper torso was estimated to be 16 to 27 kg.

In the sled tests, we used a side impact sled buck with a load plate representing a door and two load plates representing the glazing to measure shoulder and head impacts with three different stiffness foams. The purpose of these tests was to determine the effect lower body loading would have on the combined head and upper torso effective mass. Two impact conditions were simulated, one condition was described as being representative of a rollover event and the second was described as being representative of a side impact event.

In the rollover condition, the impact speed was intended to be 16.1 km/h (10 mph) and the dummy was positioned leaning towards the door such that the head and torso would contact the simulated glazing at the same time. This leaning position was intended to be more representative of an occupant's attitude in a rollover. For the test designed to be more representative of a side impact condition, the dummy was seated upright and the impact speed was intended to be 24.1 km/h (15 mph).

In the preamble of the NPRM, we described the agency's analysis of these tests as follows. As was done for the pendulum data, the effective mass was calculated by dividing the force time history calculated from the pendulum accelerometers by the acceleration time history from the dummy sensors. Using this method, the effective mass of the head and upper torso calculated for the 16.1 km/h impact condition showed a quick rise to about 18 kg by about 5 ms, followed by an increase to about 40 kg at about 30 ms. The effective mass for the 24.1 km/h impact condition showed an initial artificially high value or spike prior to 5 ms because of a lag between the force measured in the load plates and the acceleration measured at the upper spine. This spike was also seen in some pendulum shoulder impacts. The effective mass settled to about 9 kg at about 10 ms, with a slow rise to about 18 to 20 kg at about 25 to 30 ms. Looking at the results, we deferred to the 18 kg effective mass since the test condition more closely represented a rollover. In addition, the 18 kg value was within the range of the pendulum impactor results discussed above, which showed an effective mass range between 16 and 27 kg.

For this final rule, we have reanalyzed these sled tests primarily for the purpose of determining impact energy, which we address in detail later in this preamble.[64] However, this analysis also generated estimates of the effective mass of the dummies in these tests. For the 24.1 km/h test, three methods (represented by equations 2–4, *infra*) gave a range of the combined head and shoulder effective mass of 12.2 to 13.1 kg. We believe that a reasonable estimate is 13 kg. The analysis for the 16.1 km/h test is more complex due to the time dependent dummy orientation. After making estimates of the impact energy using a simple sprung mass model, we back calculated the effective mass assuming the impact energy is equal to the kinetic energy prior to impact (represented by equation 3, *infra*). We also used the sled velocity as a surrogate for relative dummy speed and calculated effective mass directly by using an equation 4, *infra*. From these calculations we estimated a combined head and shoulder effective mass of 22 kg.

In the NPRM preamble, we reported that the agency also performed a computer modeling analysis of an 18 kg impactor and 50th percentile Hybrid III dummy impacting simulated glazing (foam). The comparison found that the total energy transferred by the 18 kg impactor was within the range of the total energy transferred by the entire dummy. For a 16.1 km/h dummy model impact with the foam, the effective mass that came in contact with the foam was between 12.5 kg and 27 kg.

We noted in the NPRM that the 18 kg proposed mass is consistent with that used by General Motors (GM) in 16.2 km/h (10 mph) tests of ejection mitigation curtains.[65] GM based this value on test results from 52 full-vehicle rollover tests that estimated the effective mass of occupant contact with the first row side window area. A more detailed analysis of this study can be found later in this preamble.

The estimated effective mass for most belted tests was about 5 kg and all were less than 10 kg. The majority of belted tests had effective masses which were a combination of both the near and far side occupants. The effective mass for the unbelted occupants ranged from 5 to 85 kg.

In summary, the proposed impactor mass was based on the determination of an effective mass calculated through both pendulum and sled test impacts and modeling. These methods resulted in a large range of effective mass values. In the end, we deferred to the 18 kg equivalent mass seen during the sled test that was intended to be more representative of a rollover event, which was also the equivalent mass calculated from pendulum impact into the dummy shoulder. For this final rule we have reanalyzed the sled tests and estimated a range of effective mass from approximately 13 to 22 kg. Thus, the 18 kg effective mass is still considered to be a reasonable representation of an occupant's head and a portion of the torso. An effective mass more representative of just the head would be substantially smaller, and an equivalent mass accounting for more torso and lower body mass would be substantially more. The 18 kg mass is well within the GM estimates from vehicle rollover tests, and is consistent with the impactor that GM uses to evaluate side curtains.

[63] "Technical Analysis in Support of a Notice of Proposed Rulemaking for Ejection Mitigation," *supra.*

[64] The video from these tests and the data from the dummies, load wall and sled can be accessed from the NHTSA Biomechanics Database at *http://www-nrd.nhtsa.dot.gov/database/aspx/biodb/querytesttable.aspx.* The test numbers are 10282 through 10287. Tests reanalyzed in detail were 10282 (24 km/h test) and 10285 (16.1 km/h test).

[65] O'Brian-Mitchell, Bridget M., Lange, Robert C., "Ejection Mitigation in Rollover Events—Component Test Development," SAE 2007–01–0374.

2. Comments

There was general support from the vehicle manufacturers and suppliers for using a linear impactor and performance metric based on the displacement of that impactor in a compliance test. There were only a few comments on the impactor dimensions and mass. These few comments were in favor of the proposed mass. While VW and others had comments on the impact energy imparted by the mass, which is an issue which will be addressed in a later section below, VW stated that "the 18 kg mass for the impactor is well established * * *" The Alliance referenced the fact that the GM test procedure for ejection mitigation uses an 18 kg linear impactor in stating that "[t]he Alliance supports the use of the 18 kg headform proposed in the NPRM."

Some parties commented on the design of the headform. Takata stated that simulated animations have shown relative movement of head skull and headform, and that "the incomplete fixation of the head skull is influencing the displacement behavior of the head form [sic]." Takata suggested enlarging the head skull fixation in the lower portion, by adding a skull cap or enlarging the chin area in the rear for example. Similarly, TRW said that it found that the headform skin can become dislodged from the skull during testing and suggested using a backplate of smaller size on the headform to better clamp the headform skin flange to the skull. TRW also said that the headform skin can become displaced from the lower (chin) area of the skull.

AORC recommended that NHTSA adopt specifications for the skin stiffness, skin friction coefficient, and skull surface finish, to address the headform skin partially dislocating on the headform as a result of friction between the countermeasure and the headform.

TRW suggested changes to the preparation of the headform for testing. It stated that frictional attributes of the headform skin affect the manner in which the headform interacts with the rollover curtain, so talc, chalk, or other coatings could affect test results. TRW suggested that the standard specify that "no coatings shall be applied to the headform skin during testing" and asked, as did AORC, that the standard specify that prior to the test, the headform skin must be cleaned (TRW suggested cleaning the headform with isopropyl alcohol). TRW suggested changes to the headform drawing package to address: The outer surface finish requirements of the skull; the thickness tolerance and durometer hardness of the skin; inner/outer surface finish and tolerance requirements of the skin material type and material properties corridor for the skin; the definition of frictional characteristics of the skin, including the performance corridor; and test procedure and measurement technique for frictional characteristics of skin.

3. Agency Response

We are adopting an 18 kg headform substantially similar to the device described in the NPRM.

We are declining Takata's and TRW's requests to add a skull cap or modify the backplate of the headform. The modification is unnecessary as the new headform has not exhibited the problem these commenters describe. Further, the effect of the modification on actual test results has not been quantified by the commenters. Using modeling, Takata estimated about a 3 mm increase in displacement between the proposed headform and one with the suggested modification, but it is not clear this modeling is representative of an actual impact test.

NHTSA is not inherently opposed to improvements in the headform design to possibly allow for a longer period of head skin use before it needs to be replaced. However, it has not been shown that there is a need to improve the headform at this time. If improvements are feasible and the effect of changing the headform on ejection mitigation countermeasure performance can be better assessed, we are open to considering fine-tuning adjustments to the headform at a future date.

With respect to TRW's comments about the additions and revisions to the drawing package, the NPRM's drawing package already included specifications for the skin material type, thickness and durometer. It also included a specification for preparing the outer surface finish of the skull. TRW did not provide any reason to change these specifications, so they will remain as proposed in the final rule.

We deny TRW's other requests that we specify the inner/outer skin surface finish, skin frictional characteristics, friction performance corridor and friction measurement technique. We do not believe there is a need for these specifications. NHTSA has not before found a need to specify skin surface finish and frictional characteristics for test dummy skin. The commenter provided no justification as to why the material properties provided were insufficient or how the requested parameters would improve the objectivity of the standard.

We are denying the request to place a requirement in the regulatory text to clean the headform skin with isopropyl alcohol as per FMVSS No. 201, "Occupant Protection in Interior Impact." The commenters provide no data showing the necessity of such provision. FMVSS No. 201 has no requirement that the free motion headform be cleaned with alcohol prior to the testing. There is no FMVSS that specifies in the regulatory text that the dummy skin should be cleaned prior to vehicle testing.

b. Measurement Plane and Displacement Limit (100 mm)

1. NPRM

We proposed that the linear travel of the impactor headform must be limited to 100 mm from the inside of the tested vehicle's glazing as measured with the glazing in an unbroken state. The 100 mm boundary would be first determined with the original glazing "in position" (up) and unbroken. Then, for the test, the original glazing would be in position but pre-broken if it were advanced glazing; or down or removed altogether if it were tempered glazing. It was proposed that advanced glazing would be in position but pre-broken for both the 1.5 second test and the 6-second test.

The NPRM included a window-breaking procedure that damages but does not destroy advanced glazing, while it will obliterate tempered glazing. It was proposed that vehicle manufacturers may remove or completely retract tempered glazing since it would be destroyed in the pre-breaking procedure and would have no effect on the ejection mitigation results. When tested with the original glazing in position but pre-broken or with the glazing removed, the linear travel of the impactor headform must not exceed the 100 mm limit. If a side curtain air bag is present, and we anticipate that most, if not all, vehicles will have an ejection mitigation curtain, the curtain would be deployed.

In the test, the ejection mitigation countermeasure must prevent the headform from exceeding the 100 mm limit. The principle underlying the 100 mm displacement limit is to ensure that the countermeasure does not allow gaps or openings to form through which occupants can be partially or fully ejected. In the research tests, targets that had displacements of less than 100 mm did not allow ejections in dynamic testing.

In research tests, the TRW and Zodiac prototype ejection mitigation countermeasures were tested on a CK

pickup to the proposed impactor test procedure.[66] The TRW prototype had no coverage at position A1 (front window forward lower position). These systems were later tested on the DRF with the 50th percentile male, 5th percentile female and 6-year-old dummies in upright seating positions, and a prone 6-year-old dummy aimed at approximately the target positions A1 and A2 (front window rear lower position). When tested on the DRF, the arms of the upright dummies flailed out of the window opening up to the shoulder at the sill (A1 and A2) and the prone 6-year-old dummy was completely ejected at A1.

We recognize that dummy ejection did not occur all the time at targets that had displacements of over 100 mm. When tested with pre-broken laminated glazing, at position A1, the TRW system had 181 mm of displacement at the 24 km/h (1.5 second delay) test and 104 mm of displacement in the 20 km/h (1.5 second delay) test, but did not eject either the prone or seated dummies in DRF tests. Nonetheless, the component and DRF testing indicated that there was an increased likelihood that an opening could be formed between the curtain and the window opening through which an occupant could be ejected if the displacement were over 100 mm in the headform test. In addition, a 100-mm limit would also help guard against the countermeasure being overly pliable or elastic so as to allow excessive excursion of an occupant's head and shoulders outside of the confines of the vehicle even in the absence of a gap.[67]

NHTSA also noted in the NPRM that a 100-mm performance limit is used in several regulations relating to occupant retention. In FMVSS No. 217, "Bus emergency exits and window retention and release," (49 CFR 571.217), bus manufacturers are required to ensure that each piece of glazing and each piece of window frame be retained by its surrounding structure in a manner that prevents the formation of any opening large enough to admit the passage of a 100-mm diameter sphere under a specified force. The purpose of the requirement is to minimize the likelihood of occupants being thrown from the vehicle. This value is also used in FMVSS No. 206, "Door locks and door retention components," (49 CFR 571.206, as amended 69 FR 75020), to mitigate occupant ejection through unintentional door openings in a crash. In FMVSS No. 206, the door is loaded with 18,000 N of force and the space between the interior of the door and the exterior of the door frame must be less than 100 mm.

In addition, NHTSA also considered that a value of approximately 100 mm is used by the International Code Council (ICC) in developing building codes used to construct residential and commercial buildings.[68] The ICC 2006 International Building Code and 2006 International Residential Code require guards to be placed around areas such as open-sided walking areas, stairs, ramps, balconies and landings. The guards must not allow passage of a sphere, 4 inches (102 mm) in diameter, up to a height of 34 inches (864 mm). The ICC explains in the Commentary accompanying the Codes that the 4-inch spacing was chosen after considering information showing that the 4-inch opening will prevent nearly all children 1 year in age or older from falling through the guard.

The NPRM noted that GM has developed a test procedure that uses a 100 mm displacement limit but in GM's procedure, the zero displacement plane is a plane tangent to the exterior of the side of the vehicle at the target location.[69] [70] Displacement is measured perpendicular to this excursion plane. Thus, the allowable GM displacement is approximately 100/cos(θ) mm, with θ being the angle with the vertical of the exterior plane, if other aspects of the test were identical to those of the NPRM. If θ were 20 degrees, the GM limit would be approximately 106 mm. The GM method also results in a slightly different allowable final displacement position than the proposed method because of the separation between the flat excursion plane and the inside surface of the window at the target location.

2. Comments

There was general support for the use of a linear impactor as opposed to some other impacting device and performance metric based on the displacement of that impactor.[71] However, many commenters had opinions about the 100 mm performance limit and how the displacement should be measured. In general, the net effect of the vehicle manufacturers' requests was to increase the allowable displacement, while that of the glazing manufacturers and consumer groups was to reduce it.

Both the Alliance and AIAM suggested that the final rule measure displacement from an initial reference point other than the point of contact of the headform with the glazing. Both requested that a method similar to that used by GM be used. This measurement method defines a line tangent to the side of the vehicle at the window opening. (We note that although the Alliance calls the longitudinal plane that passes through this line the excursion plane, see Figure 5, extracted from the Alliance comments, there would likely be a unique excursion plane at every target location due to the curvature of the vehicle sides.)

Under the Alliance method, the headform contact with the excursion plane for that target location defines the point of zero displacement. The Alliance explained this zero plane by stating that "the risk of injury is more closely tied to the amount of occupant excursion from the outside of the vehicle's structure as opposed to the side glass." The AIAM stated that its procedure "takes into account the shape of the vehicle body near the side windows and the contribution the body makes in providing additional space before the occupant contacts the ground."

The Alliance and AIAM methods differ after the zero excursion plane is determined. For the Alliance, the maximum excursion plane is defined by translating the excursion plane 150 mm laterally. The point of contact of the headform with the maximum excursion plane provides the limit on displacement. The Alliance justifies its request for a 150 mm excursion limit by stating "that the impactor mass and impact energy are based on the 50th male." Therefore, it believes that "a 150 mm excursion limit based on the diameter of a 50th percentile male head (Hybrid III—153 mm, WorldSID = 159 mm, Featureless = 177 mm) is more appropriate." The Alliance and Volvo commented that excursion should not be based on the size of a child's head and impact energy of an adult male. For the AIAM, the maximum excursion plane is defined by translating the

[66] There were only some slight variations in target locations.

[67] The agency further notes that an advantage to the displacement limit is that the linear displacement of the headform can be measured in a practicable and relatively straightforward manner, unlike a real-time dynamic measurement of a gap during an impact.

[68] The ICC is a nonprofit membership association that works on developing a single set of comprehensive and coordinated national model construction codes. *http://www.iccsafe.org/news/about/*.

[69] O'Brian-Mitchell, Bridget M., Lange, Robert C., "Ejection Mitigation in Rollover Events—Component Test Development," SAE 2007–01–0374.

[70] GM explained that its justification for the 100 mm displacement limit is that it represents half the height of the 50th percentile male Hybrid III head.

[71] This is aside from commenters who want the agency to use a completely different test method, i.e., full vehicle dynamic rollover.

excursion plane by 100 mm along a line normal to the excursion plane, rather than 150 mm laterally.

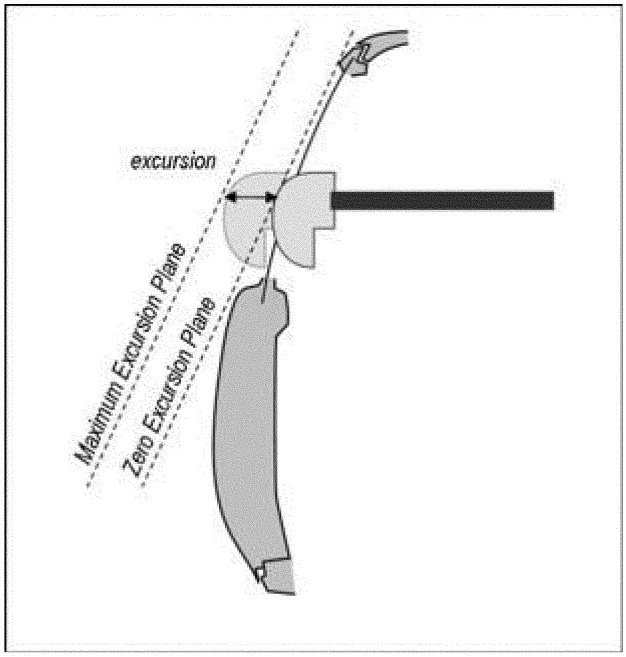

Figure 5 - Alliance Displacement Measurement Method.

Honda agreed with the 100 mm displacement limit in the NPRM because it believes it to be appropriate to account for the size of a child's head. It also agreed that the horizontal measurement of the impactor displacement was appropriate because of its "feasibility and measurement accuracy." However, Honda concluded "that the proposed procedure * * * doesn't accurately simulate the degree of ejection toward the outside of the vehicle."

Honda suggested that the measured displacement should begin at the same location as proposed in the NPRM, i.e., the point of contact of the headform with the inside surface of the glazing. However, Honda suggested drawing a line normal to the glazing at the target center.[72] The window cross-section in the lateral plane is then projected 100 mm along the normal line. The headform is then translated laterally and horizontally until it contacts the projected window cross-section, which provides the limit of displacement.

TRW agreed with the measurement method and excursion limit of 100 mm, with one caveat. The commenter noted that "during an impact test, there can be considerable deflection of the door/window frame, door structure, door hinges, etc." TRW stated that "[s]ince the objective of the Standard is to limit headform displacement to no more than 100mm beyond the zero displacement plane, movement of the plane due to the door system deflection should be considered during the test."

IIHS suggested that the 100 mm displacement limit might be unnecessarily small. It stated that "[s]electing this value based on its use in other safety standards with very different test conditions or in building codes for guardrails on balconies and stairs may be unreasonable." IIHS indicated that the 12 vehicles tested by NHTSA, as reported in the NPRM, would have failed to comply with the 100 mm displacement limit, yet "the crash performance of these vehicles has not been assessed to demonstrate a need for improved ejection mitigation systems." IIHS also stated that the potential negative effects of requiring air bags to be stiffer to meet a 100 mm displacement requirement are unknown.

In general, glazing suppliers recommended that the final rule use the passage of a 40 mm sphere to assess any gaps in the countermeasures. They suggested we use industry standards published by the Society of Automotive Engineers (SAE), SAE J2568, "Intrusion Resistance of Safety Glazing Systems for Road Vehicles," or by the British Standards Institution (BSI), BSI AU 209, "Vehicle Security," which provide glazing intrusion resistance requirements from external impact (as opposed to ejection mitigation). These industry standards specify that after testing there must not be separation within the glazing or between the glazing and vehicle body that would allow for passage of a 40 mm diameter sphere. The EPGAA stated that it is necessary to "specify a maximum opening after impact in addition to an excursion limit to adequately address the remaining gaps leading to partial ejections." It goes on to state that "NHTSA currently requires gap quantification limitation for windshields to resist occupant ejection in FMVSS [No.] 205, which mandates compliance with ANSI/SAE Z26.1 where glazing tears are measured and limited after impact." In contrast, Batzer and Ziejewski indicated that the 100 mm displacement appeared appropriate.

[72] Honda's diagram in its comment shows a line projected from the point of contact with the window, rather than the target center. (The target or target outline was defined in the NPRM as the x-z plane projection of the ejection headform face. The center of the target outline would be the target center.) We assume the graphic represents the intent of Honda's comment. The line emanates from the point of glazing contact with the headform. Honda also stated that the line projected from the point of contact is normal (perpendicular) to the window. However, most side windows curve out of the longitudinal vehicle plane and any normal to the window would not be contained in a lateral plane. Thus, we have assumed that only the component of the normal line in the lateral plane is of interest, i.e., only the line normal to the lateral cross-section of the glazing.

Advocates suggested that the proposed displacement limit be reduced by 50 percent, to 50 mm. It stated that a 100 mm displacement limit "allows enough excursion to permit serious injuries and deaths outside the vehicles. The 4-inch limit also devalues the major contribution that advanced glazing can make to reduce the chances of occupant ejections, including excessive occupant excursion outside side windows."

3. Agency Response

NHTSA does not agree with the requested changes to the displacement measurement method from the vehicle manufacturers and TRW, which would all effectively increase the allowable displacement. We also disagree with the additional post-impact gap measurement suggested by the glazing suppliers. We also do not concur with the requests of some commenters to increase the displacement limit, and of some to reduce it. We believe that the 100 mm limit strikes the appropriate balance between stringency and practicability. We address the issue of stringency and practicability further in a later section on the time delay of the impacts and impactor velocity.

Suggested Methods Would Increase the Displacement Limit

We do not believe that the methods suggested by the commenters provide a better method of measuring the performance of the ejection countermeasure. No data was presented to support why the suggested methods are preferable to the method proposed in the NPRM.

In the NPRM and the technical analysis supporting the NPRM, the agency estimated that the GM measurement method allowed about 6 percent more displacement than the proposed method of measurement. Below we analyze the displacement measurement methods requested by the commenters and compare the associated performance limits of the respective methods to the performance limit discussed in the NPRM. For this comparison, we used a graphical representation of a two dimensional lateral cross-section of the headform contact with the side window. For convenience, we used an approximation of the headform profile rather than the exact cubic equation prescribed in the NPRM. The vehicle cross-section included the window as well as the structure in its vicinity.

Figure 6 shows how the 100 mm displacement put forward in the NPRM is measured from the contact point of the headform at the A2 target point with the side window glazing. In this example, the lateral cross-section A–A of the glazing is represented by a 15 degree arc segment having a 201 cm radius, with the base of the arc oriented approximately 7 degrees from the vertical.

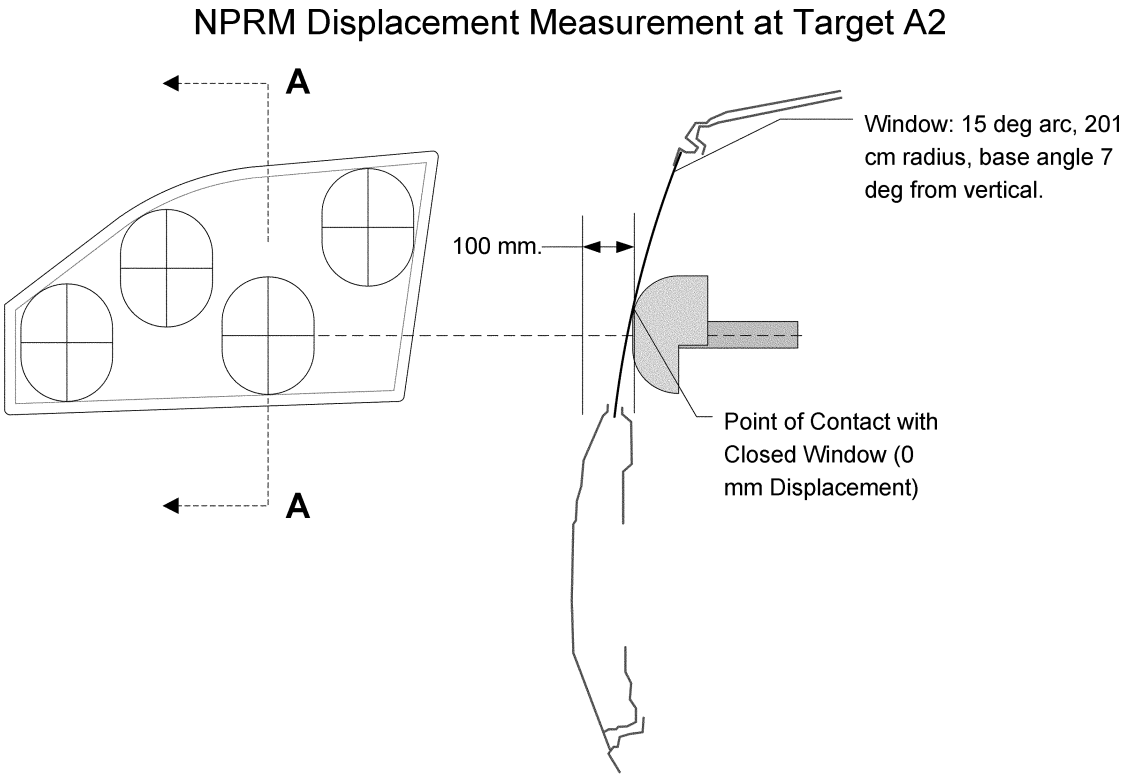

Figure 6 – NPRM Displacement Measurement at Target A2

Figure 7 shows the displacement measurement methods that Honda and the Alliance recommended in their comments. In the Honda method, the lateral cross-section of the glazing is projected 100 mm along the normal line at the point of contact of the headform. Using the Honda method, the headform's horizontal displacement at the A2 target is 101 mm from the NPRM zero displacement point. The Alliance-recommended measurement method defines a line tangent to the side of the vehicle at the window opening as the zero excursion plane. The maximum excursion plane is defined by translating the excursion plane 150 mm laterally. Using the Alliance method, the headform's horizontal displacement at the A2 target is 161 mm from the NPRM zero displacement point. This 161 mm value is the sum of the 11 mm distance between the contact point with the window and the excursion plane (Δ excursion plane) and the 150 mm

additional displacement to the maximum excursion plane.[73]

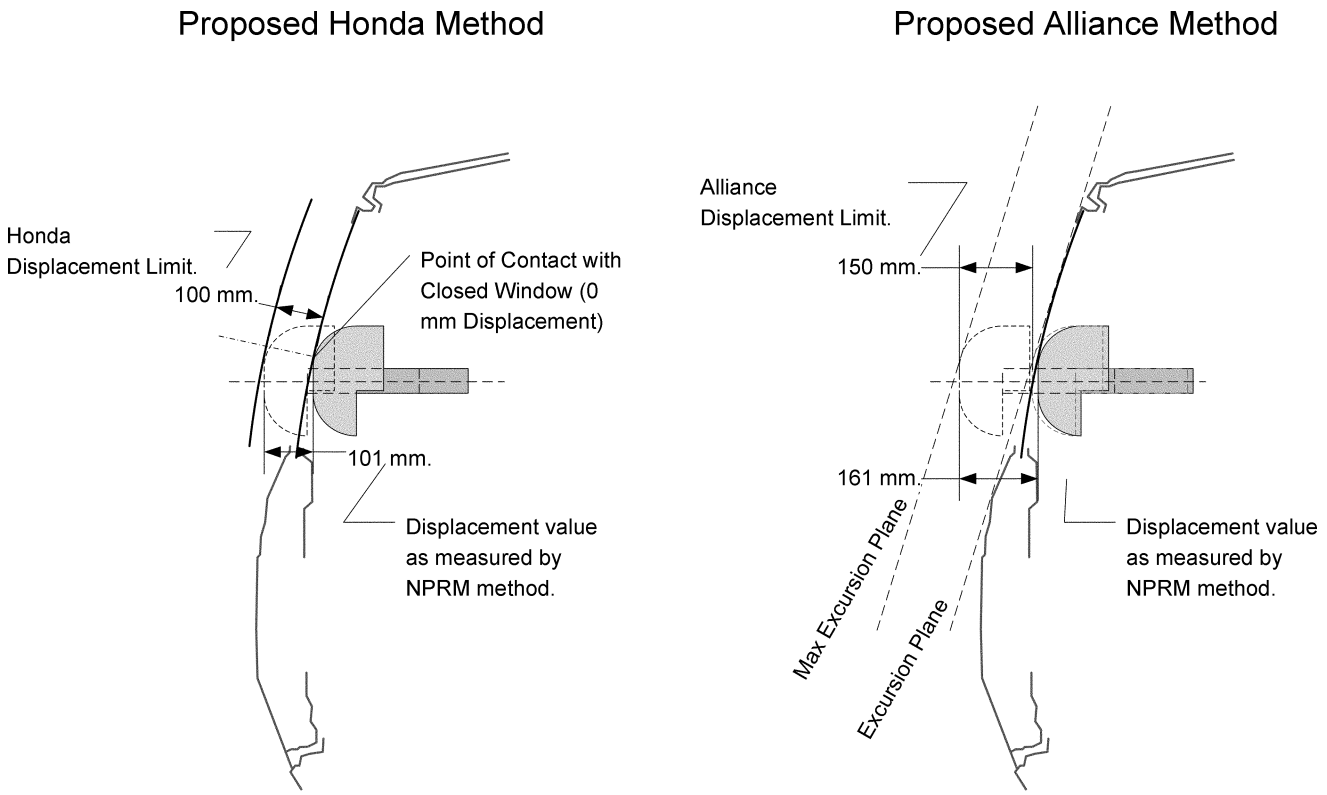

Figure 7 – Suggested Honda and Alliance Methods at Target A2

AIAM also recommended a displacement measurement method similar to the Alliance method in that an excursion plane is located tangent to the side of the vehicle window opening. However, the maximum excursion plane is defined by translating the excursion plane by 100 mm along a line normal to the excursion plane rather than 150 mm laterally.

Because of the similarities between the Alliance and AIAM methods, once the angle of the excursion plane is known, a simple mathematical relationship can be used to calculate the AIAM displacement limit with respect to the NPRM measurement method from the limit determined by the Alliance method. From Figure 7 we see that the excursion angle is 17 degrees from the vertical. Thus, the horizontal translation of the AIAM maximum excursion plane is 105 mm = 100/cos(17 deg.). The total AIAM displacement allowance from the headform when in contact with the window plane is the sum of the Δ Excursion Plane (11 mm) plus the horizontal translation of the excursion plane (105 mm), resulting in a value of 116 mm at target A2.

The displacement measurement methods suggested by Honda, the Alliance, and AIAM are all more sensitive to the particular target location, the curvature and angle of the window, as well as the profile of the vehicle structure around the window opening, than the NPRM method. Figure 8 shows the NPRM displacement measurement at target A4 for a side window having twice the base angle (13 degrees) as the previous example. The window curvature remains the same. Figure 9 shows a graphical determination of displacement measurements for Honda (109 mm) and the Alliance (156 mm) at A4. Using the mathematical transformation described above, we calculate the AIAM value (114 mm).

[73] In doing this analysis, we have assumed that the point of contact with the glazing is along the centerline of the headform. If we did not, the difference between the NPRM method and the Alliance and AIAM proposals would be even greater.

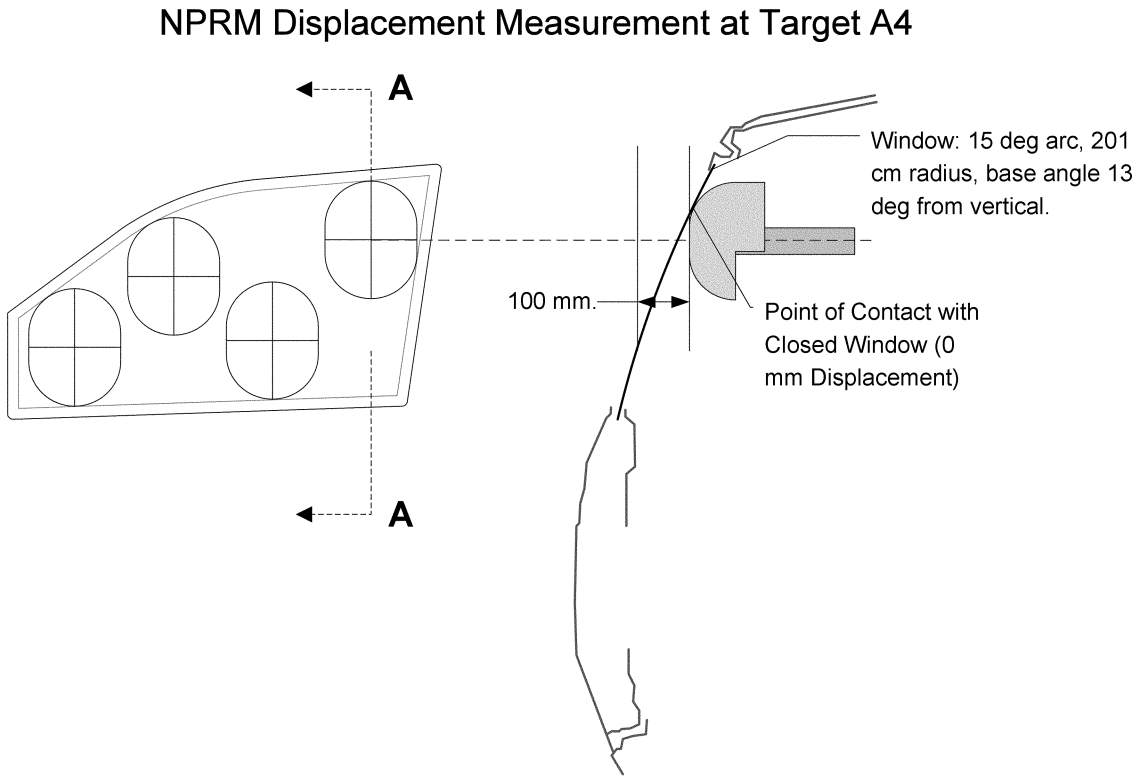

Figure 8 – NPRM Displacement Measurement at Target A4

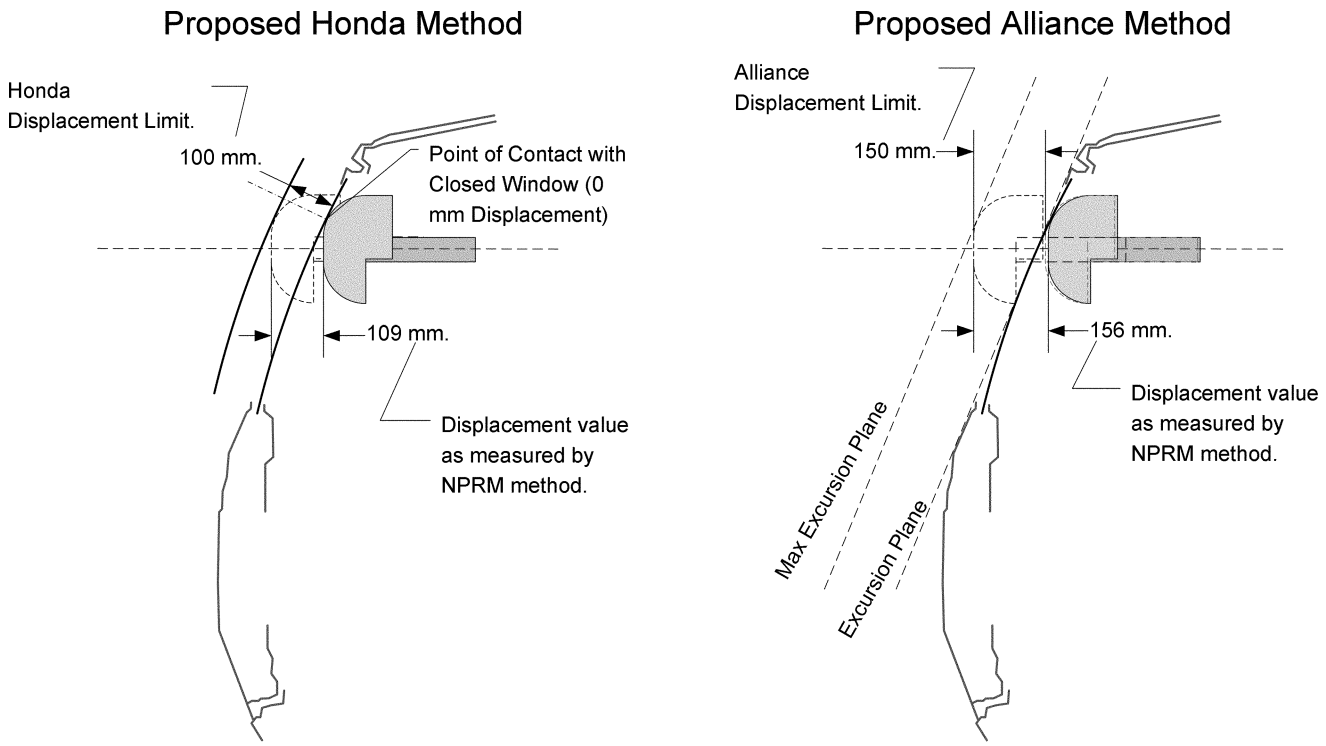

Figure 9 - Suggested Honda and Alliance Methods at Target A4

The same exercise was performed for target position A2 with a 13 degree window and for target position A4 with a 7 degree window. Figure 10 shows the displacement limits calculated for the three commenters' methods at target positions A2 and A4 with a 7 and 13 degree window, subtracted from the 100 mm limit in the NPRM. The Honda

method provides the smallest differential with the NPRM method (1 to 9 mm), the Alliance method provides the largest (55 to 61 mm). Again, the results will vary for other target locations and window/vehicle geometries. However, there does not appear to be a situation where any of the suggested methods will result in a lateral displacement limit of less than 100 mm. That is, each suggested method would reduce the stringency of the test by permitting the openings to be greater than 100 mm. As explained in the section below, this we cannot accept.

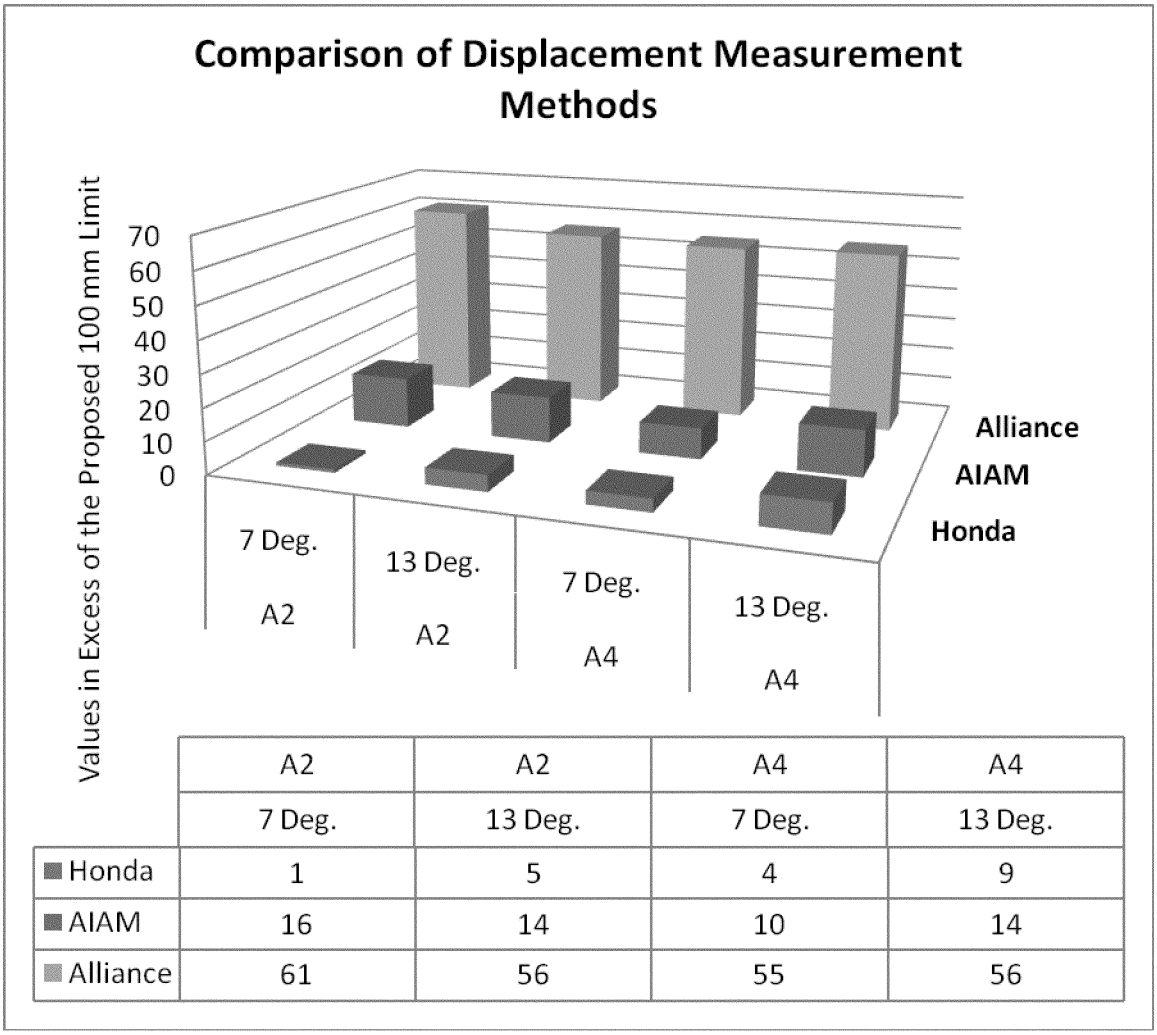

	A2	A2	A4	A4
	7 Deg.	13 Deg.	7 Deg.	13 Deg.
Honda	1	5	4	9
AIAM	16	14	10	14
Alliance	61	56	55	56

Figure 10 – Comparison of Displacement Measurement Methods

TRW requested allowing the zero reference plane to move with the door frame. We are declining this request. It is unclear to us why allowing the reference plane to move in the manner suggested is preferable from a safety standpoint than simply maintaining the position of the zero plane with respect to ground. The latter (NPRM) method is preferable because the door frame provides a reaction surface for the curtain air bags or advanced glazing. The door frame is part of the system designed to retain the occupant in the vehicle. If the zero reference plane is tied to movement of the door frame, a weak door frame could render the displacement limit meaningless. For example, under the TRW method, a vehicle that allows an impactor displacement of 150 mm with 50 mm of door deflection would be considered compliant, as would a vehicle that allows an impactor displacement of 100 mm with 0 mm of door deflection.

Further, the TRW suggestion would also add a significant amount of complexity to the testing. There would need to be a determination as to the sufficient number of measurement locations on the door and how the agency would assess movement of the door frame. The suggestion requires further study to properly integrate it into the test procedure and we are unable to conclude that use of our resources to pursue the matter would be warranted.

Unrealistic Assumptions

The methods of measurement suggested by the Alliance, AIAM and Honda are dependent on assumptions about the performance of the vehicle that may not be realistic. The Alliance and AIAM methods are very similar. Both these methods use a tangent to the side of the vehicle (zero excursion plane), translated some distance, as the limit of displacement (maximum excursion plane). The assumption apparently is that occupant excursions within this zone will be protected.

We do not agree with this assumption. For example, if vehicle A's exterior skin protrudes farther outboard than vehicle B's, but A's protruding exterior skin consists of only sheet metal or plastic or

some like material that provides little if any crush resistance, we do not agree that A's maximum excursion plane should be farther outboard at the bottom of the window opening than B's. More displacement of the headform would be permitted for vehicle A even though in a real-world crash, A's exterior skin could be easily leveled. Since the countermeasure of A would be permitted to allow more headform displacement outside of the window plane than that of B, the suggested approach would provide A's occupants less minimal protection in a rollover or side impact than the NPRM approach.

Relatedly, when the excursion plane is derived from the undeformed vehicle structure, if the roof structure has significant lateral deformation after impact, the original excursion plane may have very little relevance to occupant protection.

With Honda's method, it seems there is an underlying assumption that if ground contact occurs with the vehicle rotated 90 degrees, the door structure will be the initial point of contact, so that targets near the upper part of the glazing on a vehicle with a highly inclined/curved glazing could be permitted to displace farther than targets at the center. Under this method, the greater the inclination and/or curvature of the glazing in the lateral plane, the more displacement is allowed compared to the NPRM's approach (9 percent more at A4 with the 13 degree glazing). A vehicle with a more highly inclined glazing would be allowed more headform displacement at the top and bottom of the window compared to the NPRM. Given the unpredictable nature of rollover crashes, we cannot agree with this assumption. A vehicle might be rotated greater than 90 degrees during ground contact, resulting in initial contact near the upper glazing. Thus, to allow more displacement at the top of the glazing relative to the initial glazing position does not seem warranted.

Adding Complexity

The measurement methods suggested by the Alliance, AIAM, Honda and TRW are more complicated to implement than the method proposed by the agency. The NPRM's method of measuring displacement is actually very simple and straightforward. The point of zero displacement is simply the contact point with the side window glazing. From there, it is only necessary to keep track of how far the linear impactor translates along its axis of motion. No digitization or CAD techniques are required. To find the zero displacement point for the Alliance or AIAM method, one must hold a relatively thin straight edge in a lateral vehicle plane, aligned with the target center, against the outside of the vehicle. Headform contact with this straight edge defines the point of zero displacement. This can be done by digitizing the exterior of the vehicle. However, it is somewhat more onerous than the NPRM method. The Honda method is just as simple as the NPRM method in finding the point of zero displacement, but after that, we believe the method would require a digitization of the glazing. This digitized glazing would then need to be manipulated in a CAD program to determine the allowable displacement. The complexity of the TRW method has been discussed above.

Increasing the Displacement Limit

The agency is declining the requests to increase the allowable displacement limit.

The Alliance and Volvo believe the limit should not be based on the size of a child's head and the impact energy of an adult male. (In contrast, Honda commented that basing the requirement on the size of a child's head was appropriate.) We disagree with the Alliance and Volvo on this point. It is reasonable for the agency to adopt a displacement limit based on the anthropometry of a child since the standard is intended to mitigate ejection of all sizes of occupants, not just the mid-size male. It is possible for a child occupant to interact with an ejection mitigation countermeasure with relatively high impact energy if a large portion of their mass is considered. For example, an average 5-year-old child weighs about 18 kg (the same mass as the linear impactor). Due to the size of this child relative to a window opening, it would be much easier for their entire body mass to interact with the window opening than it would be for an adult. Also, the ejection mitigation countermeasure could be double-loaded by more than one occupant simultaneously during the rollover event, *e.g.,* a child in the rear seat and the driver in the front seat or two unbelted occupants in the same row. The 100 mm limit reduces the likelihood that openings will form during the rollover that are large enough to pass the head or other body part of a child or an adult.

The principle underlying the 100 mm displacement limit is to ensure that the entire window opening is covered, and covered by a countermeasure resilient enough to withstand the forces that could be imposed on it in a rollover without forming gaps or openings.[74] We chose a 100 mm displacement limit as a reasonable and objective measure of acceptable performance, taking into account the practicability of meeting the displacement limit, safety need, and the SAFETEA–LU goal of a standard that reduces complete and partial ejections of vehicle occupants. We adopt a displacement limit that will ensure that the countermeasure covering the entire window is wide enough and strong enough to mitigate ejection of a child's head, limb or body, or those of an adult, in the chaotic and unpredictable phases of a rollover.

IIHS believed that the NPRM selection of 100 mm displacement, partially based on other standards (FMVSS Nos. 206 and 217) and building codes, may be unreasonable. It noted that the vehicle testing reported in the NPRM did not show any that passed all the target points at 100 mm of displacement even though the field performance of these vehicles may be acceptable. IIHS stated that if the displacement requirement is too stringent it will lead manufacturers to make their air bags too stiff, with unknown consequences from this increased stiffness.

We understand the merits of having extensive field data that correlates the performance in the proposed test against ejection mitigation in the field. At the time of the NPRM development, there were very few rollover curtain-equipped vehicles in the available field data and the vehicles then-tested by the agency were not designed to have full window coverage as the NPRM requirements contemplated. Now more field data is available to us, and we have tested many more vehicles some of which have been designed to have extensive window opening coverage. However, the data set is still insufficient to correlate various displacement values and field performance.

Nonetheless, we do not accept IIHS's argument that the 100 mm value may be unreasonable because the value is used in FMVSS No. 206 and 217 and in the architectural code. These other standards and the architectural code referenced by the agency have basically the same purpose: retaining occupants, including children, in a vehicle in a crash event, or retaining children behind a barrier (railing). These precedents are supportive of the selected value. They were developed taking into consideration the size of children's heads and limbs and the ease or difficulty with which the parts can fit through openings. If the window opening countermeasure can limit the

[74] 74 FR 63193.

opening to 100 mm when impacted by the headform at the prescribed velocities, the countermeasure is more likely to be able to restrict the opening as needed when impacted by a lower mass at the same or higher velocity, or the same or larger mass at a lower velocity.

Requests to Decrease Displacement Limit

Advocates suggested that the proposed displacement limit be reduced by 50 percent to 50 mm. It believed that such a stringent requirement will "ensure dramatic reductions in occupant ejection, including partial ejection * * *." It stated further that the proposed 100 mm value "devalues the major contribution that advanced glazing can make" and that more lives would be saved by "a standard that effectively would encourage the use of advanced glazing in combination with air curtains * * *."[75] The suggestion to reduce the displacement limit was made by other commenters as well, including glazing manufacturers.

NHTSA does not believe that the level of stringency requested by Advocates and others is warranted. We believe that the 100 mm limit will be highly effective in the reduction of both complete and partial ejections. Certainly, ejections will continue in situations where the severity of the crash and resulting occupant energy will overwhelm the capacity of the countermeasure. However, the 100 mm limit strikes the appropriate balance between stringency and practicability.

There is no available data that can correlate various displacement values with field performance at this time. We cannot conclude that reducing the displacement limit by 50 percent will reduce ejection or side impact fatalities and injuries by a corresponding amount. The commenters did not provide data on this issue. On the other hand, we can estimate possible costs of indirectly requiring advanced glazing to be installed at side windows to meet a 50 mm displacement limit. In the FRIA, we estimated that the incremental difference in costs for going from tempered glass to laminated advanced glazing for a standard size side window in the first or row is $15. Thus, for a two row vehicle the total incremental cost would be $60. In addition, we believe that any costs associated with advanced glazing must be combined with the curtain bag incremental cost since a system with movable advanced glazing alone would not be able to perform to the level required for this standard. In comparison, the agency has determined that incremental cost of meeting the final rule with only curtain air bags will be $31 dollars per vehicle. The cost per equivalent fatality of a system comprised of a partial curtain in combination with laminated glazing was twice that of a system utilizing only a curtain.

Requests To Add Another Requirement

Many glazing manufacturers were in favor of applying an additional post-impact requirement in which a 40 mm sphere is used to determine the size of any remaining gaps. According to the commenters, this requirement would be intended to eliminate gaps that can exacerbate partial ejections. It is our interpretation of the comments that this test is to be applied to all vehicles, i.e., those using a combination of advanced glazing and side curtain air bags to meet the standard, and those using only side curtain air bags.

We do not agree with this suggestion. First, the requirement is not appropriate for vehicles with only side curtain air bags, given that there is a time dependence associated with a curtain's ejection mitigation performance. Once deployed, the pressure in the air bag continuously decreases. The 16 km/h test is done at 6 seconds to assure that the pressure does not decrease too quickly. It does not seem that the 40 mm gap test could be done after the 6-second impact, in any timeframe which is related to rollover and side impact ejections. Second, there is no shown safety need for the requirement. We cannot show that ejections that would not be prevented by the primary 100-mm displacement requirement would be prevented by a secondary 40-mm requirement. Third, it would seem that the 40-mm requirement would indirectly require installation of advanced glazing. As discussed above, the costs associated with advanced glazing installations at the side windows covered by this standard are substantial in comparison to a system only utilizing rollover curtains. For these reasons, the agency does not accept this suggestion.

c. Times and Speed at Which the Headform Impacts the Countermeasure

We have determined that there is a need for a relatively high speed impact shortly after countermeasure deployment and a lower speed impact late in the deployment. The two time delays correspond to relatively early and late times in a rollover event.[76] The first impact is at 20 km/h, and at 1.5 seconds after countermeasure deployment (1.5 second time delay). (The 20 km/h speed is reduced from the NPRM's proposal of 24 km/h; the rationale for which is discussed later in this preamble.) The second is a 16 km/h impact initiated 6 seconds after deployment.

1. Time Delay (Ejections Can Occur Both Early and Late in the Rollover Event)

i. NPRM

Two impacts were proposed because ejections can occur both early and late in the rollover event. In the advanced glazing program, NHTSA performed a series of simulations to recreate three NASS-investigated rollover crashes with ejected occupants.[77] The vehicles were a MY 1991 Toyota pickup, a MY 1986 Toyota Corolla and a MY 1985 Volkswagen Jetta.[78] Vehicle handling simulation software[79] reconstructed the vehicle motion up to the point where the vehicle started to roll. The linear and angular velocity at the end of the vehicle handling simulation was then used as input to a MADYMO[80] lumped parameter model of the vehicle to compute its complete rollover motion. The motion of the vehicle obtained from the MADYMO vehicle model was used as input to a MADYMO occupant simulation. Head and torso velocities of a Hybrid III 50th percentile male driver dummy were calculated for the three rollover simulations.

Table 30 shows the simulation resultant head velocity through the open window at the time of ejection. As indicated in the table, for the unrestrained simulations, the occupant of the pickup was completely ejected early (1st quarter-turn for Toyota truck) while the occupants of the other vehicles were ejected late (last quarter-turn for Corolla and Jetta) in the rollover event.

[75] NHTSA–2009–0183–0022, p. 3.

[76] Each impact takes place on a test specimen (e.g., a curtain) that was not previously subject to an impact test.

[77] "Ejection Mitigation Using Advanced Glazings: A Status Report," November 1995, Docket NHTSA–1996–1782–3. Pg. 6–1.

[78] The circumstances of the Toyota pickup rollover was that the vehicle was traveling at 96 km/h and went into a sharp turn and yaw, which resulted in a rollover. In the case of the Corolla, it was also traveling 96 km/h on a gravel road. The vehicle went out of control and left the road, resulting in roll initiation. The Volkswagen was traveling at 88 km/h when the driver fell asleep and the vehicle left the road. It struck a rock embankment and rolled over.

[79] VDANL software user's manual V2.34, STI, 1992.

[80] MADYMO user's manual V5.1, TNO, 1994.

TABLE 30—HEAD AND TORSO VELOCITIES OF A HYBRID III 50TH PERCENTILE MALE DUMMY IN 3 ROLLOVER SIMULATIONS

Vehicle	Vehicle ¼ turns	¼ Turns at complete ejection	Restraint use	Head to opening (km/h)	Head to glazing (km/h)	Torso to glazing (km/h)
Toyota PU	12		Yes	20	20	7
		1	No	5	20	16
Toyota Corolla (86)	6		Yes	15	15	11
		6	No	13	13	10
Volkswagen Jetta (85)	4		Yes	14	14	10
		4	No	22	18	16

The agency also considered other data indicating that very early occupant contact with the window area is possible in rollover crashes. Table 31 gives information on 30 rollover tests the agency performed from the mid-1980s to the mid-1990s. This data set included Rollover Test Device (RTD) tests, 208 Dolly tests, guardrail tests and pole tests.[81] A film analysis of dummy motion within the vehicles showed that, excluding a pole impact test, occupant contact with the window opening and surrounding area first occurred between 0.16 and 0.88 seconds after the event began.[82] We note, however, that the majority of these dummies were belted, which means they would be most representative of potential partial ejections. In addition, where the time of window breaking is known, most of these first contacts occurred prior to the window breaking due to roof contact.

TABLE 31—NHTSA FULL VEHICLE ROLLOVER TESTING FILM ANALYSIS

Test #	Make	Model	MY	Test type	Tilt angle (deg.)	Roll axis (deg.)	Vehicle speed (km/h)	¼ Turns	Total time (sec)
878	Honda	Accord	84	RTD	41	45	33.8	2	1.29
888	Chevrolet	Celebrity	82	RTD	41	45	37.0	4	3.58
920	Dodge	Omni	79	RTD	41	45	37.0	2	0.96
939	Mercury	Zephyr	82	RTD	41	60	37.0	2	2.08
1255	Ford	Bronco	88	RTD	30	45	37.0	2	1.17
1266	Dodge	Caravan	88	RTD	30	45	48.3	1	0.50
1267	Chevrolet	Pickup	88	RTD	30	45	48.3	4	2.58
1274	Nissan	Pickup	88	RTD	30	45	48.3	6	3.76
1289	Nissan	Pickup	89	RTD	30	45	48.3	2	0.83
1391	Dodge	Caravan	89	RTD	30	45	48.3	8	5.08
1392	Ford	Bronco	89	RTD	30	0	48.3	8	3.60
1393	Nissan	Pickup	89	RTD	30	0	48.3	4	2.35
1394	Nissan	Pickup	89	RTD	30	0	48.3	4	1.33
1395	Pontiac	Grand Am	89	RTD	30	0	48.3	2	1.54
1471	Dodge	Colt	89	RTD	30	90	48.3	2	0.99
1520	Ford	Ranger	88	RTD	30	0	48.3	2	0.75
1521	Dodge	Ram	88	RTD	30	0	48.3	4	1.42
1530	Dodge	Caravan	88	Guardrail	NA	NA	96.6	1	N/A
1531	Nissan	Pickup	88	Guardrail	NA	NA	96.6	4	N/A
1546	Plymouth	Reliant	81	RTD	41	45	33.8	6	3.00
1851	Volvo	240	91	RTD	30	0	48.3	6	2.50
1852	Volvo	740	91	RTD	30	0	48.3	8	3.00
1925	Nissan	Pickup	90	RTD	30	0	48.3	8	3.04
1929	Nissan	Pickup	90	RTD	30	0	48.3	6	2.25
2141	Nissan	Pickup	90	RTD	30	0	48.3	8	4.25
2270	Nissan	Pickup	89	RTD	30	0	48.3	8	3.50
2514	Ford	Explorer	94	208	23	0	48.3	11	5.50
2553	Ford	Explorer	93	208	23	0	48.3	10	N/A
3012	Ford	Explorer	94	208	23	0	48.3	11	N/A
3635	Ford	Explorer	94	208	23	0	48.3	12	5.17
Analysis of 5+ ¼ turn Tests:									
Average							47.2	8.3	3.7
Maximum							96.6	12	5.5
Average +2 standard deviations							55.2	12.3	5.8

[81] These tests were done as part of a research program evaluating full scale dynamic rollover test methods, occupant kinematics, and vehicle responses. The RTD tests were similar to the 208 Dolly test except that the vehicle was initially 4 feet off of the ground instead of 9 inches, and hydraulic cylinders were used to push the vehicle from the cart and produce an initial roll rate. The guardrail tests used a guardrail as a ramp to initiate a vehicle roll. The pole tests rolled a vehicle into a pole. Twenty-four of these were RTD tests on passenger cars, pickups and vans (the RTD testing was not geared towards ejection testing since all of the test dummies were belted), and four were 208 Dolly tests on Ford Explorers. The test films are available at the National Crash Analysis Center (NCAC) at George Washington University (www.ncac.gwu.edu).

[82] "Evaluation of Full Vehicle Rollover Films," 2008, Docket NHTSA–2006–26467.

The agency proposed that the ejection mitigation countermeasure be first tested at 1.5 seconds after deployment of the ejection countermeasure. As indicated earlier in this preamble, slightly less than half of the complete ejection fatalities occur when the vehicle rolls up to 5 quarter-turns.[83] As shown in Table 30, restricting the analysis to the tests with 5+ quarter-turns, the average amount of time to complete 1 full vehicle revolution (4 quarter-turns) was 1.62 seconds with a standard deviation of 0.31 seconds. Thus, the 1.5 second represented a period of time in which one full vehicle revolution occurs in a high energy rollover event. (We also noted that at 1.5 seconds into the rollover, roof contact would likely have occurred, leading to window breaking. Thus, as discussed later in this preamble, we proposed and adopt a requirement that if advanced glazing is present, it is pre-broken prior to this test.)

Additional rationale came from data obtained from the advanced glazing program (*see* Table 32, infra).[84] In that program, NHTSA tested vehicles on the DRF with 5th percentile adult female and 50th percentile adult male test dummies (near and far side).[85] Analysis of dummy head impacts with the glazing in the window opening showed that for the 5th percentile female far side occupant, the time to glazing impact after the DRF began rotating was between 1.3 and 1.8 seconds, which was in the range of two to three quarter-turns of rotation. Additional analysis of the DRF testing is presented later in this preamble.

TABLE 32—DRF TESTING RESULTS

Dummy	Far side impact time (sec.)	Far side impact ¼ turns
5th Female and 50th Male	1.3–1.8	2–3

The agency also proposed that ejection mitigation countermeasures be tested towards the end of a rollover. Data indicated that occupants could impact the window opening as late as 6 seconds after initiation of a rollover involving 5+ quarter-turns. The last three rows of Table 31, *supra,* show the average and maximum number of quarter-turns and the total time of rollovers involving 5+ quarter-turns.[86] This set of data contains 14 such tests. The average and maximum number of quarter-turns are 8.3 and 12, respectively. The average plus two standard deviations is 12.3 quarter-turns. Thus, 12.3 quarter-turns is the 98th percentile value for this subset of data. The average and maximum times to complete the entire rollover event were 3.7 and 5.5 seconds, respectively. The 98th percentile value was 5.8 seconds, which is not much different than the maximum time for the entire data set, which was 5.5 seconds.

Other information we considered also supported a 6-second impact time. The 1988–2005 NASS–CDS showed that rollovers with eleven quarter-turns account for about 90 percent of rollovers with fatal complete ejection, i.e., 10 percent of rollovers with fatal complete ejections have more than eleven quarter-turns. The data set provided in Table 31, *supra,* showed the vehicle that rolled eleven quarter-turns had the longest roll time (5.5 seconds) in the 208 Dolly test.[87]

A factor that the agency considered in determining the time delay for the lower speed impact was the practicability of curtains staying inflated for this length of time. Ford stated that its "Safety Canopy" system stays inflated for six seconds.[88] GM reportedly stated that its side curtain air bags designed for rollover protection maintain 80 percent inflation pressure for 5 seconds.[89] It appeared that a requirement that side curtain air bags must contain the headform when tested six seconds after deployment was realistic and attainable.

ii. Comments on Time Delay

The Alliance and Honda suggested different time delays than that proposed by the NPRM. Both commenters referenced NASS CDS data of the distribution of rollovers by the number of quarter-turns. The 1997–2007 data were presented in the PRIA. These data show that for all rollovers, not just those with ejections, the majority of the rollover population was at 1 to 2 quarter-turns. These commenters stated that since these data show that the cumulative percentage of rollovers is 90 percent at 5 quarter-turns, and 96 percent at 7 quarter-turns, the time delay for the late impact should be greatly reduced. They correlated these 5 and 7 quarter-turn values with the agency's full vehicle rollover test data to arrive at their requested time delays of 3.4 seconds (Alliance) and 3 seconds (Honda).

Guardian requested that NHTSA conduct an analysis of what protection exists under conditions when an air bag does not deploy. The commenter seemed to be concerned that the 1.5 second impact test was not being performed early enough to address ejections in side impacts. It suggested that this may lead to air bag entrapment of partially ejected occupants and that advanced glazing can prevent this.

Advocates was concerned about the test procedure impacting the ejection countermeasure at two discrete times. The commenter believed that the compliance test only takes a "snapshot of air curtain and sensor performance at two brief intervals over the several seconds during which an air curtain is supposed to provide sustained inflation and prevent excursion beyond 4 inches. For example, no sustained inflation is tested between the 1.5 and 6 second tests, when excursion could exceed the 4 inch maximum required by the proposed standard."[90] Advocates stated that a compliant system still may allow excursions beyond 100 mm at other points during the rollover, especially those longer than 6 seconds.

iii. Agency Response

The agency declines to increase or decrease the time delay for the 1.5 second and 6 second impacts. We also

[83] The 50 percent point in the cumulative distribution occurs between 5 and 6 quarter turns.

[84] Duffy, S., "Test Procedure for Evaluating Ejection Mitigation Systems," 2002 SAE Government/Industry Meeting.

[85] For this set of tests, the "near" and "far" side dummy configurations represent the trailing occupants in a rollover. The near side occupant simply means that they were initially placed near the door at what would have been behind the steering wheel, if the steering wheel were present. The far side occupant was moved to an initial position which was towards the centerline of the vehicle. This position could be thought of as a position that a trailing occupant could slide to as a yawed vehicle decelerates in the lateral direction, prior to rollover initiation.

[86] As mentioned earlier, just less than half of the complete ejection fatalities occur when the vehicle rolls up to 5 quarter-turns.

[87] The agency explained in the NPRM that this does not mean that rollover crashes with eleven quarter-turns only take 5–6 seconds. Five to six seconds may be a conservative assumption for this many quarter-turns for some types of rollover events. The 208 Dolly test has a very quick rollover initiation (high initial roll rate); the beginning of the rollover is well defined. This test only represents about 1% of field crashes. Viano, *supra.* The vast majority of field cases are soil and curb trip crashes. Soil trips involve high lateral deceleration in combination with low initial roll rates. Ideally, the curtain air bag should deploy in this early phase when the roll rate is still low but the occupant is moving towards the window due to the lateral deceleration. The rollover has a slow initiation, leading to a need for longer inflation. Therefore, some rollover crashes with less than eleven quarter-turns may have 5–6 second roll times.

[88] *http://media.ford.com/article_display.cfm?article_id=6447* (Last accessed October 6, 2010.)

[89] "Who Benefits From Side and Head Airbags?" (*http://www.edmunds.com/ownership/safety/articles/105563/article.html).*

[90] NHTSA–2009–0183–0022, p. 12.

have decided against adding a third impact test at a later time or performing any testing at time delays between 1.5 and 6 seconds or at a time representative of a side impact.

In developing the time delays in the standard, NHTSA recognized that the majority of occupants exposed to rollover crashes are in vehicles that roll two quarter-turns or less. However, we recognized that the distribution of ejected occupants who are seriously injured (maximum abbreviated injury scale (MAIS) 3+) or killed is skewed towards rollovers with higher degrees of rotation. According to NASS Crashworthiness Data System (CDS) data of occupants exposed to a rollover crash from 2000 to 2009, half of all fatal complete ejections occurred in crashes with six or more quarter-turns. We wanted to address the fatally and seriously injured populations.

This information was illustrated in the NPRM by the Figure 11 below. The updated target population for this final rule shows that the vast majority of the ejection fatalities (69 percent = 3,067/4,447) are complete ejections. This final rule is designed to mitigate ejections from rollover crashes that cause the most harm (those that result in complete ejection). By doing so, the countermeasures installed pursuant to this rule will reduce fatalities and injuries resulting from severe rollovers. Countermeasures installed to mitigate ejections in crashes with higher degrees of rotation will help occupants involved in those crashes as well as occupants exposed to rollovers of less severity. The inverse would not be true.

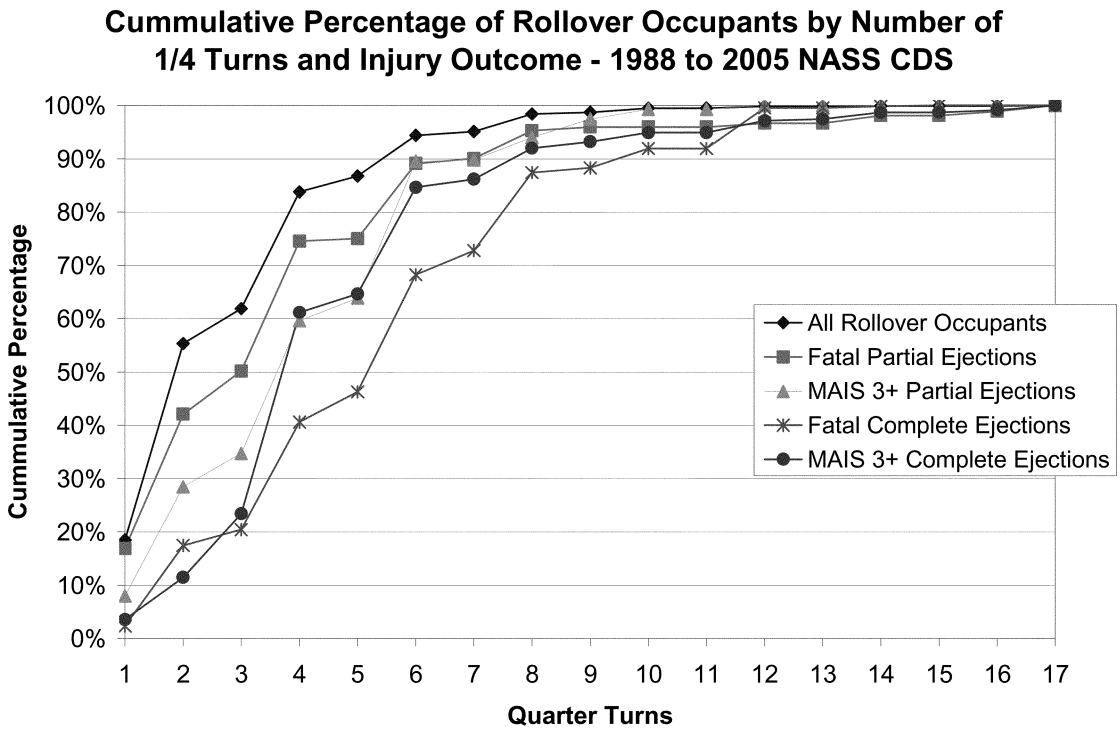

Figure 11

The Alliance indicated that a rollover time representing the cumulative percentage of at least 90 to 96 percent of rollovers is appropriate. Using this range of values and applying it to rollovers resulting in fatal complete ejections, the resulting number of quarter-turns is in the range of 10 to 12 quarter-turns for the 1997–2005 NASS CDS data and approximately 8 to 10 quarter-turns for the more recent 2000–2009 NASS CDS data. The Alliance showed a regression line through the quarter-turns versus rollover times for the agency's full vehicle rollover test data (Table 11 in the NPRM). The commenter did not show the equation for the line. We derived the equation as y = 0.48x, where y = rollover time in seconds and x = number of quarter-turns. Using this equation, the range of 8 to 12 quarter-turns gives the result of 3.8 to 5.8 seconds. Thus the upper end of this range is consistent with the time of the low speed impact proposed in the NPRM [91] and adopted by this final rule. (As noted in the NPRM, the 6-second value may be a conservative assumption for the corresponding number of quarter-turns seen in FMVSS No. 208 Dolly testing. Some rollover crashes with less than eleven quarter-turns may have 5 to 6 second roll times.)

Based on the analysis above, the agency declines to reduce the time delay for the second impact to less than 6 seconds, as reducing the time delay would not be consistent with our stated goal of protecting a "far-reaching population of people in real world crashes." [92]

Guardian's request that NHTSA conduct an analysis of what protection exists under conditions when an air bag does not deploy appears to relate to a concern with the 1.5 second impact test not being performed early enough to address ejections in side impacts. In a side crash, the occupant will interact with the side of the vehicle within a few tenths of a second. In response to Guardian, our experience with vehicles with side curtains that deploy in rollovers is that manufacturers design them to deploy in side impacts as well. These side curtain must provide head and thorax protection in an oblique pole test, pursuant to FMVSS No. 214, and

[91] 74 FR 63196.

[92] 74 FR 63182.

must be designed to deploy and be in position in a matter of milliseconds. In recent testing of side impact air curtains to FMVSS No. 214 and New Car Assessment Program protocols, we have not found non-deployment of or entrapment by side impact curtain air bag entrapment to be a problem.

Advocates requested that we add a third impact test with a delay time greater than 6 seconds. We decline to do so. In the NASS CDS database, combining MAIS 3+ injuries and fatalities results in only about 0.4 percent of ejected occupants are in rollovers with more than 16 quarter-turns (see Figure 11). Using the linear regression from the 208 Dolly testing (y = 0.48x) would result in a duration of 7.7 seconds at 16¼-turns. Hence, there is a diminishing return in terms of the population of ejection rollovers covered by increasing the delay time for the impact test beyond 6 seconds. In addition, there will be costs to redesigning ejection mitigation systems to accommodate a third impact after 6 seconds, assuming the design is practicable; NHTSA cannot conclude the redesign will be cost-effective. With regard to Advocates' concern that "no sustained inflation is tested between the 1.5 and 6 second tests, when excursion could exceed the 4 inch maximum required by the proposed standard," we will not add a test to assess the countermeasure between 1.5 seconds and 6 seconds. We know of no ejection mitigation side curtain system that deflates and inflates itself midway through the test.

Finally, we note that the regulatory text (S5.5(a)) has been clarified to indicate that the time delay applies to deployable countermeasures. For a daylight opening with a non-deployable countermeasure, *e.g.,* fixed advanced glazing, there is no time dependence for the impact. The impactor can be propelled at any time.

2. NPRM on Speed at Which the Headform Impacts the Countermeasure

i. NPRM on Impact Speed

As discussed above, our examination of field crash data has led to the conclusion that the impact test should have both a relatively high speed impact shortly after countermeasure deployment and a lower speed impact late in the deployment.

The first test in the NPRM was at a 24 km/h impact velocity, 1.5 seconds after countermeasure deployment. Field data show that crashes with 6 or more quarter-turns result in the majority of complete ejection fatalities. The 1.5 second time delay for the high speed impact corresponds well to the film analysis of vehicles that roll 5 or more quarter-turns in FMVSS No. 208 Dolly tests, for the amount of time it takes for one complete vehicle revolution. The NPRM reported that laboratory testing using the DRF showed that at around 1.5 seconds, a far side occupant could strike the window opening at nearly 30 km/h.[93] MADYMO computer simulation of three actual rollover crashes predicted that the maximum head speed into the window openings was 22 km/h.[94] Additional justification for the 24 km/h impact speed was found in side impact field data. NASS CDS shows that 35% of occupants completely ejected through the side windows in side impact are exposed to impacts with a ΔV greater than 24 km/h. It was also noted that FMVSS No. 201 also uses a 24 km/h impact speed for the upper interior tests.

The second test in the NPRM has a 6 second delay and a 16 km/h impact speed. Agency film analysis found that the maximum roll time was 5.5 seconds for a vehicle that rolled 12 quarter-turns. A separate film analysis of a much smaller data set found a maximum head speed into the window opening of 17 km/h.[95] Modeling of three rollover crashes showed a maximum torso impact speed of 16 km/h.

ii. Comments on Impact Speed

The Alliance, AIAM, and a number of vehicle manufacturers commented on the impact speed. All of these commenters requested that NHTSA reduce the impact speed of the higher speed 24 km/h test.[96] The requested levels of reduction varied. The commenters did not agree there was a need for a 24 km/h speed, and expressed concern about the potential adverse effects and unintended consequences of not reducing the impact speed, particularly as they relate to side impact protection, protection of out-of-position occupants, and performance in NCAP testing.

The Alliance requested that the 24 km/h test be reduced to 16 km/h. As discussed in the previous section, the Alliance suggested that a 16 km/h test be the only test and be performed at 3.4 seconds after curtain deployment. The Alliance stated that GM[97] and Ford[98] conducted extensive research in this area and have both concluded that the maximum impact energies in the range of 180 to 200 joules (J) were appropriate to address the vast majority of real world rollover events. The commenter stated that this energy level was also validated by the agency's own sled test research (*see* 74 FR at 63192) simulating both rollover and side impact events, which both produced kinetic energies in the range of 180 to 200 J.

Referring to the GM research, the Alliance stated the 16.2 km/h impact speed was derived from analysis of a series of rollover sensor development tests, in which data was collected in an attempt to quantify the kinetic energy associated with an occupant loading the roof rail airbag system. The 52 tests included both belted and unbelted test dummies. The Alliance stated that in all cases, the kinetic energy value associated with the dummy's interaction with the roof rail airbag surrogate (referred to in the study as a window membrane) was less than 180 J.

The Alliance stated that another very influential study that solidified GM's decision to test at 16.2 km/h was the NHTSA sled testing referenced in the NPRM. The sled tests were conducted to determine the effect lower body loading would have on the combined head and upper torso effective mass. The Alliance stated, "The sled testing representing the rollover condition was conducted at 16 km/h, while the side impact simulation was run at 24 km/h. Once the effective mass was determined, both impact conditions produced a kinetic energy between 180–200 J." The commenter suggested that this validates the approach GM had adopted in simulating the occupant kinetic energy in a rollover with an 18 kg impactor at a speed of 16.2 km/h, and shows that the kinetic energy associated with this subsystem test would be applicable to side impact as well."

The Alliance indicated that since they agree with the impactor mass of 18 kg, the appropriated impact "is derived from the equation for linear kinetic energy ($KE = 1/2mv^2$; m = mass and v = speed). The Alliance's recommended impact speed is calculated by substituting m = 18 kg and KE = 178 Joules, resulting in a speed of 16 km/h (4.44 m/s)."

To emphasize their belief that the 24 km/h test is too severe, both the

[93] The agency has reassessed the video data of the DRF testing and calculated lower speeds than originally reported. This is covered in more detail later in this preamble.

[94] 74 FR at 63195

[95] 74 FR at 63197

[96] The 24 km/h test imparts about 400 joules of energy, while the 16 km/h test imparts approximately 178 J.

[97] O'Brian-Mitchell, Bridget M., Lange, Robert C., "Ejection Mitigation in Rollover Events—Component Test Development," SAE 2007–01–0374.

[98] Docket No. NHTSA–2006–26467–0002.

Alliance and Volvo referred to the agency's analysis in the PRIA,[99] which indicated that a 24 km/h speed (for occupant to ejection countermeasure) corresponds to a pre-crash velocity of 133 km/h (83 mph). They indicated that such a pre-crash speed is too rare an occurrence to be reflected in the final rule.

AIAM and VW recommended that the agency first determine the appropriate impact energy and then establish the impactor mass and velocity based on this. AIAM was concerned that impact speeds projected by the agency are typically associated with masses smaller than the proposed 18 kg impactor. VW recommended an impact energy of 180 J, which would correspond to a 18 kg impactor traveling at 16 km/h. VW provided a table of its modeling results from a linear impactor into an air bag (Table 3 in VW comments) showing that impact excursion is primarily a function of the initial kinetic energy of the impactor, as opposed to mass and impact speed.

Honda requested that the agency focus on a maximum energy level of 200 J. The commenter referred to the analysis of GM showing that the effective mass of an occupant's initial contact with a side window in a full vehicle rollover test indicates a constant energy of less than 200 J. Honda stated that its own testing showed that the estimated peak head velocity and effective mass, when tested in accordance with FMVSS No. 208, were also less than 200 J. Honda stated that an upper threshold of 200 J would account for the energy imparted on the side window by a belted occupant.

Nissan commented that its preliminary study of impact energy associated with occupant ejection showed values below 207 J. Based on this and concerns of safety tradeoffs that could exist between FMVSS No. 214, it recommended that the final rule limit the higher speed impact to 20 km/h, corresponding to an energy of approximately 280 J.

Batzer and Ziejewski stated that based on the "testing and analysis that we have seen and performed, NHTSA's 15 mph [24.1 km/h] impact velocity choice is inappropriately high." They stated that a "two impacts against the upper half of the glazing" at 16.1 km/h would be an adequate requirement. They continue that "in side impacts, although a large relative occupant-to-glazing nominal velocity may result, the door actually takes the brunt of the energy and momentum."

Air bag supplier Takata expressed support for the proposed 24 km/h test, stating: "We believe it is important to test all the locations at the high energy level to ensure structural integrity of the countermeasure device."[100] The commenter also informed NHTSA that a 24 km/h test speed requirement would be practicable. (NHTSA–2006–26467–0019, *infra*.)

iii. Agency Response

As explained in this section, NHTSA has evaluated the comments asking us to base a decision on the impact speed on the findings of a GM study and a Ford study. After reviewing the findings of the studies, we do not find those GM and Ford data sufficiently informative.

However, we have carefully considered the comments recommending that the agency reassess the impactor speed proposed on the basis of what should be the impact energy imparted to the ejection mitigation countermeasure, given an impactor mass of 18 kg. We agree that, particularly in the case of a curtain air bag countermeasure, the energy imparted by the linear impactor is a critical factor in the determination of the stringency of the performance requirement as compared to only considering the impact speeds or impactor mass. We acknowledge that some data available to the agency, *e.g.,* DRF testing, vehicle interior video of FMVSS No. 208 Dolly tests, and MADYMO simulations, only allow for an assessment of impact speed. Estimates of energy from these data require assumptions to be made about effective mass values or further computational modeling.

Accordingly, we have reanalyzed sled test data from the advanced glazing program to measure the energy the mid-size adult male dummy imparted to the countermeasure. We analyzed the data from a 24.1 km/h (15 mph) test meant to be more indicative of a side impact condition and a 16.1 km/h (10 mph) test meant to be more indicative of a rollover condition. For the 24.1 km/h (side impact) test, we determined the energy imparted to the window opening was 290 J. For the 16 km/h (rollover) condition, the energy on the window opening was calculated to be 220 J. These were the only laboratory test data available to the agency for direct analysis of impact energy. For the limited conditions tested, the results were not at the estimated energy levels in the 400 J range, equivalent to the impactor energy when traveling at the 24 km/h speed considered by the NPRM.

After reviewing the comments, we also reanalyzed DRF data used in the NPRM and found that the original transcription of the film speed used to determine impact speed was not done properly. We stated in the NPRM that video analysis of dummy head impact velocities with the glazing showed that for the 5th percentile female far side occupant, the peak impact speed was 31 km/h. After reanalyzing the data for this final rule, we determined that the peak head and shoulder impact speeds were approximately half that reported in the NPRM.

We have determined that, based on a thorough analysis of all available information, including the reanalyzed sled testing used by the agency in the advanced glazing program and the DRF data discussed in the NPRM, the test speed for the 1.5 second test adopted by this final rule should be 20 km/h, rather than the proposed 24 km/h. A 20 km/h test would better represent the energies to which the ejection countermeasure will be exposed to in the field, particularly in rollovers.

A. Analysis of GM Study on Impact Energy

Several commenters referred to a GM study in which GM determined the effective mass and impact energy on a membrane covering the first row window. The agency had analyzed this study and provided a review of it in the NPRM and the Technical Analysis supporting the NPRM, regarding the basis for the impactor mass determination of 18 kg. A brief description of the study is provided below.

GM conducted a study to develop rollover sensors, using 52 full vehicle rollover tests. It also attempted to assess the effective mass and impact energy on the front window area by belted and unbelted test dummies. Forty-six percent of the tests were less than a quarter-turn, 27 percent were one quarter-turn and 27 percent were two quarter-turns. In the tests, the two front seats were occupied by 50th percentile adult male Hybrid III dummies. Half of the tests were with belted dummies and half were unbelted. The belt status versus number of quarter-turns was not reported by the authors.

The method used to estimate the effective mass required the calculation of the resultant loading on the dummy head by the window membrane using head acceleration, neck loading and a dummy head mass assumed to be 4.204

[99] NHTSA–2009–0183–0002, p. VIII 18.

[100] NHTSA–2009–0183–0015, p. 2.

kg.[101] The effective mass was then determined by using this head contact force along with the resultant head and chest accelerations. Energy levels were calculated by using effective mass and peak head velocity. As noted by various commenters to the NPRM for today's final rule, the estimated effective mass for most belted tests was about 5 kg and all were less than 10 kg. The effective mass for the unbelted occupants ranged from 5 to 85 kg. The authors reported that the highest energy level was 182.3 Nm.

We believe that the GM data set has little relevance to this rulemaking with respect to the loading of the side window openings in crashes that cause the most ejection harm. With regard to the energy values derived from this study, it is important to identify several key limitations. First, the study was done as a development tool for sensors, not as a means of determining the range of potential occupant loading/energy on ejection countermeasures in relatively severe rollover crashes. As such, vehicle dynamics that show a vehicle on the threshold of rolling or not rolling is of great interest in sensor development. From the distribution of quarter-turns in these tests, the focus of the study was on the minimum thresholds for sensor deployment, i.e., rollovers of two or fewer quarter-turns. In contrast, to cover 90 percent of all rollovers inducing serious injury and fatal ejections, a study of rollovers involving 8 or more quarter-turns is more appropriate. Regarding rollovers causing complete fatal ejections, a cumulative population of 90 percent of these crashes would necessitate an analysis of crashes involving 9 or more quarter-turns. The force imparted on the side window openings in these types of crashes is substantially greater than that discerned by GM in this study.

Second, although the authors state that the highest energy level estimated was below 182.3 J, they subsequently report a case where they estimate that the trailing side occupant alone imparts 243 J to the membrane. We thus believe it is more accurate to state that the highest energy calculated in this set of tests was at least 243 J. It would also be very important to know if the leading occupant was applying load at the same time as the trailing occupant, perhaps adding to the 243 J value. Nonetheless, we note that a single unbelted leading occupant was estimated to have more than 100 J of energy. If both a trailing and leading occupant were to load the window area simultaneously, the total energy would be 343 J. Restricting ourselves to consideration of the 243 J value, we can correlate this energy to the ejection mitigation test procedure by assuming an impactor mass of 18 kg. The corresponding impact velocity would be 18.7 km/h.

Third, the methodology and data presented in the GM study seem to indicate that only membrane loading from the dummy heads was estimated. The agency's sled testing indicated that more load is transmitted through the shoulder than the head, and even more load is imparted when both the head and shoulder impart loads at the same time. We do not believe only head loading should be considered when evaluating the load impacted by an occupant on the ejection mitigation countermeasure, even for unbelted dummies, as this may have contributed to lower energy estimates.

B. Analysis of Ford Study on Impact Energy

Several comments from vehicle manufacturers made reference to modeling Ford performed in which Ford estimated the effective mass and impact energy that occupants would impart to the first row window in a rollover. This information was originally presented to NHTSA at a February 7, 2007 meeting with the agency.[102] Ford conducted computer modeling on three vehicle models, with belted and unbelted 50th percentile adult male and 5th percentile adult female Hybrid III dummies. This was originally done "to determine the appropriate energy for a headform impact test procedure for Safety Canopy development." The reported effective mass range was about 5 to 35 kg (average of 14 kg) for belted occupants and 5 to 50 kg (average of 24 kg) for unbelted occupants. The reported peak energy values were similar for belted and unbelted occupants, at about 180 J. These maximum values appeared to occur early in the simulations (< 200 ms).

Ford indicated that they modeled curb trip and SAE J2114—Dolly Rollover Recommended Test Procedure (Dolly) tests. The speeds, vehicle roll rates, and quarter-turns were not reported.[103] As such, it is very difficult for us to assess the severity of the rollovers that were simulated. As was the case in our analysis of the GM study, rollovers that only produce a few quarter-turns are not representative of the ejection-causing crashes that we are attempting to cover by this standard.

The majority of the data was reported before 600 ms into the event. This is probably less than 2 quarter-turns into the event, depending on how Ford determined time zero. It is unclear if Ford only modeled part of the event. For vehicles that undergo many more quarter-turns, there may be impacts with the window area that were not captured by Ford's modeling only the first few quarter-turns.

The agency analyzed the Ford study and did not find the results to be persuasive. The fact that a set of simulations result in energy estimates below 180 J is of limited use to the agency's determination of an impact speed/energy that will protect a far-reaching population of occupants.

C. Reanalysis of Agency Data From NHTSA Sled Testing

Several commenters to the NPRM stated that the agency's own sled testing indicated that the appropriate energy of the impact should be below 200 J. They are referring to sled testing that was performed in 1993 as a follow-up to dummy pendulum impacts.[104] The sled tests were conducted to determine the appropriate mass of a linear impactor to be used in the testing of advanced glazing (the headform impactor).[105]

These tests were described as incorporating a "side impact" condition and a "rollover" condition, although they were both side impact sled tests. For the test designed to be more representative of a side impact condition, the target impact speed was 24.1 km/h and the dummy (a 50th percentile adult male BioSID) was positioned was seated upright. In the rollover condition, the target impact speed was described as 16.1 km/h[106] and the dummy was positioned leaning towards the door such that its head and torso would contact the simulated glazing (foam) at about the same time. This leaning position was intended to be more representative of an occupant's attitude in a rollover. In both conditions the foam was positioned such that head and shoulder contact with the foam was achieved at similar times.

[101] Although the membrane had force measurement instrumentation at each corner, these measurements were not used in the analysis due to a "data integrity issue."

[102] Docket No. NHTSA–2006–26467–0002.

[103] The SAE J2114 test uses the same test configuration as the 208 Dolly test. However, the 208 Dolly test is performed at a speed of 48 km/h. SAE J2114 does not have a recommended speed.

[104] "Ejection Mitigation Using Advanced Glazing: A Status Report," November 1995, Docket No. NHTSA–1996–1782–3. Pg. 7–10.

[105] These have been entered as test Nos. 10282—10287 in the NHTSA Biomechanics Test Database. They are accessible at *http://www-nrd.nhtsa.dot.gov/database/aspx/biodb/querytesttable.aspx.*

[106] Although we refer to this as the 16.1 km/h test, we found that the actual test speed for the test we analyzed in detail was 15.2 km/h.

It should be understood that the testing was not designed to directly measure the energy the countermeasure must absorb in order to prevent an occupant ejection. Rather, this set of tests was a follow-up to dummy pendulum impacts used to determine the appropriate mass of a linear impactor used to test advanced glazing. (If energy assessment had been the goal, a means of measuring displacement of the loaded reaction surface (foam or surface behind it) could have been undertaken. As it is, no direct measurement of the displacement of the loaded surface was made.)

In response to the comments to the NPRM, we reanalyzed the sled test data in an effort to estimate the energy the incoming dummy imparted to the foam. This new analysis is discussed in detail in the technical report accompanying this final rule. Briefly stated, for the 24.1 km/h (side impact) test, we determined that the energy imparted to the window opening was approximately 290 J (rounded up from 287 J). We believe this energy likely represents a minimum value for this test configuration.[107] From this energy value we estimated the effective mass of the test to be 13 kg. As described below, the energy and effective mass estimates for the 16.1 km/h (rollover) test were more complex. However, based on this analysis we estimate the energy of that impact to be 200 J and the effective mass to be 22 kg. However, this test was actually performed at approximately 15.5 km/h. If it had been correctly performed at 16.1 km/h (10 mph), the energy would have been 220 J. (Note that these values do not support the commenters to the NPRM that stated that the agency's sled testing indicated that the appropriate energy of the impact should be below 200 J. These sled tests alone provide a range of energies between 220 to 290 J that, assuming an impactor mass of 18 kg, correspond to a range of impact velocities of 18.5 to 20.6 km/h.)

24 Km/h Test

The process of reanalysis started with the 24.1 km/h upright (side impact) tests. The energy into the foam padding was determined by assessing the "work" done on the dummy, i.e., the integral of the lateral force versus lateral displacement on the dummy. The lateral force on the dummy was assumed to be the force measured by the load cells behind the foam (the foam was a surrogate for the window countermeasure) for the head and shoulder load cells. Equation (1) represents the energy of the head into the foam. A similar equation can be written for the shoulder.

$$Energy\,Head = \int F_h\,dy = \sum_{i=0}^{n} \frac{F_h(t_i) + F_h(t_{i+1})}{2}\left(y_{h/s}(t_{i+1}) - y_{h/s}(t_i)\right) \quad (1)$$

Where:

F_h = Force measured at head foam pad, assumed to be lateral force on dummy head.

$y_{h/s}$ = y (lateral) displacement of the dummy head relative to the sled.

T = Time

The analysis is set forth in detail in the technical report. We determined that, because in the 24.1 km/h test the dummy was initially positioned upright (i.e., the midsagittal plane aligned with a vertical axis), the head and shoulders of the dummy contacted the foam pads at about the same time. This resulted in the dummy maintaining its upright position during force application through the foam. We assumed there was no significant rigid body rotation; examination of the test video confirmed this assumption. This assumption allowed the use of the measured head c.g. (center of gravity) acceleration to be integrated once for velocity and twice for displacement. In the case of the torso/shoulder loading, the accelerometer at the first thoracic vertebra (T1) was used.

Three different types of foam padding were used in the original tests.[108] In order of increasing stiffness, the foams were: Polystyrene, Arsan and Ethafoam LC 200. Table 33 shows the estimated impact energy and the measured maximum force at the head and shoulder on the Ethafoam pads, as well as the maximum combined values. The combined maximum energy value was 287 J. We believe it is appropriate to consider the total energy value that combines the maximum head and shoulder components in that this would represent the total amount of energy that the countermeasure must absorb. The same type of energy estimate was made for the tests with Arsan and polystyrene using eq. 1. The energy estimates were 282 J and 252 J for Arsan and polystyrene, respectively. We expect the less stiff Arsan and polystyrene to result in lower energy estimates.

TABLE 33—ENERGY (EQ. 1) AND FORCE ON THE ETHAFOAM PADDING IN THE 24.1 KM/H SLED TEST

	Maximum energy (J)	Maximum force (N)
Head	97.1	2,569
Shoulder	190.1	3,220
Combined—Total	287	

We also reassessed the effective mass calculations in the 24.1 km/h Ethafoam test. Effective mass was calculated in three different ways. As was reported in the 1995 Advanced Glazing Report, we estimated the effective mass as a function of time during the foam contact by using eq. (2). Again, this is done for both the head and torso separately, and is added for a total effective mass estimate. The estimate over time was averaged to provide a single value of effective mass. However, averaging over different time periods can result in very different estimates of effective mass. The estimate below uses the time period between when the peak force value is achieved to when the minimum relative velocity between the dummy and the sled is achieved.

[107] We say "minimum" because by the nature of impact into foam, there were energy losses that would not be reflected in the estimated impact energy.

[108] We recognize that for all of the tests there was energy loss into the foam, i.e., the foam absorbed the energy of the impact without returning it to the dummy. The foam cells were heated, deformed beyond their elastic limit and/or were destroyed. Thus, the loads imparted to the dummy were lower than would be the case if foam were not present. Since energy was derived from the load cell force measured behind the foam pad and the displacement of the head (or shoulder) in the direction of force, the lower force imparted to the dummy resulted in a lower calculated energy. This is to say, the estimate of the work/energy needed for an ejection countermeasure was likely an underestimate. The extent of the underestimation is not known.

$$EM(t) = \frac{F(t)}{a_y(t)} \quad (2)$$

Where:
EM = effective mass
a_y = acceleration in the y (lateral) direction

The second method used to calculate effective mass was to solve for mass in the equation of kinetic energy by assuming that the estimated impact energy is equal to the kinetic energy of the effective mass prior to impact, as is shown in eq. (3).

$$EM = \frac{2Ei}{V_{y0}^2} \quad (3)$$

Where:
Ei = Energy of impact
V_{y0} = Lateral velocity relative to sled just prior to foam contact

The third and final method was to use impulse moment equations by integrating the force applied to the dummy and dividing by the change in velocity relative to the sled. This is shown in eq. (4).

$$EM = \frac{\int_{t0}^{tf} F(t)}{V_{y0} - V_{yf}} \quad (4)$$

Where:
V_{yf} = Lateral velocity relative to sled at maximum foam compression
tf = time of maximum foam compression (minimum relative velocity)

The estimates of effective mass of the combined head and shoulder from all three methods, which range from 12.2 to 13.1 for the 24.1 km/h impact, are shown in the fourth through the fifth columns in Table 34. The impulse method estimate is lower than the other two estimates, which match very closely. The second column in Table 34 shows the individual values of impact speed for the head and shoulder.

TABLE 34—IMPACT ENERGY ON THE ETHAFOAM PADDING IN THE 24 KM/H SLED TEST FROM MEASURED FORCE AND ACCELERATION DATA

	V_0 (m/s)	Method of Effective Mass Determination (kg)		
		Avg. Accel. (eq. 2)	Energy (eq. 3)	Impulse (eq. 4)
Head	6.85	4.32	4.14	4.19
Shoulder	6.53	8.58	8.92	7.97
Combined		12.9	13.1	12.2

The estimate of impact energy can also be made other than by using eq. (1). An alternate method rearranges the terms in eq. (3) and uses the effective mass in combination with the pre-impact dummy speed. If an effective mass of 13 kg were used in combination with a theoretical impact speed of 24.1 km/hr (6.71 m/s), the energy generated would be 293 J. Based on the above analysis, we believe that a reasonable estimate for the combined head and shoulder effective mass and energy for a 24.1 km/h impact to be 13 kg and 290 J, respectively. We can correlate this energy value to the ejection mitigation test procedure by assuming an impactor mass of 18 kg. The corresponding impact velocity is 20.5 km/h.

16.1 km/h Test

We also reanalyzed the 16.1 km/h testing with the dummy midsagittal plane oriented 25 degrees from the vertical (rollover configuration). The analysis of this test configuration was more complex, mainly because the coordinate system of the dummy was not aligned with that of the sled, and changed as the sled moved and particularly as the dummy interacted with the foam padding. We initially compensated for the dummy orientation by dividing the component of the local y (lateral) accelerometer values by the cosine of 25 degrees. Single and double integration is required to calculate the dummy velocity and displacement, respectively. Table 35 below shows the estimated impact energy on the Ethafoam padding in the 16.1 km/h sled test test using the same methods as used for the 24.1 km/h test. Application of eq. (1) for the head and a similar equation for the shoulder provided the estimate of impact energy shown in the fifth column of Table 35, below. We also generated the effective mass values by use of eq. (4), shown in the third column of Table 35. We used this effective mass estimate and the velocity relative to the sled of the head and shoulder at contact with the foam to estimate the incoming kinetic energy by rearranging the terms in eq. (3), shown in the fourth column of Table 35.[109]

[109] As discussed below, the actual sled speed at the time of dummy contact with the foam was 15.2 km/h (4.24 m/s) to 15.5 km/h (4.30 m/s) and lower than the intended sled speed of 16.1 km/h (4.47 m/s).

TABLE 35—IMPACT ENERGY ON THE ETHAFOAM PADDING IN THE 16.1 KM/H SLED TEST FROM MEASURED FORCE AND ACCELERATION DATA

	V_o (m/s)	EM (eq. 4)	Energy (eq. 3)	Energy (eq. 1)
Head	4.84	6.7 kg	78.5 J	68.3 J
Shoulder	4.06	13.1 kg	108 J	92.5 J
Combined		19.8 kg	187 J	161 J

We do not have a great deal of confidence in the energy values presented in Table 35, particularly in the estimate using eq. (1). As stated above, these estimates require integration of the dummy head and T1 acceleration values. To the extent the dummy head or torso becomes misaligned with the 25 degree tilt prior to and after foam contact, the integration of the sensor readings compounds the error in estimated velocity and displacement. Differences in the calculated initial head and shoulder velocity of 4.84 m/s and 4.06 m/s, respectively, are indicative of dummy rotation prior to foam contact. Examination of the video confirmed the rigid body rotation during dummy free-flight and after foam contact. Short of performing a much more rigorous video analysis of the test films, we opted for another strategy to estimate the energy of the 16.1 km/h impact configurations.

One strategy we employed was based on the fact that the constitutive properties of the foam for both the 16.1 km/h impact into the Ethafoam padding and 24.1 km/h impact into Ethafoam did not change, *i.e.,* the foam properties did not change. Based on this, we attempted to derive the dummy motion in the direction of force applied by the foam. We assumed that once in contact with the foam, the lateral force on the head or shoulder of the dummy can be represented by a mass on a spring, in parallel with a viscous dashpot. To simplify this analysis we assume the damping coefficient is zero and the force on the mass is simply a function of the spring stiffness ($F = -ky$). We can thus represent the energy stored in a spring, as shown in eq. (5).

$$Es = \frac{1}{2}ky^2 = \frac{F^2}{2k} \qquad (5)$$

Where:

Es = Energy stored in a spring

Using this concept we can derive eq. (6) to determine the impact energy of the 16.1 km/h test since we know the energy of the 24.1 km/h impact and the forces measured at the foam pads for each impact speed. The head and shoulder impact energies have ratios of 61 percent and 75 percent, respectively. The resulting estimate of total impact energy for the 16.1 km/h impact is 202 J. Using this energy value and the estimate for initial head and shoulder velocity as inputs to eq. (3), the effective mass for the head and shoulder are 5.1 kg and 17.3 kg, respectively. The combined effective mass is 22.3 kg. The results are given in Table 36.

$$\frac{E_{s1}}{E_{s2}} = \left(\frac{F_1}{F_2}\right)^2 \qquad (6)$$

TABLE 36—IMPACT ENERGY AND FORCE ON THE ETHAFOAM PADDING IN THE 16.1 KM/H SLED TEST ESTIMATED FROM A SPRING MODEL

	Max. energy (J)	Max. force (N)	Ratio of energy	Effective mass
Head	59.2	2,005	60.9%	5.05
Shoulder	143	2,789	75.0	17.3
Combined	202			22.3

Another strategy employed to estimate the energy of the 16.1 km/h test was based on the assumption that the estimate of sled velocity was a better representation of the dummy impact speed than the speed derived from the dummy accelerometers. The second column in Table 37 shows the sled speed just prior to dummy head and shoulder contact. Equation 4 can be used to estimate the effective mass if the time (t_f) of minimum relative dummy to sled velocity (v_{yf}) is known. However, the only estimate of this time is from the single integration of dummy accelerometers. Nonetheless, the EM and energy of impact, using eq. (3), are given in Table 37.

TABLE 37—HEAD IMPACT ENERGY INTO THE ETHAFOAM FOR THE 16.1 AND 24.1 KM/H TESTS, ESTIMATED BY ASSUMING SLED VELOCITY EQUALS THE IMPACT VELOCITY

	V_o (m/s)	EM (eq. 6.6.4) (kg)	Energy (eq. 6.6.3)
Head	4.30	7.53	69.5 J
Shoulder	4.24	13.8	124 J
Combined		21.4	194 J

By using the spring equation assumption (Table 36) and sled velocity rather than dummy sensor estimates for initial impact speed (Table 37), we estimate an effective mass range of 21.4 to 22.3 kg and an energy range of 194 to 202 J. We believe this range of estimates is superior to the energy and effective mass values using only dummy sensor derived estimates of dummy velocity and displacement (Table 35), particularly the estimate using eq. (1).

Thus, we believe that it is reasonable to estimate the effective mass and energy of the 16.1 km/h test as 22 kg (6.3 kg for the head and 15.6 kg for the shoulder) and 200 J, respectively.

Finally, we note that if the test had been actually performed at 16.1 km/h (4.47 m/s) rather than the actual value of approximately 15.5 km/h (4.3 m/s), the energy estimate for the test would be higher. There is no reason to believe that if the test were performed at a higher speed that it would change the effective mass estimate. Thus, if we use the 22 kg effective mass estimate, the impact energy at 16.1 km/h would be 220 J.

D. DRF Data

We also reanalyzed DRF data used in the NPRM and found an error in the analysis of impact speed. In the NPRM (74 FR at 63196), we discussed video analysis of data from the advanced glazing program of vehicles tested on the DRF with a 5th percentile adult female dummy and a 50th percentile adult male test dummy (near and far side).[110] We stated that video analysis of dummy head impact velocities with the glazing showed that for the 5th percentile female far side occupant, the time to glazing impact after the DRF began rotating was between 1.3 and 1.8 seconds, which was in the range of two to three quarter-turns of rotation, and that the peak impact speed was 31 km/h. In Table 12 of the NPRM (*id.*), we showed the estimated velocities for the near and far side dummies.

After reanalyzing the data for this final rule, we determined that the head impact speeds are approximately half of those reported in the NPRM. Apparently the reason for this was an error in film rate transcription during the original analysis. A reanalysis of the DRF videos found peak head and shoulder speeds between 15 and 16 km/h, see Table 38 below.[111] There is no way to directly determine the energy of the interaction between the dummies and the glazing in these DRF tests. However, assuming an effective mass for the 50th percentile male of 6.3 kg and 15.6 kg for the head and torso impact, respectively, the resultant impact energy would be 209 J. We can correlate this energy value to the ejection mitigation test procedure by assuming an impactor mass of 18 kg. The corresponding impact velocity would be 17.3 km/h.

TABLE 38—DRF TESTING PEAK VELOCITIES

Dummy	Impact speed (km/h)		Estimated impact energy (J)	
	Near Side	Far Side	Near Side	Far Side
5th Female:				
Head	7.2	14.5		
Shoulder	7.0	15.5		
50th Male:				
Head	9.2	15.2		209
Shoulder	9.0	15.8		

It is important to emphasize that this set of DRF tests was performed at a peak roll rate of 330–360 deg./sec. An analysis of field data submitted by Batzer and Ziejewski suggests that higher peak roll rates can occur in the field.[112] We would expect that if the DRF testing were performed at a higher roll rate, that higher impact speed would be possible. Modeling results provided by the agency in the NPRM showed a Toyota pickup rollover simulation with a head and torso to glazing speed of 20 and 16 km/h, respectively.[113] This would result in a total energy of 251 J, assuming a 22 kg effective mass.

E. Discussion and Conclusion

We agree with the importance of impact energy as a critical parameter in the determination of the appropriate impact speed for the 18 kg impactor in the ejection mitigation test procedure, particularly for a countermeasure consisting of side curtain air bags. Therefore, we have endeavored to take a fresh look at the available data provided by commenters and the data the agency used to justify the impact speed in the NPRM. Based on our analysis, best available data have led us to adopt an impact test speed of 20 km/h, consistent with Nissan's comment, and the associated 278 J energy level.

We do not agree with requests by commenters to decrease the impact speed to any level below the 20 km/h value. Honda requested a 17 km/h impact speed (200 J), based on an analysis of peak head velocity and effective mass involving belted occupants. We decline to restrict our rulemaking to countermeasures that are subject to performance requirements that account for the energy imparted on the side window by belted occupants. The Alliance indicated that the appropriate impact speed should be based on an energy of 178 Joules, resulting in a speed of 16 km/h (4.44 m/s). We did not find the supporting GM and Ford studies persuasive. We believe the use of the GM energy estimates as a basis for the final rule is problematic because the rollover severity used in the study only represents a small minority of the most harmful ejection-inducing crashes. Also, the study seems to only measure, or only contain, occupant loading through the head. We would expect shoulder or combined shoulder and head loading to result in higher energy estimates. The Ford modeling study also has limited usefulness given that lack of specificity and detail provided about the modeling.

We have also determined that commenters' contention that the agency's sled test data is supportive of only a 16 km/h impact to be unfounded. Our analysis showed these tests represent energies from 220 to 290 J, which correlated to impact speeds in the range of 17.8 to 20.4 km/h.

We acknowledge that there are practical limitations to the level of performance mandated by this Federal safety standard; the standard does not reflect the worst case scenario. The speeds at which our sled tests were run

[110] Duffy, S., "Test Procedure for Evaluating Ejection Mitigation Systems," 2002 SAE Government/Industry Meeting.

[111] Videos and electronic data from these tests have been placed in the NHTSA Component Database and can be accessed at www-nrd.nhtsa.dot.gov/database/aspx/comdb/querytesttable.aspx. Data from four tests are under test number 716. The file names for the 5th female near and far side tests are C00716C001 and C00716002, respectively. The file names for the 50th male near and far side tests are C00716C003 and C00716004, respectively.

[112] An IMECE paper submitted with Batzer's comments indicates that this range of peak roll rate is consistent with a 7–9 ¼-turn rollover.

[113] 74 FR at 63195.

did not generate the highest possible speeds that occupants in the field could interact with the window opening. Some vehicles roll over with a higher roll rate than generated by the DRF tests, resulting in higher impact velocities than those measured in the laboratory, and some occupants will weigh more than the dummies used or have a greater proportion of their mass contact the window opening. Nonetheless, ejection mitigation countermeasures installed pursuant to this standard will provide a level of protection even under more dire conditions. Moreover, this standard sets a reasonable, appropriate, and practicable level of performance at a reasonable cost.[114] It assures that vehicles will be equipped with ejection mitigation countermeasures suited to the energy generated in most rollover crashes. Consistent with the agency's principles for sound regulatory decision-making, the 20 km/h impact test is data-driven and supported by all the technical data available to date. A 400 J energy value has not been supported by any of the technical assessments thus far conducted.

The FRIA discusses the impacts of adopting a 20 km/h test versus a 24 km/h test. We performed a sensitivity analysis comparing the harm associated with crashes with an occupant impact speed of 20 km/h to that of crashes associated with an occupant impact speed of 24 km/h, and the resulting effect on the benefits analysis. This analysis settles on a supposition that the difference between a 20 km/h test speed and a 24 km/h test speed is about 7 percent of the overall benefits of the final rule. Nonetheless, we have several reasons for preferring the 20 km/h test requirement.

We have analyzed costs and other impacts associated with the 20 km/h and 24 km/h criteria, and have found the 20 km/h test requirement to be the most cost effective criterion. The FRIA compares the cost per equivalent life saved of a 20 km/h rollover curtain air bag with that of a 24 km/h rollover curtain air bag with a larger inflator (low end of cost range) to achieve higher air bag pressure and a 24 km/h rollover curtain air bag that has the same pressure as the 20 km/h curtain, but has greater volume (high end of the cost range). It is assumed that this system with greater volume requires additional air bag material and an additional inflator for a vehicle with 3 rows or 2 rows and a cargo area. Using the 3 percent discount rate as a basis of comparison, the 20 km/h system is the most cost effective at $1.4 million per equivalent life saved. This compares with a range in cost for the 24 km/h system from $1.6 to $2.8 million.

Not only does the 20 km/h test requirement impose minimal costs for the maximum benefit, a 20 km/h test requirement, as discussed above, it is better supported by technical data than a 24 km/h requirement as it better represents the forces to which the ejection countermeasure will be exposed to in the field than a 24 km/h requirement, particularly in rollovers.

Some vehicle manufacturers have commented that meeting a 24 km/h requirement will entail increasing air bag pressure in current bags, and have expressed concerns that more rigid bags will increase head injury criteria (HIC) values measured in a side impact test and IARVs measured in out-of-position (OOP) tests. Although whether those increased HIC values and IARVs in OOP tests from increased air bag pressure pose an unreasonable safety risk is not known, negative trade-offs concern the agency in any rulemaking. Those possible trade-offs can be avoided with a 20 km/h requirement. To illustrate, in agency testing the MY 2007 Mazda CX9 was able to meet the 20 km/h performance test at all locations tested, without modification. This vehicle has a 5-star side impact rating under the then-NCAP rating system.

Finally, some manufacturers pointed to their successful experience with rollover curtains installed on their vehicles to argue that the performance requirements of the proposed standard are too high. VW stated that it was unaware of any ejections occurring in 100,000 Tiguan, Q7 and Q5 vehicles with sealed curtain side air bags. GM stated that it started implementing ejection mitigation curtains with several 2005 model year vehicles and it is unaware of injuries due to ejection past an ejection mitigation air bag. GM submitted case studies of twelve rollover crashes investigated by GM and the University of Michigan and found no ejections had occurred.

In response to VW, the fact that VW is not aware of any ejections is not necessarily supportive of a conclusion that the ejection mitigation systems in the vehicles are sufficient. A much more detailed field data analysis of available rollover and side impact crashes would be necessary. For example, such information would have to include the number of rollover crashes, the number of quarter-turns, and the seat belt status of the occupants. Even then, it is difficult to draw conclusions from a limit number of crashes. Further, with regard to GM's twelve cases, almost all of these cases involved belted occupants. Our final rule focuses on ejection mitigation for both unbelted and belted occupants.

In sum, based on our analysis of the comments and a reanalysis of the basis for the impact tests, we have adopted an impact test speed of 20 km/h. We conclude that this level of energy is more representative of the energy the ejection countermeasure will typically be exposed to in the field, particularly in rollovers. Thus, the 20 km/h requirement is reasonable, appropriate, and practicable, and preferable to the 24 km/h test requirement.

d. Target Locations

This section discusses the NPRM's proposals concerning where the headform impactor will be aimed to assess the effectiveness of ejection mitigation countermeasures, the comments received on the NPRM, and our responses thereto. Because there are many issues relating to target locations, to make the discussion easier to follow we respond to the comments immediately after summarizing them issue by issue.

This final rule adopts the test procedures proposed in the NPRM for locating target locations except as follows: (1) The window opening for cargo areas behind the 1st and 2nd row will be impacted; (2) the lateral distance defining the window opening is increased from 50 to 100 mm; and (3) if necessary, the headform and targets will be rotated by 90 degrees to a horizontal orientation if this results in more impact locations (up to a maximum of four targets per window) than the vertical orientation. Additional changes include: instructing removal of gasket material or weather stripping used to create a waterproof seal between the glazing and the vehicle interior and the door and the door frame; allowing some portion of material bordering a window opening on the exterior of the vehicle to factor into our assessment of what is a window opening; and permitting the adjustment or removal of components that would interfere with the ejection impactor or headform in the test.

1. Why We Are Focusing On Side Windows and Not Other Openings

In general, comments from glazing manufacturers and consumer groups asked that the agency expand coverage to sun/moon roofs and backlights. EPGAA stated that '[w]hile NHTSA addresses third row windows which

[114] Some commenters said that unintended safety disbenefits would result from a 24 km/h test, such as a greater risk to out of position occupants or less protection in FMVSS No. 214 side impact crashes. We respond to these commenters in a later section of this preamble.

account for less than 1% of the injuries and deaths, it completely ignores sun roofs and rear windows which are also window openings through which outboard seated occupants could be ejected and together account for over 12% of the injuries and 7% of the deaths." Public Citizen (PC) commented that "[t]he agency should consider whether laminated glazing would counter the potential for ejection through the roof, which can be expected to increase as a result of the side curtain airbags that the standard requires." PC also mentioned that the PRIA quoted a 2002 agency report that estimated that 15 percent of occupants are ejected through sun roofs. Batzer and Ziejewski stated that NHTSA's "statistics indicate that the most common windows acting as ejection portals include the first row windows, the windshield, the sunroof, and the backlite [sic]."

Agency Response

We do not grant the request from Advocates for ejection mitigation coverage of doors and windshields. Door openings are already regulated by FMVSS No. 206, "Door locks and door retention components," which was upgraded in 2009 expressly to improve door lock and hinge requirements to reduce door openings in crashes. (72 FR 5385, February 6, 2007, Docket NHTSA–2006–23882.) Windshields are regulated by FMVSS No. 205, "Glazing materials," and the associated performance requirements in FMVSS No. 212, "Windshield mounting." No suggestion was made as to how these existing requirements could be enhanced.

Ejection mitigation through the backlight and through movable or fixed roof panels is not addressed by FMVSS Nos. 206, 205, or 212. Our most recent analysis of ejection route data set forth in this final rule and in the FRIA indicates that backlight and roof ejections rank 3rd, behind 2nd row window ejections.[115] For all crash types the backlight and roof represent 4.8 percent and 3.1 percent of fatalities, respectively. When crashes are limited to target population crash types, i.e., crashes involving lateral rollovers and side impact crashes, the backlight and roof represent 5.9 percent and 3.9 percent, respectively. Backlights are on nearly every vehicle and sun/moon roofs are not, so given those data, if a roof opening is present, it represents a greater risk for ejection than the backlight.

In the updated data analysis for this final rule, we provide a much more refined analysis of the roof ejections than was provided in the NPRM. This was achieved by performing a manual review of each case. Our analysis was able to segment the data by those with roof glazing (moon roofs) and those with sheet metal panels (sun roofs) as well as the pre-crash position of the panel. Closed moon roofs represent about half the fatal and MAIS 3+ ejections through the roof.

To fully understand this issue, the agency has assessed the cost effectiveness of using advanced glazing for the backlight and closed roof glazing. This analysis, set forth in the FRIA, includes all crash types (not limited to side impacts and rollovers) since the advanced glazing countermeasure does not need to deploy. The results are given in Table 39 at the 3 and 7 percent discount rates and at an assumed ejection effectiveness level of 20 percent. The 20 percent effectiveness value used in the FRIA is for illustration purposes. At the 20 percent level of effectiveness, the backlight glazing does not appear cost effective, while the roof glazing could be.

TABLE 39—COST PER EQUIVALENT LIFE SAVED (ELS) OF EJECTIONS THROUGH BACKLIGHT AND ROOF GLAZING WITH ADVANCED GLAZING

Assumed containment effectiveness	Cost per ELS			
	Backlight		Roof glazing	
	3%	7%	7%	3%
20%	$11.3M	$14.2M	$4.1M	$5.1M

Commenters to the NPRM argued that the PRIA stated that after implementation of FMVSS No. 226, roof ejections are likely to increase from their current level as a result of occupants, contained from side window ejections, being available for ejection from other portals. The agency agrees this is a reasonable possibility. In fact, our findings in analyzing the RODSS database cases with side curtains are consistent with this conclusion.[116] Commenters also indicated their belief that roof ejections may increase due to more and larger sun/moon roofs in the future. This forecast seems speculative since there was no data provided to support it.

In any event, we have determined it is not reasonable to expand this final rule to roof glazing. A major impediment is the lack of a proven performance test procedure for roof glazing. The current configuration of an ejection propulsion mechanism and ejection impactor has been years in development and is specially designed for horizontal impacts on nominally vertical surfaces. A comparable performance test will have to be developed that delivers an appropriate amount of impact energy to a pre-broken roof glazing or the opening covered by some other countermeasure.

Another factor that causes us not to expand this final rule to address ejections through the roof is an absence of notice to the public to add such a provision to the final rule. The public has not been provided meaningful notice that NHTSA was considering requirements for roof portals, and has not been provided an opportunity to comment on such requirements. Relatedly, the agency has not been given the benefit of the public's views of the matter. Accordingly, we are not extending this final rule to roof glazing.

However, NHTSA is interested in learning more about roof ejections and would like to explore this area further. We plan to examine field data to better understand the current and future extent of roof ejections, and will seek to learn about the future implementation of sun/moon roofs in vehicles and ideas about effective ejection countermeasures through those portals. The results of this work may find that future rulemaking on roof ejections could be warranted.

[115] These rankings exclude ejections through non-glazing areas.

[116] It is important to emphasize that the RODSS data is not a statistically representative sample of field data.

2. Why We Are Focusing on the Side Windows Adjacent to First Three Rows

We received comments on which side window openings should be subject to ejection mitigation requirements, and how the final rule should determine the rear boundary that defines which rear window openings are subject to the standard.

i. First Three Rows

Advocates believed that the rule should extend to "occupants in the rear seats of small buses and 15-passenger vans." Batzer and Ziejewski stated that "[t]he reasoning behind why only the first three rows of seats are required to have coverage seems insufficient. Why would not every designated seating position in every vehicle have the same level of safety?"

Agency Response

The final rule will not extend side window coverage beyond three rows. SAFTEA–LU directed us "to reduce complete and partial ejections of vehicle occupants from outboard seating positions." Our position in the NPRM was that field data showed a compelling need for ejection countermeasures to cover daylight openings adjacent to the first two rows of seating coverage. The update of the field data presented in this final rule supports this decision. For all crash types, the first and second row windows rank 1st and 3rd (54.2 percent and 7.7 percent, respectively) as far as fatal occupant ejection routes.[117] When crashes are limited to target population crash types, i.e., crashes involving lateral rollovers and side impact crashes, these rankings (50.3 percent and 7.7 percent, respectively) for fatal ejections do not change.

Third row ejections are a very limited part of the ejection population; in target population crashes they constitute only 0.3 percent and 0.7 percent of fatalities and MAIS 3+ injuries. Nonetheless, we proposed coverage to three rows since many vehicles already on the market with three rows of seating are equipped with rollover deployable side curtain air bags that cover daylight openings adjacent to all three rows. This trend toward third row coverage has continued. Further, we wanted to cover as much of the side opening as reasonably possible because we were concerned that, if only the first two row windows were covered, in a rollover crash unbelted occupants contained from ejecting through the first two windows could be ejected from an uncovered opening adjacent to the third row. To reduce that risk of ejection, and importantly, given that the ejection mitigation side air curtains installed on current vehicles demonstrate the practicability and cost-efficiency of a curtain spanning the side of the windows from the first through third rows, we felt justified in our decision to provide coverage of third row windows. Vehicles the agency has tested for this rulemaking with air bag curtains covering rows 1, 2 and 3 windows are the MY 2005 Honda Odyssey, MY 2006 Mercury Monterey, MY 2007 Chevrolet Tahoe, MY 2007 Ford Expedition, MY 2007 Jeep Commander, MY 2008 Dodge Caravan, MY 2008 Ford Taurus X, and MY2008 Toyota Highlander. These designs are typically a single curtain covering tethered at the A and D-pillars.

Insufficient reasons are available to support requiring side daylight opening coverage into 4th and higher rows.[118] Fourth and higher row ejections are a very limited part of the ejection population; in target population crashes they constitute only 0.6 percent and zero percent of fatalities and MAIS 3+ injuries, respectively. Extending coverage to 4+ rows goes beyond curtain air bag coverage that we have seen on any vehicle. It may be possible technically to extend a single curtain air bag to cover beyond 3 rows, or conceivably manufacturers could use two curtain air bags to cover the entire side of the vehicle. However, for a two curtain system without intervening pillars there is likely a need to tether the curtains together in order to provide tension near the curtain bottoms. We do not know if curtains tethered together will be able to meet the performance requirements of the standard adopted today. Moreover, depending on the design, the costs for covering windows adjacent to 4+ rows may be substantial.

Glazing manufacturers have indicated that some vehicle manufacturers place advanced glazing in fixed window positions in the rearmost rows of large vans. However, we have not tested these glazing applications to the adopted requirements, nor has any data been submitted to the agency. Thus, the performance of a glazing-only application in these higher rows is not known to us.

Given the above uncertainties about the availability and cost of countermeasures that could be used to cover windows adjacent to 4+ rows, and in view of the small numbers of ejections through those windows, we decline to extend this final rule to window openings beyond the 3rd row.

ii. Method of Determining 600 mm Behind Seating Reference Point (SgRP)

The Alliance commented that limiting the daylight opening to 600 mm behind the SgRP of the last row seat or behind the rearmost portion of a seat not fixed in the forward seating direction, in combination with the targeting method, "can result in targets being located in cargo areas and/or behind and below seat backs and head restraints." The Alliance believed that rearward occupant motion is resisted by the seat back and head restraint and that this is not considered by the "600 mm method." It also stated its belief that the combination of seats and seat belts "greatly reduces the risk of head and upper torso ejection in the area created by the proposed '600 mm' method."

The Alliance suggested an alternative of using the Head Restraint Measurement Device (HRMD) defined in FMVSS No. 202a to establish the rearward extent of the head. This approach would provide the limit of the daylight opening in the 3rd or last row.

Honda suggested that the fact that the 600 mm limit in FMVSS No. 226 is the same as in FMVSS No. 201 may not be appropriate when considering that FMVSS No. 201 has a different basis and objective than that of ejection mitigation. Honda suggested a different procedure to determine the daylight opening limit, which takes into consideration the movement of belted occupants in rollovers as well as the many fore-aft and seat back angle adjustments. Honda's method is based on the height of a 95th percentile occupant, with 200 mm added (1,018 mm) to account for upward movement of a belted occupant during a rollover. A 1,018 mm radius arc is centered at the SgRP and swept through the daylight opening. A reference line is drawn parallel to the torso line and translated 155 mm rearward and perpendicular to the torso line. The arc and the rear reference line provide the boundaries for the daylight opening.

NTEA stated, "NHTSA [should] consider adopting testing parameters similar to those found in [S6.3(b)] FMVSS 201 to effectively exclude any targets that are located behind the forward surface of a partition or bulkhead * * * . We believe it is neither practical nor beneficial to require test target points that could not possibly be contacted by the head of an occupant seated forward of the partition."

[117] These rankings exclude ejections through non-glazing areas. The second ranked fatal ejection route is the windshield, for both lateral rollovers and side impact crash populations.

[118] 74 FR 63201

Agency Response

The Alliance objected to the 600 mm limit because it "can result in targets being located in cargo areas and/or behind and below seat backs and head restraints." The Alliance's comment suggesting that seat belts would reduce the risk of an occupant's head and torso being ejected in the area behind the seat back and head restraints is not consistent with this final rule's goal of reducing partial and full ejections of belted and unbelted occupants. Similarly, the suggested use of the HRMD to define the limit of the opening in the third row disregards that this final is intended to protect belted and unbelted occupants.

It is correct that the 600 mm limit can result in target areas in the cargo area and/or behind and below the seat back. We chose that limit to address what can occur in the field. Our field data assessment, discussed in section IX.b. and in our technical report, has several cases where occupants were ejected rearward of their initial seated position. In RODSS case 5032 (SCI CA09061) a driver was completely ejected through the left 3rd row quarter panel window. In NASS case 2006–79–89 the driver was partially ejected from the left 2nd row window. In SCI case DS04016, an infant seated in the middle of the 2nd row was ejected through the 3rd row quarter panel window.

These cases demonstrate how rollovers, particularly of the long duration multiple quarter-turn variety, are chaotic events with complex vehicle and occupant kinematics that can result in occupants moving rearward of their seating position. In addition, rollovers can be preceded by planar impacts with a substantial rearward component, resulting in occupants moving towards the rear of the vehicle. The bulk of the benefits from this standard are for unbelted occupants. The limitations suggested by the vehicle manufacturers are not consistent with protecting this population. For the agency, the issue is not whether the standard will cover some area rearward of a seating position, but how far behind the seating position.

We decline to adopt Honda's technical method for limiting the daylight opening. Our technical report explains that the Honda method would result in a smaller area of coverage and potentially fewer impact targets than the NPRM method. Briefly stated, a small part of the area described by Honda would actually be farther rearward than the NPRM limit. However, the Honda derived limit has a smaller area overall. For some large windows, using the Honda method results in only two targets fitting in the window opening, whereas the NPRM's method results in four impact locations. Further, the Honda method increases the complexity of the standard.

Honda suggested that selection of a 600 mm rearward limit, to the extent that it is potentially based on FMVSS No. 201, may be too great a distance. We do not agree on this point. To the extent that FMVSS No. 201 attempts to protect occupants from interior impact in all crash modes, including rollovers, we believe that FMVSS No. 226 should be no less expansive in its rearward coverage than FMVSS No. 201. Moreover, since rollovers make up the largest portion of the target population for FMVSS No. 226, and because rollovers result in more chaotic occupant motion than any other crash type, it is our view that FMVSS No. 201's coverage should not prescribe the limits of the coverage of FMVSS No. 226.

The suggestions of the Alliance and Honda to reduce the 600 mm value will dampen the effectiveness of this final rule in protecting unbelted occupants in rollovers. Accordingly, we deny the requests. (We respond to NTEA's suggestion in the "Vehicle Applicability" section of this preamble.)

iii. Increasing 600 mm Limit for Vehicles With One or Two Rows of Seats

The NPRM proposed to limit the requirement to provide side daylight opening coverage to an area bounded by a plane 600 mm behind either the SgRP of a seat in the last row (for vehicles with fewer than 3 rows) or the SgRP of a seat in the 3rd row (for vehicles with 3 or more rows). As a result, for a vehicle with only one or two rows and with a cargo area behind the seats, all or part of the cargo area daylight opening rearward of that 1st or 2nd row would have been excluded under the NPRM.

After reviewing the comments from glazing manufacturers and Advocates and the updated field data showing the prevalence of ejections through side glazing in the area of the first three rows, we have reconsidered the proposed 600 mm limit for vehicles with less than 3 rows. We have also reconsidered this issue after reflecting on AIAM's comment which asked for clarification on whether a vehicle having windows to the rear of the last row of seats (*e.g.,* 2 rows of seats but a third side window next to the rear cargo area) would be subject to testing of the third side window.

Agency Response

For vehicles with only one or two rows of seating, we have decided to increase the 600 mm distance to 1,400 mm, measured from the SgRP of the seat in the last row. By extending the distance to 1,400 mm, we are subjecting more area of glazing to testing, *i.e.*, more of the glazing area in cargo area behind the 1st or 2nd row will need an ejection mitigation countermeasure. The window openings subject to testing under the 1,400 mm limit are those that would have been adjacent to a third row seat had the vehicle had a third row.

There is a safety need to cover this cargo area. In the NPRM (*see* Tables 16 and 17 of the NPRM preamble), we provided the distribution of ejected occupants by ejection route for all crashes. In these data tables, we did not have a category for cargo area ejections because data were not available. For this final rule, we undertook a manual review of each case to update ejection route data provided earlier in this preamble. In that review, we found that 0.5 percent of ejections in all crashes (and target population crashes) were ejected through the cargo area behind the 2nd row.[119] This is slightly more than the percentage for 3rd row ejections.

Further, our field data assessment discussed in section IX.b included a number of cases where occupants were ejected rearward of their initial seated position. As described earlier, in RODSS case 5032 (SCI CA09061), a driver was completely ejected through the left 3rd row quarter panel window. In NASS case 2006–79–89, the driver was partially ejected from the left 2nd row window. In SCI case DS04016, an infant in the middle of the 2nd row was ejected through the 3rd row quarter panel window. These cases demonstrate how rollover crashes are complex turbulent events that can propel unbelted occupants rearward in the vehicle. Rollovers involving planar impacts having a substantial rearward component can thrust an unbelted occupant rearward toward the rear window openings in a manner unlike other crash types.

Vehicles are already being produced that have side air bag curtains covering rows 1, 2 and 3 row windows (*e.g.,* the MY 2005 Honda Odyssey, MY 2006 Mercury Monterey, MY 2007 Chevrolet Tahoe, MY 2007 Ford Expedition, MY 2007 Jeep Commander, MY 2008 Dodge Caravan, MY 2008 Ford Taurus X, and MY 2008 Toyota Highlander). The designs typically use a single curtain

[119] There were no ejections through the cargo area windows behind any other row.

covering tethered at the A- and D-pillars.[120] Since there are designs that provide three rows of coverage, we believe that covering the cargo area behind the 1st or 2nd row of a vehicle up to window openings adjacent to where a third row would have been, offers no more of a technical challenge than manufacturers face in covering all openings adjacent to the 3rd row for vehicles with three rows.

Our FRIA calculates the cost effectiveness of extending a two-row curtain to cover the cargo area behind the second row and finds that it has a similar level of cost effectiveness as 3rd row coverage.[121] Accordingly, it is reasonable and appropriate for this final rule to include impact targets in window openings in the cargo area behind the 1st and 2nd row for vehicles with one or two rows of seating, if the window openings are located where they would have been adjacent to a third row seat had the vehicle had a third row.

We have determined that a third row seat would have been encompassed in an area bounded by a transverse plane 1,400 mm behind the rearmost SgRP of a first row seat (for vehicles with only one row of seats) or a second row seat (for vehicles with two rows of seats). Thus, we are extending the NPRM limit for these vehicles that have a cargo area behind the first or second row and no other row of seats, by 800 mm. We arrived at the 1,400 mm value through a small study of curtain coverage length of late model 3 row vehicles beyond the 2nd row SgRP. This study included 14 of the MY 2006 to MY 2009 vehicles that were in the agency impactor testing program. These vehicles had 3rd row rollover curtains or curtains covering the cargo area behind the second row. Our measurements indicated that a 1,400 mm dimension rearward from the 2nd row SgRP would cover the entire daylight opening area for all except one of the vehicles.[122]

The final rule will maintain the 600 mm value for vehicles with 3 or more rows.

3. Answers to Questions About Method for Determining Three-Row Area

i. AIAM and Hyundai asked: (a) Is the targeting procedure done on the entire daylight opening and then the targets are limited to those that are in the area forward of the 600 mm line; or (b) is the targeting procedure done only on the area forward of the 600 mm line. In addition, if (a) above is the answer, Hyundai sought clarification on whether the entire target outline needs to be located in the daylight opening or just the center of the target outline.

Our response is that the targeting procedure is performed on just the area forward of the 600 mm line (the second answer above), for a 3 row vehicle. (As indicated above, this final rule specifies this dimension as 1,400 mm for vehicle with fewer rows.) Proposed S5.2.4.2(a) stated in part that "the transverse vertical vehicle plane defines the rearward edge of the daylight opening for the purposes of determining target locations." The regulatory text adopted by this final rule (at S5.2.1.2(a)) slightly modifies the proposed text by indicating that the transverse vertical plane defines the rearward edge of the offset line (rather than the daylight opening) for the purposes of the targeting procedure performed on the daylight opening. To reiterate, the wording does not specify that the targeting procedure is performed on the entire opening and then only the targets forward of the 600 mm limit are used.

ii. NTEA asked if side daylight openings behind occupants of side facing seats would be subject to the standard since the SgRP is parallel to the opening. Similarly, for rear facing seats, NTEA asked whether the side opening associated with such a seat is tested and would glazing on the opposite side of the vehicle be tested. Finally, NTEA asked if there was a lateral distance from any side glazing to the SgRP of a forward or rear-facing seating location, beyond which the requirements for the testing would not apply.

Our answer is that daylight openings adjacent to both side and rear facing seats are potentially required to be targeted if they are part of the first three rows of seating. The definition of "row" adopted by the standard is still applicable. If these seats are fixed in a side or rear facing direction, the SgRP is not used to determine the rearward limit of the daylight opening. Rather, the limit is determined by the location of a vertical lateral vehicle plane located behind the rearmost portion of the rearmost seat. See proposed S5.2.4.2(a) and (b), and S5.2.1.2(a) and (b) in this final rule.

Daylight openings on either side of the vehicle are subject to testing even if the seat or seats in that row are on the opposite side of the vehicle. There is no limit on lateral distance from a seat to a daylight opening that would exclude an opening from coverage. Crash data from the field have shown that an occupant on one side of a vehicle can be ejected out of an opposite side window. These provisions are to reduce the likelihood of such ejections.

e. How We Are Testing The Ability Of These Side Windows To Mitigate Ejections

1. What is a "Window Opening"?

The NPRM proposed to define "side daylight opening" as—

> other than a door opening, the locus of all points where a horizontal line, perpendicular to the vehicle vertical longitudinal plane, is tangent to the periphery of the opening, including the area 50 millimeters inboard of the window glazing, but excluding any flexible gasket material or weather stripping used to create a waterproof seal between the glazing and the vehicle interior.

i. 50 mm Inboard of the Glazing

Reference to the area 50 mm inboard from the window glazing was intended to account for interior vehicle structure that might be in the vicinity of the daylight opening, which could restrict the size of the opening through which an occupant could be ejected. In other words, we wanted to include, as part of the opening, vehicle structures that were within 50 mm of the window opening, if those structures could restrict ejection through the opening.

The Alliance generally agreed with the proposed definition of daylight opening, except the commenter suggested extending the distance from the inside of the window glazing from 50 mm to 200 mm. The Alliance believed that the proposed 50 mm value "may result in structures or trim proximal to the daylight opening to be removed to gain access to a target location. Removal of these structures or trim could result in an unintended consequence of laboratory performance reduction of the ejection mitigation countermeasures."

AIAM did not request a change in the 50 mm value, but rather asked for clarification about the inclusion of "items of trim such as grab handles [that] may extend into the window area, potentially interfering with the motion of the impactor during a test." AIAM suggested that the standard specify one of the following: removing the trim item prior to the test, adjusting the target location so that the trim item is not engaged during impactor movement, conducting the test notwithstanding the interference of the trim item, or eliminating the target from testing requirements. Similarly, Honda and Hyundai requested guidance on

[120] The MY 2007 Chevrolet Tahoe uses a separate curtain to cover the 3rd row window.

[121] These cost effectiveness estimates are based on the cargo area and/or 3rd row area coverage alone. If they were to be lumped together with the first 2 rows of coverage, they become even more cost effective.

[122] More details of this study can be found in the technical report supporting this final rule.

positioning and/or removal of interior components, such as sun visors, the instrument panel, interior and exterior mirrors, and grab handles. Hyundai stated "certain interior structures which do not restrict the size of the daylight opening could still interfere with the linear travel of the impactor headform in the area 50 millimeters or more inboard toward the vehicle centerline from the window glazing interior surface."

Nissan asked that testing be performed without the headliner. It stated: "Nissan does not anticipate the headliner affecting performance of the side curtain air bag system. Though the headliner might affect the initial trajectory of the deploying side curtain air bag, the proposed delay times of 1.5 seconds and 6 seconds ensure sufficient time for full deployment, allowing the curtain air bag to correctly position itself prior to contact with the impactor. Replacing the headliner between tests would unnecessarily increase test complexity and could result in lab error."

Agency Response

We believe the Alliance's request that the definition for side daylight opening be modified to increase the 50 mm distance inside the window has some merit. We have examined interior trim components, such as panels covering the vehicle pillars, and found that surfaces that should be considered as part of the outline of the daylight opening can be more than 50 mm inside the window glazing. Figure 12 is a schematic showing the cross-section of a hypothetical door panel and glazing whose horizontal tangent is 60 mm inside the glazing. Based on the vehicles we examined, we believe that increasing the distance to 100 mm will be sufficient to encompass interior borders and other components around the daylight opening that might not be easily removed and whose removal may have an unknown effect on the performance of the countermeasure. These components could have a positive effect on ejection mitigation, so our decision is that the determination of the side daylight opening should be made with the components in place.

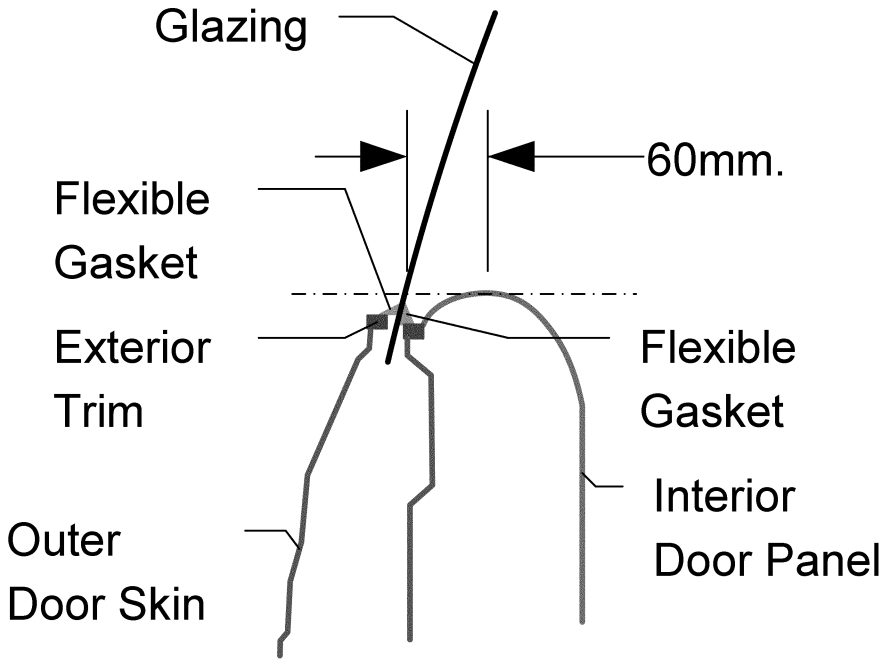

Figure 12 – Cross-section of a door and glazing providing an example of interior trim within 100 mm of the inside of the glazing opening dictating the daylight opening.

We will not increase the distance to 200 mm, however. A 200 mm distance is excessive and potentially includes more vehicle components in the determination of the window opening periphery than necessary. Although the linear impactor travels along a lateral horizontal path, during a rollover, people moving towards the window opening would not. Objects 200 mm from the window opening may have no ability to limit the potential for ejection. The Alliance did not provide a rationale justifying a 200 mm limit.

One concern we had relative to increasing the inboard distance from 50 mm to 100 mm was that even the 100 mm distance increases the possibility of including inappropriate vehicle components in the determination of the periphery of the window opening. The components should not be included because they are not relevant to the actual ejection portal, *i.e.,* they are unlikely to have a positive effect in mitigating ejection.

One of these components is the vehicle seat. In S6.3 of the proposed regulatory text, we expressly specified that the seat may be removed to conduct the test in an uncomplicated manner. Relatedly, in view of our increasing the inboard distance defining the opening to 100 mm, the final rule at S3 will specifically exclude seats from consideration in the definition of daylight opening.

Similarly, the agency also believes that we should expressly list grab handles as components that will not be included in the determination of a "side daylight opening." Both Hyundai and AIAM asked for clarification of the treatment of grab handles. Hyundai's comments showed two examples of grab handles that were both outside of the 50 mm limit (108 mm and 75 mm) proposed in the NPRM. At a distance

limit of 100 mm, one of these grab handles would be included, unless specifically called out for exclusion.

We believe grab handles should be excluded from contributing to the daylight opening for several reasons. First, we think it unlikely that they will contribute anything positive to ejection mitigation. Second, we believe there is a possibility that grab handles could interfere with the ejection impactor in the test. The final rule will add them to the definition of side daylight opening in S3 as an item that is excluded from consideration in the definition of the daylight opening (and to S6.3 as an item that can be removed if it obstructs the path of the travel).

ii. Conducting the Test With Various Items Around the Window Opening

The comments from AIAM, Honda, and Hyundai also extend to items of interior structure, aside from grab handles, that are not included in the definition of the daylight opening (because they have no potential for mitigating occupant ejection), but could restrict the travel of the impactor headform. AIAM suggested multiple ways of handling these items other than their removal, *i.e.*, changing the target position, eliminating a target, or performing the test with the item in place. In the NPRM, S6.3 specifically allowed for the removal of seats and the steering wheel. Our goal was to make sure the testing could be performed, even if these items need to be removed, as these items would provide no impediment to ejection in the real world.

We agree with AIAM, Honda, and Hyundai that there is a need to provide more specificity in this part of the standard (S6.3 and S6.4 of the final rule). One item mentioned by commenters was the exterior mirror. We believe this component is worthy of specific mention in the regulatory text as being an item that should be removed or adjusted so as not to impede the motion of the headform beyond the vehicle. As indicated by the National Forensic Engineers in its comments, exterior mirrors may break off during rollovers and are unlikely to have a role in mitigating ejection.

In the final rule, S6.3 will now specify that steering wheels, seats, grab handles and exterior mirrors may be removed or adjusted to facilitate testing and/or provide an unobstructed path for headform travel through and beyond the vehicle. In addition, we have added the steering column to the list since it is attached to the steering wheel and may be the means by which the steering wheel is removed or adjusted.

Beyond these components mentioned in S6.3, there are others that may obstruct the impactor path. For example, one could conceive of a rear drop-down entertainment center that blocks the upper targets. To address these items, S6.4 in the final rule will indicate that other vehicle components or structures may be removed or adjusted to provide an unobstructed path for the headform to travel through and beyond the vehicle.

Nissan requested that the final rule allow testing on a "cut body" and not a fully trimmed vehicle. It also requested that testing be done without the headliner since Nissan believes that the headliner will not affect the test results, but may instead result in laboratory error. Similarly, TRW wanted testing on a buck to be allowed.

We decline to make these changes requested by Nissan and TRW in the final rule. Manufacturers are free to conduct certification testing without the headliner, or on a cut body or test buck, as long as they are assured that the vehicle would meet FMVSS No. 226 when tested by NHTSA in the manner specified in the standard. We particularly understand why manufacturers might want to test on a cut body or buck during developmental testing. However, the agency prefers to test a vehicle in as near the as-manufactured condition as practicable, to better ensure that the performance we witness in the compliance laboratory is representative of the performance of the vehicle in the real world.

However, we recognize that there are practical difficulties of testing the ejection mitigation countermeasure in a laboratory. We have decided that S6.4 in the final rule will include language specifying the adjustment or removal of vehicle structure that interferes with the ejection propulsion mechanism and headform travel, but only to the extent necessary to allow positioning of the ejection propulsion mechanism and unobstructed path for the headform to travel. It has been our experience that for daylight openings that are not located in doors, there may be limited access on the opposite side of the vehicle to pass the impactor propulsion mechanism through. This may then require removal of a fixed window and or cutting of sheet metal to allow access on the non-tested side of the vehicle. These modifications will not affect the results of the impact testing.

iii. Removing Flexible Gasket Material For the Purpose of Determining the Daylight Opening

To keep the test area as large as possible, the proposed "daylight opening" definition excluded any flexible gasket material or weather stripping used to create a waterproof seal between the glazing and the vehicle interior. Flexible material is unlikely to impede occupant ejection through the opening.

Honda stated that while it understood the agency's desire to exclude gasket material from the daylight opening definition, it was concerned about the material being difficult to remove or damaged during removal for determination of the opening. Honda proposed an alternative where the gasket material is included in the daylight opening, but the 25 mm offset line defined in proposed S5.2.1(b), is decreased. It stated that this "retains the intention of addressing occupant ejection through side glazing, but test repeatability and validity are better assured." Similarly, TRW recommended that the opening be measured considering any gasket/weather stripping as potentially defining the opening, but the offset line be 20 mm from the opening rather than 25 mm. Honda stated that manufacturers would not enlarge the gasket material to reduce the daylight opening because of "styling, appearance and consumer acceptance." Nissan stated that "removing this [gasket] material prior to the test could expose the side curtain air bag system to sharp edges on the vehicle that it would not normally be exposed to during deployment and adversely affect system performance."

Both the AORC and TRW recommended that the agency obtain CAD data from the vehicle manufacturers and use this to determine the daylight opening and offset line. They believed that this would obviate the need for removal and reinstallation of the gasket/weather stripping, which they believed could lead to potential test variability.

Guardian, a glazing supplier, commented that: "The NPRM defines a window opening as the 'daylight opening' (page 63204). We believe the opening should include all related trim and gaskets that could be removed with the glass in a rollover situation."

In contrast, Takata indicated agreement with the proposed method of determining the target location.

Agency Response

We disagree with commenters that wish to allow gasket material or weather stripping to have a part in defining the opening. We continue to believe that this has the potential of causing an unnecessary reduction in the size of the opening, which may reduce the stringency of the test.

Most commenters wishing to include gasket material in the definition were concerned about potential test problems associated with removal and reinstallation of this gasket material or weather stripping in order to determine the daylight opening. We address the issue of testing with this material in the next section. In summary, we do not share this concern.

Both AORC and TRW suggested that CAD information submitted by manufacturers could be used by the agency to define the daylight opening, rather than removing any gasket material. It is certainly true that the agency can ask for information from manufacturers and this has been done for other FMVSSs [123] and is a part of FMVSS No. 226's framework concerning the rollover sensor.[124] However, we do not believe such a requirement is needed regarding the measurement of the window opening. We prefer to have a test procedure within the regulatory text of the standard that we can use to independently assess factors used in the compliance test, such as the size of the window opening, rather than depend upon information provided by the manufacturers.

TRW and Honda suggested a reduction in the offset line distance, defined in proposed S5.2.1(b), if the agency chooses to include gasket material in measuring the daylight opening. Honda did not suggest a value, but TRW recommended a reduction from 25 mm to 20 mm. No data were provided to indicate that the 5 mm reduction would compensate for reduction in the size of the opening that would occur from inclusion of the gasket material. There could still be a risk that measuring the size of the opening with gasket material in place could artificially reduce the testable area in a manner not in the best interest of safety. Given our decision to exclude the gasket material, we are not reducing the offset line distance.

On the other hand, we do believe that a small change in the definition of side daylight opening is necessary as it relates to gasket material and weather stripping. The NPRM referred to "flexible gasket material or weather strip[p]ing used to create a waterproof seal between the glazing and the vehicle interior." During our research, it became apparent that gasket material, in addition to sealing the glazing, may also provide a weather-tight seal between the door and the door frame. For purposes of defining the window opening, this gasket material should be treated the same as gasket material used for sealing glazing, because if it were not, it could artificially reduce the size of the daylight opening. Accordingly, S3 in this final rule excludes flexible gasket material or weather stripping used to create a waterproof seal between the glazing and the vehicle interior and the door and the door frame from the definition of daylight opening.

iv. Testing With Flexible Gasket Material In Place

In the section above, we stated that the final rule will continue to define the daylight opening without considering flexible gasket material or weather stripping. Thus, this material may, on some vehicles, need to be temporarily removed. However, this does not mean that the testing will be performed without this material. The NPRM proposed that the headform test be conducted with the flexible gasket material or weather stripping in place.[125]

The air bag suppliers commenting on this issue supported testing with weather stripping. TRW stated "the weather stripping must be present to provide representative inflatable countermeasure deployment, and occupant interaction with the countermeasure. Further, the absence of weather stripping during the test, could expose edges which could damage the countermeasure, affecting test performance." Takata stated that they "agree with the NHTSA's proposal to determine the target location and carry out the testing with [the gasket] materials."

As indicate in the previous section, most commenters wishing to include gasket material or weather stripping in defining the daylight opening were concerned about potential test problems associated with removal and reinstallation. We have not experienced difficulty or complexity in dealing with the gasket material in our testing. It has been our experience that gasket material, due to its flexible nature, can be moved aside to allow access to the vehicle surfaces that create the daylight opening. If the gasket covers the relevant vehicle surface that defines the daylight opening and needs to be removed temporarily to allow access to that area, once the measurement is made removal of the gasket need not be done again to define the opening. No data was submitted to indicate such a single removal and reinstallation or, for that matter, multiple removals and reinstallations, would have any effect on test results. We do not believe that removing and reinstalling the gasket will have any notable effect relative to other factors influencing test variability, such as normal manufacturer build-to-build variability.

We also agree with commenters who suggest that testing without this material may unnecessarily expose the air bag to sharp surfaces. In addition, the agency prefers to test a vehicle in as near the as-manufactured condition as practicable. Thus, in the final rule we have not added any regulatory text that indicates that flexible gasket or weather stripping will be removed during testing, as we have done in S6.3 for other parts of the vehicle.

v. Metal Dividers in Glazing

Hyundai requested clarification on how potentially non-structural steel dividing elements in a window opening should be handled. Our answer is such elements would serve to define the daylight opening since they do not consist of glazing. We currently have no reasonable way to exclude these dividing elements based on the extent to which they may or may not add structural integrity to the vehicle.

2. How We Determine Impactor Target Locations In An Objective And Repeatable Manner

i. Testing in "Any" Location

The Alliance, AIAM, Honda, Hyundai, AORC, TRW and Takata all requested that the final rule maintain defined locations for the impact targets as opposed to allowing any point in the window opening to be targeted. The Alliance AIAM, Honda, and Hyundai suggested that testing at any target point in the window opening would increase the testing burden for manufacturers without providing any meaningful information, and would introduce uncertainty in the certification process. The Alliance stated that "[t]he proposed *up to 4 targets* (without 'target reconstitution') achieves NHTSA's stated goal to 'assess how well the curtain covers the perimeter of the window opening' (FR 63204)." (Emphasis in text). AORC stated that "four impact points per window opening sufficiently represents the 'worse case' * * *." TRW also agreed with the view that the NPRM "adequately cover[s] the window opening by requiring that the most demanding locations of the opening be tested." Honda stated, in reference to

[123] For example, S22.4.1.2 of FMVSS No. 208 requires knowledge of the volumetric center of the static fully inflated air bag. The agency requires this information from vehicle manufacturers.

[124] The agency can ask the manufacturer to provide information about the rollover sensor's deployment capabilities. See proposed S4.2.4, *Technical Documentation.*

[125] 74 FR 63205

target points such as A1, that "coverage of these most challenging points by FMVSS No. 226 will successfully provide ejection mitigation with the adoption of this regulation." Both TRW and Takata suggested that the specification of exact target points supports a high level of repeatability, reproducibility and robustness of testing. In contrast, Advocates stated that the fixed target method limits the areas to be tested and performance outside of those areas will not be known.

Agency Response

We have decided to use the methodology of the NPRM to define the target points. First, we agree with the Alliance that the procedure using four defined targets achieves the agency's goal of assessing the coverage of the ejection mitigation countermeasure. We also agree with Honda's comment that the fixed target method will test or come very close to testing the worst case locations.

In response to Advocates, in developing the final rule's test procedure, we sought to achieve a full and robust assessment of side window opening coverage. We intentionally selected target locations that we believed will provide the greatest challenge to the ejection countermeasure. Based on our test data to date, we remain confident that this is the case with our current target selection method. If we were to test at any location, manufacturers will have less certainty in the certification process. Whether this would result in increased test burden is not clear. Although the concept of testing the window opening at any potential impact point has merit, we do not believe it is necessary for this standard to reduce certainty, since testing at defined target points will achieve our safety objectives.

ii. Methodology

The Alliance believed that the target locations should be determined in a manner consistent with the methods utilized by GM and Ford, which are based on occupant seating positions and "up and out" occupant kinematics in rollover events. The Alliance stated that GM uses three target points per window adjacent to a row of seating: (1) Upper rear; (2) centroid of window opening; and (3) head position of 5th percentile female with the seat back at a 10-degree rearward incline from vertical and the head position projected forward 30 degrees to the lateral axis. The Alliance indicated that, contrary to what was stated by the agency in the NPRM, for some vehicles, the lower forward GM target does not align with position A1. It stated that Ford uses three in the front window and two in the rear windows. Ford's front window locations are the same as GM's except that the target corresponding to the 5th percentile female position is projected forward from the lateral axis at 15 degrees rather than 30 degrees. For rear windows, Ford eliminates the 5th percentile female head target location.

The Alliance also requested that the rear window targets be reversed, i.e., the mirror image from that proposed by the agency. It stated that this would provide a "more consistent protocol" because the front window and rear window targets would be located in the same way, while achieving the stated goal of assessing "how well the curtain covers the perimeter of the windows opening."

The Alliance disagreed with the proposed method to add back a target (reconstitution). It believed that "[t]he combination of FMVSS 214 and FMVSS 226 requirements renders testing at any point and 'target reconstitution' unnecessary and redundant to provide enhanced side curtain coverage."

Batzer and Ziejewski indicated that "two impacts against the upper half of the glazing should be adequate." The commenter stated that for the bottom half of the window, the use of a headform is inappropriate. The commenter stated that known occupant danger for this region of the glass is arm and leg excursion and suggested that "a new device that simulates a forearm or calf/foot can, and should, be developed to validate the side curtain airbag against this mode of excursion. This need not be a 10 mph impact, but merely an excursion test."

Agency Response

The agency has decided not to reduce the number of target locations as requested by the Alliance and Batzer and Ziejewski. As expressed in Honda's comment, coverage of the most challenging points like A1 are necessary for FMVSS No. 226 to successfully ensure that adequate ejection mitigation is provided. The same level of ejection mitigation performance is not assured by the suggested alternative procedures.

We believe that three target locations are insufficient (and more so for the two locations resulting from the Ford procedure for rear windows) to test the entire perimeter of the daylight opening. The Alliance indicated that the GM and Ford target points are consistent with the assumption of "up and out" rollover occupant kinematics.[126] However, such an assumption ignores the possibility that during long duration, multiple quarter-turn rollovers, occupants can move to openings after impacting the ejection countermeasure, and impact the countermeasure multiple times. In addition, the GM and Ford impact locations seem to be most relevant to the belted occupant situations. As we have stated many times, the bulk of the benefits of this final rule come from unbelted occupants. The suggestion of Batzer and Ziejewski for two impacts near the upper part of the window is not well defined. It is not clear to us if the commenter is requesting two impact locations or two impacts on the same countermeasure. The latter would only be possible for a glazing-only countermeasure. If it is the former, it is unsatisfactory for the same reasons that we have expressed about the Ford procedure. We know from our own testing of vehicle systems that testing point A1 is vital to determine if the countermeasure provides full and robust coverage.

We are also declining the Alliance request to modify the target locations for rear windows such that they are the reverse of that proposed in the NPRM for rear windows. In Figure 13 below, illustrating the suggested Alliance targeting, it is shown that the Alliance procedure targeting can provide a large gap for daylight openings with a forward rake. It is our experience that, to the extent that the rear windows have a rake, this rake is forward. For rear window openings, matching the front window pattern creates a large gap of coverage, as shown in Figure 13. Further, the Alliance methodology crowds the targets closer together, raising the potential for forcing the elimination of targets based on the target reduction methodology. We are not aware of any reason why it is important to have consistency between the protocol used in the front and rear windows. Accordingly, we are denying the Alliance and Batzer and Ziejewski requests.

[126] The commenter did not define the meaning of "up and out." Based on the context of the Alliance's use of the "up and out" terminology, we assume that the term means that occupants would be ejected near their longitudinal vehicle location at the time of the rollover.

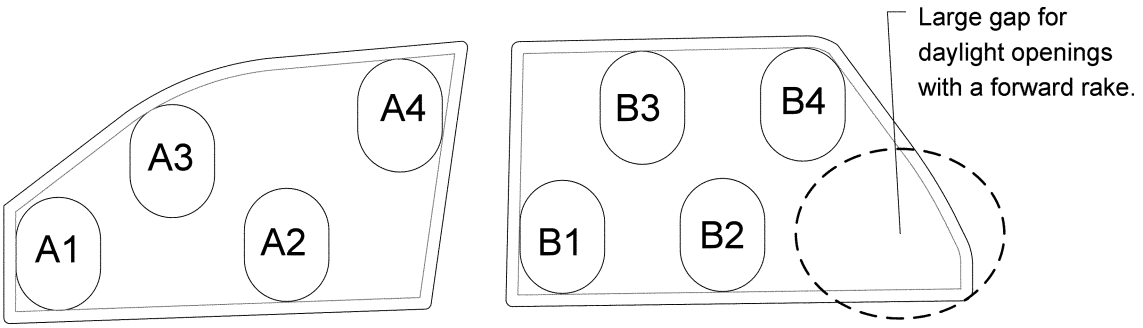

Figure 13 – Result of Alliance proposal for rear window targets with a forward rake.

iii. Reorienting the Targets

The Alliance, Hyundai, AORC, TRW, NTEA and Pilkington were all opposed to reorienting the impactor headform.[127] The Alliance stated that "[if a daylight opening is such that the headform cannot fit with 25 mm clearance when oriented with a vertical long axis, then NHTSA's goal to reduce the risk of head and upper torso ejection has already been achieved by the architectural characteristics of the vehicle, particularly when combined with belt usage."

Hyundai stated that they "found that the side daylight opening of some vehicles with high belt-lines [128] could not fit the outline of the impactor headform within the 25 millimeter offset line of the window opening." [129] Nonetheless, Hyundai opposed the rotation of the headform by 90 degrees for windows with small vertical dimensions where no targets will fit with the typical impactor orientations. It stated "these windows are unlikely exit portals." TRW believed that "revising the orientation of the headform for certain window shapes, while not doing so for others, does not appear to be based on any real world rationale." The Alliance, AORC and TRW raised testing concerns related to reorienting the impactor. The Alliance stated: "Arbitrary deviations from [the NPRM] approach introduce unnecessary setup variation and also increase the complexity of the impactor design."

The agency has decided that the final rule will allow the reorientation of the targets and the associated reorientation of the impactor headform, under specific conditions. We believe that, all things being equal, the size of an uncovered side window has some correlation to the risk of ejection. A gap in coverage of a small window could be an ejection portal, just as it could be for a large window. If the test procedure in the final rule does not allow for rotation of the headform, it could allow large gaps in the window coverage that could provide an ejection portal.

We examined two issues in investigating whether the headform should be reoriented. The first issue involved reviewing the number and location of impact targets for vehicles with relatively long and narrow side daylight openings (high beltline vehicles) under the NPRM targeting procedure. The second issue involved the pluses and minuses of systematically rotating the target outline in small increments in order to fit a single target in a window opening that would otherwise not accommodate a target.

In an April 15, 2010 meeting with NHTSA, Ford showed the impact locations for many of their current and future vehicles.[130] One of the vehicles was a MY 2010 Ford Taurus. In Table 40, we have summarized the number of impact targets in each daylight opening for many of the Ford vehicles, as provided by Ford.

TABLE 40—NUMBER OF TARGETS PER DAYLIGHT OPENING FOR FORD MODELS, ACCORDING TO THE NPRM TEST PROCEDURE

MY	Model	Type	Row 1	Row 2	Row 3
2010	Taurus	PC	1	1	NA
2010	Lincoln MKS	PC	2	2	NA
2010	Lincoln MKT	SUV	2	4	NA
2010	F150 Crew Cab	PU	4	4	NA
2010	F150 Super Cab	PU	4	2	NA
2010	F150 Regular Cab	PU	4	NA	NA
2010	Flex	SUV	4	4	4
2010	Mustang	PC	3	0	NA
2011	Fiesta	PC	3	2	NA
2012	Focus	PC	2	2	NA
2012	Future SUV	SUV	3	3	NA
	Next Gen. Full Size Van	Van	4	4	4

This table indicates that, without target rotation, more than half [7/12] of the vehicles on the list would have fewer than four targets in the row 1 windows. Similarly, for the second row windows, seven of 11 would have fewer

[127] This is the same as saying they did not want to rotate the targets, because the impactor headform orientation is aligned with the target orientation.

[128] The beltline of a vehicle is a term used in vehicle design and styling referring to the nominally horizontal imaginary line below the side glazing of a vehicle, which separates the glazing area from the lower body.

[129] NHTSA–2009–0183–0044, p. 6.

[130] Docket No. NHTSA–2009–0183–47.1

than four targets. This level of target reduction is much greater than we have seen in our research testing. There are several potential reasons for this emerging picture. First, manufacturers initially focused their introduction of rollover curtains on SUVs and pickups, which typically have larger windows. Second, the trend towards higher beltlines has reduced the height of windows.

The question then becomes, how extensive is the window opening coverage for windows with fewer than four vertically oriented targets? To help answer this question we also examined a partial side view of a MY 2010 Chevrolet Camaro. This view is shown in the technical report for this final rule. In Figure 14 below, we drew the outline of the daylight opening and the associated 25 mm offset line for illustration purposes. (These are approximations given the resolution of the image and given that we did not know the dimensions of the flexible gasket material around the opening. Also, we could not determine the exact outline at the forward lower corner because the view was obscured by the outside mirror. However, to the extent this drawing differs from the actual image of the vehicle, the differences would not be significant for the purposes of discussion in this section.)

If the targeting procedure defined in the NPRM is followed, the four initial target locations (primary and secondary targets) are as shown in the top graphic in Figure 14. (The procedure is explained in detail in the NPRM at 74 FR at 63205–63211.) Under the NPRM procedure, if the horizontal distance between target centers is less than 135 mm and the vertical distance between target centers is less than 170 mm, the targets are considered to be significantly overlapping and are eliminated. At the end of the process, only a single target would remain. See middle graphic of Figure 14(b). The forward edge of this target is 464 mm from the forward edge of the daylight opening outline, which would leave a large opening forward of the target untested. Occupant ejection could occur through that opening. Further, if the daylight opening were less than 1 mm smaller (a vertical dimension of less than 276.1 mm), under the NPRM procedure, there would be no targets in the window opening.

If we perform the same targeting procedure as defined in the NPRM except with a horizontally-oriented target outline (the long axis oriented horizontally), the result is the four targets shown in the bottom graphic of Figure 14. The forward edge of the most forward target was 173 mm from the forward edge of the daylight opening.

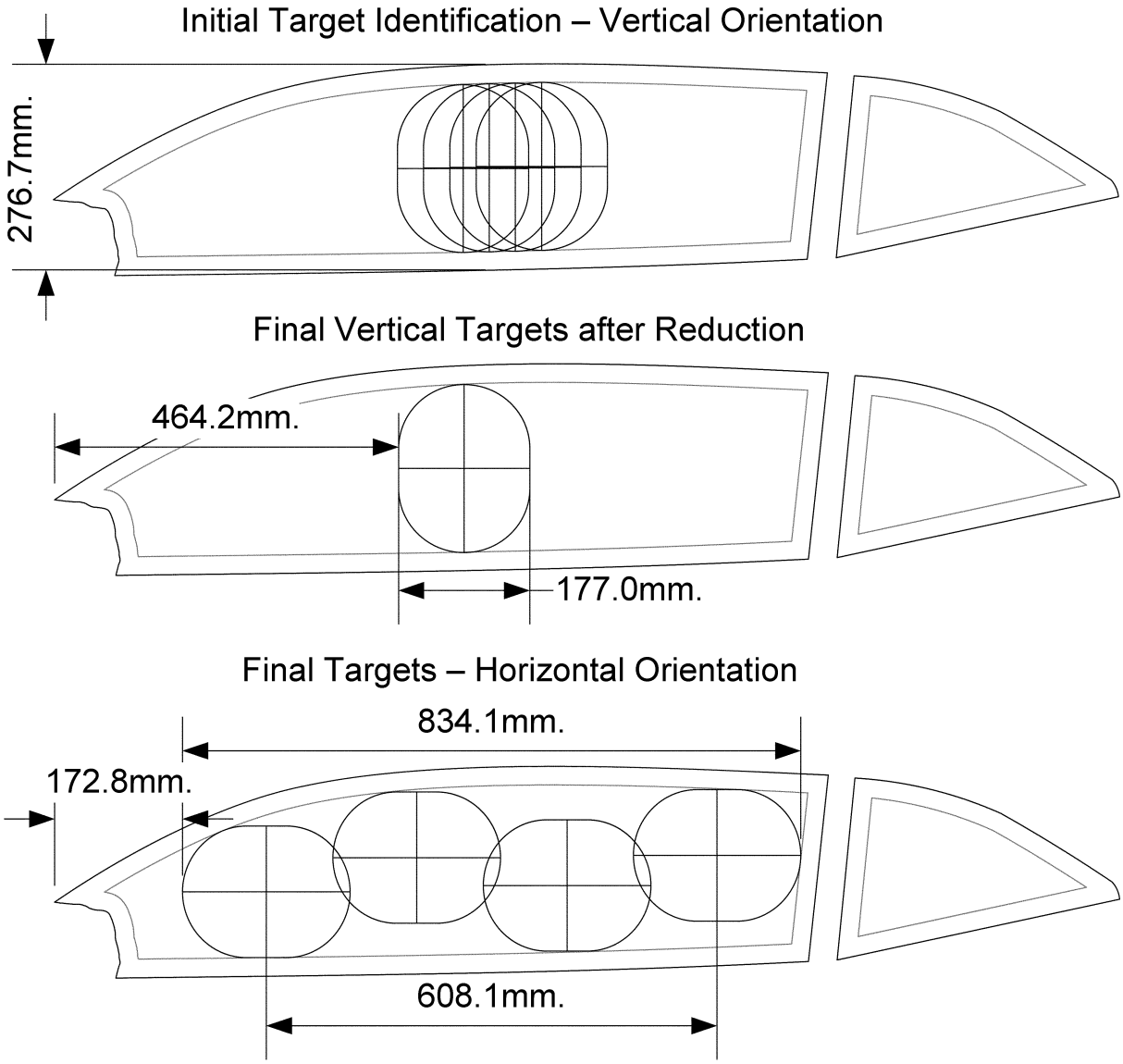

Figure 14 – Side daylight opening of a MY2010 Chevrolet Camaro - Showing initial and final vertical targets and final horizontal targets.

It appears that, if the target outline were to be kept only vertical, there would be an artifact in the test that could result in the exclusion of entire or large parts of some window openings from being tested, while not excluding a window that differed only by a few millimeters in dimension. For a long narrow window, the number of targets can jump from zero to four with an increase in vertical dimension of the window opening of only about 15 mm. If a long, narrow window had a vertical dimension of 277 mm, the NPRM procedure would result in no targets on the window opening. If the window vertical dimension were increased by only 5 percent, from 277 mm to 290 mm, under the NPRM procedure the targets would go from zero to four.

Figure 15 shows the result of the NPRM's targeting process with the vertical dimension of the daylight opening increased by 3 percent (from 277 mm to 285 mm). The four initial vertical target locations are shown in the top graphic. The target elimination process results in the two middle targets being removed but under the target reconstitution process a target is reconstituted between them; the final number of vertical targets is three, as shown in the middle graphic of the figure. The forward edge of the most forward target is 348 mm from the forward edge of the daylight opening, which is a substantial area. If we perform the targeting procedure with a horizontally oriented target outline, the four targets shown in the bottom graphic of Figure 15 result. The forward edge of the most forward target is 159 mm from the forward edge of the daylight opening.

BILLING CODE 4910–59–P

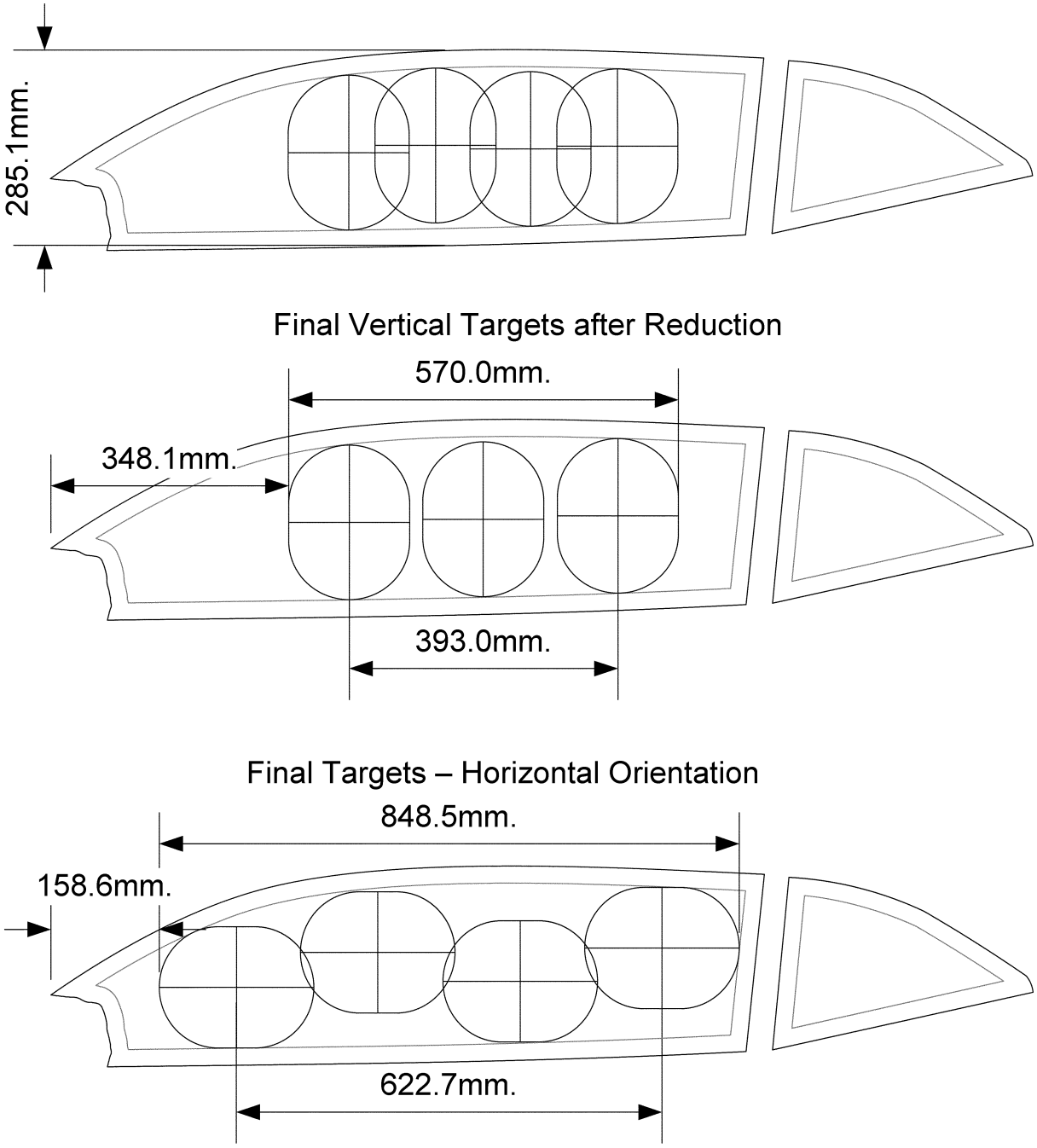

Figure 15 – Side daylight opening of a MY 2010 Chevrolet Camaro (approximate dimensions), with the height of the window increased by 3% - Showing initial and final vertical targets and final horizontal targets.

Figure 16 compares the horizontal coverage (dimension from leading edge of most forward target to the trailing edge of the most rearward target) of the daylight opening using the vertical and horizontal target outlines. The vertical targets show a great deal of sensitivity to the height of the daylight opening as opposed to the horizontal targets, which are very insensitive to opening height.

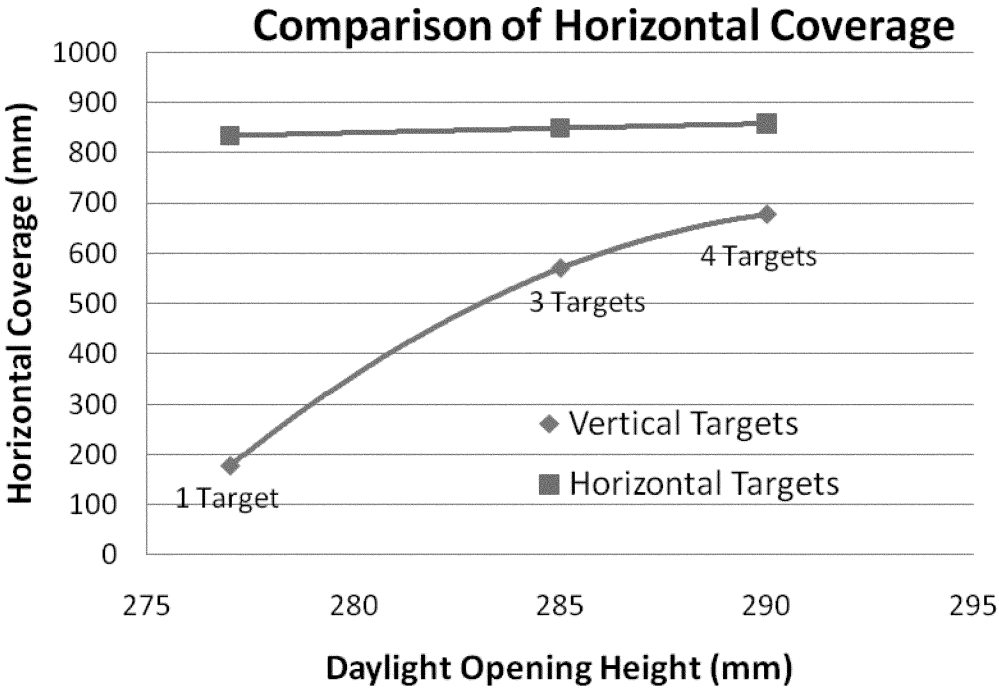

Figure 16

The second issue we explored involved the pluses and minuses of systematically rotating the target outline in small increments in order to fit a single target in a window opening that would otherwise not accommodate a target. Figure 17 depicts a daylight opening that is too small to fit a vertically oriented target outline within the offset line. Under the NPRM targeting procedure, such a daylight opening would not be impacted. However, rotating the target in increments of 5 degrees, from the initial vertical orientation, we find that the target outline will fit at an angle of 45 degrees.

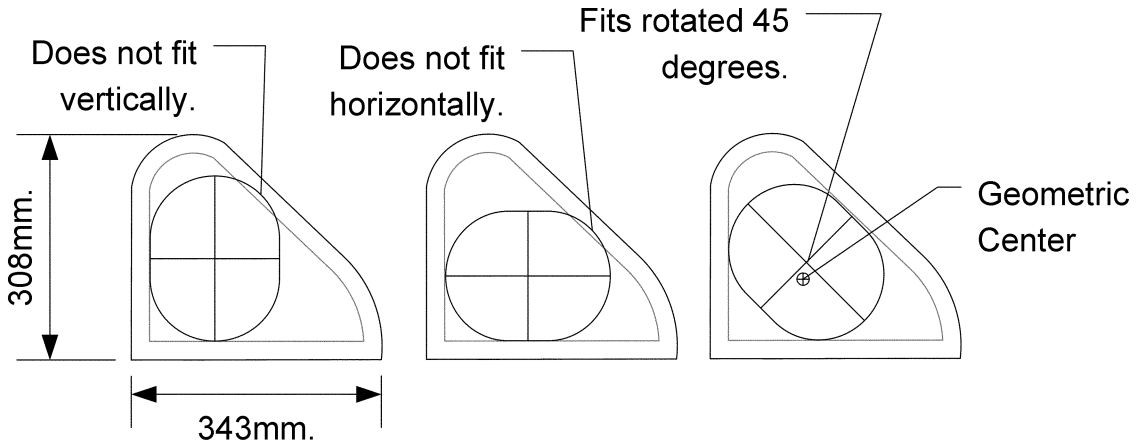

Figure 17 – Daylight opening shape where target outline only fits at some oblique orientation.

We disagree with the Hyundai comment that suggested that, if there are no vertically oriented targets that can fit in a window under the NPRM procedure, it is unlikely to be a portal for ejection. We have no data that supports the view that occupants maintain a vertical orientation when ejected through a window in a rollover. Given the chaotic nature of rollovers, we do not expect this to be the case. We know of no convincing reason why the target should not be rotated at the window opening, given that a simple and small rotation will enable us to test a countermeasure in a satisfactory manner and ensure that the ejection mitigation device fully covers the window opening.

If we specified that the targets may be reoriented (rotated) in a systematic manner, we could eliminate an artifact in the proposed procedure. In the section above, we saw that for a long

narrow window, the number of targets can jump from zero to four with an increase in vertical dimension of the window opening of about 15 mm. This is not desirable that a daylight opening would go from zero to 4 targets when the vertical dimension of the opening is above or below 276.1 mm. These artifacts of the combination of the window opening geometry and the orientation of the impactor under the NPRM are unacceptable, given that the standard would not assess the ability of the countermeasure installed at the window opening to prevent partial or complete ejections.

Contrary to the Alliance comments that rotating the headform is an "[a]bitrary deviation" of the test procedure, the agency believes that, for certain situations, to leave the headform in the vertical orientation would result in arbitrary results, not consistent with the need for daylight opening coverage. Similarly, we disagree with the TRW comment that implied that target reorientation needlessly complicates the test procedure. Rotating the target outlines would add little if any complexity to the standard. To the extent the procedure is more complicated, the need is justified.

Accordingly, the agency has decided that this final rule will allow the reorientation of the targets and the associated reorientation of the impactor headform, under specific conditions. The conditions are discussed below.

From the examples shown in the technical analysis above, any situation where fewer than four vertical targets can be placed in the daylight opening would allow for unacceptably large gaps in coverage. As shown in Figure 15, *supra,* the 3 vertically-oriented targets had 279 mm less horizontal window coverage than did the 4 horizontally oriented targets and the forwardmost horizontal target was 189 mm more forward than the vertical target.

Yet, the agency has chosen not to change the orientation of the impactor from vertical to horizontal when the same number of targets can be placed in the daylight opening in either orientation. This is so even though in some cases, it is possible that the horizontal targets provide more horizontal coverage of the window opening. There are several reasons for this decision.

First, regardless of target orientation, if the same number of targets can be placed within the window opening then the area being impacted in both cases would be essentially the same. For example, looking at Figure 18 below, the target outlines impact approximately the same amount of area in the window opening. What differs is the distribution of the targets within the opening, which is solely a function of the opening shape. The horizontal targets cover more of the window opening towards the bottom of the A-pillar and the vertical targets more fully cover more of the remaining areas of the window.

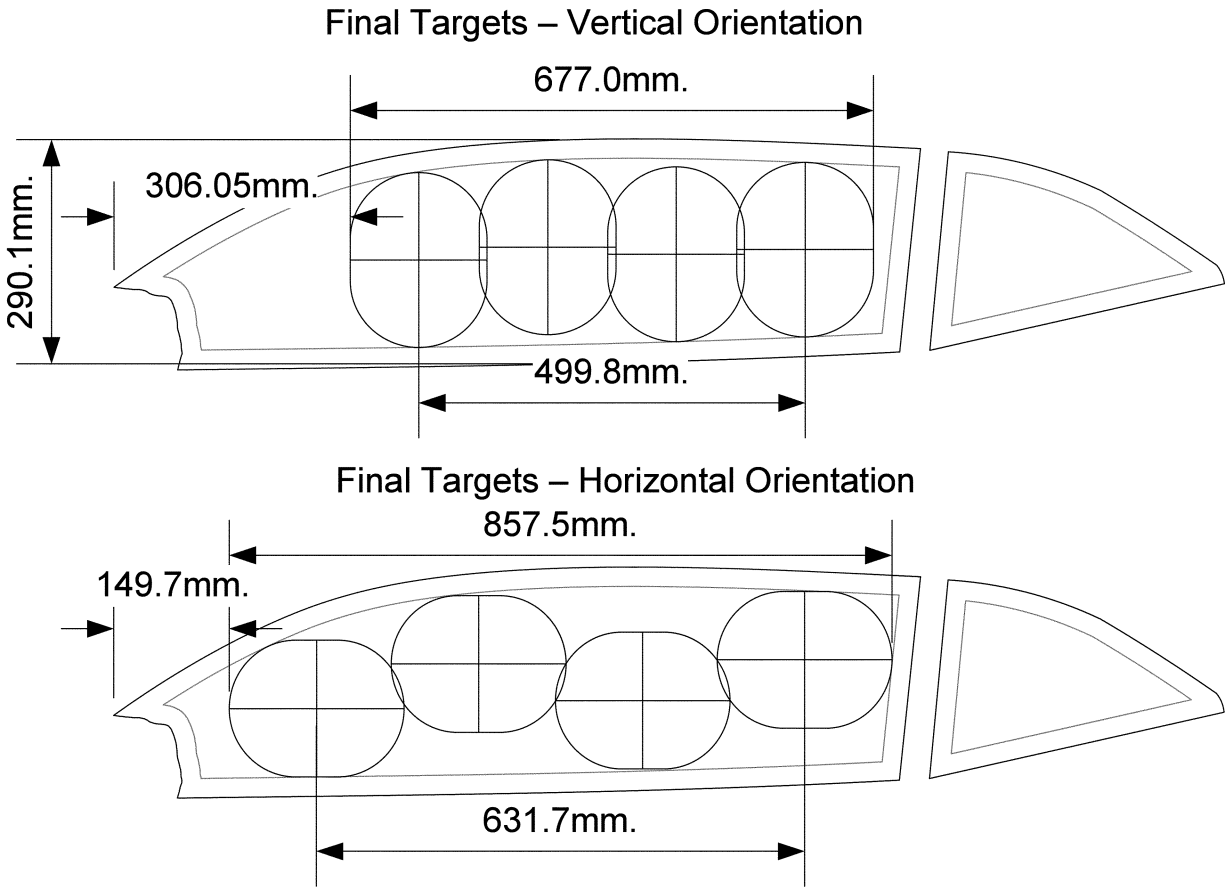

Figure 18 - Side daylight opening of a MY2010 Chevrolet Camaro, with the height of the window increased by 5% - Showing final vertical and horizontal targets.

Second, the bulk of our test data to date and the test data submitted by comments are with the impactor in the vertical orientation. This includes data that indicates that the proposed requirements are practicable. Without more test data with a horizontal orientation, we are reluctant to change the impactor orientation for all window openings. Notwithstanding that most of our testing was done with the impactor in the vertical orientation, when the number of targets is fewer because the target is oriented vertically, we believe that the importance of fuller window opening coverage outweighs all other considerations.

Third, there are window openings that would otherwise not accommodate a target unless the target outline is rotated to some oblique angle. See Figure 17. We find it objectionable not to specify that the impactor may be rotated.

We find no reasonable argument that would compel us not to allow rotation of the impactor beyond the vertical or horizontal configurations given that this might result in such a window not being covered by any countermeasure. To say that an occupant's head or some other body part cannot reorient itself during the rollover event, including the head or body part of a belted occupant, is not logical.

The conditions for the rotation of the targets and impactor headform by 90 degrees to a horizontal orientation are specified in the final rule regulatory text at S5.2.5.2 and S5.6.2, respectively. The conditions for the incremental 5 degree rotation of the targets and impactor headform are specified in final rule regulatory text S5.2.5.3 and S5.6.3, respectively. The 5 degree increment reorientation is about the y axis of the target and achieved by rotating the target's positive z axis toward the vehicle's positive x axis.[131] At each increment of rotation, an attempt is made to fit the target within the offset line of the side daylight opening. At the first increment of rotation where the target will fit, the target is placed such that its center is as close as possible to the geometric center of the side daylight opening.

iv. Suppose Even by Rotating the Headform the Vehicle Has No Target Locations

AIAM and VSC requested that the regulatory text expressly state that vehicles without any target locations are excluded from the standard. Hyundai suggested that any window not having targets according to the proposed requirement should be excluded.

Agency Response

We have added text to S4.2 of the standard to state that if a side daylight opening contains no target locations, the impact test is not performed on that opening.

The vehicle is not excluded from FMVSS No. 226, however. There are a number of requirements in section S4.2 of the standard that apply to vehicles that have an ejection mitigation countermeasure that deploys in the event of a rollover. Paragraph S4.2.2 requires the vehicles to have a monitoring system with a readiness indicator meeting certain specifications. Paragraph S4.2.3 requires the vehicle owner's manual to have written information about the ejection mitigation system and the readiness indicator. Paragraph S4.2.4 requires the manufacturer of the vehicle to make available to the agency, upon request, certain information about the rollover sensor system. Vehicles that have an ejection mitigation countermeasure that deploys in the event of a rollover are subject to these requirements even if side daylight openings contain no target locations. Since the vehicle is subject to FMVSS No. 226, the vehicle may be counted as a vehicle that meets the ejection mitigation requirements of the standard for phase-in and advanced credit purposes.

v. Decision Not To Test Target of Greatest Displacement

Vehicle manufacturers were supportive of a method to reduce the number of tests. However, not all supported the alternative presented in the NPRM to test at the 24 km/h impact speed at only the target location with the greatest displacement during the 16 km/h impact. Hyundai stated that "no significant additional information would be gained by testing all of the lesser displacement locations." The Alliance alternatively suggested a single impact speed and time delay for all target locations (16 km/h with a 3.4 second delay). The Alliance opined that "[d]eployment of side curtain airbags is highly dependent on placement of garnish trim and performance of attachments in the vehicle body. If a subsequent test needs to be performed [on] one side of a vehicle after an airbag is deployed, a new airbag and new garnish trim will have to be installed."[132] They mentioned that this reinstallation may not be representative of factory installation. In addition, it alleges that attachment points may wear or deform after multiple tests.

AIAM stated that "[t]here would be no reduction in test burden unless the agency were to require manufacturers to identify which impact location had the largest displacement in their low speed certification testing, so that the agency could perform its high speed test at the same location. Otherwise, the manufacturer could be required to conduct high speed tests at all impactor locations, to assure that it has test data for the same location that the agency tests."

Air bag suppliers were mixed in their responses on this topic. TRW recommended "keeping all four impact tests at both impact speeds. This is because NHTSA testing could identify a different 'worst point' than is identified by the OEM in their tests. Therefore, vehicle manufacturers would likely need to test more extensively than NHTSA. Thus while the compliance testing burden may be slightly lowered, testing at the manufacturer [sic] will probably not be diminished significantly." Takata suggested the alternative of testing all target locations at the 24 km/h-1.5 second test, then performing the 16 km/h-6 second test only at the location experiencing the greatest displacement in the first series. Takata believed that "it is important to test all the locations at the high energy level to ensure structural integrity of the countermeasure device. This approach identifies a robust design and also reduces the number of tests."

Agency Response

After considering the comments, we have determined that the final rule will require that all target locations be impacted at the higher and lower impact velocities rather than just impacting one target location at the higher speed test. This adopts the regulatory text option presented in proposed S5.5(2A) (except, as discussed earlier in this preamble, the higher speed will be 20 km/h rather than 24 km/h).

We found the comments from AIAM, TRW, and Takata to be informative and persuasive. We agree with AIAM and TRW that there is unlikely to be a significant reduction of test burden to the industry by only requiring a 1.5 second-high speed test at the location that yields the greatest displacement at the 6 second-low speed test. This is because our ejection mitigation side air curtain test data indicates that there is typically no clear distinction between the displacements of several of the target points in a vehicle window

[131] Looking at the left side of the vehicle from the outside, the rotation is counterclockwise and looking at the right side of the vehicle, the rotation is clockwise.

[132] NHTSA–2009–0183–0029, p. 30.

opening. There sometimes is no clear distinction that a certain target is the "weakest," showing the most displacement in the 16 km/h-6 second test. Agency testing of production vehicles set forth earlier in this preamble indicates that the weakest target location is not obvious across data from the 24 km/h-1.5 second test, 20 km/h-1.5 second test, or the 16 km/h-6 second test. Based on limited data from our new impactor, we found that there is less difference in displacement between the 20 km/h-1.5 second and 16 km/h-6 second tests. (See rank of the displacement by target location for the second row testing of the MY 2008 Highlander, Tables 10–18, *supra.*) Thus, vehicle manufacturers might not be assured from their data which target location will be the weakest in a NHTSA test. Accordingly, they may end up testing all of the targets to all of the impact speeds.

We also agree with Takata's comments that all target locations must be tested at the higher impact speed to assure that the testing determines the robustness of the designs. However, not only must the robustness of design be assessed at the top impact speed of 20 km/h, performance at 6 seconds must also be determined. The agency can only assure this by impacting all locations at 16 km/h with a 6 second delay.

AORC suggested that the standard could specify that manufacturers will pronounce to us which target point should be tested at the higher speed. We do not agree with the logic of binding the agency to only impact target locations deemed by the manufacturer to have the greatest displacement in the 16 km/h test. Such an approach would be an unacceptable limitation of the agency's ability to independently determine how to test a vehicle.

We also did not find compelling the comments expressed by the Alliance. We have already discussed and rejected the commenter's suggestion that FMVSS No. 226 should have only a single impact speed and time delay for all target locations (16 km/h with a 3.4 second delay).

With regard to the commenter's suggestion that there should be only one 16 km/h test due to wear and tear on and effect of trim components on testing, we decline this suggestion also. There was no showing that issues related to trim components justify reducing the tests to a single impact speed. Moreover, the Alliance's concerns about trim components appear inconsistent with Nissan's comment. Nissan indicated that it would like the final rule to allow testing on an untrimmed "cut body" and that the headliner would not be expected to affect performance of the side curtain air bag system. This indicates to us the possibility that trim components generally might not have a significant effect on curtain performance. The Alliance's comments about trim components are not substantiated and do not justify reducing the number of tests to one.

This final rule does reduce a test burden on manufacturers of vehicles that use only non-movable (fixed) glazing as the ejection mitigation countermeasure to meet FMVSS No. 226, without use of a deployable ejection mitigation countermeasure. We have written the standard to apply only the 20 km/h-1.5 second test to the daylight opening with the non-movable glazing, and not the 16 km/h-6 second test. If the displacement limit can be met at the window opening in the 20 km/h-1.5 second test, we will not subject the window opening to the 16 km/h-6 second test. This is because the 20 km/h test would be redundant. If the displacement limit is met in the high speed test, we believe the limit will be met in the low speed test.

vi. Reconstitution of Targets

The Alliance disagreed with the proposed method to add back a target (reconstitution). It believed that "[t]he combination of FMVSS 214 and FMVSS 226 requirements renders testing at any point and 'target reconstitution' unnecessary and redundant to provide enhanced side curtain coverage."

Agency Response

We disagree with the Alliance's position that target reconstitution is unnecessary and redundant. A large space between two impact locations in a daylight opening is not consistent with our desire for full window coverage. Reconstituting (adding back) a target back between two distantly-spaced targets helps to meet our goal. We note that both the Ford and GM internal ejection test procedures have an impact location at the geometric center of the window. For many window shapes assessed under the procedures of this final rule, the target at the center of the window would be close to the location that would be covered by the middle target reconstituted. Thus, the Ford and GM procedures appear to recognize the merits of testing for full window coverage.

f. Glazing Issues

The NPRM proposed to allow movable windows made from advanced glazing to be in position (up and closed) for the compliance test, but pre-broken by a specified test procedure to simulate the breakage of glazing during a rollover. Tempered (non-advanced) glazing shatters when broken, so for tempered glazing, we proposed that we would conduct the glazing breaking procedure and shatter the glazing, remove the glazing, or retract the glazing, at the manufacturer's option.

1. Positioning the Glazing

The NPRM discussed the pros and cons of advanced glazing for ejection mitigation. Advanced glazing may enhance the performance of current air bag curtain designs. Vehicles tested by NHTSA showed an average displacement reduction across target locations and test types of 51 mm.[133] However, the updated target population data show that 31 percent of front seat ejections and 28 percent of all target population ejections are through windows that were partially or fully open prior to the crash. Further, the agency was concerned that in the real world, advanced glazing would not be as effective as an ejection countermeasure due to vehicle structural deformation and the effects of inertial loading of the window mass.

The NPRM requested comments on several alternatives, including the alternative of testing all movable windows removed or retracted, regardless of whether the window is laminated or tempered; fixed laminated windows would be permitted to be kept in place, but pre-broken.

Comments

Commenters were divided in their views of how Standard No. 226 should test vehicles that have advanced glazing covering a side daylight opening.

Vehicle manufacturers and air bag suppliers did not support testing with advanced glazing in place. Ford stated that "[s]ide glazing retention, regardless of construction-type (*e.g.,* laminated or tempered), in real-world rollover crashes is random and unpredictable." Ford stated that side glazing retention "is dependent on the unique characteristics of that particular crash (*e.g.,* number of quarter turns, vehicle roll rate and deceleration, objects contacted, occupant loading, vehicle deformations, etc.)." The commenter

[133] We stated in the NPRM that we believed that incorporation of advanced glazing for ejection mitigation would be relatively expensive compared to the implementation of air bags. The PRIA showed that the proposed requirements would add about $33 per light vehicle at a total cost of $568 million for the full curtain countermeasure. A partial curtain plus advanced glazing would have an incremental and total cost of $88 and $1,494 million, respectively.

referred to an SAE paper from Kramer, et al.[134] in which the authors stated "there is information from the field (FARS and other individual collisions) that document ejections through laminated side glass." Ford recommended [135] that—

> the eventual requirements of FMVSS 226 be focused on rollover activated side curtain technology, with consideration of the associated capabilities of this technology, because these devices are designed to deploy regardless of side glazing status in a rollover (*e.g.,* retained, up, down or partially open) or construction of the glazing.

Honda had a similar view, stating that "a vehicle with movable windows, being operated with a laminated glazing even partially open, could result in the window falling out of the window frame due to body deformation resulting from the crash or subsequent ground contact during a rollover event." It stated that because the pre-breaking procedure allows the window to be in the full up position it "may not fully simulate real world conditions." Honda suggested that all testing should be done with the windows "removed or retracted prior to the impact test instead of allowing pre-breaking for movable windows." For fixed laminated windows, the commenter said that "the concerns mentioned above would not apply and pre-breaking would be a suitable method of simulating real world conditions * * *."

AORC and TRW expressed concerns about testing glazing with the window up. They suggested that the agency could test without any glazing present, but either increase the amount of allowable excursion, or reduce the energy level (*i.e.* reduce the impactor velocity) for impact locations which have advanced glazing, to reflect the enhanced performance expected if the advanced glazing were present.

In contrast, glazing suppliers stated that all testing should be performed with the advanced glazing in place because they believed that the NPRM provided strong support of advanced glazing in reducing impactor displacement.

Consumer groups overall supported the use of advanced glazing. IIHS described roof crush and side impact testing it did on several vehicles with front row laminated glazing. IIHS stated that all the laminated glazing remained intact within the window frame. IIHS suggested NHTSA provide an incentive to vehicle manufacturers to use advanced glazing, such as by testing all vehicles without the glazing in place but allow a higher displacement for vehicles equipped with laminated glazing. In contrast, Advocates suggested NHTSA should test with both air curtains and advanced glazing and require a much reduced displacement limit. Public Citizen wanted the final rule to specifically disallow the use of advanced glazing on a vehicle unless it was in combination with side curtain air bags. Public Citizen stated there is a lack of evidence that laminated glazing will perform well enough on its own.

Agency Response

This final rule does not allow the use of movable glazing as the sole means of meeting the displacement limit of the standard (*i.e.,* movable glazing is not permitted to be used without a side curtain air bag). It also specifies that if a vehicle has movable advanced glazing, the 16 km/h-6 second test will be performed with the glazing retracted or removed from the daylight opening. Our decision is based on the following factors.

First, field data already evidence an incongruity between the glazing countermeasure and the foreseeable use of it by the public. The updated target population data show that 31 percent of front seat ejections and 28 percent of all target population ejections are through windows that were partially or fully open prior to the crash. We have no small concerns about a countermeasure that can be easily, totally and most likely unknowingly counteracted by motorists by the simple and everyday act of opening a window. As crash data show, many in the target population already operate their vehicles in a manner that negates the efficacy of the countermeasure. Any benefits accruing from advanced glazing will not be achieved if the window were partially or fully down.

Second, in contrast to IIHS's roof crush and side impact laboratory test findings, the field data of real-world performance of advanced glazing are showing that even when movable advanced glazing is initially up, such glazing may not be present as an effective countermeasure beyond the initial phase of a rollover. Rollovers are one of the most severe and unpredictable vehicle crash events. Based on an analysis of field data and the comments on the NPRM, we are not confident at this time that movable advanced glazing used alone, without an ejection mitigation side air curtain to supplement it, will be a viable countermeasure throughout a rollover crash. The following illustrates some real world examples of the un-predictable nature of advanced glazing in rollovers.

In NASS CDS case 2001–43–190, a MY 2000 Audi A8 experienced a left leading, four quarter-turn rollover.[136] This vehicle did not have side curtain air bags. The unbelted driver was completely ejected through the sunroof. The belted front passenger was not ejected. The technical report accompanying this final rule shows the interior views of the passenger and driver sides of the vehicle, respectively. The passenger side laminated glazing has completely detached from the first and second row windows. However, the first and second row driver side windows are in place. The first row driver side window was coded as being partially open prior the crash. It remained so after the crash, although it was extensively damaged. The second row driver side window was in place and undamaged.

In SCI case CA09063 (RODSS 7242), a MY 2003 Lincoln Aviator with laminated glass in the driver's side window sustained a head-on collision followed by a three quarter-turn rollover. This vehicle had rollover deployable curtain air bags, but they did not deploy. The driver and right front passenger were belted. There were no ejections. Both laminated driver and front row passenger windows detached from the window opening.

In SCI Case CA10006 (RODSS 8289), a MY 2003 Lincoln Aviator experienced an eight quarter-turn rollover. This vehicle had rollover deployable curtain air bags, which deployed. The driver and right front passenger were belted. The belted driver was killed due to partial ejection of her head. Both laminated driver and front row passenger windows vacated the window opening. The passenger side window glazing is shown in the foreground of a photograph of the scene, completely detached from the vehicle.

In these examples, it is not possible from the visual evidence to determine when in the rollover event the advanced glazing detached from the window opening, nor the cause(s) of the separation. In all except one of the cases there was a belted occupant adjacent to the window that detached from its opening. In these cases, occupant interaction may have been a factor. The rear passenger side window of the Audi did not have an adjacent occupant, so

[134] Kramer *et al.* "A Comparative Study of Automotive Side Window Occupant Containment Characteristics for Tempered and Laminated Glass," SAE Paper 2006–01–1492.

[135] NHTSA–2009–0183–0020, p. 4.

[136] Although the NASS coding indicates that the first 2 rows of side windows were tempered glass, we determined this to be incorrect from the photographic evidence.

occupant contact was not likely the cause of the window vacating the opening. Other potential causes are structural deformation and inertial forces due to impact or vehicle rotation.

We found compelling the Ford and Honda comments discussing the potential for advanced glazing to detach from the window opening in real-world rollovers. We agree with Ford that the retention of advanced glazing, particularly movable glazing, can be a function of the random and unpredictable nature of rollovers. We also believe there is merit to the Honda contentions that movable advanced glazing could vacate the window frame due to vehicle body deformation resulting from crash dynamics or ground contact, even when the window is partially up, and that the pre-breaking procedure performed in a full-up position may not fully simulate these conditions. We found their comments to be consistent with the information presented above, which shows examples of field performance of advanced glazing (specifically laminated glazing) in several rollover and combination crashes (rollover in combination with planar impacts). Particularly interesting is the Audi A8 rollover, where the glazing on one side of the vehicle vacated, but the windows on the other side did not.

Ejection is a major cause of death and injury in rollover crashes. As stated in our discussion of the safety need for this rulemaking, according to 2000–2009 FARS data, about half of the occupants killed in rollovers were completely ejected from their vehicle. A double-pair comparison from the last ten years of FARS data show that avoiding complete ejection is associated with a 64 percent decrease in the risk of death. The ejection countermeasures that should be installed in response to this final rule are those which have been shown to perform well in keeping occupants in the vehicle in rollover crashes. We are unable, at this time, to assert our confidence in the ability of advanced glazing to retain occupants throughout a multiple quarter-turn rollover when used alone in movable window applications.

We have learned from the comments about ways to improve FMVSS No. 226's ability to distinguish between countermeasures. We saw that the test procedure should be enhanced to ensure that the vehicle will provide ejection mitigation protection throughout a multiple quarter-turn real-world rollover. The proposed impactor test of ejection countermeasures is appropriate and worthwhile, but we have learned that to better replicate real-world conditions, it is imperative to remove any kind of glazing on a movable window when preparing for the 16 km/h-6 second test. Since there is a reasonable possibility that the movable window glazing will vacate the vehicle in the later stages of the crash, by removing the glazing in the test we better replicate the real-world condition. Removing such glazing, and expressly stating in the standard that vehicles are not allowed to use movable glazing as the sole means of complying with the standard, assure that movable advanced glazing will be used with an ejection mitigation side curtain air bag or other deployable safety system. These provisions assure that the movable glazing will have to be supplemented by a side curtain air bag or other countermeasure, thus assuring a minimal level of safety in the event the window is partially or fully rolled down or vacates the window opening due to the dynamics of the crash.

It is possible that there could be modifications to the designs of the window frame that may improve the ability of movable advanced glazing to remain within the window opening during a rollover.[137] However, the agency currently does not have the information to make this determination. We assume that this is what the AORC meant when it stated that a single integrity test for laminated glazing could be established to verify retention. Unfortunately, we did not learn of these potential test parameters from the comments.

Some glazing manufacturers indicated that the problem of the open window could be mitigated by newer vehicle safety technology that rolls windows up prior to a crash. It is our understanding that at least some of these systems are initiated when the ESC is activated.[138] ESC would activate in only a portion of the rollover events that make up our target population, *i.e.*, most likely single vehicle rollover crashes. The remainder would not be covered. Moreover, the effectiveness, cost and practicability of an automatic roll up system in achieving the benefits of ejection mitigation throughout a multiple quarter-turn rollover has not been demonstrated.

Accordingly, for the 16 km/h-6 second test, if a vehicle has movable advanced glazing as all or part of the ejection countermeasure, the test will be performed with the glazing retracted or removed from the daylight opening. Based on the 28 percent of the target population ejected through windows open prior to the crash and uncertainties about the field performance of the current movable advanced glazing, we cannot agree to the request that all impact testing be performed with the movable advanced glazing in place.

If the advanced glazing is fixed in place, we will not remove it in the 16 km/h-6 second test. It is reasonable to assume that glazing permanently fixed in the up position will be up when the vehicle is on the road. We will pre-break the fixed glazing, to replicate the state of the glazing during the stages of a rollover event, but we will not remove it. Likewise, if the glazing is fixed, we will pre-break it but will not remove it in the 20 km/h-1.5 second test. Thus, it remains technically possible under the standard to have fixed advanced glazing as the standalone countermeasure. This provides an incentive to manufacturers to use advanced glazing.

Movable advanced glazing will not be removed in the 20 km/h-1.5 second test. This test will be performed with the advanced glazing in place, but the glazing will be pre-broken to replicate the state of the glazing at the outset of a rollover event. Although advanced glazing could vacate the opening late in the crash event after many quarter-turns, we have more confidence that advanced glazing will not be dislodged early in the rollover event represented by the 20 km/h-1.5 second test. This is because vehicle structural deformation and inertial effects resulting from ground contacts contributing to glazing being dislodge will be cumulative, *i.e.,* increase as the rollover event continues.

IIHS's tests also showed that the advanced glazing on some of the vehicles it tested remained within the frame in roof crush and side impact testing. Allowing movable advanced glazing to be in position in the high speed (20 km/h-1.5 second) test will provide an incentive to vehicle manufacturers to use advanced glazing to meet the standard's requirements or enhance ejection mitigation performance of side curtains.

We decline the suggestions to provide an incentive for advanced glazing by increasing or decreasing the allowable displacement of 100 mm. TRW and AORC suggested increasing the allowed

[137] The agency researched such window frame modifications during the research into advanced glazing as a standalone ejection mitigation countermeasure. "Ejection Mitigation Using Advanced Glazings: A Status Report," November 1995, DOT DMS NHTSA–1996–1782–3, pp. 4–7 to 4–10. Results indicated that adequate retention was maintained in the area of encapsulation, but that the unsupported (nonencapsulated) top edge was subject to large deflections. (pg. 7–29).

[138] Mercedes offers this feature and calls it Pre-Safe.

displacement, or decreasing the impact speed, at places on the window opening that had advanced glazing. We cannot agree to lessen the severity of the test for advanced glazing as this would reduce the protection of the motorists, particularly those who may have the window partially or fully rolled down. Advocates suggested decreasing the displacement limit below 100 mm for combined advanced glazing plus curtain air bag. As explained earlier in this preamble, the 100 mm limit strikes the appropriate balance between stringency and practicability.

Advocates also stated that vehicle structural deformation will reduce the effectiveness of the curtain air bags and advanced glazing will increase roof strength.[139] It presented no data to substantiate these claims. NHTSA is not aware of a technical or engineering basis for the view that side curtain air bag performance will be reduced by structural deformation.

Our concerns about the performance of advanced glazing also extend to the deformation of the window opening. Because of its mass, advanced glazing will be much more susceptible to inertial loading from vehicle rotation and vehicle ground contact than will curtain air bags. That was the point of our statement in the NPRM (74 FR at 63213) about advanced glazing having greater mass compared to an air bag curtain. In response to comments from some glazing suppliers, we did not mean to imply that laminates had a weight penalty when compared to tempered glazing.

2. Window Pre-Breaking Specification and Method

We have determined that there is a safety need to have a glazing breaking procedure applied to both the interior and exterior sides of the glazing. We are slightly modifying the proposed procedure, to adopt use of a 75 mm offset pattern to reduce the glazing preparation time.

NPRM

In the NPRM, we proposed specifications and a method that called for punching holes in the glazing in a 50 mm horizontal and vertical matrix ("50 mm matrix") on both sides of the glazing. A spring-loaded automatic center punch was to be used to make the holes. The punch has approximately a 5 mm diameter before coming to a point. The spring on the punch was adjusted such that 150 N ±25 N of force[140] was required for activation. The details of the procedure were described in the NPRM. When punching a hole, we placed a 100 mm by 100 mm piece of plywood on the opposite side of the glazing as a reaction surface against the punch. In testing glazing that will disintegrate under the procedure (*e.g.,* tempered glazing), the vehicle manufacturer could opt to remove or completely retract the tempered glazing and thereby bypass the window breaking process.

We also noted that we would be continuing research into window pre-breaking methods, specifically, a variation of the 50 mm matrix hole punch method where the holes on either side of the glass are offset by 25 mm. Initial indications at the time of the NPRM were that this variation exhibits the potentially positive attribute of lessening the chances of penetrating the inner membrane between the glass layers. 74 FR at 63215.

Comments

The Alliance said that use of different punches and punch settings can produce differing amounts of penetration and potential damage to the plastic laminate. The commenter also believed that the tolerance for the punch activation force is too large (17% of nominal value), and that the "rigid" backing material needs to be specified, as does the pressure/force applied to the backing material. The AORC supported offsetting the breaking pattern by 25 millimeters from the inside to the outside of the window, to reduce the potential that a punch impacting the same point from both sides of the window would produce a hole through the laminate. Guardian, EPGAA and Solutia believed that the 50 mm pre-breakage procedure was excessive and not consistent with real-world conditions, particularly breakage of the interior side of the glazing. Guardian commented that at a minimum the pre-breaking procedure be altered to offset the punch locations on either side of the glazing. Exatec asked about the suitability of the procedure for non-glass advanced glazing material.

Agency Response

We disagree with the comments from the vehicle manufacturers and air bag suppliers that the proposed pre-breaking procedure was too time consuming, onerous, or impractical. Nonetheless, the procedure we adopt today calls for less than half the number of punched holes, reducing the glazing preparation time.

We have performed well over 100 tests with advanced laminated glazing using various methods of pre-breaking. About 30 of these tests have been performed using a 50 mm matrix. We estimate that it takes our laboratory technicians about 30 minutes to mark the 50 mm grid pattern and punch all the holes for a relatively large front row side window. The time it takes to mark the holes per glazing pane can be significantly shortened by laying an unmarked pane on top of an already marked pane. If a subsequent test is to be performed (as might be the case during research and development) and the door trim is installed, it takes approximately 20 to 60 minutes to replace the glazing. Often this is done in parallel with preparations for other aspects of the test, so the overall test time is not affected appreciably. This procedure is not difficult or onerous to conduct.[141]

Nor is the procedure gratuitous. To the contrary, the pre-breakage procedure is crucial to ensuring that advanced glazing will perform as intended in the field. Advanced glazing is weakened when pre-broken; the more breakage of the glazing, generally the more displacement of the impactor. See Table 23 of the NPRM, 74 FR at 63215. The pre-breakage procedure is intended to condition the glazing to mimic the degree of breakage that is occurring in the field. Crash information and the results of impact testing corroborate the necessity of the proposed procedure.

In the technical report accompanying this final rule, we have images from several rollover crashes. The first was a MY 2000 Audi A8 that underwent four quarter-turns. The second was a MY 2003 Lincoln Aviator that was exposed to a frontal impact followed by a three quarter-turn rollover. The last vehicle was also a 2003 Aviator that experienced an eight quarter-turn rollover. The technical report also shows a close-up of the driver side window laminated glazing of the Aviator that rolled eight quarter-turns. In all of the cases, the crash scene photographs show the degree to which both sides of the glazing have been disintegrated, especially for those laminates that have vacated the window

[139] The relevance of the Advocates comment about advanced glazing increasing roof strength is not clear to us. In the May 12, 2009, FMVSS No. 216 final rule, the agency stated that we had investigated the contribution of tempered side windows to roof strength and found that it had limited effect (74 FR 22371). We have no reason to believe that there would not be similar results from advanced laminates.

[140] This force level worked well for the samples of advanced glazing tested by the agency.

[141] When testing with tempered glass, if the glass pane does not move completely out of the window opening into the door, it must be removed by opening the door trim. This glass pane removal takes about 20 to 60 minutes as well, due to the removal and reinstallation of door trim.

opening. This finding that advanced glazing experienced severe damage to both inside and outside surfaces and detached from the vehicle supports our belief that pre-breaking the advanced laminate should be aggressive. The technical report also has a view of the driver's advanced glazing in a 2000 Audi A8 from NASS case 2001–43–190. The glazing remained in the window. Some areas appear more highly damaged than others.

Accordingly, we are adopting the glazing breaking procedure, with slight changes that reduce the number of punched holes.

In the NPRM preamble (74 FR at 63215), we stated that that the agency was contemplating using a method for glazing pre-breaking that takes the 50 mm matrix and offsets the holes horizontally on each side of the glazing by 25 mm. Initial indications were that this variation exhibits the potentially positive attribute of lessening the chances of penetrating the inner membrane between the glass layers. Our research since the NPRM has been focused on this and another alternative offset method. This alternative uses a 75 mm by 75 mm hole punch pattern on both sides of the glazing. However, the matrix on the inside of the glazing is offset by 37.5 mm [75 mm/2] horizontally. A 75 mm matrix pattern is used to reduce the number of breakage points from the 50 mm matrix, and as stated before, the offset reduces the chances of completely penetrating the material sandwiched between the glazing layers. The technical report provides a schematic of the 50 and 75 mm offset patterns.

Our new results are consistent with our previous results. See the technical report for this final rule. We found that the method of pre-breaking the laminated window has a discernable effect on the test results. We compared the 50 mm offset pattern to the 75 mm offset pattern. When these treatments were able to be compared statistically, there were no significant differences between the 50 and 75 mm offset hole punch pattern as it relates to impactor displacement. Moreover, given that finding and the finding that the 75 mm offset has less than half the number of punched holes, reducing the glazing preparation time, this final rule adopts the use of the 75 mm offset pattern.

In response to Exatec, the final rule will clarify that it is only necessary to attempt to make the holes in the glazing and to not actually succeed. However, we will not change the procedure to stop after the first row is attempted. We have no firm basis at this time to treat one type of advanced glazing any differently than another. It is conceivable that the punches might not break the material, but could produce stress concentrations that weaken it.

Finally, we decline all but one of the Alliance's requests because we do not believe that the procedure is not repeatable or reproducible and no information to the contrary was provided by the commenter. We believe that the tolerances and values for center punch angle, activation force and punch tip diameter are sufficient. We will specifically call out the material for the 100 mm x 100 mm reaction surface, rather than simply indicate that it should be rigid. The final rule will specify the use of plywood with a minimum thickness of 18 mm (standard ¾ inch), which is the material we used during our testing. Although we believe any sufficiently rigid material will adequately perform this function, for simplicity we will specify plywood.

g. Test Procedure Tolerances

The proposed regulatory text had tolerances on various test parameters of the proposed test procedure. For example, the proposed text specified that the target outline must be aligned within ±1 degree of the vehicle longitudinal plane when determining the proper target location. Tolerances were selected such that they would not affect the test results, yet not be so small as to be unusable. In some instances, we based tolerances on those of other FMVSSs because those tolerances have been practicable and useful. For example, the tolerance on the impactor alignment with the vehicle lateral axis was based on a similar linear impactor tolerance in S5.2.5(c) of FMVSS No. 202a, "Head Restraints." Tolerance selection was based on test experience and engineering judgment. Comments were requested on whether the tolerances assure an objective, repeatable and practical test procedure.

Comments

1. The Alliance "requested that impactor specification be updated to clarify that the long axis of the impactor headform is to maintain a vertical orientation throughout the full stroke of the impact event. This approach is recommended in an effort to maximize repeatability and reproducibility of test results." The Alliance stated that they had observed some impactors that constrain this motion and others that do not.

Agency Response

We agree with the request. The headform should not be able to freely rotate during the impact test. Both our original and new test devices have a specific mechanism to constrain them from rotation about their axis of travel. Thus, we have added a specification that the ejection impactor is inspected after the test, to make sure that it is still within the ± 1 degree tolerance required at launch.

2. TRW and AORC expressed concern about the ± 0.1 second tolerance on the impact times of 1.5 and 6 seconds. They suggested a tolerance of ± 0.05 seconds to reduce the amount of test variability due to air bag pressure changes. The AORC also would like the agency to clarify the time delay such that it would be the period of time the "unimpeded impactor would arrive at the target location."

Agency Response

We are declining these requests. To answer the questions, it is important to keep in mind that under the test procedures, the impactor is to strike the countermeasure at the specified speeds and time delays.

The target location is found by projecting the daylight opening on a vehicle vertical longitudinal plane and then projecting the target onto that plane. There are an infinite number of parallel vertical longitudinal planes, or alternatively, the vertical longitudinal plane can be thought of as having any lateral location. Assembling all the planes, each with a projection of the target, creates a three dimensional projection of the target, which crosses the vehicle laterally. Or, in other words, imagine the 2 dimensional target being translated along the transverse vehicle axis, creating a path the impactor headform should be setup to travel along.

If the countermeasure is an air bag, it is deployed, and the ejection impactor is to strike the countermeasure (air bag) at the impact target location, at the specified speed and time delay. The trigger for the time delay is the activation of the countermeasure. For a curtain air bag, that would be the time at which the deployment is activated. The speed and time of impact of the impactor are measured at contact with the countermeasure (air bag) and must both be within the specified tolerances. To make it clear that it is the countermeasure that must be contacted at the specified time intervals, we have added text to S5.5(a).

Since the agency anticipates that its tests will involve testing side curtain air bags, we need to account for the effect of the air bag on the impactor's timing. The calibration testing of our new impactor indicates that the impactor would meet the timing tolerance

reduction recommended by commenters if the target were at a static location. However, although our experience has been that curtain air bags deploy in a very consistent and repeatable manner, the fact is they are not static. Also, we determine contact time on a curtain through video analysis. All in all, because of the variables and calculations needed to establish contact time with the countermeasure, we believe it is more reasonable to maintain the ± 0.1 second impact time tolerance.

3. The AORC suggests the procedure specify that contact with the countermeasure occurs when the impactor is beyond the influence of the propulsion system.

Agency Response

We agree and have modified S5.5 of the regulatory text by adding a statement that the specified ejection impactor velocities must be achieved after propulsion has ceased.

4. Honda asked if the agency has any intention of specifying the interval between each impact test. It also stated that the impactor speed might decrease after propulsion, so it requested that "NHTSA clarify the position (by time) that the impact speed should be measured." Honda also asked how contact with the countermeasure is determined, and requested that we clearly state the speed and displacement measurement methods. Honda further requested that NHTSA provide the accuracy, sampling time, and filtering of each sensor.

Agency Response

We do not agree with the suggestion to specify an interval between multiple tests. We do not know of a reason to rest the equipment between tests. We have no reason to believe that the amount of time between tests would have any effect on the test results.

As explained above in answering TRW and AORC, the speed and time of impact are measured at contact with the countermeasure and must both be within the specified tolerances. We have made these measurements during our research testing, in several ways. As indicated above, one method we have used to determine time of contact within a resolution of about 5 ms is video analysis. Another method is to know prior to the test the approximate location of the impactor stroke where contact will occur. In either case, the velocity versus time output of the ejection impactor can then be used to determine if the contact time and velocity parameters were met.

There is no need to provide in the standard a specification for velocity and displacement measurement. There are multiple ways of measuring impactor displacement and velocity. The output of displacement-based instruments such as Linear Variable Differential Transformers (LVDTs) or string potentiometers can be used directly for displacement or differentiated to give velocity. Accelerometer output can be integrated once for velocity and twice for displacement. A light-based speed trap can be used for velocity measurement as well. The agency has used all of these methods. We believe it would be counterproductive to specify a single method in the regulatory text in that this may limit our flexibility in conducting compliance testing. We note also that we found that our new impactor loses very little speed over large ranges of stroke. If the speed is correctly set, it is not difficult to meet the ±0.5 km/h speed tolerance.

h. Impactor Test Device Characteristics

The agency proposed certain characteristics that the impactor should be calibrated to meet in order to enhance the repeatability of the test, i.e., to increase the likelihood that the headform will be delivered to the countermeasure and interact with it in a repeatable manner. One was a 20 mm limit on static deflection when the impactor is loaded by a 27 kg mass. There were two specifications to limit the amount of energy the impactor may lose due to friction. The proposal specified that the ejection impactor must not lose more than 10 and 15 percent of the 24 and 16 km/h impact velocity, respectively, in 300 mm of unobstructed dynamic travel. Second, it must not require more than an average of 570 N of force to push the impactor rearward with a 27 kg mass attached to it. Finally, we required that impactor be able to deliver the center of the headform through a theoretical cylindrical shape.

The agency stated that the research test device used to develop the proposal had not been optimized for compliance test purposes (74 FR at 63216, footnote 81.). Thus, we stated our belief that tighter tolerances on the calibration characteristics could be attained with an optimized design. *Id.* Nonetheless, the agency's impactor was found to meet the percentage velocity reduction, on an average basis.

Comments

Honda asked that the agency indicate in the regulatory text where the static deflection of the impactor headform should be measured. With respect to the targeting accuracy requirement, Honda wanted to know "if it is necessary to verify accuracy of the actual contact position after each impact test, as long as the test device satisfies the specifications." It stated that with testing of an air bag it would not seem to be possible to verify whether the targeting accuracy was achieved during the test. Also with respect to this targeting accuracy requirement, it wished to have the agency specify a calibration method.

TRW believed that the performance attributes of the impactor are adequately covered by the AORC impactor specifications, as presented at the 2009 SAE Government/Industry meeting. These specifications are provided below in Table 41, for the convenience of the reader.

TABLE 41—AORC RECOMMENDATIONS FOR IMPACTOR PERFORMANCE [142]

Variable	Maximum variance	Preliminary recommendation
Velocity	± 0.75 km/h	± 0.25 km/h.
Deflection	>> 25 mm	< 10 mm.
Time Delay to Impact	400 ms	< 100 mm (or redefine time to contact).
Excursion Accuracy	± 4.6 mm	± 2 mm.
Dynamic Friction	2.62	< 0.25.
Design Margin	− 20% (TYP)	TBD.

[142] Stein, Doug, "Linear Impactor Performance Characteristics for Ejection Mitigation Testing," SAE Government/Industry Meeting, February 6, 2009, Washington DC. *File Impactor_Charaterization.ppt,* available at *http://www.aorc.org/coep.asp.*

The AORC commented that NHTSA should adopt similar specifications for impactor performance as used by the agency in their solicitation for a new impactor (Solicitation Number DTNH22–09–Q–00071).

The highlights of that solicitation are provided in the bullets below. An asterisk notes that the solicitation requirement matches the AORC recommendation.

- The ejection mitigation impactor must be capable of measuring the displacement of the moving impactor mechanism throughout the entire stroke, with an accuracy of ±2 mm.*
- The maximum radial deflection of the ejection mitigation impactor must not exceed 10 mm.*
- When the ejection mitigation impactor assembly is used in conjunction with the support frame, it must have a vertical radial deflection of no more than 15 mm.
- The maximum dynamic coefficient of friction of the ejection mitigation impactor must not exceed 0.25.*
- The moving impactor mechanism must be designed for use at peak velocities between 15 km/h and 25 km/h, with a tolerance within the range of ±0.25 km/h; a range of ±0.15 km/h or less is preferred.*
- When used with an appropriate propulsion system, the time from the signal to deploy the air curtain to the peak velocity of the moving impactor mechanism (minus any pre-programmed delay time) must not exceed 100 milliseconds for any velocity within the range of 15 km/h to 25 km/h. These velocities must also be achieved prior to the impactor making contact with deployed air curtains of current production.*
- When the headform is fired at 24 km/h, point P must remain within cylinder C from the position at which the moving impactor mechanism achieves peak velocity to the position 100 millimeters beyond the position of peak velocity. Point P is the geometric center of the headform on the outer surface of the headform, and cylinder C is a 20-millimeter diameter cylinder, centered on point P and parallel to the headform's direction of motion.

Agency Response

Many provisions of the impactor test device calibration have been modified to make them consistent with some of the calibration procedures suggested by AORC and others. The static deflection provision has been changed from 20 mm under a 27 kg load, to 20 mm under a 981 N force applied in four orthogonal directions, with the device in a test-ready configuration. The final rule will require a limit on the dynamic coefficient of 0.25, measured in four orientations with the shaft loaded with a 100 kg mass. We believe this provision will fulfill the requirement previously specified by the unobstructed velocity test and obstructed push force tests.

In response to Honda, we have added text to S7.2 in the final rule to indicate that the movement of the ejection impactor targeting point in the x–z plane (vehicle vertical-longitudinal plane) should be measured. In other words, looking along the y axis (direction of travel), the center of the headform face should not deflect more than the specified value. We have also added additional detail to this section to indicate that this static deflection test is to be performed with the impactor attached to the propulsion mechanism, including any support frame connecting it to the floor. In addition, the force is now applied in four orthogonal directions, rather than just downward. This is an acknowledgement that loading on the impactor can be in any direction.

Since the test is performed on the device in a test-ready configuration, the allowable displacement is 20 mm rather than the 10 mm recommended by the AORC in Table 41. The 10 mm value would be more appropriate for a test that excludes the supporting frame of the test device, as did the AORC recommendation.

There is no reason to specify the displacement measurement accuracy for the impactor since we will use a method sufficiently accurate to determine that the displacement limit has been exceeded or not. There is also no reason to specify a minimum time from launch until the impact speed is obtained; how long it takes the impactor is irrelevant to the test as long as it arrives at the specified delay times of 1.5 ±0.1 seconds and 6.0 ±0.1 seconds.

A very important impactor characteristic is dynamic friction. We have indicated in S7.3 of the standard that the dynamic friction must not exceed 0.25. This matches the AORC recommendation. In the technical report for this final rule, we provided these dynamic friction measurements for the agency's new impactor and how the agency determined dynamic friction characteristics.

We note that the dynamic friction test differs from the static deflection test in that it need not be done on the support frame that would connect to the impactor in a test-ready configuration. We believe this is acceptable since it is not likely that the static deflection of the entire frame will influence the dynamic friction determination. We also think it is acceptable that the perpendicular loading for the dynamic friction testing is achieved through gravity and rotation of the impactor and bearings rather than by pulling in four orthogonal directions, as is done in the static deflection tests. Practically speaking, there is no other way to perform the test.

We believe that this detailed dynamic friction test in S7.3 of the standard will fulfill the purpose of the requirements previously specified in the NPRM for unobstructed velocity (proposed S7.2.1) and obstructed push force (proposed S7.2.2). We have reduced the maximum allowable dynamic coefficient of friction of the test device by a factor of 5 from 1.29 (NPRM) to 0.25 (final rule). In addition, S7.2.1 allowed as much as a 15 percent velocity loss over a range of impactor stroke. Testing of the new impactor found about a 1 percent loss in impactor speed over a stroke of more than 150 mm. Thus, we conclude that proposed S7.2.1 can be removed with no negative effect on the test procedure.

We understood Honda's comments on the issue of targeting accuracy (see S7.4 in the final rule) as seeking clarification as to when the accuracy is to be determined, i.e., would the tester need to know that for any particular impact test the ejection impactor targeting point was within the required cylindrical targeting zone shown in Figure 16 of the NPRM. The answer to Honda's question is provided in S7 of the standard, where it is stated: "[t]he ability of a test device to meet these specifications may be determined outside of the vehicle." That is, it is necessary that the test device being used meet the characteristics in S7, but these need not and cannot be determined during the test. We cannot see that it would be feasible to perform these calibration measurements during a vehicle test. Honda requested the agency specify how often and/or when these calibration tests should be done. We cannot make such a pronouncement in the regulatory text. Frequency of calibration is a test device and due care-specific issue and must be determined case by case.

Honda also wanted to know how targeting accuracy would be measured by the agency. On our new impactor, we made this determination through analysis of high speed video. We found that the impactor met the required accuracy. We can envision other measurement techniques that utilize witness marks on stationary targets, or that make witness marks on the headform.

i. Readiness Indicator

NHTSA proposed a requirement for a monitoring system with a readiness

indicator for ejection mitigation systems that deploy in a rollover, such as that required for frontal air bags in S4.5.2 of FMVSS No. 208. 74 FR at 63218.

No comments were received opposing the proposal. Accordingly, the proposal is adopted for the reasons discussed in the NPRM.

j. Other Issues

1. Rollover Sensors

The NPRM did not require vehicle manufacturers to provide a sensor that deploys the ejection countermeasure in a rollover or side impact crash, and did not dictate the performance of any supplied sensor. We were concerned as to whether specifying performance features for the sensor could satisfactorily capture the myriad of rollovers occurring in the real-world. Moreover, we explained that ejection mitigation air bag curtains are now being designed, developed, and implemented by industry and are deploying satisfactorily in the field.

We believed there would be no incentive for manufacturers to provide an ejection mitigation side curtain designed to meet the standard without providing the sensor to deploy it in a rollover crash. In addition, under the proposed requirements of the standard, manufacturers would be required to provide written information to NHTSA, upon the agency's request, explaining the basic operational characteristics of their rollover sensor system. We also proposed to deploy the side curtain in our compliance testing only if the owner's manual or other written material informs the owner that the vehicle is equipped with an ejection mitigation countermeasure that deploys in the event of a rollover.

The NPRM also discussed alternatives considered by the agency to the approach proposed, such as requiring that the rollover sensors be provided as a piece of equipment and defining such a piece of equipment, or specifying a test that would assure the presence of a rollover sensor on the vehicle. Advantages and disadvantages of the approaches were presented.

Comments

Nearly all comments from vehicle manufacturers and air bag suppliers supported the NPRM's not establishing specific rollover sensor requirements or performance tests. The Alliance concurred with the NPRM that sensors are performing well in the field. GM stated its support for only deploying air bags "during the compliance test that have been identified in the owner's manual as rollover-enabled. This is a practicable and reasonable approach." GM agreed that manufacturers would have no incentive to misidentify an air bag system as rollover capable. AIAM stated that manufacturers have their own test and calibration processes for crash sensors, so adding any tests in the final rule would only add complexity to manufacturers' test plans for little or no benefit. AIAM believed that the definition of sensor deployment requirements is vehicle specific due to the different nature of such factors as mass distribution, center of gravity height and use of stability systems. Therefore, AIAM believed that setting a generic test requirement would not be feasible.

On the other hand, Honda believed that "some manner of performance criteria may be necessary for rollover sensors required for deployment of such countermeasures." The commenter encouraged NHTSA to establish basic performance criteria "consistent with other elements of the test procedure for FMVSS No. 226, if possible." Honda suggested a definition for "rollover sensor" and suggested that NHTSA "establish a minimum requirement for the system configuration."

Advocates and Public Citizen requested that the final rule place requirements on sensors that would deploy the ejection countermeasures rather than leave it to the discretion of the manufacturer. Advocates believed that NHTSA should specify requirements for sensors to ensure sustained inflation throughout the long event of a rollover with multiple quarter-turns. Public Citizen recommended a dynamic test that "would allow the agency to measure both the presence and the performance of rollover sensors."

IIHS stated that while it understood the agency's reluctance to specify performance requirements for sensors that may not capture the scope of real-world rollover crash scenarios, NHTSA should continue monitoring field data to determine the adequacy of the agency's approach.

Agency Response

This final rule adopts the approach of the NPRM and does not specify direct rollover sensor specifications. The agency is not aware of any repeatable rollover test that replicates the breadth of real-world rollovers addressed by this rulemaking. Current dynamic tests, such as the 208 Dolly test, do not allow the agency to determine how well the sensor will perform in the field. The 208 Dolly test offers little challenge to the sensor and, according to Viano and Parenteau,[143] represents a very small portion of rollover crashes. See the NPRM, 74 FR at 63218, for additional discussion of dynamic rollover testing.

With respect to Honda's comment on specification of "some manner of performance criteria" and/or a definition for "rollover sensor," this concept is very similar to an option discussed in the NPRM preamble (Equipment Definition Option) (74 FR at 63218). We indicated in that analysis that this option was problematic for several reasons. We stated that such an option has the—

> limitation of having to definitively specify the item of equipment it would be requiring, which might necessitate adopting and applying an overly restricted view of what a deployable rollover is and perhaps what it is not. For example, we can contemplate rollovers that have such an extremely slow roll rate when it would not be necessary or desirable for the countermeasure to deploy. That being the case, a reasonable definition of a rollover sensor might include a roll rate specification as a function of roll angle. Developing such a definition requires vehicle roll angle versus rate data, which are not readily available to NHTSA. Another potential drawback of this option is that without a test or tests to assess compliance with the definition, enforcement of the requirement could be restricted. An approach for a compliance test could be for NHTSA to remove the sensor from the vehicle and subject the sensor to a performance test to assess whether a specified performance requirement is achieved, but the agency has limited information at this time on which to develop performance parameters or a compliance test.

Id.

As Honda's comments did not address the shortcomings of this option, the agency continues to have concerns. We thus decline to implement Honda's request in this final rule.

In view of the determination to adopt the approach of the NPRM, and after reviewing the comments, we conclude that it is critical that written information be provided in the owner's manual that describes how the ejection mitigation countermeasure deploys in the event of a rollover (see regulatory text of S4.2.3(a) of this final rule) [144] and how

[143] Viano D, Parenteau C., "Rollover Crash Sensing and Safety Overview," SAE 2004–01–0342.

[144] Ford provided excerpts from the owner's manual of a vehicle with a rollover curtain air bag, and asked if the information would meet the requirements of S4.2.3(a), "Written information." (NHTSA–2009–0183–0047, p. 20.) Ford's excerpt stated in part: "The Safety Canopy system is designed to activate when the vehicle sustains lateral deceleration sufficient to cause the side crash sensor to close an electrical circuit that initiates Safety Canopy inflation or when a certain likelihood of a rollover event is detected by the rollover sensor." Our answer is yes.

system readiness is monitored (see S4.2.3(b)). It is also important that the test procedure not deploy the ejection countermeasure if this information is not provided (see S5.5(c)). We also adopt the requirement that the final rule require manufacturers to provide more detailed technical information to the agency upon request (see S4.2.4).

Field data on vehicles with rollover sensors continue to indicate that curtains are deploying in rollovers when they should. Of the 21 RODSS cases, four NASS cases and 48 SCI cases believed to involve vehicle rollover crashes and presumed to have rollover deployable curtains, five were determined not to have deployed.

We conducted an in-depth review of these five cases. Four of the five cases had a significant frontal impact that preceded the rollover. These impacts may have destroyed the vehicle battery and thus eliminated the primary power source for deploying the rollover curtain. There is also some question as to whether one of these vehicles was definitely equipped with a rollover sensor, since the system was an option on this vehicle. In one case, the vehicle's kinematics were very complex and may have included some motion not typical of a lateral rollover.

After reviewing the five non-deployment cases, it was not apparent to us that there was a problem with the rollover sensor that would have been identified by a test for a sensor, such as the Equipment Definition test or Presence test discussed in the NPRM (74 FR at 63218). We cannot make a finding that in these cases, the rollover curtains' non-deployment was unrelated to the initial frontal impacts. A presence test that only addressed whether the curtain will deploy, that did not account for a significant initial frontal impact, might not have made any difference on the deployment of these rollover curtains.

We have become interested, however, after reviewing the field data, as to whether ejection mitigation systems could have a backup power source, such as a capacitor, that can provide the power for curtain deployment within some short time period after primary power is lost. It is our understanding that generally vehicles currently have such energy storage systems, but these systems may not have the ability to deploy rollover curtains when the rollover is subsequent to a frontal impact causing the loss of power. There were only a handful of cases on hand. We would like to learn more about this issue.

We are not ready to specify in this final rule some sort of requirement related to the ability to deploy the curtain after loss of primary power. For one thing, we believe that this issue is outside of the scope of notice of the NPRM. Moreover, NHTSA would like to gain more knowledge in this area. We would like to analyze the vehicle kinematics that result when a frontal crash is followed by a rollover to better understand the amount of time secondary power is, and should be, available. Data available from event data recorders may provide a starting point for the analysis of this issue. We have begun a review of the EDR data available to the agency and will continue to monitor data as it becomes available. We would like to find out if there is a problem in the field and seek to know more about the amount of storage time capacitors typically have vis-à-vis their ability to deploy the curtain after power is lost.

2. Quasi-Static Loading

We requested comments on the need for an additional test that would impose quasi-static loading on the ejection countermeasure. Films of occupant kinematics in vehicle rollover testing and in DRF testing indicate that ejection mitigation countermeasures can be exposed to quasi-static loading during a rollover, in addition to short-duration impacts that the headform test replicates. Quasi-static loading can occur when an occupant contacts the countermeasure and loads it throughout or nearly throughout an entire rollover event.

Comments

AIAM commented that in the absence of data demonstrating that countermeasures designed to meet the proposed requirements are not adequate to address quasi-static loading, there is no basis for adopting such a test requirement at this time.

Agency Response

We are not adopting a requirement at this time. Instead, we plan to pursue some limited testing in the near term to see how an ejection mitigation countermeasure that performs well to the requirements in the final rule performs in a quasi-static test. At this time, there are no data available to the agency. Therefore, we cannot determine the consistency, or lack thereof, between quasi-static performance and impact test performance.

3. Full Vehicle Test

The NPRM explained the agency's position that the component test of FMVSS No. 226 would not only distinguish between acceptable and unacceptable performance in side curtain air bags, but has advantages over a full vehicle dynamic test. The acceptable (or poor) performance in the laboratory test correlated to the acceptable (or poor) performance in the dynamic test. The component test was able to reveal deficiencies in window coverage of ejection mitigation curtains that resulted in partial or full ejections in dynamic conditions. Incorporating the component test into an ejection mitigation standard would ensure that ejection mitigation countermeasures provide sufficient coverage of the window opening for as long in the crash event as the risk of ejection exists, which is a key component contributing to the efficacy of the system.

The NPRM further noted that rollover crash tests can have an undesirable amount of variability in vehicle and occupant kinematics. In contrast, the repeatability of the component test has been shown to be good. Moreover, there are many types of rollover crashes, and within each crash type the vehicle speed and other parameters can vary widely. A curb trip can be a very fast event with a relatively high lateral acceleration. Soil and gravel trips have lower lateral accelerations than a curb trip and lower initial roll rates. Fall-over rollovers are the longest duration events, and it can be difficult to distinguish between rollover and non-rollover events. Viano and Parenteau correlated eight different tests to six rollover definitions from NASS–CDS. Their analysis indicated that the types of rollovers occurring in the real-world varied significantly. Soil trip rollovers accounted for more than 47 percent of the rollovers in the field, while less than 1 percent of real-world rollovers were represented by the 208 Dolly test. 74 FR at 63185.

The NPRM also discussed our belief that occupant kinematics will also vary with these crash types, resulting in different probabilities of occupant contact on certain areas of the side window opening with differing impact energies. *Id.* A single full vehicle rollover test could narrowly focus on only certain types of rollover crashes occurring in the field. We noted in the NPRM our concern that a comprehensive assessment of ejection mitigation countermeasures through full vehicle dynamic testing may only be possible if it were to involve multiple crash scenarios. Such a suite of tests imposes test burdens that could be lessened by a component test. We also noted that a comprehensive suite of full-vehicle dynamic tests would likely involve many more years of research, which would delay the rulemaking

action and the potential for incorporating life-saving technologies. The agency stated that such a delay appears unwarranted, given that NHTSA believes the component test will be an effective means of determining the acceptability of ejection countermeasures.

Comments

AIAM agreed with the agency's view that a dynamic full vehicle test should not be pursued at this time. The commenter concurred that it is not clear how the agency could represent the wide range of rollover crash scenarios with a single test mode, and that manufacturer certification using a series of test modes would be unduly burdensome. AIAM also stated, "Making a dynamic rollover test adequately repeatable for regulatory purposes would also be a very significant challenge." AIAM supported continued research on developing a practicable dynamic test approach that provides additional safety benefits.

In contrast, Batzer and Ziejewski recommended that in addition to an impact test, NHTSA should "mandate that all manufacturers perform at least one FMVSS–208 style dolly rollover test." Advocates believed that the FMVSS No. 226 impact test does not account for "door-window frame distortion that can occur in rollover crashes" and that this could result in reduced curtain air bag effectiveness. Public Citizen also supported a whole vehicle dynamic test. Public Citizen stated that further delays needed to develop a dynamic test would "benefit occupants in rollover crashes, if a dynamic rollover test resulted in a better standard that was more representative of real world crash conditions." The commenter also stated that the agency "cannot simply add up the sum of the target populations identified in each of its rollover rulemakings and claim to have protected occupants."

Agency Response

For the reasons discussed in the NPRM, the final rule will not contain a full vehicle dynamic test to evaluate ejection mitigation.

We understand the appeal of a dynamic test for ejection mitigation as well as all aspects of rollover protection, a complement of sorts to frontal and side protection offered by the dynamic tests in FMVSS Nos. 208 and 214, respectively. As a matter of fact, the agency is currently pursuing a research program looking at the development of a dynamic test to address roof strength. In addition, the agency has been pursuing laboratory research on restraint system (*e.g.,* seat belt system) optimization for rollover crashes.

As it happens, however, a full vehicle dynamic test for rollover crashworthiness systems is not available. An FMVSS No. 208 (frontal impact) or No. 214 (side impact) test presents different challenges than a rollover test. Frontal and side impacts, while deadly, are less complex by comparison to a rollover crash. As explained in the NPRM, rollover crash tests have a high degree of variability in vehicle and occupant kinematics. There are many types of rollover crashes, and within each crash type the vehicle speed, roll rate, roll axis and other parameters can vary widely. In contrast, the critical parameters for planar crashes can be captured by the direction of impact and ΔV. It is a relatively simple matter to develop a test(s) (*i.e.,* a vehicle into barrier or object into vehicle) that results in the desired vehicle ΔV in the desired direction.

Nor might a full vehicle dynamic test be available as an outgrowth of the agency's roof crush and seat belt system research. The vehicle kinematics involved in assessing enhanced protection of the occupant within the vehicle (studied in the roof crush and belt system programs) may be significantly different from those involved in mitigating the risks of occupant ejection to belted and unbelted occupants. A dynamic test that is appropriate for assessing roof crush and seat belt performance may not necessarily provide the same kind of challenge to ejection mitigation.

It may or may not be suitable to have a single rollover test to assess roof crush and seat belt performance. For ejection mitigation, it is unlikely that a single rollover test would be sufficient to address the many types of rollovers that occur in the field.[145] We would want the dynamic test to assure that an ejection mitigation countermeasure constrains belted and unbelted occupants in all types of rollover crashes. However, at this time there is no archetype rollover crash that can be replicated in laboratory testing.[146]

We stated in the NPRM preamble, "a comprehensive assessment of ejection mitigation countermeasures through full vehicle dynamic testing may only be possible if it were to involve multiple crash scenarios. Such a suite of tests imposes test burdens that could be assuaged by a component test such as that proposed today." 74 FR at 63186. We hope that in the future, a full vehicle dynamic test, or a suite of tests, could be developed that is appropriate for use in FMVSS No. 226. However, at this time, there is not a viable full vehicle rollover test procedure to evaluate ejection mitigation. In response to Public Citizen, we strongly disagree that a delay of this rulemaking to develop a dynamic test would be justified. This final rule will save over 370 lives a year. Each year delayed to develop what is now an indefinable full vehicle test will have a substantial human cost.

Public Citizen also commented that the agency "cannot simply add up the sum of the target populations identified in each of its rollover rulemakings and claim to have protected occupants." The agency takes great care when doing the benefits assessment to not double count lives saved. If we assume a specific population is saved by one of our standards, we do not count them again when determining the benefits for another. In this way, our estimates are conservative.

4. Minor Clarifications to the Proposed Regulatory Text

In preparing the final rule regulatory text, we made some changes to make the text clearer and easier to understand. The changes were not meant to alter the requirements of the proposal. Below we provide a listing of the more noteworthy of these minor changes and a brief rationale for the change.

S3. *Ejection Impactor*—Deleted "It consists of an ejection headform attached to a shaft" and moved it to S7.1. This was done because this descriptive information is consistent with the type of information provided in S7.1.

S3. *Ejection propulsion mechanism*—Deleted "specified in S7.2 of this Standard No. 226." This was deleted because S7.2 (New S7.3) does not really

[145] We have already discussed our determination that the 208 Dolly test is not suitable for ejection mitigation testing. See, e.g., 74 FR at 63185. The 208 Dolly test represents less than 1 percent of real-world rollovers. Further, some recent experience with the 208 Dolly test makes problematic its implementation as a replacement for the impact test or an additional test. During recent tests in our rollover restraints research program, we attempted to subject a MY 2007 Ford Expedition to the 208 Dolly procedure. However, two out of five attempts failed to initiate a roll of even one quarter-turn. We acknowledge that the above was not a typical result of 208 Dolly testing within the agency's experience, but it does highlight testing issues.

[146] A full vehicle dynamic test would presumably involve the use of anthropomorphic test devices (ATDs). There is some question whether the currently available ATDs offer an acceptable level of biofidelity with respect to occupant ejection. For example, the hip articulation for the Hybrid III dummies is limited, which may alter their ability to replicated real world occupant kinematics. An appropriate ATD for use in the test would have to be explored.

provide information specific to the propulsion mechanism.

S3. *Target Outline*—Eliminated the term "target outline" and replace it with "target" throughout the regulatory text. This does not result in any substantive change in the standard, since in the NPRM these terms were defined to be interchangeable in the regulatory text.

S3. *Walk-in van*—Deleted the second sentence indicating that the seating position must be forward facing and edited the first sentence to indicate the only seating position is the driver. This was done to eliminate redundancy in the definition.

S4.1.1—Added text to the first sentence referencing S8. This was done to provide clarity and similarity with other standards.

S5.1—The wording of the third sentence was modified to clarify that the countermeasure was being struck at the defined target locations.

New S5.2.1.1 (NPRM S5.2.1(a)), S5.5.5, S5.4.1.1—All occurrences of "daylight opening" were replaced with "side daylight opening."

New S5.2.1.1 (NPRM S5.2.1(a)), second sentences—Added the word "projection" after "side daylight opening."

New S5.2.2(a) (NPRM S5.2)—Deleted "and the x–z plane of the target outline within ±1 degree of a vehicle vertical longitudinal plane." This was a redundant constraint. However, text was added to indicate that the y axis of the target points outboard.

New S5.2.3.3 (NPRM S5.2.2.3)—Revisions were made to the structure of this section to clarify the determination of primary targets.

S5.5(a)—The sentence was modified to make it clear that it was the countermeasure that must be impacted at the specified time.

S5.5(a) and (b)—Replaced "velocity" with "speed."

S6.1—Added text to clarify how the vehicle attitude is to be adjusted.

k. Practicability

NHTSA believed that meeting the proposed requirements as they applied to the side windows at the first three rows was practicable. There were a number of vehicles with side air bag curtains that cover the windows adjacent to rows 1, 2, and 3, such as the 2005–2007 MY Honda Odyssey, 2006 Mercury Monterey, 2007 Chevrolet Tahoe, and 2007 Ford Expedition.[147] The agency also believed it was practicable to produce vehicles that would meet the proposed performance requirements.

The NPRM had a proposed 24 km/h–1.5 second test, which has been reduced in this final rule to 20 km/h-1.5 second. Some of the current production vehicles tested during the development of the NPRM came close to meeting the 100 mm displacement limit at all target locations and impact speeds. The most challenging target location was A1, with A4 being the least challenging. For the 2nd row windows, the limited data indicated target location B1 was more challenging than B4. Only two vehicles were tested at the 3rd row. For these systems, C4 was more challenging than C1.

The agency stated that the primary parameters that determine the stringency of the test were: (a) The impactor dimensions and mass; (b) the displacement limit; (c) impactor speed and time of impact; and (d) target locations. Comments focused on (c) above, specifically impactor speed, to argue for reducing the stringency of the test based on practicability grounds.

We discussed in an earlier section of this preamble our decision to reduce the impactor speed from 24 km/h–1.5 second (400 J) to 20 km/h–1.5 second (278 J), based on a reanalysis of the research data used for the NPRM. We believe this reduction in test velocity resolves many of the comments, described below, that raised concerns about the practicability of meeting a 24 km/h–1.5 second test. However, we wish to address the concerns about practicability to explore any remaining questions about the practicability of meeting a 20 km/h–1.5 second requirement. Further, we would like to discuss issues relating to the practicability and cost of meeting a 24 km/h–1.5 second requirement.

Comments

All comments relating to practicability were submitted by vehicle manufacturers. The comments were focused on side curtain air bags as the sole countermeasure for the FMVSS No. 226 requirements. The comments did not appear to dispute the potential of manufacturing side curtain air bag systems that could meet the NPRM; rather they expressed concerns with the potential negative trade-offs associated with such systems for both side impact and OOP occupants.

Honda referred to agency statements in the NPRM that indicated that two methods of improving the ejection mitigation performance of curtain air bags were to make them thicker and to increase their internal pressure. Honda provided data on the relationship between internal pressure and impactor displacement. Honda argued that increasing tank pressure of an air bag design to meet the proposed requirements (to produce less displacement of the impactor) results in notable increases in Nij and neck compression measures. Honda believed that if 200 J is set as the impact energy limit (17 km/h impact), "the primary objective of the side curtain airbag of occupant protection can be balanced with the proposal for occupant ejection mitigation without significant change to current side curtain airbag designs for some vehicles."

VW also provided information showing the relationship between impactor displacement and air bag pressure. It estimated that the initial internal pressure would need "to be increased 2–3 times depending on the actual kinetic energy of the impactor and the NPRM's required excursion limits." VW stated that "the above mentioned pressure increase for the ejection mitigation test will result in a detuning of the airbag and in deterioration of the side crash test results" relevant to NCAP and IIHS consumer information programs. VW believed there would be a reduction of overall fleet star ratings and a reduction in occupant safety in conventional side crashes.

The Alliance provided research performed by Toyota that the Alliance believed "illustrates the increased OOP risk associated with the high impact energy (400 Joule impact) and limited excursion (100 mm) requirements proposed in the NPRM." In this research, two SUVs and two passenger cars were tested to the 24 km/h–1.5 second impact test and subsequently to OOP testing using the Technical Working Group (TWG) Recommended Practice with an inboard facing 5th percentile adult female dummy.[148] When changes were made to the side curtain air bag systems by increasing internal pressure and coverage to meet a 160 mm displacement limit when tested at 24 km/h–1.5 seconds, the Alliance reported that OOP values increased from approximately 80 percent of IARVs to about 105 percent of IARVs.

[147] Since that time the following vehicles with three rows of coverage have been tested: MY 2007 Jeep Commander, MY 2008 Dodge Caravan, MY 2008 Ford Taurus X, and MY 2008 Toyota Highlander.

[148] The TWG Recommended Procedures were developed to evaluate the risk of side air bags to children who are out-of-position. Through a voluntary agreement with NHTSA, vehicle manufacturers consented to meet the TWG. The agency requests the results of testing through the Buying a Safer Car program and publishes the data annually.

Agency Response

It appears from the comments that if the impact speed was 24 km/h, some manufacturers would have to increase the air pressure in their side curtain air bags to meet the requirement. We estimate that this approach to meet a 24 km/h test would add $7.53 to the $31 incremental cost of meeting a 20 km/h test. This added cost is for a larger capacity inflator. Some manufacturers have commented that increasing air bag pressure in current bags to meet a 24 km/h–1.5 second test increases HIC values measured in a side impact test and IARVs measured in OOP tests. If manufacturers were attempting to bring a curtain air bag into compliance that was well outside of the 100 mm limit by only increasing internal pressure, the air bag would likely become more rigid. Whether those increased HIC values and IARVs in OOP tests from increased air bag pressure pose an unreasonable safety risk has not been shown, but so-called "negative trade-offs" concern the agency in any rulemaking.

New side curtain air bag designs appear to be evolving that show promise in meeting the 100 mm limit of impactor displacement when tested to a 24 km/h-1.5 second condition, without undesirably affecting side impact and OOP test results.

However, if these systems require significantly more air bag volume, they may be more costly than a system that meets a 24 km/h requirement by increased air pressure. We estimate that, for a vehicle with an air bag system that uses higher volume and more material to meet the 24 km/h requirement, $37.87 would be added to the $31 incremental cost of a system that meets a 20 km/h requirement.[149]

Air bag supplier Takata met with the agency on July 28, 2009, to discuss its effort at designing an ejection mitigation system to meet a December 2006 NHTSA ejection mitigation research test procedure at a displacement limit of 100 mm at 24 km/h-1.5 second impact.[150] Takata explained that it believed there were two potential ways of meeting the requirement: By way of retaining a strong membrane over the window opening, or by absorbing the impactor energy. For the first approach, Takata stated that the strong membrane could be achieved by laminated glazing or a high stiffness/pressure curtain. The second energy absorption method could be achieved by air bags of increased volume or air bags of a different shape to increase impactor stroke. Takata said it chose this second approach, to develop an air bag of a different shape.[151]

Takata stated that a new air bag design it has developed was integrated into a sedan and tested to the 24 km/h-1.5 second and 16 km/h-6 second impacts, and to TWG OOP requirements using both the 5th percentile adult female and 6-year-old (6YO) child dummies. The greatest displacement for the 24 km/h-1.5 second test was approximately 82 mm at A1. The greatest displacement at the 16 km/h-6 second test was approximately 79 mm at B1. The air bag pressure at time of impact was reported as 30 kPa.

The results from the TWG testing are shown in Takata's docket submission. The 5th percentile adult female results have a maximum value of approximately 55 percent of the IARVs. For the 6YO child dummy, no injury measure exceeded 20 percent of the IARVs.

Takata determined that its new shape curtain could meet the 100 mm displacement limit without advanced glazing with a sufficient compliance margin in a sedan design. At the time of the presentation, Takata indicated that it was working on increasing the compliance margin for a sport utility vehicle (SUV) design and working with a vehicle manufacturer to introduce the technology to the market.

In its comment to the NPRM, the Alliance stated that NHTSA should not interpret information about the performance of innovative side air bag design concepts developed in an attempt to meet the NPRM to mean that "the requirements of the NPRM are practicable."[152] The Alliance claimed that the air bag supplier design evaluations have not addressed the following areas: The ability of the air bags to be deployed in time for a side impact and provide adequate side impact protection; the ability to integrate these bags with FMVSS No. 201 countermeasures; the ability to function in a complete vehicle environment; and the ability to implement this technology across vehicle architectures.

We understand that integrating a component into a full vehicle design involves many factors. However, the Alliance did not provide a convincing discussion as to why NHTSA should not consider a system such as Takata's an indication of the practicability of meeting a 24 km/h-1.5 second impact test.

The Alliance and others questioned whether innovative systems could be packaged in a vehicle to meet FMVSS No. 201 requirements. The commenters did not explain how new ejection mitigation side air curtains would pose unique design problems that would impede the ability to certify to FMVSS No. 201, when current vehicles with rollover side air curtains already are certified to that standard. There was no showing that changes to the air curtains or to the inflator will present insurmountable problems in packaging the equipment to FMVSS No. 201. It also appears that Takata is now working on implementing its system across vehicle architectures. Takata has indicated that its new system has been successfully integrated into a passenger car[153] and is in the midst of SUV integration. Takata did not provide cost data.

The proposed 24 km/h-1.5 second impact has been reduced to 20 km/h-1.5 second in this final rule after our reanalysis of the technical basis for the energy requirement and our FRIA analysis showing a 20 km/h requirement to be more cost effective. With this reduction in impactor speed, vehicles will be able to meet the final rule's requirements with fewer changes to existing designs. Data from agency testing of production vehicles presented earlier in this preamble demonstrate the practicability of the requirements of this final rule. The MY 2007 Mazda CX9 was able to meet the performance tests in the final rule (20 km/h), without modification. This vehicle had a 5-star side impact rating in the 2007 NCAP program.

We recognize that most side curtains will need design changes to various degrees to meet the requirements of this final rule. As Takata indicated in its 2009 meeting, there are several ways to possibly improve performance in the ejection mitigation test. Manufacturers will have to decide what suits their particular situation best. Manufacturers could increase air bag internal pressure to make the air bag stiffer and/or increase the volume to make the air bag thicker. They could possibly change the air bag shape, such as Takata has done, reducing the need for drastic changes in pressure and volume. They might decide to use advanced glazing to

[149] A curtain air bag with more volume will require more air bag material and may also utilize an extra inflator if a single inflator is not sufficient. An extra inflator adds significant cost to a curtain air bag system.

[150] Docket NHTSA–2006–26467–0019.

[151] We note that Takata claimed that it achieved the necessary performance by a change in shape, rather than an increase in pressure or volume.

[152] NHTSA–2009–0183–0029, p. 20.

[153] The Toyota data provided by the Alliance indicated that it was more difficult to meet TWG guidelines in the passenger environment than in SUVs.

supplement ejection mitigation side air curtain performance in meeting the 20 km/h–1.5 second test. In addition, the availability of lead time and a phase-in schedule and advanced credits will provide manufacturers time and flexibility to implement design changes to meet the standard.

Lastly, the Alliance referred to data presented to NHTSA by Ford in a September 10, 2008 meeting [154] obtained by a load cell Ford placed on the impactor shaft behind the headform. The Alliance believed that "[p]reliminary testing has shown the need to further research energy and excursion targets to ensure a 'balanced approach' between excursion and curtain stiffness (load cell measurement) in order to avoid unintended consequences." In response, to our knowledge, no one has established the biomechanical relevance of a uniaxial load measurement on the shaft of an ejection impactor to occupant injury. Until and unless such a relationship can be established, the agency has no reasonable way to judge such data.

l. Vehicle Applicability

This standard applies to passenger cars, multipurpose passenger vehicles (MPVs), trucks and buses with a GVWR of 4,536 kg (10,000 lb) or less, except as noted in this section. Manufacturers are installing or plan to install side impact air bag window curtains in many of these vehicles. These side air bag window curtains are capable of meeting FMVSS No. 214's pole test requirements, which apply to passenger cars, MPVs, trucks and buses with GVWR of 4,536 kg or less. An FMVSS No. 214 air bag window curtain system can be augmented for use as an ejection mitigation window curtain system.

1. Convertibles

The NPRM tentatively determined that the standard should apply to convertibles. We requested comments on the practicability of certifying convertibles to the proposed performance test with door-mounted ejection mitigation curtains and/or advanced glazing.

Comments

All comments from vehicle manufacturers and air bag manufacturers opposed the inclusion of convertibles in FMVSS No. 226 for practicability reasons. Many stated that there was no technology that would allow a convertible to meet the proposed requirements. The AIAM explained that although convertibles can meet FMVSS No. 214's pole test using a door-mounted upwardly deploying air bag, the inflated bag does not have a door frame to which the curtain can be tethered to achieve the lateral stiffness needed for ejection mitigation. Further, the curtains need to be retained by the convertible top, which may not have the same retention capability as the door trim of conventional vehicles.

The Alliance informed the agency that the agency was incorrect in thinking that research from Porsche indicated the feasibility of a door-mounted air bag system for ejection mitigation. The Alliance explained that Porsche meant to describe a "technologically neutral solution" for a coupe, "which unlike a convertible, can be fitted with framed windows." The Alliance stated that it believed that "advanced glazing, with or without a door-mounted airbag, does not constitute a practicable compliance solution for convertibles." AORC stated that its members have been working on this technology but have not yet verified performance relative to this specification.

Comments from Pilkington and from Public Citizen supported including convertibles in the applicability of the standard.

Agency Response

We have decided that the standard will not apply to convertibles. We found compelling the practicability concerns raised by vehicle manufacturers and air bag suppliers related to the near-term technical challenges involved with producing a compliant convertible.

In NPRM preamble, we mentioned Porsche's development of door-mounted curtains that would deploy upward toward the vehicle roof in a rollover. Comments from the Alliance to the NPRM indicated that Porsche was not developing this curtain for ejection mitigation of convertibles, but rather for a coupe.

We sought comments on the feasibility of a door-mounted upwardly-deploying curtain for ejection mitigation of convertibles. Comments from vehicle manufacturers and air bag suppliers indicated that current air bag designs are not effective for ejection mitigation purposes in vehicles without a window frame because the air bag cannot be tethered at the leading edge of the curtain without a firm door frame to which to attach. We concur that an ejection mitigation side curtain air bag must be sturdily tethered in order to meet the displacement limits of this final rule. At this time, convertibles lack the rigid door frame or door pillar to which the ejection mitigation side curtain air bag could be tethered. We agree that current ejection mitigation side curtain air bag designs cannot be used on convertibles, and we are not aware of information indicating the feasibility of developing designs that could be used on convertibles in the foreseeable future.

Advanced glazing will not be an available countermeasure for use in convertibles to meet the standard. Honda and others stated that the advanced glazing on a convertible door is likely to fall out in a rollover crash due to the lack of roof structure and rigid structure around the window opening. In our review of field data on advanced glazing, we found sufficient evidence of glazing vacating the window opening in real world rollover crashes that we decided not to allow movable advanced glazing to be the sole countermeasure used to meet the displacement limits of the standard. Also, movable glazing cannot be present during the 16 km/h-6 second test. With these changes, the glazing-only countermeasure is no longer viable for a movable window opening. A convertible would have to pass the 16 km/h-6 second test with just the door mounted ejection mitigation side curtain air bag. As previously discussed, we do not believe it is practicable for convertibles to meet the test with only an air bag at this time.

In response to a comment from the Alliance, our reasons for excluding convertibles from the standard are not based on FMVSS No. 216's exclusion of convertibles from roof crush resistance requirements. However, we acknowledge that convertibles can pose unique challenges related to the roof. As shown previously in this preamble, there were 16 fatalities and 18 MAIS 3+ injuries due to ejections through a convertible roof closed prior to the crash. For convertibles where the roof was open, the fatalities and MAIS 3+ injuries were 31 and 84, respectively. This indicates that about half of the ejection fatalities through the roof area occurred even when the roof was closed before the crash. (These estimates are based on an extremely small sample size.) These data reflect the problematic nature of convertible ejection protection.

2. Original Roof Modified

NHTSA proposed to exclude vehicles whose original roof was replaced, raised or otherwise modified. A definition of "modified roof" was adopted. No commenter opposed the proposal. NTEA commented in support of it. This final rule adopts the proposed exclusion and definition.

[154] NHTSA–2006–26467–0016.

3. Multi-Stage Manufacture of Work Trucks

NTEA asked that NHTSA exclude work trucks built in two or more stages ("multi-stage vehicles") from FMVSS No. 226. NTEA stated that it expects that if ejection mitigation side curtain air bags are installed by a chassis manufacturer to meet FMVSS No. 226, "this manner of compliance by the chassis manufacturers will result in restrictive or non-existent pass-through compliance guidance for multi-stage manufacturers of work trucks." The commenter believed that the purchasers of these vehicles require an extensive variety of end designs, "including bulkheads and partitions to protect the driver from loose cargo in the back of the vehicle," and that the design of most vehicles will almost certainly affect the performance of the chassis manufacturers' side curtain air bag systems. The commenter believed that "pass-through compliance will prohibit any completions or alterations that could affect the vehicle's center of gravity thus potentially affecting the sensor(s) that control side curtain bag deployment. Also expected to be prohibited for pass-through compliance would be any changes to the trim or headliner around any of the regulated window space." [155]

NHTSA is declining the request for a blanket exclusion of all work trucks built in two or more stages from FMVSS No. 226. To provide relief to multi-stage manufacturers and alterers, we have already excluded vehicles whose original roof was removed, in part or in total, by an alterer or final stage manufacturer. That exclusion addresses designs that will specifically affect side curtain air bag coverage or inflators for which pass-through guidance might not be available.

A final-stage manufacturer can either stay within the incomplete vehicle document (IVD) furnished by the incomplete vehicle manufacturer (which are typically large vehicle manufacturers, such as GM or Ford), or the final-stage manufacturer can work with incomplete vehicle manufacturers to enable the final-stage manufacturer to certify to the new standard.[156] The final-stage manufacturer can also certify to the standard using due care based on an assessment of the information available to the manufacturer.

NTEA contended that work-performing vehicles should be excluded from the standard because producing these vehicles may involve changing the vehicle's center of gravity, which the commenter stated could potentially affect the sensor(s) that control side curtain air bag deployment. The standard adopted today does not specify any requirements for the rollover sensor. In the compliance test, we manually deploy the ejection mitigation side curtain air bags with the stationary vehicle set up in the test laboratory. Changing the center of gravity of the vehicle would not affect our ability to manually deploy the side curtain air bags in the laboratory test. Likewise, lowering the vehicle floor would not affect the ability to manually deploy the side curtain air bags in the test.

Since no certification requirement exists with regard to the sensor, the IVD will not have center of gravity restrictions regarding sensor performance. We have no sound reason to exclude multi-stage work vehicles from the standard based on possible restrictions relating to sensor performance.

Furthermore, we do not believe that changing the center of gravity of the vehicle will affect whether or not an ejection mitigation side curtain air bags deploys in a real world rollover. We believe that incomplete vehicle manufacturers will be able to develop rollover detection technology that can address variability in the vehicle's center of gravity.[157] Sensors that are based on roll angle and roll rate can be made to deploy the air bag when the vehicle rolls, despite changes to the center of gravity of the vehicle involved in installing bulkheads, partitions, etc., to which NTEA alludes. However, such changes may have an effect on the optimization of the sensor for the particular vehicle, which could result in the systems deploying earlier or later than would otherwise be the case. Nonetheless, even without sensor optimization, work vehicles with ejection mitigation side curtain air bags would continue to provide ejection protection to their occupants. If these vehicles were excluded because of center of gravity changes, they would offer no ejection protection in rollovers and no protection against ejection in side impacts.

Some modifications made by a final-stage manufacturer or alterer to the interior of the vehicle could affect the vehicle's compliance with FMVSS No. 226. An example of this is installing a partition. NTEA sought to exclude multi-stage manufactured vehicles with bulkheads and partitions from FMVSS No. 226 since installation of a bulkhead or partition "will almost certainly affect the performance of the chassis manufacturers' side curtain air bag systems."

We decline to adopt a blanket exclusion of multi-stage vehicles with bulkheads or partitions in work vehicles.[158] Such an exclusion would be unreasonably broad. Bulkheads and partitions can be installed so as not to interfere with the deployment of ejection mitigation side curtain air bags. Bulkheads and partitions can be designed to allow for sufficient clearance to allow the air bags to deploy, or may have break-away features to allow a curtain air bag to deploy.[159] The incomplete vehicle manufacturers will be able to provide the appropriate guidance to allow for pass-through certifications. Even if the IVD does not provide guidance, the final-stage manufacturer will be able to ascertain the clearance needed to install the bulkhead or partition. The bulkhead and partition designs will enable the final customer to purchase a vehicle certified to FMVSS No. 226 and to provide the protection of side curtain air bags to their employees who will be occupying the vehicle.

We disagree with the Alliance's comment that the National Traffic and Motor Vehicle Safety Act precludes the agency from applying FMVSS No. 226 to vehicles with partitions. Partitioned vehicles are not a vehicle type. In any event, it is not impracticable to meet the standard with a partition. Manufacturers will be able to determine how to provide a clearance for the ejection mitigation side curtain air bags and/or design and position the partition to take advantage of the shape of the air bag.

NTEA also expressed concerns related to testing cost for those multi-staged vehicles for which pass-through would not be available. It stated that it received estimates for testing costs "from $9,000 to $25,000 for 1–3 rows at 5 tests per

[155] NHTSA–2009–0183–0017, p. 3.

[156] For a discussion of NHTSA's certification regulations for final stage manufacturers, see 71 FR 28168, May 15, 2006, Docket No. NHTSA–2006–24664, Response to petitions for reconsideration of a final rule implementing regulations pertaining to multi-stage vehicles and to altered vehicles. The Background section of that document provides concepts and terminology relating to the certification of multi-stage vehicles.

[157] Mercedes' comment to the NPRM indicated that vehicle manufacturers will work toward developing rollover detection technology for use in large vehicles with center of gravity different than those of passenger cars.

[158] As discussed later in this section, we are allowing a limited exclusion of "security partitions" in multi-stage manufactured or altered law enforcement vehicles, correctional institution vehicles, taxis and limousines.

[159] *See* 75 FR 12123, 12128–12131, March 15, 2010, for a discussion of approaches that are available to multi-stage manufacturers enabling them to certify to FMVSS No. 214's pole test using side impact curtain air bags in vehicles with partitions.

window, and $14,000 to $40,000 for 1–3 rows at 8 tests per window (assuming new airbags and glass for each impact." We do not believe those estimates are accurate. In the PRIA, the agency estimated testing costs would consist of $100 for labor, $300 for an air bag and $400 for advanced glazing.[160] For a 3 row vehicle, assuming testing every target at both test speeds; this would result in a testing cost estimate of $19,200.

NTEA also questioned the potential availability of testing facilities to fulfill the need of the multi-stage manufacturers. We believe testing facilities will be able and willing to provide the market demand for testing. The agency purchased a state-of-the-art ejection mitigation test device for about $150,000 and received delivery in 4½ months.

In addition, multi-stage manufacturers have an additional year after the phase-in is completed to certify compliance to FMVSS No. 226. This leadtime available to multi-stage manufacturers will provide enough time for the manufacturers to work with incomplete vehicle manufacturers to address pass-through certification guidance or perform whatever testing they deem is necessary for certification purposes, including the basis for certifying vehicles with a partition or bulkhead.

NTEA noted that it expected any change to the trim or headliner around any of the window space to be prohibited by the IVD for pass-through compliance. We do not agree. In its comment, Nissan stated that it did not anticipate the headliner would affect performance of the side curtain air bag system. NTEA did not provide information showing otherwise. Further, the multi-stage manufacturers have ample lead time to work with incomplete vehicle manufacturers to develop acceptable trim and headliner changes or to work with test laboratories themselves to assess what changes to the trim or headliner can be made that will not affect the performance of the ejection mitigation system.

We are adopting a suggestion of NTEA with regard to partitions. One of NTEA's comments related to vehicles with partitions or bulkheads that separate areas of the vehicle with and without seating positions. It stated that to the extent the proposed standard applied to multi-stage produced trucks, "NHTSA [should] consider adopting testing parameters similar to those found in FMVSS 201 to effectively exclude any targets that are located behind the forward surface of a partition or bulkhead * * *. We believe it is neither practical nor beneficial to require test target points that could not possibly be contacted by the head of an occupant seated forward of the partition."[161]

We find merit in this suggestion to be consistent with FMVSS No. 201. If there is a permanent partition or bulkhead that separates areas of the vehicle with designated seating positions (DSgPs) from areas that do not have DSgPs, we believe there is no sensible reason to target daylight openings in the latter area. The likelihood of an occupant being ejected from an opening in an area without a DSgP is low. However, to reduce the likelihood an occupant would be in the area without a DSgP, the partition or bulkhead must be fixed to the vehicle and not provide access for an occupant to pass through it. A partition with a door would not be considered as separating the occupant space from non-occupant space.

This final rule makes a limited exclusion of security partitions in multi-stage manufactured or altered law enforcement vehicles, correctional institution vehicles, taxis and limousines. The Alliance and Volvo commented that police vehicles, taxis and limousines with partitions between the first and second rows should be excluded from FMVSS No. 226. The Alliance claimed that any partition installed in a way to not interfere with curtain deployment would leave "a significant gap between the outboard edge of the partition and the inboard surface of the vehicle trim thus rendering it unable to provide either complete security or privacy." The Alliance believed that upwardly-deploying air bags are not feasible. Volvo believed that installing a partition is "always done by a third party and is, for this reason, beyond the vehicle manufacture[r]'s control. To take this potential adaptation into consideration during design, development, and testing would not be possible."

Considering that law enforcement vehicles are more likely to be involved in risky driving operations than other passenger vehicles, NHTSA prefers that the vehicles provide ejection mitigation countermeasures. However, we agree to exclude some vehicles from the standard under certain circumstances due to practical considerations.

Security partitions (*e.g.,* prisoner partitions) are necessary for the safety and security of law enforcement officers. These partitions must be flush against the sides of the vehicle to prevent a rear seat occupant's hand or article from intruding into the officer's compartment. A partition installed by a final-stage manufacturer in an incomplete vehicle or by an alterer in a completed vehicle will interfere with the ejection mitigation side curtain air bags currently being produced. The curtains are tethered from the A-pillar to the C-pillar, so a partition between the 1st and 2nd rows or between the 2nd and 3rd rows will prevent the curtain from properly covering the window opening.

After considering the comments, we believe it would be difficult for incomplete vehicle manufacturers providing vehicles to the final stage manufacturers or alterers to have an alternative design which would be compatible with a security partition.[162] Thus, we are excluding from the standard law enforcement vehicles, correctional institution vehicles, taxis and limousines, if they have a fixed security partition separating the 1st and 2nd or 2nd and 3rd rows, and if they are manufactured in more than one stage or are altered. We do not believe that compatible designs, such as a split curtain, are impossible. Rather, we believe compatible designs will need time to develop.

We do not believe there is any technical barrier to designing curtain(s) to cover side windows that are separated by a partition with two separate curtains. The front of the first row curtain and rear of the second row curtain could be tethered to the A- and C-pillars, respectively. Each curtain could be separately tethered to the B-pillar. We also believe that such a split curtain system could use a single inflator to feed both air bags. The trim on the B-pillar and on the header in front and behind the partition could be split to allow the two air bags to deploy independently. Development of such a vehicle specific curtain would likely require time, and the resources available to an incomplete vehicle manufacturer, i.e., a large vehicle manufacturer.

[160] PRIA, pg. V–21.

[161] This provision is found in S6.3(b) of FMVSS No. 201. Footnote added.

[162] In FMVSS No. 214, we do not exclude police and other vehicles from meeting the standard's pole test requirements. The pole test does not apply to rear seats. To meet the pole test, vehicles must provide head, thorax and pelvic protection. Side window curtains can be used to meet the pole test, but seat- and door-mounted air bags in the front seat are also available for use as well in meeting FMVSS No. 214. Thus, multi-stage manufacturers can work together such that the vehicle in which the partition is installed can meet FMVSS No. 214 with a front seat seat-mounted or door-mounted air bag. At this time there is no countermeasure available from incomplete vehicle manufacturers that could meet FMVSS No. 226 with a security partition flush to the side of the vehicle. A countermeasure only using advanced glazing for movable windows will not meet today's requirements because the 16 km/h test must be passed without glazing in place.

Because we believe incomplete vehicle manufacturers are able to develop a curtain design that is compatible with a partition, we are not extending this exclusion to law enforcement vehicles, correctional institution vehicles, taxis and limousines if they are built in a single stage. We believe it is practicable for such a vehicle to have a single design to meet the final rule and that manufacturers of such vehicles will be capable of applying the necessary resources to meet the standard.

4. Other Issues

i. Vehicles That Have No Doors and Walk-In Vans

Comments were requested but none were received on whether vehicles are still being manufactured that have no doors, or exclusively have doors that are designed to be easily attached or removed so that the vehicle can be operated without doors. NHTSA proposed excluding the vehicles on practicability grounds. This final rule adopts the exclusion.

We did not receive comments on the proposed exclusion of walk-in vans. This final rule excludes the vehicles on practicability grounds.

ii. Vehicles Over 4,536 kg

A few commenters requested that the standard not be limited to vehicles under 4,536 kg (10,000 lb) GVWR. Batzer and Ziejewski stated that school buses over 4,536 kg offered ejection mitigation by virtue of the divider-bar requirement and, therefore, commercial vehicles over 4,536 kg GVWR should be covered as well. The commenter stated that "[w]hile this could conceivably cause some manufacturers distress, they could be provided the opportunity to petition NHTSA for a waiver, and notify the purchaser that their vehicle does not fully comply with pertinent FMVSS regulations." [163]

We did not propose to apply the standard to vehicles with a GVWR over 4,536 kg and did not discuss the possibility of this application of the standard or request comments on this issue. Thus, the requests are outside the scope of the rulemaking. Also, we note that the National Traffic and Motor Vehicle Safety Act provides very limited authority to NHTSA to grant exemptions to manufacturers from meeting the requirements of the Federal motor vehicle safety standards. General authority to grant waivers is not available.

[163] NHTSA–2009–0183–0009, p. 1.

m. Lead Time and Phase-In Schedules; Reporting Requirements

Motor vehicle manufacturers will need lead time to develop and install ejection mitigation countermeasures and rollover sensors. Although inflatable side curtain air bags are being developed in new vehicles to meet the September 1, 2010 date that begins the phase-in of the FMVSS No. 214 final rule for the pole test, to meet the requirements adopted today, these side curtains will have to be made larger to cover more of the window opening, will have to be made more robust to remain inflated longer, and will have to be enhanced (by tethering and other means) to retain vehicle occupants within the vehicle. Moreover, rollover sensors will need to be installed to deploy the ejection mitigation countermeasures in rollover crashes, to augment the sensors needed to deploy the side curtains in side impacts.

Our tests of vehicles to the NPRM's proposed requirements found that vehicle manufacturers were at different stages with respect to designing inflatable ejection mitigation side curtains that meet the requirements then-proposed. Vehicle manufacturers also face unique manufacturing constraints and challenges, *e.g.,* each face differences in the technological advances incorporated in their current air bag systems, differences in engineering resources, and differences in the numbers and type of vehicles for which ejection mitigation systems will need to be incorporated. NHTSA believed that these differing situations can best be accommodated by phasing in the ejection mitigation requirements and by allowing the use of advanced credits.

NHTSA proposed that the phase-in would be implemented in accordance with the following schedule: 20 percent of each manufacturer's vehicles manufactured during the first production year beginning three years after publication of a final rule (for illustration purposes, assuming the final rule is issued in January 2011, under the NPRM that effective date would have been September 1, 2014); 40 percent of each manufacturer's vehicles manufactured during the production year beginning four years after publication of a final rule; 75 percent of vehicles manufactured during the production year beginning five years after publication of a final rule; and all vehicles (without use of advanced credits) manufactured on or after the September 1st following six years after publication of a final rule.

NHTSA also proposed to permit "limited line" manufacturers that produce three or fewer carlines the option of achieving full compliance when the phase-in is completed. The NPRM also proposed that manufacturers of vehicles manufactured in two or more stages and alterers would not be required to meet the phase-in schedule and would not have to achieve full compliance until one year after the phase-in is completed. NHTSA proposed reporting requirements to accompany the phase-in.

Comments

The Alliance asked for an additional year of lead time, believing that it will take at least 12 months after publication of the final rule to obtain impactors meeting the specified performance requirements. Further, the Alliance stated that "even after the devices have been acquired, they must be installed, pre-tested and run-in before they can produce consistent test results which are necessary prior to the initiation of a development process that will yield reproducible results. These logistical steps will unfortunately eliminate one-third of the lead-time intended by the NPRM and because manufacturers will utilize the impactor in the development process, this lost time will significantly impact manufacturers' ability to achieve compliance in the first year of the phase-in as proposed."

The AIAM stated that an additional year of lead time is needed for vehicles not utilizing roof rail mounted curtain air bags to meet FMVSS No. 214. It claimed that these vehicles would need significantly greater redesign and that this work cannot begin until the final rule is issued.

Several vehicle manufacturers asked for the application of advanced credits in the 100 percent certification year. The Alliance contended that manufacturers producing vehicles that do not meet FMVSS No. 214 by way of a side window air bag curtain will need to use credits in the 100 percent year to be able to redesign vehicles to meet FMVSS No. 226. The commenter stated its belief that vehicles with a GVWR over 2,722 kg (6,000 lb) will need more lead time to install larger air bag cushions and inflators to cover the vehicles' larger windows. Porsche stated that compliance with future ejection mitigation requirements will necessitate significant changes to the body-in-white, greenhouse and interior fittings which can only be implemented with the launch of a new vehicle model. Mercedes commented that large vehicles, such as the Mercedes-Benz Sprinter, have large window openings

which Mercedes stated will require a completely new generation of large air bag curtains.

In contrast, glazing manufacturers and consumer groups requested a one-year reduction in both the lead time and phase-in of the final rule. Advocates requested that the phase-in be changed to 40 percent, 75 percent and 100 percent. Guardian stated that "advanced glazing technology is available today." EPGAA stated "many manufacturers' models already incorporate advanced glazing and airbags, and as NHTSA's testing shows, little or no changes are required to existing airbags to achieve compliance with the proposed standard."

Agency Response

To accelerate the ejection mitigation benefits provided by this final rule, the agency has decided to reduce the lead time by a year, to two years of lead time, and to require larger percentages of a manufacturer's fleet to meet the new standard in the first two years of the phase-in schedule than proposed. The overall timetable is comparable to the schedules in FMVSS Nos. 214 and 216, and with the Phase I advanced air bag implementation in FMVSS No. 208.

We reject the argument of the Alliance that a lack of availability of impact testers will delay compliance. Many vehicle manufacturers and air bag manufacturers presented test data to the agency indicating they have access to impact testers and are able to perform the tests. The lead time and phase-in timetable provided will afford sufficient time to perform compliance tests.

We reject the AIAM request for increased lead time for vehicles that do not or will not use curtains to meet the FMVSS No. 214 upgrade. If manufacturers need more time for such vehicles, they can address this through the flexibility offered by the phase-in and credits. AIAM indicated that the additional year was needed to "fully separate the 214 and ejection mitigation phase-in periods." We do not know of a reason why full separation is needed between completion of the phase-in of the FMVSS No. 214 upgraded requirements and the first year of the FMVSS No. 226 phase-in.

The 24 km/h-1.5 second impact proposed in the NPRM has been reduced in this final rule to 20 km/h-1.5 seconds after our reanalysis of the technical basis for the energy requirement. With this reduction in impactor speed, it is expected that fewer changes will be needed to existing designs to meet the final rule's requirements. Data from agency testing of production vehicles presented earlier in this preamble showed that the MY 2007 Mazda CX9 was able to meet the performance tests in the final rule, without modification. Given this reduction in stringency of the test, fewer and/or less substantial vehicle design changes will be needed to meet the standard, and less lead time required to begin phasing in the requirements across the fleet. Accordingly, we believe that two years of lead time are sufficient prior to the phase-in. For the same reason, a greater percentage of vehicles will be able to meet the requirements in each of the phase-in years. Thus, we are slightly increasing the percentages of vehicles in the fleet that will need to meet the ejection mitigation standard during the first two years of the phase-in.

However, vehicle manufacturers are at different stages with respect to designing ejection mitigation systems, and also face differences in the challenges they face and the resources available to them. To provide flexibility to manufacturers in managing their resources to meet this schedule, this final rule provides a multi-year phase-in period and allows credits to be used in the 100 percent phase-in year. The agency did allow the use of credits for the 100 percent year for the advanced air bag rulemaking in FMVSS No. 208. We generally agree with the comments from AIAM stating that credits allow for manufacturer flexibility and earlier safety benefits. The added flexibility of allowing credits in the 100 percent year will allow manufacturers a more seamless introduction of compliant vehicles while enhancing their ability to manage their engineering and manufacturing resources.

We found particularly compelling the comments from Mercedes (regarding the Sprinter), Porsche (regarding the long product cycle of their sports cars), Volvo and other manufacturers. The use of advanced credits in the 100 percent year will provide relief to manufacturers of vehicles with very large windows, vehicles with very long product cycles, and vehicles that are not as far along having side curtain air bags as other vehicles.

The comments showed that manufacturers have unique problems depending on factors such as organizational resources, product mix, and product life cycle. A manufacturer with many different models may have more flexibility in determining which vehicles to certify and in accruing credits. However, this larger portfolio may require greater effort to bring all vehicles into compliance. On the other hand, manufacturers with small portfolios may have less flexibility, but may be able to focus resources on a much smaller number of vehicles to upgrade. The final rule phase-in schedule, even with the added year of credit use, may result in some manufacturers needing to reassess and modify their plans. Nonetheless, we believe that the two-year lead time and the four-year phase-in correctly balances the manufacturers' needs for flexibility and the needs of the agency to limit the length of time for the phase-in to a reasonable period and achieve the safety benefits of the final rule as quickly as practicable.

NHTSA has decided that the lead time and phase-in will continue to apply to all vehicles under 4,536 kg (10,000 lb).[164] We have balanced the safety need to implement the requirements of this final rule as quickly as practicable with the realistic burdens of manufacture.[165] We believe that the relief provided by the additional year to use credits will allow manufacturers the flexibility to address any specific problems associated with bringing heavier vehicles into compliance. Some vehicle manufacturers pointed to FMVSS Nos. 214 and 216 as examples of standards where the certification schedule gave special treatment to heavier vehicles. For example, for FMVSS No. 214, the agency stated that more time was being provided for the pole test of vehicles with GVWR greater than 3,856 kg (8,500 lb) because the vehicles had never been regulated in FMVSS No. 214 and thus "more redesign of the vehicle side structure, interior trim, and/or optimization of dynamically deploying head/side protection systems may be needed in these vehicles than in light vehicles."[166] We do not find the analogy persuasive. The changes needed to meet FMVSS Nos. 214 and 216 were primarily

[164] This does not include limited line manufacturers, manufacturers of multi-stage vehicles, and alterers. Those manufacturers are not required to achieve full compliance until one year after the phase-in is completed.

[165] The agency estimates that vehicles between the ranges of 2,722 kg (6,000 lb) to 4,536 kg (10,000 lb) and 3,856 kg (8,500 lb) to 4,536 kg (10,000 lb) constitute 25 percent and 6 percent of the annual production of vehicles with a GVWR less than 4,536 kg (10,000 lb). The 25 percent estimate can be found in the FRIA for the recent FMVSS No. 216 upgrade (Docket NHTSA–2009–0093). The 6 percent estimate is derived from MY 2010 submissions to the NCAP Buying a Safer Car program and Ward's 2009 Yearbook. We believe that to exclude 25 percent of vehicles less than 4,536 kg (10,000 lb) from meeting FMVSS No. 226 until the end of the phase-in, as would be the case for the 2,722 kg (6,000 lb) split, would be unacceptable in terms of the delayed safety benefits. We also believe that the 6 percent of vehicles, represented by the 3,856 kg (8,500 lb) split, represents a number that can be accommodated with accrued advanced credits.

[166] 72 FR 51911.

structural. FMVSS No. 226 countermeasures for larger vehicles, as indicated by commenters, will likely be larger curtains and longer-lasting inflators. The two-year lead time and phase-in timetable for FMVSS No. 226, and the use of credits in the 100 percent year, will provide the time needed to meet the standard.

We do not agree with the commenters expressing concern that countermeasures for heavier vehicles may have more OOP issues and therefore, in general, need more time to comply. Toyota data submitted by the Alliance indicated that OOP concerns were actually greater for passenger cars than they were for larger vehicles. Further, there is the potential of using advanced glazing in these heavier vehicles, particularly for fixed windows.

We take this opportunity to correct Public Citizen's apparent misinterpretation of the PRIA that led the commenter to believe that the agency estimated that 25 percent of MY 2011 vehicles would be able to comply with the NPRM. In the PRIA, we said that none of the curtain systems tested met the proposed 100 mm displacement limit. However, although none of the current curtain air bags met the displacement requirement, the non-compliant curtains would provide some amount of ejection mitigation. Since we do not want to double count the potential benefits of the rulemaking with the benefits that the non-compliant curtains already provide, these potential benefits were excluded from the benefits estimate.[167] Thus, the 25 percent value quoted by Public Citizen is an adjustment factor, not a compliance rate.[168]

Reporting Requirements

The Alliance mentioned that the NPRM requires manufacturers to report advanced credits 60 days after the end of the production year. It stated that this means the first report would be due on August 31, 2011. (Under the NPRM the first report would actually have to be filed 60 days after the date of August 31, 2011, rather than on August 31.) It opined that "[b]ecause the rule will likely not be finalized until 2011 and the impactors complying with the specifications contained in the final rule may not be available to all manufacturers until the 2012 timeframe, the Alliance recommended that section 585.105 of the regulation be revised so as to provide manufacturers up to one year after the end of the first advanced credit production period to file their advanced credit phase-in report for that year.

We disagree with this request. The commenter's rationale for putting off the filing of the report for a year was the same one it used to argue for an increase in lead time by one year, i.e., an alleged lack of availability of impact testers meeting the final rule requirements. We disagree with this reason because, as previously stated, many vehicle manufacturers and air bag manufacturers presented test data to the agency indicating they have access to impact testers and are able to perform tests. Further, allowing manufacturers one year after the end of the MY 2011 production period ends to report would lead to logistical difficulties for the agency's compliance testing program. At the time we would be purchasing vehicles for the MY 2011 compliance testing, we would not know which vehicles to purchase for testing to FMVSS No. 226 without the reports. If the reports were not due until October 1, 2012, it might be difficult to procure the certified MY 2011 vehicles at that time.

AIAM and VSC asked that small volume and limited line manufacturers be exempt from the phase-in reporting until the first year that they must comply or can earn credits. We agree with the comment. These entities are exempt from the phase-in requirements, so they should be exempt from reporting requirements as well.

XI. Costs and Benefits

The FRIA we have placed in the docket analyzes the impacts of this final rule. A summary of the FRIA follows.

The agency believes that side curtain air bags will be used to pass the ejection mitigation test. We believe that most manufacturers will widen the side curtain air bags that they are providing to meet FMVSS No. 214's pole test requirements, or replace combination (combo) seat-mounted side air bags with a curtain to pass the impactor test of the standard adopted today. We assume that for the most part vehicle manufacturers will install a single-window curtain for each side of the vehicle, and that these window curtains will provide protection for occupants of the first three rows.

This final rule will save 373 lives and prevent 476 serious injuries per year (see Table 42 below). The cost of this final rule is approximately $31 per vehicle (see Table 43). The cost per equivalent life saved is estimated to be $1.4 million (3 percent discount rate)—$1.7 million (7 percent discount rate) (see Table 44 below). Annualized costs and benefits are provided in Table 45.

TABLE 42—ESTIMATED BENEFITS

Fatalities	373
Serious Injuries	476

TABLE 43—ESTIMATED COSTS *

[2009 Economics]

Per Vehicle	$31.
Total Fleet (16.5 million vehicles).	$507 million.

* The system costs are based on vehicles that are equipped with an FMVSS No. 214 curtain system. According to vehicle manufacturers' projections made in 2006, 98.7 percent of Model Year (MY) 2011 vehicles will be equipped with curtain bags and 55 percent of vehicles with curtain bags will be equipped with a rollover sensor.

TABLE 44—COST PER EQUIVALENT LIFE SAVED

3% Discount rate	7% Discount rate
$1.4M	$1.7M

TABLE 45—ANNUALIZED COSTS AND BENEFITS

[In millions of $2009 dollars]

	Annual costs	Annualized benefits	Net benefits
3% Discount Rate	$507M	$2,279M	$1,773
7% Discount Rate	507M	1,814M	1,307

[167] For example, a curtain air bag that completely covers the front window opening and meets the 100 mm displacement requirement at A2, A3, and A4, but not A1. We assumed that the air bag system would provide some benefits, even if it failed to meet the displacement requirement at A1.

[168] The PRIA stated that current ejection mitigation curtain systems are only 46 percent effective in preventing occupants from ejection and that 55 percent of MY 2011 vehicles would be equipped with these non-compliant air bags.

The agency received several comments about the PRIA's cost benefit analysis. Several glazing manufacturers commented that the agency's analysis underestimated air bag costs, did not adequately consider benefits of advanced glazing associated with enhanced security, UV shading, weight reduction, improved energy efficiency, etc., and overstated the cost of advanced glazing. Public Citizen stated that the agency underestimated the benefits of FMVSS No. 226 because we overestimated the effectiveness of ESC. Conversely, IIHS stated we overestimated the benefits of FMVSS No. 226 because we underestimated the benefits of FMVSS No. 216.

In the FRIA, NHTSA responds to all relevant comments on the costs and benefits estimated by the NPRM and PRIA.

XII. Rulemaking Analyses and Notices

Executive Order 12866 (Regulatory Planning and Review) and DOT Regulatory Policies and Procedures

The agency has considered the impact of this rulemaking action under Executive Order 12866 and the Department of Transportation's regulatory policies and procedures. This rulemaking is economically significant and was reviewed by the Office of Management and Budget under E.O. 12866, "Regulatory Planning and Review." The rulemaking action has also been determined to be significant under the Department's regulatory policies and procedures. NHTSA has placed in the docket a Final Regulatory Impact Analysis describing the costs and benefits of this rulemaking action.

Regulatory Flexibility Act

The Regulatory Flexibility Act of 1980, as amended, requires agencies to evaluate the potential effects of their proposed and final rules on small businesses, small organizations and small governmental jurisdictions. I hereby certify that this final rule will not have a significant economic impact on a substantial number of small entities. Small organizations and small governmental units will not be significantly affected since the potential cost impacts associated with this final rule will not significantly affect the price of new motor vehicles.

The final rule could indirectly affect air bag manufacturers and suppliers. These entities do not qualify as small entities.

The final rule will directly affect motor vehicle manufacturers. The FRIA discusses the economic impact of the final rule on small vehicle manufacturers, of which there are six. We believe that the final rule will not have a significant economic impact on these manufacturers. The standard will employ static testing of the ejection mitigation system. The test does not involve destructive crash testing. It only involves the replacement of certain components and small vehicle manufacturers can perform such testing themselves. They can certify compliance using a combination of their own engineering analyses and testing and component testing by air bag suppliers. Already much of the air bag development work for these small vehicle manufacturers is done by air bag suppliers. While typically, air bag suppliers will supply larger vehicle manufacturers during the lead time and phase-in period of this final rule, this rulemaking accounts for this limitation by allowing more time to small manufacturers and limited line manufacturers to comply with the upgraded requirements. They have a year past the end of the phase-in period to comply. This additional time provides flexibility to those entities and enough time to work with the air bag suppliers to meet their needs.

Final-stage vehicle manufacturers buy incomplete vehicles and complete the vehicle. Alterers modify new vehicles, such as by raising the roofs of vehicles. In both cases, NHTSA concludes that the impacts of this final rule on such entities is not significant. Final-stage manufacturers and alterers engaged in raising the roofs of vehicles would not be affected by this final rule because the rule excludes vehicles with raised roofs from the ejection mitigation requirements.

NHTSA believes that work vehicles can be produced in compliance with the standard. Partitions separating a driver from cargo can be installed to accommodate an ejection mitigation side curtain air bag by providing clearance for the air bag. This final rule accommodates partitions installed in police vehicles, limousines and taxis by final-stage manufacturer and alterers by excluding those vehicles from the standard.

Executive Order 13132 (Federalism)

NHTSA has examined today's final rule pursuant to Executive Order 13132 (64 FR 43255, August 10, 1999) and concluded that no additional consultation with States, local governments or their representatives is mandated beyond the rulemaking process. The agency has concluded that the rulemaking would not have sufficient federalism implications to warrant consultation with State and local officials or the preparation of a federalism summary impact statement. The final rule would not have "substantial direct effects on the States, on the relationship between the national government and the States, or on the distribution of power and responsibilities among the various levels of government."

NHTSA rules can preempt in two ways. First, the National Traffic and Motor Vehicle Safety Act contains an express preemption provision: When a motor vehicle safety standard is in effect under this chapter, a State or a political subdivision of a State may prescribe or continue in effect a standard applicable to the same aspect of performance of a motor vehicle or motor vehicle equipment only if the standard is identical to the standard prescribed under this chapter. 49 U.S.C. 30103(b)(1). It is this statutory command by Congress that preempts any non-identical State legislative and administrative law addressing the same aspect of performance.

The express preemption provision described above is subject to a savings clause under which "[c]ompliance with a motor vehicle safety standard prescribed under this chapter does not exempt a person from liability at common law." 49 U.S.C. 30103(e) Pursuant to this provision, State common law tort causes of action against motor vehicle manufacturers that might otherwise be preempted by the express preemption provision are generally preserved. However, the Supreme Court has recognized the possibility, in some instances, of implied preemption of such State common law tort causes of action by virtue of NHTSA's rules, even if not expressly preempted. This second way that NHTSA rules can preempt is dependent upon there being an actual conflict between an FMVSS and the higher standard that would effectively be imposed on motor vehicle manufacturers if someone obtained a State common law tort judgment against the manufacturer, notwithstanding the manufacturer's compliance with the NHTSA standard. Because most NHTSA standards established by an FMVSS are minimum standards, a State common law tort cause of action that seeks to impose a higher standard on motor vehicle manufacturers will generally not be preempted. However, if and when such a conflict does exist—for example, when the standard at issue is both a minimum and a maximum standard—the State common law tort cause of action is impliedly preempted. See *Geier* v. *American Honda Motor Co.,* 529 U.S. 861 (2000).

Pursuant to Executive Order 13132 and 12988, NHTSA has considered whether this rule could or should preempt State common law causes of action. The agency's ability to announce its conclusion regarding the preemptive effect of one of its rules reduces the likelihood that preemption will be an issue in any subsequent tort litigation.

To this end, the agency has examined the nature (*e.g.,* the language and structure of the regulatory text) and objectives of today's rule and finds that this rule, like many NHTSA rules, prescribes only a minimum safety standard. As such, NHTSA does not intend that this rule preempt state tort law that would effectively impose a higher standard on motor vehicle manufacturers than that established by today's rule. Establishment of a higher standard by means of State tort law would not conflict with the minimum standard announced here. Without any conflict, there could not be any implied preemption of a State common law tort cause of action.

Executive Order 12778 (Civil Justice Reform)

With respect to the review of the promulgation of a new regulation, section 3(b) of Executive Order 12988, "Civil Justice Reform" (61 FR 4729, February 7, 1996) requires that Executive agencies make every reasonable effort to ensure that the regulation: (1) Clearly specifies the preemptive effect; (2) clearly specifies the effect on existing Federal law or regulation; (3) provides a clear legal standard for affected conduct, while promoting simplification and burden reduction; (4) clearly specifies the retroactive effect, if any; (5) adequately defines key terms; and (6) addresses other important issues affecting clarity and general draftsmanship under any guidelines issued by the Attorney General. This document is consistent with that requirement.

Pursuant to this Order, NHTSA notes as follows.

The issue of preemption is discussed above in connection with E.O. 13132. NHTSA notes further that there is no requirement that individuals submit a petition for reconsideration or pursue other administrative proceedings before they may file suit in court.

Unfunded Mandates Reform Act

The Unfunded Mandates Reform Act of 1995 (UMRA) requires Federal agencies to prepare a written assessment of the costs, benefits and other effects of proposed or final rules that include a Federal mandate likely to result in the expenditure by State, local or tribal governments, in the aggregate, or by the private sector, of more than $100 million in any one year ($100 million adjusted annually for inflation, with base year of 1995). These effects are discussed earlier in this preamble and in the FRIA.

UMRA also requires an agency issuing a final rule subject to the Act to select the "least costly, most cost-effective or least burdensome alternative that achieves the objectives of the rule." The preamble and the FRIA discuss several alternatives we considered, and the resulting cost and benefits of various alternative countermeasures. The alternatives considered were: (a) Exclusion of the front lower corner of the front side window area (test point A1); (b) a component test consisting of a single headform impact at the center of the side window opening area; and, (c) a full-vehicle dynamic test to evaluate a countermeasure's retention capability instead of the headform component test. The countermeasures examined for alternatives (a) and (b) were various levels of partial window coverage ("partial curtain"). We also examined the potential countermeasure of a partial curtain in combination with the installation of laminated glazing in the front window openings to prevent ejections through test point A1 and the lower gap ("partial curtain plus laminated glazing"). However, as discussed in this preamble and in the FRIA, none of these alternatives achieved the objectives of the alternative adopted today. The agency believes that it has selected the least costly, most cost-effective and least burdensome alternative that achieves the objectives of the rulemaking.

National Environmental Policy Act

NHTSA has analyzed this final rule for the purposes of the National Environmental Policy Act. The agency has determined that implementation of this action would not have any significant impact on the quality of the human environment.

Plain Language

Executive Order 12866 requires each agency to write all rules in plain language. Application of the principles of plain language includes consideration of the following questions:

- Have we organized the material to suit the public's needs?
- Are the requirements in the rule clearly stated?
- Does the rule contain technical language or jargon that isn't clear?
- Would a different format (grouping and order of sections, use of headings, paragraphing) make the rule easier to understand?
- Would more (but shorter) sections be better?
- Could we improve clarity by adding tables, lists, or diagrams?
- What else could we do to make the rule easier to understand?

If you have any responses to these questions, please write to us about them.

Paperwork Reduction Act (PRA)

Under the PRA of 1995, a person is not required to respond to a collection of information by a Federal agency unless the collection displays a valid OMB control number. The final rule contains a collection of information, i.e., the phase-in reporting requirements, requirements to place consumer information about the readiness indicator and about the sensor in the vehicle owner's manual (S4.2.3), and requirements for providing information to NHTSA about a rollover sensor in a compliance test (S4.2.4). There is no burden to the general public.

The collection of information would require manufacturers of passenger cars and of trucks, buses and MPVs with a GVWR of 4,536 kg (10,000 lb) or less, to annually submit a report, and maintain records related to the report, concerning the number of such vehicles that meet the ejection mitigation requirements of this FMVSS. The phase-in of the test requirements would be completed approximately seven years after publication of a final rule (eight years counting the 100 percent credit year). The purpose of the reporting requirements is to aid the agency in determining whether a manufacturer has complied with the ejection mitigation requirements during the phase-in of those requirements, including the manufacturer's use of advanced credits.

Under the PRA, the agency must publish a document in the **Federal Register** providing a 60-day comment period and otherwise consult with members of the public and affected agencies concerning each collection of information. This was accomplished in the NPRM preceding this final rule (74 FR 63225). The Office of Management and Budget (OMB) has promulgated regulations describing what must be included in such a document. Pursuant to OMB's regulations (5 CFR 320.8(d)), NHTSA sought public comment on the following:

(1) Whether the collection of information is necessary for the proper performance of the functions of the agency, including whether the information will have practical utility;

(2) The accuracy of the agency's estimate of the burden of the proposed collection of information, including the validity of the methodology and assumptions used;

(3) How to enhance the quality, utility, and clarity of the information to be collected; and,

(4) How to minimize the burden of the collection of information on those who are to respond, including the use of appropriate automated, electronic, mechanical, or other technological collection techniques or other forms of information technology, *e.g.,* permitting electronic submission of responses.

We published our estimates of the burden to vehicle manufacturers, as follows:

- NHTSA estimated that there are 21 manufacturers of passenger cars, multipurpose passenger vehicles, trucks, and buses with a GVWR of 4,536 kg (10,000 lb) or less;
- NHTSA estimated that the total annual reporting and recordkeeping burden resulting from the collection of information is 1,260 hours;
- NHTSA estimated that the total annual cost burden, in U.S. dollars, will be $0. No additional resources would be expended by vehicle manufacturers to gather annual production information because they already compile this data for their own use.

NHTSA did not receive any comments on the above. Therefore, we are submitting a request for OMB clearance of the collection of information required under today's final rule.

National Technology Transfer and Advancement Act

Under the National Technology Transfer and Advancement Act of 1995 (NTTAA) (Pub. L. 104–113), all Federal agencies and departments shall use technical standards that are developed or adopted by voluntary consensus standards bodies, using such technical standards as a means to carry out policy objectives or activities determined by the agencies and departments.

Voluntary consensus standards are technical standards (*e.g.,* materials specifications, test methods, sampling procedures, and business practices) that are developed or adopted by voluntary consensus standards bodies, such as the International Organization for Standardization (ISO) and the Society of Automotive Engineers. The NTTAA directs us to provide Congress, through OMB, explanations when we decide not to use available and applicable voluntary consensus standards.

Commenters requested that the agency apply voluntary industry standards SAE J2568—Intrusion Resistance of Safety Glazing Systems for Road Vehicles or BSI AU 209—Vehicle Security. These industry standards specify that after testing there must not be separation within the glazing or between the glazing and vehicle body, which would allow for passage of a 40 mm diameter sphere (40 mm gap test).

We studied the potential of applying these standards, but decided against adopting them for several reasons. These standards provide glazing intrusion resistance requirements from external impact (outside-in) as opposed to ejection mitigation (inside-out). Additionally, the requirements are not appropriate for vehicles with only side curtain air bags, given that there is a time dependence associated with a curtain's ejection mitigation performance. Once deployed, the pressure in the air bag continuously decreases. The 16 km/h test is done at 6 seconds to assure that the pressure does not decrease too quickly. It does not seem that the 40 mm gap test could be done after the 6-second impact, in any timeframe which is related to rollover and side impact ejections.

Further, there was no shown safety need for applying the suggested standards. We cannot show that ejections that would not be prevented by the primary 100-mm displacement requirement would be prevented by a secondary 40-mm requirement. Also, it seemed that the 40-mm requirement would indirectly require installation of advanced glazing. As discussed in this preamble, the costs associated with advanced glazing installations at the side windows covered by the standard adopted today are substantial in comparison to a system only utilizing rollover curtains. For these reasons, the agency did not accept the suggestions.

List of Subjects

49 CFR Part 571

Imports, Incorporation by reference, Motor vehicle safety, Reporting and recordkeeping requirements, Tires.

49 CFR Part 585

Motor vehicle safety, Reporting and recordkeeping requirements.

In consideration of the foregoing, NHTSA amends 49 CFR parts 571 and 585 as set forth below.

PART 571—FEDERAL MOTOR VEHICLE SAFETY STANDARDS

■ 1. The authority citation for part 571 continues to read as follows:

Authority: 49 U.S.C. 322, 30111, 30115, 30117 and 30166; delegation of authority at 49 CFR 1.50.

■ 2. Section 571.5(b) is amended by adding, in alphabetical order, an entry to the list of materials incorporated by reference, as follows:

§ 571.5 Matter incorporated by reference.

* * * * *

(b) * * *

"Parts List; Ejection Mitigation Headform Drawing Package," December 2010; "Parts List and Drawings; Ejection Mitigation Headform Drawing Package," December 2010. Copies may be obtained by contacting: Reprographics Technologies, 9000 Virginia Manor Rd., Beltsville, MD 20705, telephone (301) 210–5600.	571.226, S7.1.1

* * * * *

■ 3. Section 571.226 is added to read as follows:

§ 571.226 Standard No. 226; Ejection Mitigation.

S1. *Purpose and Scope.* This standard establishes requirements for ejection mitigation systems to reduce the likelihood of complete and partial ejections of vehicle occupants through side windows during rollovers or side impact events.

S2. *Application.* This standard applies to passenger cars, and to multipurpose passenger vehicles, trucks and buses with a gross vehicle weight rating of 4,536 kg or less, except walk-in vans, modified roof vehicles and convertibles. Also excluded from this standard are law enforcement vehicles, correctional institution vehicles, taxis and limousines, if they have a fixed security partition separating the 1st and 2nd or 2nd and 3rd rows and if they are produced by more than one manufacturer or are altered (within the meaning of 49 CFR 567.7).

S3. *Definitions.*

Ejection impactor means a device specified in S7.1 of this standard that is a component of the ejection mitigation test device and is the moving mass that strikes the ejection mitigation countermeasure.

Ejection impactor targeting point means the intersection of the y-axis of the ejection headform and the outer surface of the ejection headform.

Ejection mitigation countermeasure means a device or devices, except seat belts, integrated into the vehicle that reduce the likelihood of occupant ejection through a side window opening, and that requires no action by the occupant for activation.

Ejection propulsion mechanism means a device that is a component of the ejection mitigation test device consisting of a mechanism capable of propelling the ejection impactor and constraining it to move along its axis or shaft.

Limited-line manufacturer means a manufacturer that sells three or fewer carlines, as that term is defined in 49 CFR 583.4, in the United States during a production year.

Modified roof means the replacement roof on a motor vehicle whose original roof has been removed, in part or in total.

Row means a set of one or more seats whose seat outlines do not overlap with the seat outline of any other seats, when all seats are adjusted to their rearmost normal riding or driving position, when viewed from the side.

Seat outline means the outer limits of a seat projected laterally onto a vertical longitudinal vehicle plane.

Side daylight opening means, other than a door opening, the locus of all points where a horizontal line, perpendicular to the vehicle vertical longitudinal plane, is tangent to the periphery of the opening. The periphery includes surfaces 100 millimeters inboard of the inside surface of the window glazing and 25 mm outboard of the outside surface of the side glazing. The periphery excludes the following: any flexible gasket material or weather stripping used to create a waterproof seal between the glazing or door and the vehicle interior; grab handles used to facilitate occupant egress and ingress; and any part of a seat.

Small manufacturer means an original vehicle manufacturer that produces or assembles fewer than 5,000 vehicles annually for sale in the United States.

Target means the x-z plane projection of the ejection headform face as shown in Figure 1.

Walk-in van means a special cargo/mail delivery vehicle that only has a driver designated seating position. The vehicle has a sliding (or folding) side door and a roof clearance that enables a person of medium stature to enter the passenger compartment area in an upright position.

Zero displacement plane means, a vertical plane parallel to the vehicle longitudinal centerline and tangent to the most outboard surface of the ejection headform when the headform is aligned with an impact target location and just touching the inside surface of a window covering the side daylight opening.

S4. *Phase-in, performance and other requirements.*

S4.1 *Phase-in requirements.*

S4.1.1 Except as provided in S4.1.3 of this standard, a percentage of each manufacturer's vehicle production, as specified in S8 of this standard, manufactured on or after September 1, 2013 to August 31, 2017, shall meet the requirements of S4.2. Vehicles that are not subject to the phase-in may be certified as meeting the requirements specified in this standard.

S4.1.2 Except as provided in S4.1.3 of this section, each vehicle manufactured on or after September 1, 2017 must meet the requirements of S4.2 without use of advanced credits.

S4.1.3 *Exceptions from the phase-in; special allowances.*

(a) Vehicles produced by a small manufacturer and by a limited line manufacturer are not subject to S4.1.1 of this standard, but are subject to S4.1.2.

(b) Vehicles that are altered (within the meaning of 49 CFR 567.7) before September 1, 2018, after having been previously certified in accordance with part 567 of this chapter, and vehicles manufactured in two or more stages before September 1, 2018, are not required to meet the requirements of S4.2. Vehicles that are altered on or after September 1, 2018, and vehicles that are manufactured in two or more stages on or after September 1, 2018, must meet the requirements of S4.2.

S4.2 *Performance and other requirements.*

S4.2.1 When the ejection propulsion mechanism propels the ejection impactor into the impact target locations of each side daylight opening of a vehicle according to the test procedures specified in S5 of this standard, the most outboard surface of the ejection headform must not displace more than 100 millimeters beyond the zero displacement plane.

S4.2.1.1 No vehicle shall use movable glazing as the sole means of meeting the displacement limit of S4.2.1.

S4.2.1.2 Vehicles with an ejection mitigation countermeasure that deploys in the event of a rollover must deploy the countermeasure for the side daylight opening being tested according to the procedure specified in S5 of this standard.

S4.2.1.3 If a side daylight opening contains no target locations, the impact test of S4.2.1 is not performed on that opening.

S4.2.2 Vehicles that have an ejection mitigation countermeasure that deploys in the event of a rollover must have a monitoring system with a readiness indicator. The indicator shall monitor its own readiness and must be clearly visible from the driver's designated seating position. The same readiness indicator required by S4.5.2 of FMVSS No. 208 may be used to meet the requirement. A list of the elements of the system being monitored by the indicator shall be included with the information furnished in accordance with S4.2.3.

S4.2.3 *Written information.*

(a) Vehicles with an ejection mitigation countermeasure that deploys in the event of a rollover must be described as such in the vehicle's owner manual or in other written information provided by the vehicle manufacturer to the consumer.

(b) Vehicles that have an ejection mitigation countermeasure that deploys in the event of a rollover must include in written information a discussion of the readiness indicator required by S4.2.2, specifying a list of the elements of the system being monitored by the indicator, a discussion of the purpose and location of the telltale, and instructions to the consumer on the steps to take if the telltale is illuminated.

S4.2.4 *Technical Documentation.* For vehicles that have an ejection mitigation countermeasure that deploys in the event of a rollover, the vehicle manufacturer must make available to the agency, upon request, the following information: A discussion of the sensor system used to deploy the countermeasure, including the pertinent inputs to the computer or calculations within the computer and how its algorithm uses that information to determine if the countermeasure should be deployed.

S5. *Test procedures.*

S5.1 Demonstrate compliance with S4.2 of this standard in accordance with the test procedures specified in this standard, under the conditions of S6, using the equipment described in S7. In the impact test described by these procedures, target locations are identified (S5.2) and the zero displacement plane location is determined (S5.3). The glazing is pre-broken, fully retracted or removed prior to the impact test (S5.4). The countermeasure is deployed, if applicable, and an ejection impactor (see S7.1) strikes the countermeasure at the impact target locations, at the specified speeds and times (S5.5). The lateral displacement of the ejection impactor beyond the zero displacement plane is measured.

S5.2 *Determination of impact target locations.*

S5.2.1 *Boundary of target location.*

S5.2.1.1 *Initial determination of offset line.* Determine the location of an offset-line within the side daylight opening by projecting each point of the side daylight opening laterally onto a vehicle vertical longitudinal plane. Move each point by 25±2 mm towards the center of the side daylight opening projection and perpendicular to a line tangent to the projection at that point, while maintaining the point on a vehicle vertical longitudinal plane.

S5.2.1.2 *Rearmost limit of offset line.*

(a) *Seats fixed in a forward facing direction.* Except as provided in S5.2.1.2(b), if an offset line extends rearward of a transverse vertical vehicle plane located behind the seating reference point at the distance specified in 5.2.1.2(a)(1) or (2), the transverse vertical vehicle plane defines the rearward edge of the offset line for the purposes of determining target locations.

(1) For a vehicle with fewer than 3 rows—1,400 mm behind the rearmost SgRP.

(2) For a vehicle with 3 or more rows—600 mm behind the 3rd row SgRP.

(b) *Seats not fixed in a forward facing direction.* When the last row seat adjacent to the opening, in the case of a vehicle with fewer than 3 rows, or the 3rd row seat adjacent to the opening, in the case of a vehicle with 3 or more rows, is not fixed in the forward facing direction, the offset line may extend farther rearward than specified in S5.2.1.2(a) under the following conditions. With the seat in any non-forward facing orientation, the seat back set at an inclination position closest to the manufacturer's design seat back angle, and all other seat adjustments at any possible position of adjustment, determine the location of a vertical transverse vehicle plane located behind the portion of the seat rearmost in the vehicle, at the distance specified in 5.2.1.2(b)(1) and (2). The boundary of target locations extends to this vertical plane if it is farther rearward than the plane determined in S5.2.1.2(a).

(1) For a vehicle with fewer than 3 rows—1,400 mm behind the portion of the seat rearmost in the vehicle.

(2) For a vehicle with 3 or more rows—600 mm behind the portion of the seat rearmost in the vehicle, for a seat in the 3rd row.

(c) *Vehicles with partitions or bulkheads.* If a vehicle has a fixed traverse partition or bulkhead through which there is no occupant access and behind which there are no designated seating positions, a vertical transverse vehicle plane 25 mm forward of the most forward portion of the partition or bulkhead defines the rearward edge of the offset line for the purposes of determining target locations when said plane is forward of the limiting plane defined in S5.2.1.2(a) or (b).

S5.2.2 *Preliminary target locations.*

(a) To identify the impact target locations, the following procedures are performed with the x and z axes of the target, shown in Figure 1 (provided for illustration purposes), aligned within ±1 degree of the vehicle longitudinal and vertical axes, respectively, and the target y axis pointing in the outboard direction.

(b) Place targets at any location inside the offset-line where the target is tangent to within ±2 mm of the offset-line at just two or three points (see Figure 2) (figure provided for illustration purposes).

S5.2.3 *Determination of primary target locations.* Divide the side daylight opening into four quadrants by passing a vertical line and a horizontal line, in a vehicle vertical longitudinal plane, through the geometric center of the side daylight opening.

S5.2.3.1 *Front windows.* For any side daylight opening forward of the vehicle B-pillar, the primary quadrants are the forward-lower and rearward-upper.

S5.2.3.2 *Rear windows.* For any side daylight opening rearward of the B-pillar, the primary quadrants are the forward-upper and rearward-lower.

S5.2.3.3 If a primary quadrant contains only one target center, that target is the primary target for that quadrant (*see* Figure 3) (figure provided for illustration purposes). If there is more than one target center in a primary quadrant, the primary target for that quadrant is the lowest target in a lower quadrant and the highest target in an upper quadrant. If there is a primary quadrant that does not contain a target center, the target center closest to the primary quadrant outline is the primary target.

S5.2.4 *Determination of secondary target locations.*

S5.2.4.1 *Front windows.* Measure the horizontal distance between the centers of the primary targets. For a side daylight opening forward of the B-pillar, place one secondary target center rearward of the forward primary target by one-third of the horizontal distance between the primary target centers and tangent with upper portion of the offset-line. Place another secondary target center rearward of the forward primary target by two-thirds of the horizontal distance between the primary target centers and tangent with the lower portion of the offset-line (*see* figure 4) (figure provided for illustration purposes).

S5.2.4.2 *Rear windows.* For side daylight openings rearward of the B-pillar, place one secondary target center rearward of the forward primary target by one-third of the horizontal distance between the primary target centers and tangent with lower portion of the offset-line. Place another secondary target center rearward of the forward primary target by two-thirds of the horizontal distance between the primary target centers and tangent with the upper portion of the offset-line (*see* Figure 4) (figure provided for illustration purposes).

S5.2.5 *Target adjustment.*

S5.2.5.1 *Target elimination and reconstitution.*

S5.2.5.1.1 *Target elimination.* Determine the horizontal and vertical distance between the centers of the targets. If the minimum distance between the z axes of the targets is less than 135 mm and the minimum distance between the x axes of the targets is less than 170 mm, eliminate the targets in the order of priority given in steps 1 through 4 of Table 1 (see Figure 5) (figure provided for illustration purposes). In each case, both the z axes of the targets must be closer than 135 mm and x axes of the targets must be closer than 170 mm. If the minimum distance between the z axes of the targets is not less than 135 mm or the minimum distance between the y axes of the targets is not less than 170 mm, do not eliminate the target. Continue checking all the targets listed in steps 1 through 4 of Table 1.

TABLE 1—PRIORITY LIST OF TARGET DISTANCE TO BE CHECKED AGAINST LIMITS

Step	Measure distance from z axis to z axis and x axis to x axis for these targets	Eliminate this target if distances between z axes of targets and x axes of targets are less than 135 mm and 170 mm, respectively
1	Upper Secondary to Lower Secondary	Upper Secondary.
2	Upper Primary to Upper or Remaining Secondary	Upper or Remaining Secondary.

TABLE 1—PRIORITY LIST OF TARGET DISTANCE TO BE CHECKED AGAINST LIMITS—Continued

Step	Measure distance from z axis to z axis and x axis to x axis for these targets	Eliminate this target if distances between z axes of targets and x axes of targets are less than 135 mm and 170 mm, respectively
3	Lower Primary to Lower or Remaining Secondary	Lower or Remaining Secondary.
4	Upper Primary to Lower Primary	Upper Primary.

S5.2.5.1.2 *Target reconstitution.* If after following the procedure given in S5.2.5.1.1, there are only two targets remaining, determine the absolute distance between the centers of these targets. If this distance is greater than or equal to 360 mm, place a target such that its center bisects a line connecting the centers of the remaining targets.

S5.2.5.2 *Target reorientation—90 degree rotation.* If after following the procedure given in S5.2.5.1 there are less than four targets in a side daylight opening, repeat the procedure in 5.2 through 5.2.5.1.2, with a modification to S5.2 as follows. Reorient the target by rotating it 90 degrees about the y axis of the target such that the target positive z axis is aligned within ±1 degree of the vehicle longitudinal axis, pointing in the direction of the vehicle positive x axis. If after performing the procedure in this section, the remaining targets exceed the number of targets determined with the original orientation of the target, the reoriented targets represent the final target locations for the side daylight opening.

S5.2.5.3 *Target reorientation—incremental rotation.* If after following the procedure given in S5.2.5.2 there are no targets in a side daylight opening, starting with the target in the position defined in S5.2.2.2(a), reorient the target by rotating it in 5 degree increments about the y axis of the target by rotating the target positive z axis toward the vehicle positive x axis. At each increment of rotation, attempt to fit the target within the offset line of the side daylight opening. At the first increment of rotation where the target will fit, place the target center as close as possible to the geometric center of the side daylight opening. If more than one position exists that is closest to the geometric center of the side daylight opening, select the lowest.

S5.3 *Determination of zero displacement plane.* The glazing covering the target location of the side daylight opening being tested is intact and in place in the case of fixed glazing and intact and fully closed in the case of movable glazing. With the ejection impactor targeting point aligned within ±2 mm of the center of any target location specified in S5.2, and with the ejection impactor on the inside of the vehicle, slowly move the impactor towards the window until contact is made with the interior of the glazing with no more than 20 N of pressure being applied to the window. The location of the most outboard surface of the headform establishes the zero displacement plane for this target location.

S5.4 *Window position and condition.*Subject to S5.5(b), prior to impact testing, the glazing covering the target location must be removed from the side daylight opening, fully retracted, or pre-broken according to the procedure in S5.4.1, at the vehicle manufacturer's option.

S5.4.1 *Window glazing pre-breaking procedure.*

S5.4.1.1 *Breakage pattern.* Locate the geometric center of the side daylight opening, established in S5.2.3 of this standard. Mark the outside surface of the window glazing in a horizontal and vertical grid of points separated by 75±2 mm with one point coincident within ±2 mm of the geometric center of the side daylight opening (see Figure 6) (figure provided for illustration purposes). Mark the inside surface of the window glazing in a horizontal and vertical grid of points separated by 75±2 mm with the entire grid horizontally offset by 37.5 ± 2 mm from the grid of points on the outside of the glazing.

S5.4.1.2 *Breakage method.*

(a) Start with the inside surface of the window and forward-most, lowest mark made as specified in S5.4.1.1 of this standard. Use a center punch in this procedure. The punch tip has a 5 ±2 mm diameter prior to coming to a point. The spring is adjusted to require 150 ±25 N of force to activate the punch. Only once at each mark location, apply pressure to activate the spring in the center punch in a direction which is perpendicular to the tangent of the window surface at the point of contact, within ±10 degrees. Apply the pressure only once at each mark location, even if the glazing does not break or no hole results.

(b) Use a 100 ±10 mm x 100 ±10 mm piece of plywood with a minimum thickness of 18 mm as a reaction surface on the opposite side of the glazing to prevent to the extent possible the window surface from deforming by more than 10 mm when pressure is being applied to the hole-punch.

(c) Continue the procedure with the center punch by moving rearward in the grid until the end of a row is reached. When the end of a row is reached, move to the forward-most mark on the next higher row and continue the procedure. Continue in this pattern until the procedure is conducted at each marked location on the inside surface of the glazing.

(d) Repeat the process on the outside surface of the window.

(e) If punching a hole causes the glazing to disintegrate, halt the breakage procedure and proceed with the headform impact test.

S5.5 *Impact speeds and time delays.* The ejection impactor speeds specified below must be achieved after propulsion has ceased.

(a) *Vehicles with or without an ejection mitigation countermeasure that deploys in a rollover.* For a vehicle with an ejection mitigation countermeasure that deploys in a rollover, using the ejection propulsion mechanism, propel the ejection impactor such that it first strikes the countermeasure, while aligned with any target location specified in S5.2 of this standard, 1.5 ±0.1 seconds after activation of the ejection mitigation countermeasure that deploys in the event of a rollover, and at a speed of 20 ±0.5 km/h. For a vehicle without an ejection mitigation countermeasure that deploys in a rollover, propel the ejection impactor at any time such that it first strikes the countermeasure, while aligned with any target location specified in S5.2 of this standard, at a speed of 20 ±0.5 km/h.

(b) *Vehicles with an ejection mitigation countermeasure that deploys in a rollover.* For a vehicle with an ejection mitigation countermeasure that deploys in a rollover, remove or fully retract any movable glazing from the side daylight opening. Using the ejection propulsion mechanism, propel the ejection impactor such that it first strikes the countermeasure, while aligned with any target location specified in S5.2 of this standard, 6.0 ±0.1 seconds after activation of an ejection mitigation countermeasure that deploys in the event of a rollover, and at a speed of 16 ±0.5 km/h.

(c) An ejection mitigation countermeasure that deploys in the event of a rollover is described as such

in the vehicle's owner manual or in other written information provided by the vehicle manufacturer to the consumer.

S5.6 *Ejection impactor orientation.*

S5.6.1 If the targets for the side daylight opening being impacted were determined by the procedure specified in S5.2.2 through S5.2.5.1 only, the ejection impactor orientation is as follows. At the time of launch of the ejection impactor the x, y and z axes of the ejection headform must be aligned within ±1 degree of the vehicle longitudinal, transverse and vertical axes, respectively.

S5.6.2 If the targets for the side daylight opening being impacted were determined by the procedure specified in S5.2.5.2, the ejection impactor orientation is as follows. At the time of launch the ejection impactor is rotated by 90 degrees about the ejection headform y axis, from the orientation specified in S5.6.1, resulting in the headform positive z axis pointing in the direction of the vehicle positive x axis.

S5.6.3 If the targets for the side daylight opening being impacted were determined by the procedure specified in S5.2.5.3, the ejection impactor orientation is as follows. At the time of launch the ejection impactor is rotated about the y axis of the ejection headform by rotating the headform positive z axis towards the vehicle positive x axis, in the increment determined to be necessary in S5.2.5.3 to fit the target within the side daylight opening.

S5.6.4 After any test, extend the ejection impactor to the zero plane and determine that x, y and z axes of the ejection headform remain aligned within ±1 degree of its orientation at launch as specified in S5.6.1—5.6.3.

S6 *General test conditions.*

S6.1 *Vehicle test attitude.* The vehicle is supported off its suspension at an attitude determined in accordance with S6.1(a) through (e).

(a) The vehicle is loaded to its unloaded vehicle weight.

(b) All tires are inflated to the manufacturer's specifications listed on the vehicle's tire placard.

(c) Place vehicle on a level surface.

(c) Pitch: Measure the sill angle of the driver door sill and mark where the angle is measured.

(d) Roll: Mark a point on the vehicle body above the left and right front wheel wells. Determine the vertical height of these two points from the level surface.

(e) Support the vehicle off its suspension such that the driver door sill angle is within ± 1 degree of that measured at the marked area in S6.1(c) and the vertical height difference of the two points marked in S6.1(d) is within ± 5 mm of the vertical height difference determined in S6.1(d).

S6.2 *Doors.*

(a) Except as provided in S6.2(b) or S6.2(c), doors, including any rear hatchback or tailgate, are fully closed and latched but not locked.

(b) During testing, any side door on the opposite side of the longitudinal centerline of the vehicle from the target to be impacted may be open or removed.

(c) During testing, any rear hatchback or tailgate may be open or removed for testing any target.

S6.3 *Steering wheel, steering column, seats, grab handles, and exterior mirrors.* During targeting and testing, the steering wheel, steering column, seats, grab handles and exterior mirrors may be removed from the vehicle or adjusted to facilitate testing and/or provide an unobstructed path for headform travel through and beyond the vehicle.

S6.4 *Other vehicle components and structures.* During targeting and testing, interior vehicle components and vehicle structures other than specified in S6.2 and S6.3 may be removed or adjusted to the extent necessary to allow positioning of the ejection propulsion mechanism and provide an unobstructed path for the headform travel through and beyond the vehicle.

S6.5 *Temperature and humidity.*

(a) During testing, the ambient temperature is between 18 degrees C. and 29 degrees C., at any relative humidity between 10 percent and 70 percent.

(b) The headform specified in S7.1.1 of this standard is exposed to the conditions specified in S6.5(a) for a continuous period not less than one hour, prior to the test.

S7. *Ejection mitigation test device specifications.* The ejection mitigation test device consists of an ejection impactor and ejection propulsion mechanism with the following specifications. The ability of a test device to meet these specifications may be determined outside of the vehicle.

S7.1 *Ejection impactor.* The ejection impactor consists of an ejection headform attached to a shaft. The ejection impactor has a mass of 18 kg ±0.05 kg. The shaft is parallel to the y axis of the headform.

S7.1.1 *Ejection headform dimensions.* The ejection headform has the dimensions shown in Figure 1 and is depicted in the "Parts List; Ejection Mitigation Headform Drawing Package," December 2010, and the "Parts List and Drawings; Ejection Mitigation Headform Drawing Package," December 2010 (incorporated by reference; see § 571.5).

S7.2 *Static deflection.* The ejection impactor targeting point must not deflect more than 20 mm in the x-z plane when a 981 N ± 5 N force is applied in a vehicle vertical longitudinal plane, through the y axis of the headform and no more than 5 mm rear of the posterior surface of the headform. The force is applied once in each of the following headform axes: +z, −z, +x, −x. The static deflection measurement is made with the ejection impactor extended 400 mm outboard of the theoretical point of impact with the countermeasure and attached to the ejection propulsion mechanism, including any support frame and anchors.

S7.3 *Frictional characteristics.*

(a) Measure the dynamic coefficient of friction of the ejection impactor and any associated bearings and bearing housing in a test ready orientation. Repeat the measurement in three more orientations with the ejection impactor and any associated bearings and bearing housing rotated 90, 180 and 270 degrees about the headform y axis. Perform the measurement five consecutive times at each orientation.

(b) Measure the average force necessary to move the ejection impactor 200 mm rearward into the ejection propulsion mechanism at a rate of 50 (±13) mm per second, starting at a point 400 mm outboard of the theoretical point of impact with the countermeasure. Measure the force to an accuracy of ±5 N. The measurement excludes the force measured over the first 25 mm of travel and is recorded at a minimum frequency of 100 Hz. During the test a 100 kg ± 0.5 kg mass is attached to the impactor with its center of gravity passing through the axis of motion of the impactor and no more than 5 mm rear of the posterior surface of the headform.

(c) Take the five force level averages made at each impactor orientation in S7.3(a) and average them. Take the maximum of the force average values and divide by 9.81 times the combined mass of the ejection impactor and mass added in S7.3(b). The resulting value must not exceed 0.25.

S7.4 *Targeting accuracy.* Determine the distance "D" along the axis of travel of the ejection impactor from its launch point to the theoretical point of impact with the countermeasure, when moving at the speed specified in S5.5. Determine that the ejection mitigation test device can deliver the ejection impactor targeting point to within ±10 mm of an axis normal to and passing through the target center, as the unobstructed impactor passes through a zone defined by vertical longitudinal

planes 50 mm forward and rearward of "D."

S8 *Phase-in Schedule for Vehicle Certification.*

S8.1 *Vehicles manufactured on or after September 1, 2013 and before September 1, 2016.* At anytime during the production years ending August 31, 2014, August 31, 2015, and August 31, 2016, each manufacturer shall, upon request from the Office of Vehicle Safety Compliance, provide information identifying the vehicles (by make, model and vehicle identification number) that have been certified as complying with this standard. The manufacturer's designation of a vehicle as a certified vehicle is irrevocable.

S8.2 *Vehicles manufactured on or after September 1, 2013 and before September 1, 2014.* Subject to S8.9, for vehicles manufactured on or after September 1, 2013 and before September 1, 2014, the number of vehicles complying with S4.2 shall be not less than 25 percent of:

(a) The manufacturer's average annual production of vehicles manufactured in the three previous production years; or

(b) The manufacturer's production in the current production year.

S8.4 *Vehicles manufactured on or after September 1, 2015 and before September 1, 2016.* Subject to S8.9, for vehicles manufactured on or after September 1, 2015 and before September 1, 2016, the number of vehicles complying with S4.2 shall be not less than 75 percent of:

(a) The manufacturer's average annual production of vehicles manufactured in the three previous production years; or

(b) The manufacturer's production in the current production year.

S8.5 *Vehicles manufactured on or after September 1, 2016 and before September 1, 2017.* Subject to S8.9, for vehicles manufactured on or after September 1, 2016 and before September 1, 2017, the number of vehicles complying with S4.2 shall be not less than 100 percent of the manufacturer's production in the current production year.

8.6 *Vehicles produced by more than one manufacturer.* For the purpose of calculating average annual production of vehicles for each manufacturer and the number of vehicles manufactured by each manufacturer under S8.1 through S8.4, a vehicle produced by more than one manufacturer shall be attributed to a single manufacturer as follows, subject to S8.7.

(a) A vehicle that is imported shall be attributed to the importer.

(b) A vehicle manufactured in the United States by more than one manufacturer, one of which also markets the vehicle, shall be attributed to the manufacturer that markets the vehicle.

S8.7 A vehicle produced by more than one manufacturer shall be attributed to any one of the vehicle's manufacturers specified by an express written contract, reported to the National Highway Traffic Safety Administration under 49 CFR part 585, between the manufacturer so specified and the manufacturer to which the vehicle would otherwise be attributed under S8.5.

S8.8 For the purposes of calculating average annual production of vehicles for each manufacturer and the number of vehicles manufactured by each manufacturer under S8, do not count any vehicle that is excluded by this standard from the requirements.

S8.9 Calculation of complying vehicles.

(a) For the purposes of calculating the vehicles complying with S8.2, a manufacturer may count a vehicle if it is manufactured on or after March 1, 2011 but before September 1, 2014.

(b) For purposes of complying with S8.3, a manufacturer may count a vehicle if it—

(1) Is manufactured on or after March 1, 2011 but before September 1, 2015 and,

(2) Is not counted toward compliance with S8.2.

(c) For purposes of complying with S8.4, a manufacturer may count a vehicle if it—

(1) Is manufactured on or after March 1, 2011 but before September 1, 2016 and,

(2) Is not counted toward compliance with S8.2 or S8.3.

(d) For purposes of complying with S8.5, a manufacturer may count a vehicle if it—

(1) Is manufactured on or after March 1, 2011 but before September 1, 2017 and,

(2) Is not counted toward compliance with S8.2, S8.3, or S8.4.

(e) For the purposes of calculating average annual production of vehicles for each manufacturer and the number of vehicles manufactured by each manufacturer, each vehicle that is excluded from having to meet this standard is not counted.

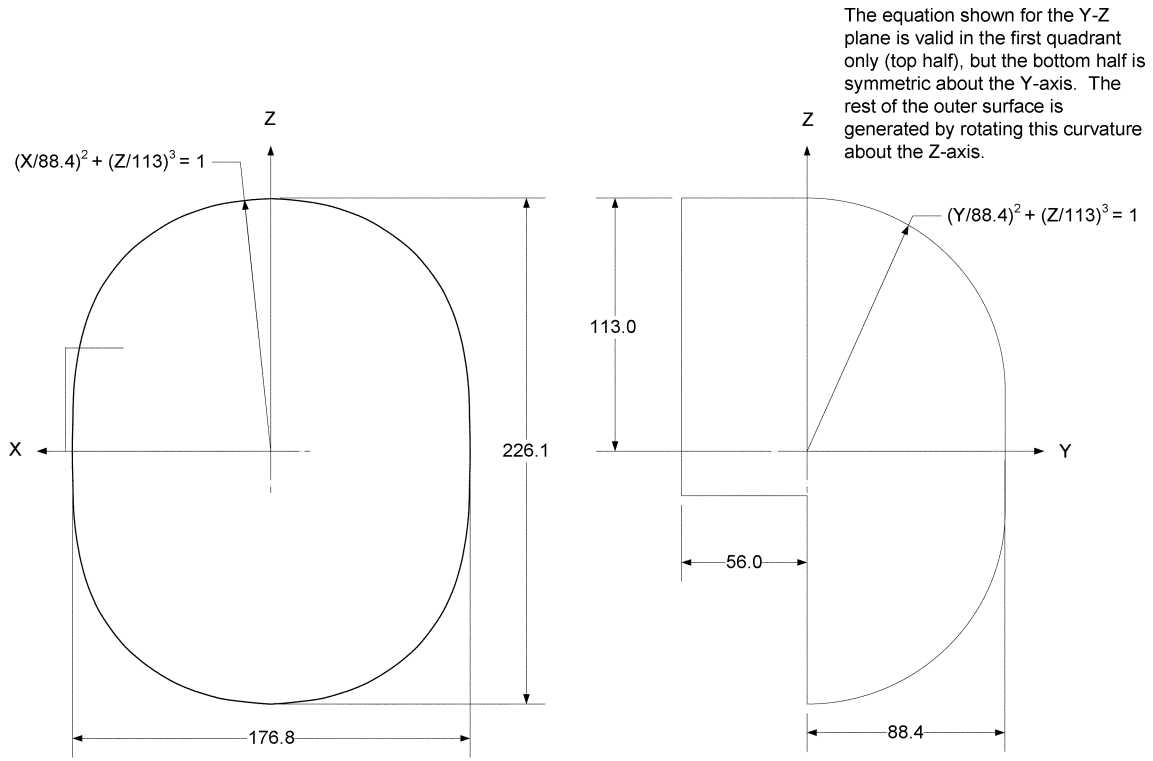

Figure 1 – Ejection Headform Face. All dimensions are millimeters.

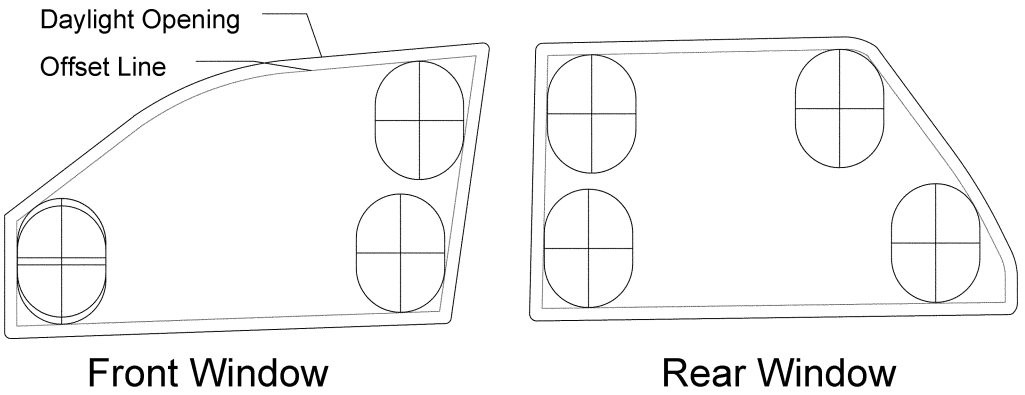

Figure 2

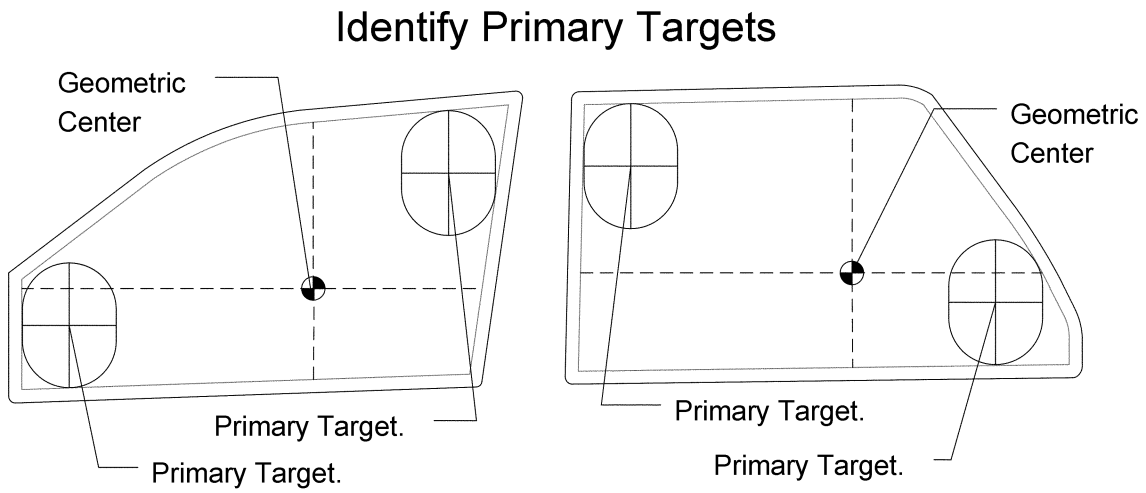

Figure 3

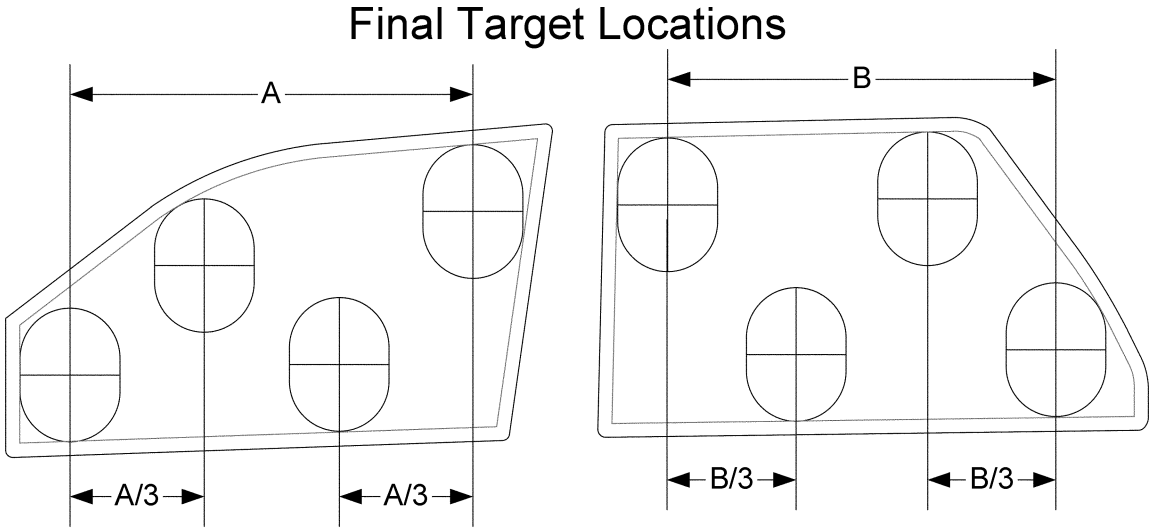

Figure 4

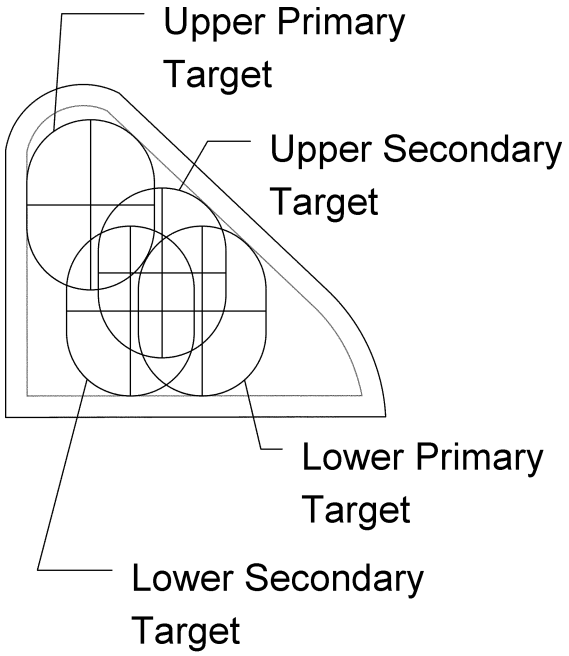

Figure 5

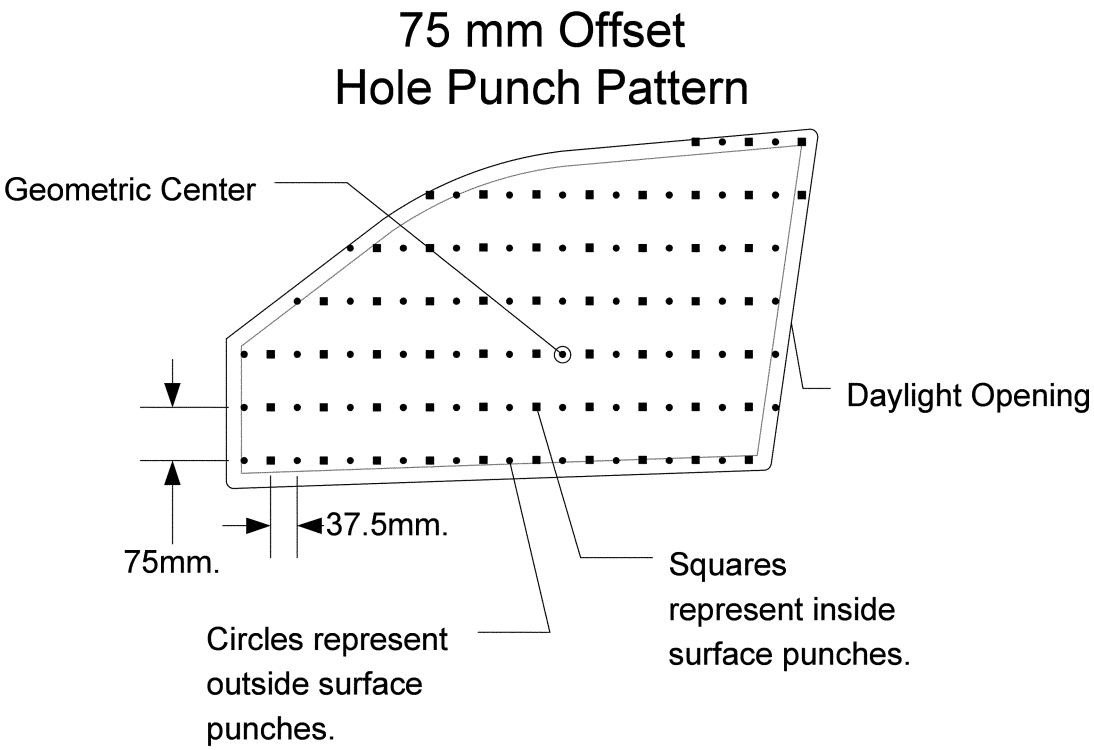

Figure 6

■ 4. The authority citation for part 585 continues to read as follows:

Authority: 49 U.S.C. 322, 30111, 30115, 30117, and 30166; delegation of authority at 49 CFR 1.50.

■ 5. Part 585 is amended by adding Subpart K to read as follows:

PART 585—PHASE-IN REPORTING REQUIREMENTS

* * * * *

Subpart K—Ejection Mitigation Phase-in Reporting Requirements

585.100 Scope.
585.101 Purpose.
585.102 Applicability.
585.103 Definitions.
585.104 Response to inquiries.
585.105 Reporting requirements.
585.106 Records.

Subpart K—Ejection Mitigation Phase-in Reporting Requirements

§ 585.100 Scope.

This part establishes requirements for manufacturers of passenger cars, and of trucks, buses and multipurpose passenger vehicles with a gross vehicle weight rating (GVWR) of 4,536 kilograms (kg) (10,000 pounds (lb)) or less, to submit a report, and maintain records related to the report, concerning the number of such vehicles that meet the ejection mitigation requirements of Standard No. 226, *Ejection Mitigation* (49 CFR 571.226).

§ 585.101 Purpose.

The purpose of these reporting requirements is to assist the National Highway Traffic Safety Administration in determining whether a manufacturer has complied with the requirements of Standard No. 226, *Ejection Mitigation* (49 CFR 571.226).

§ 585.102 Applicability.

This part applies to manufacturers of passenger cars, and of trucks, buses and multipurpose passenger vehicles with a GVWR of 4,536 kg (10,000 lb) or less. However, this subpart does not apply to vehicles excluded by Standard No. 226 (49 CFR 571.226) from the requirements of that standard. This subpart does not apply to manufacturers whose production consists exclusively of vehicles manufactured in two or more stages, to manufacturers whose production of motor vehicles for the United States market is less than 5,000 vehicles in a production year, and to limited line manufacturers.

§ 585.103 Definitions.

(a) All terms defined in 49 U.S.C. 30102 are used in their statutory meaning.

(b) *Bus, gross vehicle weight rating* or *GVWR, multipurpose passenger vehicle, passenger car,* and *truck* are used as defined in § 571.3 of this chapter.

(c) *Production year* means the 12-month period between September 1 of one year and August 31 of the following year, inclusive.

(d) *Limited line manufacturer* means a manufacturer that sells three or fewer carlines, as that term is defined in 49 CFR 583.4, in the United States during a production year.

§ 585.104 Response to inquiries.

At anytime during the production years ending August 31, 2014, August 31, 2015, August 31, 2016, and August 31, 2017, each manufacturer shall, upon request from the Office of Vehicle Safety Compliance, provide information identifying the vehicles (by make, model and vehicle identification number) that have been certified as complying with the ejection mitigation requirements of Standard No. 226, *Ejection mitigation* (49 CFR 571.226). The manufacturer's designation of a vehicle as a certified vehicle is irrevocable.

§ 585.105 Reporting requirements.

(a) *Advanced credit phase-in reporting requirements.* (1) Within 60 days after the end of the production years ending August 31, 2011, through August 31, 2017, each manufacturer certifying vehicles manufactured during any of those production years as complying with the ejection mitigation requirements of Standard No. 226 (49 CFR 571.226) shall submit a report to the National Highway Traffic Safety Administration providing the information specified in paragraph (c) of this section and in § 585.2 of this part.

(b) *Phase-in reporting requirements.* Within 60 days after the end of each of the production years ending August 31, 2014, through August 31, 2017, each manufacturer shall submit a report to the National Highway Traffic Safety Administration concerning its compliance with the ejection mitigation requirements of Standard No. 226 (49 CFR 571.226) for its vehicles produced in that year. Each report shall provide the information specified in paragraph (d) of this section and in § 585.2 of this part.

(c) *Advanced credit phase-in report content*—(1) *Production of complying vehicles.* With respect to the reports identified in § 585.105(a), each manufacturer shall report for the production year for which the report is filed the number of vehicles, by make and model year, that are certified as meeting the ejection mitigation requirements of Standard No. 226 (49 CFR 571.226).

(d) *Phase-in report content*—

(1) *Basis for phase-in production goals.* Each manufacturer shall provide the number of passenger cars, multipurpose passenger vehicles, trucks, and buses, with a gross vehicle weight rating of 4,536 kilograms (10,000 pounds) or less, manufactured in the current production year, or, at the manufacturer's option, in each of the three previous production years. A new manufacturer that is, for the first time, manufacturing these vehicles for sale in the United States must report the number of these vehicles manufactured during the current production year.

(2) *Production of complying vehicles.* Each manufacturer shall report for the production year being reported on information on the number of passenger cars, multipurpose passenger vehicles, trucks, and buses, with a gross vehicle weight rating of 4,536 kilograms (10,000 pounds) or less that meet the ejection mitigation requirements of Standard No. 226 (49 CFR 571.226). The manufacturer shall report the vehicles produced during the preceding years for which the manufacturer is claiming credits as having been produced during the production year being reported on.

§ 585.106 Records.

Each manufacturer shall maintain records of the Vehicle Identification Number for each vehicle for which information is reported under § 585.105 until December 31, 2020.

Issued on January 5, 2011.

David L. Strickland,

Administrator.

[FR Doc. 2011–547 Filed 1–13–11; 8:45 am]

BILLING CODE 4910–59–P