Federal Register

11–8–10 Monday
Vol. 75 No. 215 Nov. 8, 2010

Pages 68405–68674

The **FEDERAL REGISTER** (ISSN 0097–6326) is published daily, Monday through Friday, except official holidays, by the Office of the Federal Register, National Archives and Records Administration, Washington, DC 20408, under the Federal Register Act (44 U.S.C. Ch. 15) and the regulations of the Administrative Committee of the Federal Register (1 CFR Ch. I). The Superintendent of Documents, U.S. Government Printing Office, Washington, DC 20402 is the exclusive distributor of the official edition. Periodicals postage is paid at Washington, DC.

The **FEDERAL REGISTER** provides a uniform system for making available to the public regulations and legal notices issued by Federal agencies. These include Presidential proclamations and Executive Orders, Federal agency documents having general applicability and legal effect, documents required to be published by act of Congress, and other Federal agency documents of public interest.

Documents are on file for public inspection in the Office of the Federal Register the day before they are published, unless the issuing agency requests earlier filing. For a list of documents currently on file for public inspection, see *www.federalregister.gov.*

The seal of the National Archives and Records Administration authenticates the Federal Register as the official serial publication established under the Federal Register Act. Under 44 U.S.C. 1507, the contents of the **Federal Register** shall be judicially noticed.

The **Federal Register** is published in paper and on 24x microfiche. It is also available online at no charge as one of the databases on GPO Access, a service of the U.S. Government Printing Office.

The online edition of the **Federal Register**, *www.gpoaccess.gov/nara,* available through GPO Access, is issued under the authority of the Administrative Committee of the Federal Register as the official legal equivalent of the paper and microfiche editions (44 U.S.C. 4101 and 1 CFR 5.10). It is updated by 6 a.m. each day the **Federal Register** is published and includes both text and graphics from Volume 59, Number 1 (January 2, 1994) forward.

For more information about GPO Access, contact the GPO Access User Support Team, call toll free 1-888-293-6498; DC area 202-512-1530; fax at 202-512-1262; or via e-mail at *gpoaccess@gpo.gov.* The Support Team is available between 7:00 a.m. and 9:00 p.m. Eastern Time, Monday–Friday, except official holidays.

The annual subscription price for the **Federal Register** paper edition is $749 plus postage, or $808, plus postage, for a combined **Federal Register, Federal Register** Index and List of CFR Sections Affected (LSA) subscription; the microfiche edition of the **Federal Register** including the **Federal Register** Index and LSA is $165, plus postage. Six month subscriptions are available for one-half the annual rate. The prevailing postal rates will be applied to orders according to the delivery method requested. The price of a single copy of the daily **Federal Register,** including postage, is based on the number of pages: $11 for an issue containing less than 200 pages; $22 for an issue containing 200 to 400 pages; and $33 for an issue containing more than 400 pages. Single issues of the microfiche edition may be purchased for $3 per copy, including postage. Remit check or money order, made payable to the Superintendent of Documents, or charge to your GPO Deposit Account, VISA, MasterCard, American Express, or Discover. Mail to: U.S. Government Printing Office—New Orders, P.O. Box 979050, St. Louis, MO 63197-9000; or call toll free 1-866-512-1800, DC area 202-512-1800; or go to the U.S. Government Online Bookstore site, see *bookstore.gpo.gov.*

There are no restrictions on the republication of material appearing in the **Federal Register.**

How To Cite This Publication: Use the volume number and the page number. Example: 75 FR 12345.

Postmaster: Send address changes to the Superintendent of Documents, Federal Register, U.S. Government Printing Office, Washington, DC 20402, along with the entire mailing label from the last issue received.

SUBSCRIPTIONS AND COPIES

PUBLIC

Subscriptions:

Paper or fiche	**202–512–1800**
Assistance with public subscriptions	**202–512–1806**

General online information **202–512–1530; 1–888–293–6498**

Single copies/back copies:

Paper or fiche	**202–512–1800**
Assistance with public single copies	**1–866–512–1800 (Toll-Free)**

FEDERAL AGENCIES

Subscriptions:

Paper or fiche	**202–741–6005**
Assistance with Federal agency subscriptions	**202–741–6005**

FEDERAL REGISTER WORKSHOP

THE FEDERAL REGISTER: WHAT IT IS AND HOW TO USE IT

FOR: Any person who uses the Federal Register and Code of Federal Regulations.

WHO: Sponsored by the Office of the Federal Register.

WHAT: Free public briefings (approximately 3 hours) to present:

1. The regulatory process, with a focus on the Federal Register system and the public's role in the development of regulations.
2. The relationship between the Federal Register and Code of Federal Regulations.
3. The important elements of typical Federal Register documents.
4. An introduction to the finding aids of the FR/CFR system.

WHY: To provide the public with access to information necessary to research Federal agency regulations which directly affect them. There will be no discussion of specific agency regulations.

WHEN: Tuesday, November 9, 2010
9 a.m.–12:30 p.m.

WHERE: Office of the Federal Register
Conference Room, Suite 700
800 North Capitol Street, NW.
Washington, DC 20002

RESERVATIONS: (202) 741–6008

Printed on recycled paper.

Contents

Federal Register

Vol. 75, No. 215

Monday, November 8, 2010

Agricultural Marketing Service
PROPOSED RULES
National Organic Program:
Amendments to the National List of Allowed and Prohibited Substances (Crops and Processing), 68505–68510
Proposed Christmas Tree Promotion, Research, and Information Order, 68512–68529
Proposed Christmas Tree Promotion, Research, and Information Order; Referendum Procedures, 68529–68533
Termination of Marketing Order:
Fresh Prunes Grown in Designated Counties in Washington and in Umatilla County, Oregon, 68510–68512

Agriculture Department
See Agricultural Marketing Service
NOTICES
Agency Information Collection Activities; Proposals, Submissions, and Approvals, 68596–68598
Appointment of Members to the National Agricultural Research, Extension, Education, and Economics Advisory Board, 68598–68599
Solicitation for Membership:
Forest Research Advisory Council, 68599–68600

Army Department
See Engineers Corps

Centers for Medicare & Medicaid Services
PROPOSED RULES
Medicaid:
Federal Funding for Medicaid Eligibility Determination and Enrollment Activities, 68583–68595

Children and Families Administration
NOTICES
Agency Information Collection Activities; Proposals, Submissions, and Approvals, 68610

Coast Guard
PROPOSED RULES
Port Access Route Study; Bering Strait, 68568–68570

Commerce Department
See Foreign-Trade Zones Board
See National Oceanic and Atmospheric Administration
NOTICES
Secretarial India High Technology Business Development Mission, 68600–68603

Defense Department
See Engineers Corps
NOTICES
Agency Information Collection Activities; Proposals, Submissions, and Approvals:
Request for Authorization of Additional Classification and Rate, 68608–68609

Education Department
NOTICES
Agency Information Collection Activities; Proposals, Submissions, and Approvals, 68606–68607

Employment and Training Administration
NOTICES
Determinations Regarding Eligibility to Apply for Worker Adjustment Assistance, 68621–68623
Investigations Regarding Certifications of Eligibility to Apply for Worker Adjustment Assistance, 68623–68624

Energy Department
See Federal Energy Regulatory Commission

Engineers Corps
NOTICES
Availability of Documents:
Chetco River Gravel Mining Executive and Technical Teams, 68606

Environmental Protection Agency
RULES
Approval and Promulgation of Implementation Plans:
Albuquerque/Bernalillo County, NM, Interstate Transportation of Pollution, 68447–68448
Revisions to In-Use Testing for Heavy-Duty Diesel Engines and Vehicles:
Emissions Measurement and Instrumentation; Not-to-Exceed Emission Standards; etc., 68448–68467
PROPOSED RULES
Approval and Disapproval and Promulgation of Air Quality Implementation Plans:
Colorado; Revision to Definitions; Construction Permit Program; Regulation Three, 68570–68575
Revisions to In-Use Testing for Heavy-Duty Diesel Engines and Vehicles:
Emissions Measurement and Instrumentation; Not-to-Exceed Emission Standards; etc., 68575–68582

Executive Office of the President
See Presidential Documents

Farm Credit Administration
PROPOSED RULES
Funding and Fiscal Affairs, Loan Policies and Operations, and Funding Operations:
Capital Adequacy; Capital Components; Basel Accord Tier One and Tier Two, 68533–68534

Federal Aviation Administration
RULES
Amendment of Class E Airspace:
Kennett; MO, 68415
Establishment of Class E Airspace:
Berryville, AR, 68416
PROPOSED RULES
Airworthiness Directives:
Airbus Model A318, A319, A320, and A321 Series Airplanes, 68548–68551
Cessna Aircraft Co. Models 150, 152, 170, 172, 175, 177, 180, 182, 185, 188, 190, 195, 206, 207, 210, T303, 336, and 337 Airplanes, 68543–68548

Amendment of Class E Airspace:
Greensburg, IN, 68551–68552
La Porte, IN, 68556–68557
Lafayette, Purdue University Airport, IN, 68554–68555
Muncie, IN, 68552–68553
Richmond, IN, 68555–68556
Establishment of Class E Airspace:
Martinsville, IN, 68557–68558
New Hampton, IA, 68558–68559
NOTICES
Petitions for Exemptions; Summary of Petition Received, 68666–68667
Receipt of Noise Compatibility Program and Request for Review:
Kona International Airport at Keahole, Keahole, North Kona, HI, 68667–68668

Federal Emergency Management Agency
NOTICES
Agency Information Collection Activities; Proposals, Submissions, and Approvals:
Approval and Coordination of Requirements to Use the NETC Extracurricular for Training Activities, 68614
Effectiveness of Community Implementation of the NFIP Community Assistance Program, 68613–68614

Federal Energy Regulatory Commission
NOTICES
Baseline Filings:
CenterPoint Energy; Illinois Gas Transmission Co., 68607
Temporary Waivers:
BP Canada Energy Marketing Corp. and Apache Corp., 68607–68608

Federal Highway Administration
RULES
Real-Time System Management Information Program, 68418–68429
NOTICES
Environmental Impact Statements; Availability, etc.:
St. Louis County, MO, 68662–68663

Federal Housing Finance Agency
PROPOSED RULES
Federal Home Loan Bank Liabilities, 68534–68543

Federal Housing Finance Board
PROPOSED RULES
Federal Home Loan Bank Liabilities, 68534–68543

Federal Reserve System
NOTICES
Formations of, Acquisitions by, and Mergers of Bank Holding Companies, 68608

Federal Trade Commission
RULES
Administrative Wage Garnishment, 68416–68418
PROPOSED RULES
Disclosure Requirements and Prohibitions Concerning Business Opportunities, 68559–68560

Foreign-Trade Zones Board
NOTICES
Expansion of Foreign-Trade Zone 70; Detroit, MI, 68604
Reorganizations Under Alternative Site Framework:
Foreign-Trade Zone 125, South Bend, IN, 68605–68606
Foreign-Trade Zone 177, Mount Vernon/Evansville, IN, 68605

General Services Administration
NOTICES
Agency Information Collection Activities; Proposals, Submissions, and Approvals:
Request for Authorization of Additional Classification and Rate, 68608–68609

Health and Human Services Department
See Centers for Medicare & Medicaid Services
See Children and Families Administration
See Health Resources and Services Administration
See National Institutes of Health
NOTICES
Agency Information Collection Activities; Proposals, Submissions, and Approvals, 68609–68610

Health Resources and Services Administration
NOTICES
Agency Information Collection Activities; Proposals, Submissions, and Approvals, 68610–68611
Part C Early Intervention Services Grant, 68613

Homeland Security Department
See Coast Guard
See Federal Emergency Management Agency

Housing and Urban Development Department
NOTICES
Agency Information Collection Activities; Proposals, Submissions, and Approvals:
Consolidated Public Housing Certification of Completion, 68614–68615
Public Housing Capital Fund Financing, 68615–68616
Operating Cost Adjustment Factors for 2011, 68616–68618

Indian Affairs Bureau
NOTICES
Indian Gaming, 68618

Interior Department
See Indian Affairs Bureau
See Land Management Bureau

International Trade Commission
NOTICES
Determinations:
Diamond Sawblades and Parts Thereof from China and Korea, 68618–68619
Investigations:
Certain Wireless Communications Devices, Portable Music and Data Processing Devices, Computers and Components Thereof, 68619–68620

Justice Department
NOTICES
Lodging of Proposed Consent Decrees Under the Clean Water Act:
United States of America, et al. v. Bristol Township, 68620
Lodging of Proposed Consent Decrees:
United States v. Century Homebuilders, LLC, 68620–68621

Labor Department
See Employment and Training Administration
See Occupational Safety and Health Administration

Land Management Bureau
NOTICES
Meetings:
Central Montana Resource Advisory Council, 68618

Maritime Administration
NOTICES
Buy America Waiver, 68661–68662

National Aeronautics and Space Administration
NOTICES
Agency Information Collection Activities; Proposals, Submissions, and Approvals:
Request for Authorization of Additional Classification and Rate, 68608–68609

National Highway Traffic Safety Administration
NOTICES
Federal Motor Vehicle Safety Standards:
Child Restraint Systems; Booster Seat Effectiveness Estimates Based on CDS and State Data, 68664–68666
Technical Report on the Effectiveness of Underride Guards for Heavy Trailers, 68663–68664

National Institutes of Health
NOTICES
Meetings:
Center for Scientific Review, 68611–68612
Eunice Kennedy Shriver National Institute of Child Health and Human Development, 68612
National Cancer Institute, 68611
National Institute of Mental Health, 68612–68613

National Oceanic and Atmospheric Administration
RULES
List of Fisheries for 2011, 68468–68504
NOTICES
Agency Information Collection Activities; Proposals, Submissions, and Approvals:
Office of Education Dr. Nancy Foster Scholarship Program, 68603–68604
National Saltwater Angler Registry Program Designation of Exempted States, 68604
Permits:
Marine Mammals; File No. 15483, 68605

Nuclear Regulatory Commission
NOTICES
Applications:
PSEG Power LLC, PSEG Nuclear LLC; Hearing and Opportunity to Petition for Leave to Intervene, 68624–68629
Issuance of Renewed Facility Operating License:
Massachusetts Institute of Technology Reactor, 68629–68630
Meetings; Sunshine Act, 68630

Occupational Safety and Health Administration
RULES
Cranes and Derricks in Construction; Approval of Information Collection Requirements, 68429–68430

Peace Corps
NOTICES
Agency Information Collection Activities; Proposals, Submissions, and Approvals, 68630–68631

Postal Service
RULES
Domestic Shipping Services Pricing and Mailing Standards Changes, 68430–68447

Presidential Documents
ADMINISTRATIVE ORDERS
Colombia; Continuation of Drug Interdiction Assistance (Presidential Determination):
No. 2010–11 of August 10
Correction, 68405
Kyrgyzstan; Unexpected Urgent Refugee and Migration Needs Resulting from Violence (Presidential Determination):
No. 2010–12 of August 26
Correction, 68407
Pakistan; Unexpected Urgent Refugee and Migration Needs Resulting from Flooding (Presidential Determination):
No. 2010–14 of September 3
Correction, 68409
Trafficking in Persons; Foreign Governments' Efforts Regarding (Presidential Determination):
No. 2010–15 of September 10
Correction, 68411
Narcotics and Drugs; Major Illicit Transit or Producing Countries (Presidential Determination):
No. 2010–16 of September 15
Correction, 68413

Railroad Retirement Board
NOTICES
Meetings; Sunshine Act, 68631

Securities and Exchange Commission
PROPOSED RULES
Prohibition Against Fraud, Manipulation, and Deception in Connection with Security-Based Swaps, 68560–68568
NOTICES
Agency Information Collection Activities; Proposals, Submissions, and Approvals, 68631–68632
Allocation of Regulatory Responsibilities:
BATS Exchange, Inc., BATS Y-Exchange, Inc., et al, 68632–68636
Order Of Suspension Of Trading:
8000, Inc, 68636
President's Working Group Report on Money Market Fund Reform, 68636–68654
Self-Regulatory Organizations; Proposed Rule Changes:
EDGA Exchange, Inc., 68659–68660
EDGX Exchange, Inc., 68660–68661
Financial Industry Regulatory Authority, Inc., 68654–68656
New York Stock Exchange LLC, 68656–68657
NYSE Amex LLC, 68657–68658

Transportation Department
See Federal Aviation Administration
See Federal Highway Administration
See Maritime Administration
See National Highway Traffic Safety Administration
RULES
Transportation for Individuals with Disabilities:
Passenger Vessels; Change in Effective Date, 68467–68468

Treasury Department
NOTICES
Senior Executive Service; Departmental Performance Review Board, 68668–68669

Veterans Affairs Department
NOTICES
Loan Guaranty:
Assistance to Eligible Individuals in Acquiring Specially Adapted Housing; Cost-of-Construction Index, 68669

Reader Aids

Consult the Reader Aids section at the end of this page for phone numbers, online resources, finding aids, reminders, and notice of recently enacted public laws.

To subscribe to the Federal Register Table of Contents LISTSERV electronic mailing list, go to http://listserv.access.gpo.gov and select Online mailing list archives, FEDREGTOC-L, Join or leave the list (or change settings); then follow the instructions.

CFR PARTS AFFECTED IN THIS ISSUE

A cumulative list of the parts affected this month can be found in the Reader Aids section at the end of this issue.

3 CFR

Administrative Orders:

Notices:

Notice of November 4, 2010 68673

Presidential Determinations:

No. 2010-11 of August 10, 2010 (correction) 68405

No. 2010-12 of August 26, 2010 (correction) 68407

No. 2010-14 of September 3, 2010 (correction) 68409

No. 2010-15 of September 10, 2010 (correction) 68411

No. 2010-16 of September 15, 2010 (correction) 68413

7 CFR

Proposed Rules:

205 68505

924 68510

1214 (2 documents) 68512, 68529

12 CFR

Proposed Rules:

615 68533

965 68534

966 68534

969 68534

987 68534

1270 68534

14 CFR

71 (2 documents) 68415, 68416

Proposed Rules:

39 (2 documents) 68543, 68548

71 (7 documents) 68551, 68552, 68554, 68555, 68556, 68557, 68558

16 CFR

1 68416

Proposed Rules:

437 68559

17 CFR

Proposed Rules:

240 68560

23 CFR

511 68418

29 CFR

1926 68429

33 CFR

Proposed Rules:

167 68568

39 CFR

111 68430

40 CFR

52 68447

86 68448

1033 68448

1039 68448

1042 68448

1045 68448

1054 68448

1065 68448

Proposed Rules:

52 68570

86 68575

1033 68575

1039 68575

1042 68575

1045 68575

1054 68575

1065 68575

42 CFR

Proposed Rules:

433 68583

49 CFR

39 68467

50 CFR

229 68468

Federal Register
Vol. 75, No. 215
Monday, November 8, 2010

Presidential Documents

Title 3—

The President

Presidential Determination No. 2010–11 of August 10, 2010—Continuation of U.S. Drug Interdiction Assistance to the Government of Colombia

Correction

In Presidential document 2010–27668 beginning on page 67011 in the issue of Monday, November 1, 2010, make the following correction:

On page 67011, the Presidential Determination number should read "2010–11"

[FR Doc. C1–2010–27668
Filed 11–5–10; 8:45 am]
Billing Code 1505–01–D

Presidential Documents

Presidential Determination No. 2010–12 of August 26, 2010—Unexpected Urgent Refugee and Migration Needs Resulting from Violence in Kyrgyzstan

Correction

In Presidential document 2010–27672 beginning on page 67013 in the issue of Monday, November 1, 2010, make the following correction:

On page 67013, the Presidential Determination number should read "2010–12"

[FR Doc. C1–2010–27672
Filed 11–5–10; 8:45 am]
Billing Code 1505–01–D

Presidential Documents

Presidential Determination No. 2010–14 of September 3, 2010—Unexpected Urgent Refugee And Migration Needs Resulting From Flooding In Pakistan

Correction

In Presidential document 2010–27673 beginning on page 67015 in the issue of Monday, November 1, 2010, make the following correction:

On page 67015, the Presidential Determination number should read "2010–14"

[FR Doc. C1–2010–27673
Filed 11–5–10; 8:45 am]
Billing Code 1505–01–D

Presidential Documents

Presidential Determination No. 2010–15 of September 10, 2010—Presidential Determination with Respect to Foreign Governments' Efforts Regarding Trafficking in Persons

Correction

In Presidential document 2010–27674 beginning on page 67017 in the issue of Monday, November 1, 2010, make the following correction:

On page 67017, the Presidential Determination number should read "2010–15"

[FR Doc. C1–2010–27674
Filed 11–5–10; 8:45 am]
Billing Code 1505–01–D

Presidential Documents

Presidential Determination No. 2010–16 of September 15, 2010—Presidential Determination on Major Illicit Drug Transit or Major Illicit Drug Producing Countries for Fiscal Year 2011

Correction

In Presidential document 2010-27676 beginning on page 67019 in the issue of Monday, November 1, 2010, make the following correction:

On page 67019, the Presidential Determination number should read "2010–16"

[FR Doc. C1–2010–27676
Filed 11–5–10; 8:45 am]
Billing Code 1505–01–D

Rules and Regulations

Federal Register

Vol. 75, No. 215

Monday, November 8, 2010

This section of the FEDERAL REGISTER contains regulatory documents having general applicability and legal effect, most of which are keyed to and codified in the Code of Federal Regulations, which is published under 50 titles pursuant to 44 U.S.C. 1510.

The Code of Federal Regulations is sold by the Superintendent of Documents. Prices of new books are listed in the first FEDERAL REGISTER issue of each week.

DEPARTMENT OF TRANSPORTATION

Federal Aviation Administration

14 CFR Part 71

[Docket No. FAA–2010–0606; Airspace Docket No. 10–ACE–8]

Amendment of Class E Airspace; Kennett, MO

AGENCY: Federal Aviation Administration (FAA), DOT.

ACTION: Final rule.

SUMMARY: This action amends Class E airspace for Kennett, MO. Decommissioning of the Kennett non-directional beacon (NDB) at Kennett Memorial Airport, Kennett, MO, has made this action necessary to enhance the safety and management of Instrument Flight Rule (IFR) operations at the airport.

DATES: Effective date 0901 UTC, January 13, 2011. The Director of the Federal Register approves this incorporation by reference action under 1 CFR part 51, subject to the annual revision of FAA Order 7400.9 and publication of conforming amendments.

FOR FURTHER INFORMATION CONTACT: Scott Enander, Central Service Center, Operations Support Group, Federal Aviation Administration, Southwest Region, 2601 Meacham Blvd., Fort Worth, TX 76137; telephone (817) 321–7716.

SUPPLEMENTARY INFORMATION:

History

On August 18, 2010, the FAA published in the **Federal Register** a notice of proposed rulemaking to amend Class E airspace for Kennett, MO, reconfiguring controlled airspace at Kennett Memorial Airport (75 FR 50948) Docket No. FAA–2010–0606. Interested parties were invited to participate in this rulemaking effort by submitting written comments on the proposal to the FAA. No comments were received. Class E airspace designations are published in paragraph 6005 of FAA Order 7400.9U dated August 18, 2010, and effective September 15, 2010, which is incorporated by reference in 14 CFR 71.1. The Class E airspace designations listed in this document will be published subsequently in the Order.

The Rule

This action amends Title 14 Code of Federal Regulations (14 CFR) Part 71 by amending Class E airspace extending upward from 700 feet above the surface for standard instrument approach procedures at Kennett Memorial Airport, Kennett, MO. Decommissioning of the Kennett NDB and cancellation of the NDB approach has made it necessary to reconfigure the airspace to within a 6.6-mile radius of the airport for the safety and management of IFR operations. The FAA has determined that this regulation only involves an established body of technical regulations for which frequent and routine amendments are necessary to keep them operationally current. Therefore, this regulation: (1) Is not a "significant regulatory action" under Executive Order 12866; (2) is not a "significant rule" under DOT Regulatory Policies and Procedures (44 FR 11034; February 26, 1979); and (3) does not warrant preparation of a regulatory evaluation as the anticipated impact is so minimal. Since this is a routine matter that will only affect air traffic procedures and air navigation, it is certified that this rule, when promulgated, will not have a significant economic impact on a substantial number of small entities under the criteria of the Regulatory Flexibility Act.

The FAA's authority to issue rules regarding aviation safety is found in Title 49 of the U.S. Code. Subtitle 1, section 106, describes the authority of the FAA Administrator. Subtitle VII, Aviation Programs, describes in more detail the scope of the agency's authority. This rulemaking is promulgated under the authority described in subtitle VII, part A, subpart I, section 40103. Under that section, the FAA is charged with prescribing regulations to assign the use of airspace necessary to ensure the safety of aircraft and the efficient use of airspace. This regulation is within the scope of that authority as it amends controlled airspace at Kennett Memorial Airport, Kennett, MO.

List of Subjects in 14 CFR Part 71

Airspace, Incorporation by reference, Navigation (Air).

Adoption of the Amendment

■ In consideration of the foregoing, the Federal Aviation Administration amends 14 CFR part 71 as follows:

PART 71—DESIGNATION OF CLASS A, B, C, D, AND E AIRSPACE AREAS; AIR TRAFFIC SERVICE ROUTES; AND REPORTING POINTS

■ 1. The authority citation for 14 CFR part 71 continues to read as follows:

Authority: 49 U.S.C. 106(g), 40103, 40113, 40120; E.O. 10854, 24 FR 9565, 3 CFR, 1959–1963 Comp., p. 389.

§ 71.1 [Amended]

■ 2. The incorporation by reference in 14 CFR 71.1 of the Federal Aviation Administration Order 7400.9U, Airspace Designations and Reporting Points, dated August 18, 2010, and effective September 15, 2010 is amended as follows:

* * * * *

Paragraph 6005 Class E airspace areas extending upward from 700 feet or more above the surface.

* * * * *

ACE MO E5 Kennett, MO [Amended]

Kennett Memorial Airport, MO
(Lat. 36°13′33″ N., long. 90°02′12″ W.)

That airspace extending upward from 700 feet above the surface within a 6.6-mile radius of Kennett Memorial Airport.

Issued in Fort Worth, Texas, on October 26, 2010.

Anthony D. Roetzel,

Manager, Operations Support Group, ATO Central Service Center.

[FR Doc. 2010–28100 Filed 11–5–10; 8:45 am]

BILLING CODE 4910–13–P

DEPARTMENT OF TRANSPORTATION

Federal Aviation Administration

14 CFR Part 71

[Docket No. FAA–2010–0690; Airspace Docket No. 10–ASW–2]

Establishment of Class E Airspace; Berryville, AR

AGENCY: Federal Aviation Administration (FAA), DOT.

ACTION: Final rule.

SUMMARY: This action establishes Class E airspace for Berryville, AR, to accommodate Area Navigation (RNAV) Standard Instrument Approach Procedures (SIAP) at Carroll County Airport, Berryville, AR. The FAA is taking this action to enhance the safety and management of Instrument Flight Rule (IFR) operations at the airport.

DATES: *Effective Date:* 0901 UTC, January 13, 2011. The Director of the Federal Register approves this incorporation by reference action under 1 CFR part 51, subject to the annual revision of FAA Order 7400.9 and publication of conforming amendments.

FOR FURTHER INFORMATION CONTACT: Scott Enander, Central Service Center, Operations Support Group, Federal Aviation Administration, Southwest Region, 2601 Meacham Blvd., Fort Worth, TX 76137; telephone (817) 321–7716.

SUPPLEMENTARY INFORMATION:

History

On September 2, 2010, the FAA published in the **Federal Register** a notice of proposed rulemaking to establish Class E airspace for Berryville, AR, creating controlled airspace at Carroll County Airport (75 FR 53876) Docket No. FAA–2010–0690. Interested parties were invited to participate in this rulemaking effort by submitting written comments on the proposal to the FAA. No comments were received. Class E airspace designations are published in paragraph 6005 of FAA Order 7400.9U dated August 18, 2010, and effective September 15, 2010, which is incorporated by reference in 14 CFR 71.1. The Class E airspace designations listed in this document will be published subsequently in the Order.

The Rule

This action amends Title 14 Code of Federal Regulations (14 CFR) part 71 by establishing Class E airspace extending upward from 700 feet above the surface to accommodate SIAPs at Carroll County Airport, Berryville, AR. This action is necessary for the safety and management of IFR operations at the airport.

The FAA has determined that this regulation only involves an established body of technical regulations for which frequent and routine amendments are necessary to keep them operationally current. Therefore, this regulation: (1) Is not a "significant regulatory action" under Executive Order 12866; (2) is not a "significant rule" under DOT Regulatory Policies and Procedures (44 FR 11034; February 26, 1979); and (3) does not warrant preparation of a regulatory evaluation as the anticipated impact is so minimal. Since this is a routine matter that will only affect air traffic procedures and air navigation, it is certified that this rule, when promulgated, will not have a significant economic impact on a substantial number of small entities under the criteria of the Regulatory Flexibility Act. The FAA's authority to issue rules regarding aviation safety is found in Title 49 of the U.S. Code. Subtitle 1, section 106, describes the authority of the FAA Administrator. Subtitle VII, Aviation Programs, describes in more detail the scope of the agency's authority. This rulemaking is promulgated under the authority described in subtitle VII, part A, subpart I, section 40103. Under that section, the FAA is charged with prescribing regulations to assign the use of airspace necessary to ensure the safety of aircraft and the efficient use of airspace. This regulation is within the scope of that authority as it establishes controlled airspace at Carroll County Airport, Berryville, AR.

List of Subjects in 14 CFR Part 71

Airspace, Incorporation by reference, Navigation (Air).

Adoption of the Amendment

■ In consideration of the foregoing, the Federal Aviation Administration amends 14 CFR part 71 as follows:

PART 71—DESIGNATION OF CLASS A, B, C, D, AND E AIRSPACE AREAS; AIR TRAFFIC SERVICE ROUTES; AND REPORTING POINTS

■ 1. The authority citation for 14 CFR part 71 continues to read as follows:

Authority: 49 U.S.C. 106(g), 40103, 40113, 40120; E. O. 10854, 24 FR 9565, 3 CFR, 1959–1963 Comp., p. 389.

§ 71.1 [Amended]

■ 2. The incorporation by reference in 14 CFR 71.1 of the Federal Aviation Administration Order 7400.9U, Airspace Designations and Reporting Points, dated August 18, 2010, and effective September 15, 2010, is amended as follows:

Paragraph 6005 Class E airspace areas extending upward from 700 feet or more above the surface.

ASW AR E5 Berryville, AR [New]

Carroll County Airport, AR
(Lat. 36°22′53″ N., long. 93°37′28″ W.)

That airspace extending upward from 700 feet above the surface within a 8.9-mile radius of Carroll County Airport and within 4 miles each side of the 253° bearing from the airport extending from the 8.9-mile radius to 11.3 miles west of the airport.

Issued in Fort Worth, Texas, on October 26, 2010.

Anthony D. Roetzel,

Manager Operations Support Group, ATO Central Service Center.

[FR Doc. 2010–28103 Filed 11–5–10; 8:45 am]

BILLING CODE 4910–13–P

FEDERAL TRADE COMMISSION

16 CFR Part 1

Administrative Wage Garnishment

AGENCY: Federal Trade Commission.

ACTION: Final rule.

SUMMARY: This final rule establishes debt collection regulations for the Federal Trade Commission ("FTC" or "Commission" or "agency") to conform to the Debt Collection Act of 1982, as amended by the Debt Collection Improvement Act of 1996, the Federal Claims Collection Standards, and other laws applicable to the collection of nontax debts owed to the FTC.

DATES: This final rule is effective December 8, 2010.

FOR FURTHER INFORMATION CONTACT: Ami Joy Rop, Attorney, Division of Planning and Information, at *arop@ftc.gov;* telephone number 202–326–2648 (**Note:** this is not a toll-free call); or write to: Federal Trade Commission, 600 Pennsylvania Avenue NW., Washington, DC 20580.

SUPPLEMENTARY INFORMATION:

I. Background

This final rule implements the FTC's debt collection regulations to conform to the Debt Collection Act of 1982, Public Law 97–365, 96 Stat. 1749 (Oct. 25, 1982), as amended by the Debt Collection Improvement Act of 1996 (DCIA), Public Law 104–134, 110 Stat. 1321, 1358 (Apr. 26, 1996), the Federal Claims Collection Standards, 31 CFR parts 900 through 904, Debt Collection Authorities Under the Debt Collection Improvement Act of 1996, 31 CFR part

285, and other laws applicable to the collection of nontax debt owed to the Government.

Section 31001(o) of the DCIA (codified at 31 U.S.C. 3720D) authorizes collection of Federal agency debt by administrative wage garnishment. Wage garnishment is a process whereby an employer withholds amounts from an employee's wages and pays those amounts to the employee's creditor in satisfaction of a withholding order. The DCIA authorizes Federal agencies to garnish no more than 15% of the disposable pay of a debtor to satisfy delinquent nontax debt owed to the United States. Prior to the enactment of the DCIA, agencies were required to obtain a court judgment before garnishing the wages of non-Federal employees.

The DCIA directed the Secretary of the Treasury to issue implementing regulations (*see* 31 U.S.C. 3720D(h)) with respect to administrative wage garnishment. On May 6, 1998 (63 FR 25136), the Department of the Treasury published a final rule implementing the statutory administrative wage garnishment requirements at 31 CFR 285.11. Paragraph (f) of 31 CFR 285.11 provides that "[a]gencies shall prescribe regulations for the conduct of administrative wage garnishment hearings consistent with this section or shall adopt this section without change by reference." Under the DCIA, the Treasury Department serves as a coordinator for Federal debt collection through its Treasury Offset Program.

This final rule would amend the FTC's regulations at 16 CFR Part 1, Subpart N, to adopt 31 CFR 285.11 in its entirety. Specifically, the final rule would establish a new provision that would contain a cross-reference to 31 CFR 285.11.

II. Overview of the Administrative Wage Garnishment Process

Readers should refer to the Department of the Treasury regulation at 31 CFR 285.11 for details regarding the administrative wage garnishment procedures that would be adopted by this final rule. For the convenience of readers, the following presents an overview of the rules and procedures codified at 31 CFR 285.11.

1. Notice to Debtor

At least 30 days before the agency initiates garnishment proceedings, the agency will give the debtor written notice informing him or her of the nature and amount of the debt, the intention of the agency to collect the debt through deductions from pay, and an explanation of the debtor's rights regarding the proposed action.

2. Rights of Debtor

The agency will provide the debtor with an opportunity to inspect and copy records related to the debt, to establish a repayment agreement, and to receive a hearing concerning the existence or amount of the debt and the terms of a repayment schedule. A hearing, which may be in writing, by telephone, or in person, must be held prior to the issuance of a withholding order if the debtor's request is timely received. For hearing requests that are not received in the specified time frame, the agency need not delay the issuance of a withholding order prior to conducting a hearing. An agency may not garnish the wages of a debtor who has been involuntarily separated from employment until that individual has been re-employed continuously for at least 12 months. The debtor bears the responsibility of notifying the agency of the circumstances surrounding an involuntary separation from employment.

3. Hearing Official

The Department of the Treasury regulations authorize the head of each agency to designate any qualified individual as a hearing official. This final rule would provide that any hearing required to establish the FTC's right to collect a debt through administrative wage garnishment will be conducted by a qualified individual selected by the Chairman of the Commission. The hearing official is required to issue a written decision no later than 60 days after the request for a hearing is made. The hearing official's decision is the final agency action for purposes of judicial review.

4. Employer's Responsibilities

The Treasury Department will send to the employer of a delinquent debtor a wage garnishment order directing that the employer pay a portion of the debtor's wages to the Federal Government. The employer is required to certify certain payment information about the debtor. Employers are not required to vary their normal pay cycles in order to comply with these requirements. Employers are prohibited from taking disciplinary actions against the debtor because the debtor's wages are subject to administrative garnishment. An agency may sue an employer for amounts not properly withheld from the wages payable to the debtor.

5. Garnishment Amounts

As provided in the DCIA, up to 15% of the debtor's disposable pay for each pay period may be garnished. Special rules apply to calculating the amount to be withheld from a debtor's pay that is subject to multiple withholding orders. A debtor may request a review by the agency of the amount being garnished under a wage garnishment order based on materially changed circumstances—such as disability, divorce, or catastrophic illness—which result in financial hardship.

III. Procedural Requirements

A. Administrative Procedure Act

The FTC has determined that implementation of this rule without prior notice and the opportunity for public comment is warranted because this rule is one of agency procedure and practice and therefore is exempt from notice and comment rulemaking requirements under the Administrative Procedure Act (APA) at 5 U.S.C. 553(b)(A) and (B).

This final rule parallels the existing operational regulations of other agencies to effectuate the collection of non-tariff and nontax debts to implement 31 U.S.C. 3711. Because this rule parallels existing, long-standing rules that have already been subject to APA notice and comment procedures, we believe that publishing this rule with the usual notice and comment procedures is unnecessary. Accordingly, the FTC has determined that prior notice and public comment procedures would be unnecessary pursuant to 5 U.S.C. 553(b)(B).

B. Regulatory Flexibility Act

Because the Commission has determined that it may issue these rules without public comment, the Commission is also not required to publish any initial or final regulatory flexibility analysis under the Regulatory Flexibility Act as part of such action. *See* 5 U.S.C. 603(a), 604(b).

C. Paperwork Reduction Act of 1995

In accordance with the Paperwork Reduction Act of 1995 (44 U.S.C. 3506; 5 CFR part 1320 Appendix A), the Commission has reviewed the final rules. The rules contain no collections of information pursuant to the Paperwork Reduction Act.

List of Subjects in 16 CFR Part 1

Administrative practice and procedure, Claims, Debts, Garnishment of wages, Hearing and appeal procedures, Pay administration, Salaries, Wages.

Authority and Issuance

■ For the reasons set forth above, the Federal Trade Commission amends 16 CFR part 1 as follows:

■ 1. Amend part 1 by adding a new subpart N (consisting of § 1.100) to read as follows:

Subpart N—Administrative Wage Garnishment

Sec

1.100 Administrative wage garnishment.

Authority: 15 U.S.C. 46; 31 U.S.C. 3720D; 31 CFR 285.11(f).

§ 1.100 Administrative wage garnishment.

(a) *General.* The Commission may use administrative wage garnishment for debts, including those referred to Financial Management Service, Department of Treasury, for cross-servicing. Regulations in 31 CFR 285.11 govern the collection of delinquent nontax debts owed to federal agencies through administrative garnishment of non-Federal wages. Whenever the Financial Management Service collects such a debt for the Commission using administrative wage garnishment, the statutory administrative requirements in 31 CFR 285.11 will govern.

(b) *Hearing official.* Any hearing required to establish the Commission's right to collect a debt through administrative wage garnishment shall be conducted by a qualified individual selected at the discretion of the Chairman of the Commission, as specified in 31 CFR 285.11.

By direction of the Commission.

Richard C. Donohue,

Acting Secretary.

[FR Doc. 2010–28045 Filed 11–5–10; 8:45 am]

BILLING CODE 6750–01–P

DEPARTMENT OF TRANSPORTATION

Federal Highway Administration

23 CFR Part 511

RIN 2125–AF19

Real-Time System Management Information Program

AGENCY: Federal Highway Administration (FHWA), DOT.

ACTION: Final rule; request for comments.

SUMMARY: Section 1201 of the Safe, Accountable, Flexible, Efficient Transportation Equity Act: A Legacy for Users (SAFETEA–LU) requires the Secretary of Transportation (Secretary) to establish a Real-Time System Management Information Program that provides, in all States, the capability to monitor, in real-time, the traffic and travel conditions of the major highways of the United States and to share these data with State and local governments and with the traveling public. This rule establishes minimum parameters and requirements for States to make available and share traffic and travel conditions information via real-time information programs.

DATES: This rule is effective December 23, 2010. Establishment of the real-time information program for traffic and travel conditions reporting along the Interstate system highways shall be completed no later than November 8, 2014. Establishment of the real-time information program for traffic and travel conditions reporting along the State-designated metropolitan area routes of significance shall be completed no later than November 8, 2016. Comments must be received on or before December 23, 2010. Late-filed comments will be considered to the extent practicable.

FOR FURTHER INFORMATION CONTACT: Mr. Robert Rupert, FHWA Office of Operations, (202) 366–2194, or via e-mail at *robert.rupert@dot.gov.* For legal questions, please contact Ms. Lisa MacPhee, Attorney Advisor, FHWA Office of the Chief Counsel, (202) 366–1392, or via e-mail at *lisa.macphee@dot.gov.* Office hours for the FHWA are from 7:45 a.m. to 4:15 p.m., e.t., Monday through Friday, except Federal holidays.

SUPPLEMENTARY INFORMATION:

Electronic Access and Filing

This document, the notice of proposed rulemaking (NPRM), and all comments received may be viewed on line through the Federal eRulemaking portal at: *http://www.regulations.gov.* The Web site is available 24 hours each day, 365 days each year. Please follow the instructions.

An electronic copy of this document may also be downloaded by accessing the Office of the Federal Register's home page at *http://www.archives.gov* or the Government Printing Office's Web page at *http://www.gpoaccess.gov/nara.*

Comments may be submitted electronically to the Federal eRulemaking portal at *http://www.regulations.gov.* All comments should include the docket number that appears in the heading of this document. All comments received will be available for examination and copying at the above address from 9 a.m. to 5 p.m., e.t., Monday through Friday, except Federal holidays. Those desiring notification of receipt of comments must include a self-addressed, stamped postcard or you may print the acknowledgment page that appears after submitting comments electronically. Anyone is able to search the electronic form of all comments in any one of our dockets by the name of the individual submitting the comment (or signing the comment, if submitted on behalf of an association, business, or labor union). You may review DOT's complete Privacy Act Statement in the **Federal Register** published on April 11, 2000 (Volume 65, Number 70, Pages 19477–78) or you may visit *http://DocketsInfo.dot.gov.*

Background

History

Under the heading of "Congestion Relief," section 1201 of SAFETEA–LU (Pub. L. 109–59, 119 Stat. 1144, Aug. 10, 2005) requires the Secretary of Transportation to establish a Real-Time System Management Information Program to provide, in all States, the capability to monitor, in real-time, the traffic and travel conditions of the major highways of the United States and to share that information to improve the security of the surface transportation system, to address congestion problems, to support improved response to weather events and surface transportation incidents, and to facilitate national and regional highway traveler information. The purposes of the Real-Time System Management Information Program are to:

(1) Establish, in all States, a system of basic real-time information for managing and operating the surface transportation system;

(2) Identify longer range real-time highway and transit monitoring needs and develop plans and strategies for meeting such needs; and

(3) Provide the capability and means to share that data with State and local governments and the traveling public.

Section 1201(c)(1) of SAFETEA–LU states that as State and local governments develop or update regional intelligent transportation system (ITS) architectures, described in 23 CFR 940.9, such governments shall explicitly address real-time highway and transit information needs and the systems needed to meet such needs, including addressing coverage, monitoring systems, data fusion and archiving, and methods of exchanging or sharing highway and transit information. The FHWA envisions that States carrying out updates of regional ITS architectures would consider broadening the geographic coverage area for gathering

and reporting traffic and travel conditions.

These regulations do not impose any requirement for a State to apply any particular technology, any particular technology-dependent application, or any particular business approach for establishing a real-time information program. States and other public agencies are instead encouraged to consider any salient technology, technology-dependent application, and business approach options that yield information products consistent with the requirements set forth in this rule. States are encouraged to work with value added information providers to establish real-time information programs. Value added information providers presently and in the future will create information products for commercial use, for sale to a customer base, or for other commercial enterprise purposes. Based upon this rule, such products could be derived from information from public sector sources in addition to the private sector's own capabilities for creating information content.

The extent of the final rule is solely the provision of real-time information. It does not require the dissemination of the information in any particular manner, just that the State make said information available. The final rule does not require or mandate a particular technology nor on a technology-dependant application. States establishing a real-time information program would be able to employ any solution chosen to make information available. States and public agencies can enter into collaborative agreements with the private sector for establishing the program and gathering data. States and public agencies could purchase value added information products from value added information providers. States and public agencies could apply combinations of these, and other approaches to establish a successful real-time information program.

A Request for Comments was published on May 4, 2006, at 71 FR 26399, that presented a proposed scope for a Real-Time System Management Information Program. Using responses to this request, an NPRM proposing the creation of a new part 511 of 23 CFR was published on January 14, 2009, at 74 FR 1993. The purpose was to propose the establishment of minimum parameters and requirements for States to make available traffic and travel conditions information via real-time information programs.

A two-stage implementation was proposed in the NPRM that included the Interstate highway system as the first stage for coverage within 2 years, followed by other routes of significance as identified by the States within 4 years. The real-time information elements include lane or road closures because of traffic incidents and work zones, road weather observations, and, in metropolitan areas with populations greater than one million, travel times. The timeframes proposed for the information were 20 minutes outside of applicable metropolitan areas and 10 minutes for information in the metropolitan areas (except for roadway weather observations that remained at 20 minutes). It was proposed that the information be 85 percent accurate and available 90 percent of the time.

Summary Discussion of Comments Received in Response to the NPRM

The following presents an overview of the comments received in response to the NPRM.

Profile of Commenters

Comments were submitted by a representative cross-section of State and local agencies, business organizations, and individuals that will be affected by the Real-Time System Management Information Program established through this rule. The docket contained comments from 35 parties, two of which were duplicates. The commenters included 16 State departments of transportation (DOT); one automobile manufacturer; 2 State associations, the American Association of State Highway and Transportation Officials (AASHTO), and the Northwest Passage Pooled Fund Study; the Intelligent Transportation Society of America, a technical association; Texas Transportation Institute (TTI), a university research center; the Vehicle Traffic Information Coalition, a trade association; 3 traffic information providers; the 511 Coalition, a public/private traffic information coalition; 2 traffic information related software and equipment providers; 2 metropolitan planning organizations; a public safety operations and communications agency; and 2 individuals.

Overall, the commenters supported the goals of the proposed rule, namely collecting traffic information and making it available to other public and private entities. The comments from commercial companies tended to favor deployment to an even broader base than that specified in the proposed rule with the same or more aggressive schedule. Although several State DOTs commented that the data collection goals were already being met or were achievable in the proposed time frame, over two thirds of the DOTs indicated that the proposed schedule was too short, or that the deployment of the mandated capability would be too expensive. The AASHTO noted in its comments that AASHTO members believe the goals of the NPRM are good but would not be attainable for several of the members in the time frame proposed. The AASHTO also commented on the potential coordination challenges and conflicts among the existing federally-required processes related to regional ITS architectures and to transportation planning and the proposed real-time system management information program.

The AASHTO commented that FHWA needs to consider employing a phased approach, establishing goals and targets for the program with much longer timelines. The AASHTO and the States also recommend that any Real-Time System Management Information Program be based on implementing the State and regional ITS architectures and be based on regionally determined customer needs. Finally, AASHTO and the States asked FHWA to recognize that the proposed Real-Time System Management Information Program will have significant fiscal impacts to the States for implementing the necessary ITS capabilities initially and for ongoing operating and maintenance of the systems over time.

The FHWA has reviewed and analyzed the comments received and thanks the commenters for their insightful input. Based on other input from DOTs and on FHWA's observations of the various traffic and information systems that States and local agencies have deployed, the FHWA continues to find that many States have already accomplished much of the work necessary to establish their real-time information program and that the costs are containable within the funding eligibility categories identified by the rule. However, agencies almost unanimously responded that the 2-year time frame proposed in the NPRM to develop the information program was insufficient due to constraints imposed by their existing planning and budgeting cycles. Many agencies indicated that additional time was necessary to enable eligible funding categories to be programmed to develop their real-time management information program. Consequently, the FHWA reevaluated the consequences of extending the period of implementation. The FHWA concluded that a 4-year compliance date of the rule is an appropriate time frame for States to establish the real-time information program for traffic and travel conditions that encompass all

Interstate highways operated by the State. Further, FHWA found appropriate a 6-year effective date to establish the real-time information program along the State-designated metropolitan area routes of significance. The additional time provided by the rule is expected to afford States adequate time to establish their real-time information management program in concert with their other needs, priorities, and budgets.

Another area of concern expressed by a majority of DOTs is the accuracy that will be required of the data they are to share and expectations about how the program will be monitored. The TTI commented that a number of implementation details are not specified in the proposed rule. The TTI cited examples of how State agencies will know if their data meet the quality requirements, what evaluation guidance will be used, and how often agencies are to evaluate accuracy or timeliness. Kansas DOT (KDOT) further elaborated by commenting that many of the elements that are proposed to be provided will be subjectively measured or difficult to measure accurately. KDOT recommended that FHWA provide more information regarding the flexibility that States will have to determine levels of accuracy States can set or are able to achieve. KDOT further commented that FHWA needs to provide more information regarding expectations of how States would monitor performance or measure accuracy of the information.

The FHWA agrees philosophically that a highly detailed set of data quality statistics and an associated validation process are desirable. However, achievement of specific parameters and methodologies requires identifying in detail the intended usage for the data and the technology to be used for its acquisition. The FHWA believes that adopting this approach would place limitations on the use of the data that were not intended or desired, and in many instances would impose an unnecessary cost on agencies while attempting to comply with more detailed requirements. However, FHWA does acknowledge that, based on the comments received, additional clarification is needed for the effective implementation of the program. In response, and as suggested by a number of commenters, modifications have been incorporated into sec. 511.311(b) to better define the collaborative responsibilities and contributions of the State and the FHWA Division Office during the creation of the real-time information management program to include the identification of the processes to be used by the States in gauging and assuring the quality of the information to be made available by the real-time system management information program.

Several commenters included discussions about the methods used to disseminate the information. The methods and technologies to disseminate or distribute the information available from the Real-Time System Management Information Program are not within the scope of the regulation. In fulfilling the requirements of sec. 1201 of SAFETEA–LU, this regulation establishes a base level of information for traffic and travel conditions for all States. To provide agencies maximum latitude in their use of the information and the use of the information by their partners, the rule does not specify requirements or details related to information distribution methods. States and other public agencies are instead encouraged to consider any salient technology, technology-dependent application, and business approach options that yield information products consistent with the requirements set forth in this rule.

Many DOTs expressed concern about the proposed rule's requirements to provide roadway weather information, with particular concern expressed about the 20 minute update requirement. The California DOT agreed that weather information is vital but noted that there are numerous providers currently in the business, and suggested that the requirements be diminished. The KDOT commented that it is relatively easy to report weather information through existing weather stations but it is more difficult to produce road information that is useful to the motorist, and that updating this information every 20 minutes is not feasible without large investments in unproven technology. After further review, the FHWA agrees that the proposed requirements for weather information exceed the proposed requirements for other travel conditions and are not as uniformly applicable for all States. To be consistent with information for other travel conditions under the Real-Time System Management Information Program, sec. 511.309(a)(3) of the rule has been modified to indicate that the State's Real-Time System Management Information Program is required to provide confirmed weather related hazardous driving conditions and roadway- or lane-closure information, and that the information made available is to be updated within 20 minutes of notice of a changed condition.

A number of agencies commented on the difficulty of providing travel time data on the non-Interstate roadways designated as routes of significance. The Michigan DOT (MDOT) remarks summarized these concerns in its comments, noting that the MDOT does not believe there is a current system or algorithm that can be implemented at a reasonable cost that can collect travel times on surface streets. The FHWA agrees with this comment. Accordingly, the definition for traffic and travel conditions in sec. 511.303 removes the extent and degree of congested conditions as one of the characteristics of traffic and travel conditions and the requirements are modified in sec. 511.309(a)(4) for the real-time system management system to make available travel time information in metropolitan areas only on Interstate and other limited-access roadways that are designated as routes of significance.

In the NPRM, the FHWA requested comments on the viability and practicality for including transit event information. With the exception of one individual and the Chicago Office of Emergency Management and Communications, the commenters did not encourage including transit information. AASHTO's response was, "We recognize the value of reporting transit information along with roadway information through similar channels to the end user. However, there are significant challenges associated with achieving this goal. A real-time system management information program requiring transit information would require agreements with transit agencies over which the state DOT has no control." NAVTEQ recommended that instead of including transit event information in this rule that a parallel outreach and rule-making process be established to develop the transit portion of the program. Based on this input the FHWA determined that including transit event information delivery from a real-time information program is not practical at this time.

The FHWA requested comments on the viability and practicality for using varying roadway segment lengths for conveying travel time for a real-time information program. AASHTO, several DOTs, and INRIX indicated that requiring segment lengths as part of the rule will make it difficult for many agencies to comply. The Pennsylvania DOT pointed out that imposing maximum segment lengths potentially eliminates public-private partnerships from occurring. The AASHTO requested in its comments that States have flexibility to work with FHWA to develop provisions for traffic and travel time reporting that are specific to each State's individual situation. After evaluating the comments received regarding specifying roadway segment

lengths for conveying travel time in the rule, FHWA concurs with AASHTO's recommendation and has not added specifications for roadway segment lengths referenced in sec. 511.309(a)(4) in the regulation.

In the NPRM discussion of Executive Order 12866, the FHWA requested comments on the economic analysis of the proposed regulations including appropriateness of using the Georgia Navigator study in the "Regulatory Cost Analysis of Proposed Rulemaking" to estimate benefits. INRIX commented that the estimates using data from the Navigator study dramatically overstate costs associated with urban area traffic monitoring. INRIX contends that the data collection technologies Navigator uses are much more expensive than currently available data collection technologies. Since the choice of technologies is to be determined by the agencies, INRIX's comment indicates the analysis performed may be conservative in some cases. The KDOT concurred with AASHTO's comments agreeing with the benefit-cost analysis that shows a positive return on investment. However, AASHTO also identifies two concerns: The cost associated with trying to measure travel times on signalized arterial streets, and a request for the cost of variable message signs to be considered in the analysis. As discussed previously, the requirement to deliver travel time on arterial streets has been removed from the rule, which alleviates the first concern. Regarding the second concern, specific delivery methods or technologies are not within the scope of this regulation. FHWA determined that the cost of these signs is not relevant as the rule pertains only to making the real-time information available and does not include the delivery mechanism or the costs associated with the mechanism.

The FHWA also requested comments regarding how DOTs anticipated they will comply with the proposed regulations, including technologies and cost. The "Regulatory Cost Analysis of Proposed Rulemaking" assumed a traditional device-based approach for estimating costs to ensure a conservative (high) implementation estimate as a basis. Other techniques for gathering traffic flow information, such as those offered by the private sector, could result in implementation costs that are 87 percent lower.[1]

The MDOT and Virginia DOT (VDOT) submitted cost estimates. The MDOT noted a number of activities that it believed needed to be completed to properly implement the Real-Time System Management Information Program as proposed. These activities included developing a real-time cell phone application to be used by field personnel for lane closures and openings, developing a central application to receive the field reports and transmit those reports to other systems and the public, developing Computer Aided Dispatch (CAD) interfaces with every 911 call center and CAD implementation in the State of Michigan, and maintaining additional staff on a 24-hour basis, with at least one person needed to handle each of MDOT's seven regions and possibly more in the Detroit metropolitan area. MDOT estimated that the system will cost $55,000,000 to $85,000,000 to develop. Of this, $28,000,000 to $56,000,000 is for deployment of an extensive roadway weather information system that likely is not required for a real-time information program.

At the low end of the cost range, VDOT commented that for it to fully comply with aspects of the proposed rule, an expansion of existing data services and of CAD and transportation operations center integration efforts would be required. To meet the requirements for real-time traveler information, including travel times, VDOT noted that it would likely expand an existing data services contract to receive data for approximately 1,200 miles of Interstate, estimated to require a minimum investment of $1,000,000 per year. The VDOT further commented that it would need to integrate information from approximately 60 of the 127 local 911 centers in Virginia. The VDOT estimates that the approximate cost to integrate a 911 center with a transportation operations center is $125,000, for a total statewide capital cost of $7,500,000, plus increased costs for operations, maintenance and hosting services. The VDOT commented that FHWA should consider funding this effort with an annual commitment of $2M, based on VDOT's ability to only apply a limited level of funding over the next few years.

The differences in the two agencies' comments related to the costs for implementing the regulation reflect the different levels of existing capabilities and reinforce the need to allow flexibility to the States in identifying roadways beyond the Interstate routes to be included in the Real-Time System Management Information Program. The considerable differences in the two agencies' interpretations of the proposed requirements confirms the need for implementation guidance that FHWA will develop for DOTs as assistance in the development of their real-time information programs. Later in this document, the FHWA is requesting additional comments on the cost benefit analysis to obtain more specific information in order to achieve the objectives of the statute and the rule to ensure an optimal benefit and cost balance.

Comments Directed at Specific Sections of the Proposed New 23 CFR Part 511

Section 511.301—Purpose

As indicated previously, almost every response supports the goals of the proposed rule. A common comment among all responders is "we support the desire of FHWA to promote advances in the delivery of traveler information," and the NPRM was praised for being well meaning and ultimately beneficial as travelers will be more informed than they are today. However, as already discussed and as presented in subsequent sections, commenters did not uniformly support all of FHWA's approaches to achieving those goals.

Section 511.303—Definitions

In the NPRM, definitions were included in proposed § 511.305, but for this final rule to be consistent with other regulations, definitions are in § 511.303.

As indicated earlier, comments were received requesting clarification about the definition of "accuracy," and a similar clarification concerning roadway weather conditions. In both cases, the definitions for these terms and related language in § 511.303 have been supplemented to clarify these distinctions.

INRIX suggested that the term "(*e.g.,* volume and speed are * * *)" used in the definition for "*availability*" be changed to "(*e.g.,* speed and travel time)" since volume is only used one time in the rule, and only for illustrative purposes. The TTI suggested eliminating definitions for "accessibility" and "coverage" as these terms are not used in the proposed rule. The FHWA agrees with these comments and § 511.303 of the rule has been modified accordingly.

Comments on subsequent sections of the proposed rule that are discussed

[1] The "Regulatory Cost Analysis of Proposed Rulemaking" assumed a cost of $76,789 per mile to instrument a freeway to gather information consistent with that proposed in this rulemaking. A project undertaken by the I–95 Corridor Coalition that procured real-time information from a private provider (INRIX) used a data acquisition cost model that provides traffic flow information consistent with the information proposed in this rulemaking for a cost of $9,535 per mile, amortized over 10 years. Information about the I–95 Coalition project is available at *http://www.i95coalition.org.*

elsewhere resulted in including additional definitions in the rule. The definitions of "full construction activities" and the definition of "routes of significance" have been added to § 511.303.

Although no specific comments were received concerning the "traffic and travel conditions" definition allowing the reporting of predicted conditions, this clause was determined to be unnecessary and was removed from § 511.303.

Section 511.307—Eligibility for Federal Funding

Section 511.307 outlines the eligibility of Federal funding to plan and deploy the real-time monitoring elements and the project applications to establish a real-time information program on Interstate and non-Interstate highways. Almost all agencies commented that establishing a real-time information program either costs too much or puts a financial hardship on them, and requested that dedicated funding be provided. Addressing this request for dedicated funding is beyond the purview of the rule. However, additional comments indicated financial burdens were due to the inability of agencies to use eligible funds within the time frame specified in the rule due to their planning and budgeting cycles. As indicated previously, FHWA determined that extending completion of establishing the real-time information program for traffic and travel conditions will facilitate State and local agencies use of the eligible funds identified in this section.

The AASHTO, five DOTs, and INRIX identified funding for the operation and maintenance costs of a Real-Time System Information Management Program as a barrier to its implementation. In several instances the comments also indicated a misunderstanding of the eligibility of the operating and maintenance costs of such a system for Federal funding. The funds identified in *§ 511.307 Eligibility for Federal funding* of the final rule may be applied to the operating and maintenance costs of a Real-Time System Information Management Program. The Transportation Equity Act for the 21st Century (TEA–21) reinforces the Federal commitment to manage and operate the Nation's transportation system. Under TEA–21, the Federal-aid Highway Program continues eligibility of operating costs for traffic monitoring, management, and control. The legislation defines operating costs as including labor costs, administrative costs, costs of utilities and rent, and other costs associated with the continuous management and operation of traffic systems. Additional information concerning operating cost eligibility under the Federal-aid Highway Program can be found at URL: *http://www.ops.fhwa.dot.gov/travelinfo/resources/ops_memo.htm.* To more completely illustrate funding eligibility, the final rule's language has been modified to include an explicit reference to the eligibility of operations, including applicable preventative maintenance to ensure reliable operations, for funding.

Section 511.309—Provisions for Traffic and Travel Time Conditions Reporting

Section 511.309 presents the timeliness, accuracy, and availability provisions that the real-time information programs are subject to for reporting traffic and travel time conditions; and authorizes use of legacy or new mechanisms to establish the real-time information programs. Almost all of the commenters included a comment on one or more of the proposed provisions with most expressing concern that many of the requirements were not achievable. The San Francisco Bay Area Metropolitan Transportation Commission (MTC) commended FHWA for basing the proposed requirements on the work of an industry group such as the 511 Coalition. However, MTC expressed concerns about translating the recommended goals from the industry group to required minimum requirements for the Real-Time System Management Information Program and commented that there needs to be some tailoring of the recommendations. In contrast, several companies viewed the requirements differently and commented that more restrictive provisions should be specified. For example, NAVTEQ commented that the final rule should reduce the timeliness requirements from 10 and 20 minutes (urban and rural) to 5 and 10 minutes. BMW also commented that 5 minutes or less was more appropriate, but also indicated that the reduced time limits initially should be treated as goals. The following summarizes the responses to this section.

511.309(a)(1) Construction Activities

The NPRM proposed a timeliness requirement for providing full construction activities from the time of occurrence of 20 minutes or less for highways outside of metropolitan areas and 10 minutes or less for highways within metropolitan areas. As noted previously, many DOTs described the difficulty of obtaining construction activity information in rural areas and asserted that the cost to provide construction activity information specified in the proposed rule would greatly exceed any potential benefit. They also requested clarification of the expectations intended in the time thresholds. The FHWA finds many of the difficulties described by the proposed rule to be valid and has included the definition for "full construction activities" in § 511.301 and has modified the rule language in § 511.309(a)(1) to clarify which construction activities that close or reopen roads and lanes are to be reported, how quickly the information is to be made available, and the information update requirements.

Section 511.309(a)(2) Roadway or Lane Blocking Incidents and Events

Section 511.309(a)(2) presents the requirements for providing information about roadway or lane blocking traffic incidents. The requirements for providing this information are similar to those specified in § 511.309(a)(1) above, and received similar comments. Many commenters requested clarification related to whether the reporting requirement for traffic incidents was related to the time of the occurrence of the incident or to the verification of the incident. The FHWA has modified the rule language in § 511.309(a)(2) to clarify the requirements of the information to be made available are based on when the traffic incident is verified.

Section 511.309(a)(3) Roadway Weather Observations

Section 511.309(a)(3) presents the requirements for delivering roadway weather observations. As discussed earlier, many DOTs expressed concern about the timeliness requirements in the proposed rule that the roadway weather observation information was to be made available. They also requested clarification of the information to be reported. The FHWA has modified the rule language in § 511.309(a)(3) to clarify that the minimum reporting requirements are for weather conditions that result in hazardous driving conditions or roadway and lane closures.

Section 511.309(a)(4) Travel Time Information

Section 511.309(a)(4) presents the requirement for providing updated travel time information along highways within metropolitan areas. In response to comments that practical algorithms and systems to derive travel times on roadways currently exist only for limited access highways, the rule's

language in § 511.309(a)(4) has been modified to clarify the minimum requirement for updated travel time information is for Interstate and designated routes of significance in the Metropolitan Areas that are limited access highways.

Section 511.309(a)(5) Information Accuracy and Section 511.309(a)(6) Information Availability

In response to requests for clarification of the accuracy and availability relationship from several agencies, the rule's language in § 511.311(b) has been modified as noted below.

Section 511.311(b) Real-Time Information Program Establishment—Data Quality

Section 511.311(b) requires States to develop methods by which data quality can be ensured to the data consumer. Several agencies questioned how timeliness, availability, and accuracy will be measured. They asked what are FHWA's expectations for how DOTs will monitor the program. The rule's language in § 511.311(b) has been modified to afford flexibility to States in meeting quality requirements based on the methods they select to implement the Real-Time System Management Information Program. The States shall develop procedures or processes for measuring and ensuring the quality of the information provided under the Real-Time System Management Information Program, and receive concurrence from FHWA on the selected processes. The States shall demonstrate how the selected processes measure the quality of the information in meeting the requirements of sections 511.309(a)(5) and 511.309(a)(6) and provide for remedial actions to maintain the required levels of quality.

Section 511.311(c) Real-Time Information Program Establishment—Participation

Agencies that should participate in implementation of a real-time information program are listed in § 511.311(c). The comments generally acknowledged that significant cooperation is desired, but mentioned drawbacks of requiring multiple partners. Several DOTs pointed out that State agencies cannot verify the accuracy or timeliness of data from another agency. Commenters also pointed out that widespread agency participation will necessitate education and training be provided for first responders such as county/local law enforcement and fire departments. The FHWA recognizes the institutional difficulties that must be resolved for multiagency participation in a real-time information program, but continues to believe that the benefits realized far exceed the efforts required to craft a successful program.

Section 511.311(d) Real-Time Information Program Establishment—Update of Regional ITS Architecture

Section 511.311(d) discusses the requirement that States and regions that have created a Regional ITS architecture are required to maintain and update the architecture, and indicates in broad terms the general factors that must be addressed by the updated architecture including featuring the components and functionality of the Real-Time System Management Information Program. Several comments mistakenly applied the regional ITS architecture general factors to the requirements of the Real-Time System Management Information Program. The AASHTO commented that the State and regional ITS architectures that have been developed are based on regionally determined customer needs and may have identified other higher priority needs in their architecture than those identified in the NPRM. The AASHTO notes that this may present a particular concern to the State agencies if funding has already been allocated to those areas. Many commenters expressed that the 2 year time frame is too short for some States and regions to address their regional ITS architecture issues. For this reason, among others, FHWA has extended the time requirement in sections 511.311(e) and 511.313(d) to establish the real-time information program to 4 years after publication of final rule.

The San Francisco Bay Area MTC commented that, while § 511.311(d) requires ITS architectures to be updated to reflect the requirements of the Real-Time System Management Information Program, some ITS architectures may already include requirements for the Real-Time System Management Information Program. The MTC comments that § 511.311(d) should be modified to require ITS architectures to be evaluated to determine if updates are needed to reflect the Real-Time System Management Information Program, and that those that do not adequately reflect the Real-Time System Management Information Program should be updated accordingly. The FHWA agrees with this comment and the rule language in § 511.311(d) has been modified to require evaluation of ITS architectures to determine whether they need to be updated to reflect requirements of the Real-Time System Management Information Program.

Section 511.311(e) Real-Time Information Program Establishment—Effective Date

Section 511.311(e), which specifies an effective date of 2 years after publication to establish a Real-Time System Management Information Program, drew many responses. As reported earlier, based on the comments received, FHWA has changed the § 511.311(e) to require establishment of the Real-Time System Management Information Program for traffic and travel conditions reporting along the Interstate system highway within 4 years after the date of the rule's publication.

Section 511.313(b) Metropolitan Area Real-Time Information Program Supplement—Requirement

Metropolitan Areas are required to implement a Real-Time System Management Information Program on both Interstates and routes of significance in the Metropolitan Area. The term "Metropolitan Area" is intended to allow options for either the State or the Metropolitan Area's local government agency to implement the program, based on what works best for each location.

Section 511.313(c) Metropolitan Area Real-Time Information Program Supplement—Routes of Significance

Several DOTs submitted questions concerning designation of "routes of significance" in metropolitan areas. Several of the commenters observed that success of these provisions require cooperation between the agencies and FHWA concerning priorities, funding, and staffing, and that consultation with FHWA is necessary to define their specific system. The FHWA concurs with these observations. Furthermore, upon reviewing this section, the specific responses to the questions raised are dependent upon local conditions and should be resolved through a dialogue between the local agencies and their respective FHWA Divisions. In response to the comments received about "routes of significance," its definition is included in § 511.303

As indicated, many of the DOTs responding to the NPRM identified the 4-year time requirement to establish routes of significance real-time information program to be unattainable. Based on these comments, § 511.313(c) of the rule has been changed to indicate a 6-year time requirement for implementation of the Real-Time System Management Information Program on "routes of significance" in Metropolitan Areas.

Section 511.313(d) Metropolitan Area Real-Time Information Program Supplement—Effective Date

As indicated earlier, AASHTO and many of the DOTs responding to the NPRM identified the 2-year time requirement to establish the Metropolitan Area real-time information program to be unattainable. The rule now allows 4-years for establishment of the program in Interstate routes in Metropolitan Areas.

Section 511.315 Program Administration

Section 511.315 concerns compliance with the rule and the ability for FHWA to withhold highway trust funds based on compliance. Many DOTs were concerned about that possibility and wanted to know more about how compliance would be assessed and judged. As stated previously, § 511.311(b) of the rule has been edited to provide additional parameters regarding data quality and completeness, and to include language that describes the compliance verification processes to be applied in each State, as agreed between the State and FHWA. Section 511.315 states that procedures normally available to FHWA for Federal-aid actions are also applicable to actions related to the Real-Time System Management Information Program. Paragraph (a) of § 511.315 has been deleted because the subsection presented a potential ambiguity or contradiction in requiring compliance prior to approving projects to establish the Real-Time System Management Information Program. The proposed § 511.315(a) provisions are included in the remaining paragraph of § 511.315 by including a reference to ITS project administration contained in 23 CFR 940.13.

Request for Comments

While the FHWA is issuing this final rule, which will become effective on the dates noted above, the FHWA is also seeking additional comments relating to the costs and benefits of the Real-Time System Management Information Program and general information about current and planned programs. Although the Regulatory Cost Analysis found in the docket for this rulemaking attempts to capture the scope of costs and benefits associated with this rule, it is challenging to determine a comprehensive picture of costs and benefits given the flexibility of approaches that can be used and the limitations of the current studies.

The FHWA seeks comments related to the following:

(1) What are the costs and benefits of each individual provision required under rule? If some provisions have net costs, would certain modifications to those provisions lead to net benefits?

(2) What are the impacts of requiring these provisions on States and Metropolitan Areas (do some States and Metropolitan Areas realize net costs instead of net benefits)? If some States and Metropolitan Areas realize net costs, would certain modifications to provisions ensure net benefits?

(3) Is there a specific, alternative approach to calculating costs and benefits that would be more appropriate than the current use of the Atlanta Navigator Study?

(4) Although information dissemination to the public is not within scope of this rule, it is important to understand how information is typically disseminated so that the technologies used to collect and monitor data is compatible with technologies used to disseminate this information. This is especially important to keep up with new technological advances and to ensure that States use the most effective, low cost methods to both collect and disseminate information.

(A) What technologies will States use to collect and monitor information under this rule?

(B) What technologies are States planning to use to disseminate this information or what are they already using?

(C) Do the technologies States plan to use present any interoperability issues? Do they allow for use of advanced technologies that could be the most cost-effective means of collecting and disseminating this information?

(D) Are there any structural impediments to using low-cost advanced technologies in the future given the provisions and specifications contained in this rule?

(E) Given the research investment into wireless communications systems in the 5.9 GHz spectrum for Intelligent Transportation Systems applications, to what extent could systems in this spectrum also be used to fulfill the requirements of this rule and/or enable other applications?

(F) Given that there are legacy technologies in place now, and that there are new technologies on the horizon that are being adopted, how can we ensure that investments made today to comply with this rule are sustainable over the long term?

(5) This rule defines *Metropolitan Areas* to mean the geographic areas designated as Metropolitan Statistical Areas by the Office of Management and Budget with a population exceeding 1,000,000 inhabitants. Is this population criterion appropriate, rather than considering traffic, commuting times, or other considerations?

Rulemaking Analyses and Notices

Executive Order 12866 (Regulatory Planning and Review) and DOT Regulatory Policies and Procedures

The FHWA has determined that this rule is an economically significant rulemaking action within the meaning of Executive Order 12866 and is a significant rulemaking action within the meaning of the U.S. Department of Transportation's regulatory policies and procedures. This rule establishes provisions and parameters for States to implement real-time monitoring of the transportation system as mandated in section 1201 of SAFETEA–LU. The Real-Time System Management Information Program is a newly created and complex program, receiving no dedicated Federal funding. This action is considered significant because of the substantial State and local government, and public interest in the information products enabled through this program.

This rule does not adversely affect, in a material way, any sector of the economy. This rule sets forth provisions and parameters for State DOTs to implement on Interstate highways and maintain from 2010 until 2019 an effective Real-Time System Management Information Program, which will result in some cost impacts to States or Metropolitan Planning Organizations (MPOs). This period would reflect the establishment of real-time information programs plus a 7-year period of operation. The 7-year period of operation assumes that equipment and supporting material for the real-time information program is fully replaceable after the operational life cycle. The FHWA has conducted a cost analysis identifying each of the proposed regulatory changes that would have a significant cost impact for MPOs or DOTs. This cost analysis is included as a separate document, entitled "Regulatory Cost Analysis of Proposed Rulemaking," and is available for review in the docket. Based on the cost analysis, FHWA estimates that the net present value of the estimated costs and benefits through 2021 represents at least a $315 million benefit to American travelers and taxpayers, corresponding to a benefit-cost ratio of 1.3. In addition, the DOTs have the flexibility to use most other Federal highway dollars including Congestion Mitigation and Air Quality (CMAQ) program and Surface Transportation Program (STP) funds for real-time monitoring program

implementation. Additionally, State Planning and Research funds can be applied fully towards the planning of real-time monitoring projects.

Based on the annual costs and the annual benefits noted above, the following table summarizes the annualized costs, benefits, and net benefits (in million $) at discount rates of 3 percent and 7 percent.

3%	
NPV Costs	$1,404.62
NPVBenefits	$1,765.04
Annualized Costs	**$141.11**
Annualized Benefits	**$177.32**
Annualized Net Benefits	**$36.21**
7%	
NPV Costs	$1,158.50
NPVBenefits	$1,289.20
Annualized Costs	**$145.86**
Annualized Benefits	**$162.31**
Annualized Net Benefits	**$16.45**

Regulatory Flexibility Act

In compliance with the Regulatory Flexibility Act (Pub. L. 96–354, 5 U.S.C. 601–612) FHWA has evaluated the effects of this action on small entities. The FHWA has determined that States and MPOs are not included in the definition of small entity set forth in 5 U.S.C. 601. Small governmental jurisdictions are limited to representations of populations of less than 50,000. MPOs, by definition, represent urbanized areas having a minimum population of 50,000. The FHWA certifies that this action does not have a significant economic impact on a substantial number of small entities.

Unfunded Mandates Reform Act of 1995

Section 202 of the Unfunded Mandates Reform Act of 1995 (UMRA) (Pub. L. 1041–4; 109 Stat. 48) requires Federal agencies to prepare a written assessment of the costs, benefits, and other effects of proposed or final rules that include a Federal mandate likely to result in the expenditure by States, local, or tribal governments, in the aggregate, or by the private sector, of more than $100 million annually (adjusted for inflation to $141.3 million in 2008 dollars). Before promulgating a rule for which a written statement is needed, section 205 of the UMRA generally requires the agency to identify and consider a reasonable number of regulatory alternatives and adopt the least costly, most cost-effective, or least burdensome alternative that achieves the objective of the rule. The provisions of section 205 do not apply when they are inconsistent with applicable law. Moreover, section 205 allows the agency to adopt an alternative other than the least costly, most cost-effective, or least burdensome alternative if the agency publishes with the final rule an explanation of why that alternative was not adopted.

This final rule does not impose unfunded mandates as defined by the UMRA. The definition of "Federal Mandate" in the UMRA excludes financial assistance of the type in which State, local, or tribal governments have authority to adjust their participation in the program in accordance with changes made in the program by the Federal Government. (2 U.S.C. 658, 1502) The Federal-aid highway program permits this type of flexibility. Conditions for obtaining Federal grant funds, including new conditions on existing grant programs, are not considered Federal Mandates under the law. States have the flexibility to offset the costs of this statutory requirement by amending their responsibilities for financing and carrying out their program, and any additional costs resulting from this Federal action can be offset by changes in State or local policies.

The effects of this rule are discussed earlier in the preamble and in the "Regulatory Cost Analysis of Proposed Rulemaking" contained in the docket for this rulemaking. The FHWA has taken care to craft the final rule for this statutory requirement in such a way that offers States broad flexibility to minimize costs of compliance with the standard. Because the rule is neither centered on a particular technology nor on a technology-dependent application, these documents consider a number of alternatives and provide a number of technological choices. This rule provides a phased implementation approach and limits the content requirements for a real-time information system only to those needed to provide congestion relief. Additionally, while no new funding is available for this program, to the extent that the final rule will require expenditures by State, local, or tribal governments, these activities will not be unfunded mandates because States and MPOs are afforded flexibility to use their National Highway System, CMAQ, and STP Federal-aid apportionments for activities related to the planning and deployment of real-time monitoring elements that advance the goals of the Real-Time System Management Information Program. How the States use these funds is only limited by the statutory and regulatory grant requirements and conditions. As such, the agency has chosen the most cost-effective alternative that achieves the objectives of the rulemaking.

Executive Order 13132 (Federalism)

This rule has been analyzed in accordance with the principles and criteria contained in Executive Order 13132, and the FHWA has determined that this action does not have sufficient

federalism implications to warrant the preparation of a Federalism assessment. The FHWA has also determined that this action would not preempt any State law or State regulation or affect the States' ability to discharge traditional State governmental functions. The FHWA contacted the National Governors' Association in writing about this determination. The National Governors' Association did not respond.

Paperwork Reduction Act

Under the Paperwork Reduction Act of 1995 (PRA) (44 U.S.C. 3501 *et seq.*), Federal agencies must obtain approval from the Office of Management and Budget (OMB) for each collection of information they conduct, sponsor, or require through regulations.

The FHWA has determined that this rule contains a requirement for data and information to be collected and maintained in the support of operational decisions that affect the safety and mobility of the traveling public related to information on construction activities, including implementing and removing lane closures; roadway or lane blocking traffic incident information; roadway or lane blocking roadway weather conditions; and calculated travel times along highway segments. In order to streamline the process, FHWA requested that OMB approve a single information collection clearance for all of the data in this regulation. The Real-Time System Management Information Program supports the collection of transportation system data, including the use of automated methods, with the transportation system data available for other use. The Real-Time System Management Information Program itself does not produce informational or reporting products that are required by the U.S. Department of Transportation or other entities in the Federal Government.

Commenters to this information collection include DOTs from all 50 States, Puerto Rico, and the District of Columbia. The FHWA estimates that 17 States presently do not appear to provide real-time information on a continual basis to the public or to other States using conventional information dissemination technologies.[2] The FHWA estimates that a total of 148,920 burden hours per year would be imposed on these non-Federal entities to provide all the required information to comply with the proposed regulation requirements for real-time information programs.[3]

Further, there are 36 States operating at least one 511 traveler information dissemination service that provide nearly all of the information categories identified in this proposed regulation.[4] The automated systems that gather the input for delivery for 511 also convey information via Dynamic Message Signs (DMS) for en-route travelers. The use of DMS is common for conveying travel time information messages. Based on known reports for 511 delivery services and for travel time messages on DMS in metropolitan areas[5] a more accurate calculation of the burden hours is possible. For all 36 States known to provide automated real-time traveler information: All 36 States provide construction activities information; all 36 States provide roadway incident information; and 31 States provide roadway weather observations. Of the 49 metropolitan areas currently subject to the provisions of travel time information required by this regulation, 33 provide travel time information on highway segments.

The estimated total burden to provide the additional information needed to attain full compliance with the proposed regulation includes 148,920 burden hours for States with no observable real-time information capability, plus 140,160 burden hours for subject metropolitan areas to deliver travel time information, plus 43,800 burden hours for States with real-time information capabilities to deliver weather observation updates. The total estimated burden, therefore, is 332,880 hours for automated sources to deliver the information categories identified in this regulation.

National Environmental Policy Act

The agency has analyzed this proposed action for the purpose of the National Environmental Policy Act of 1969 (42 U.S.C. 4321–4347) and has determined that the establishment of the Real-Time System Management Information Program, as required by the Congress in SAFETEA–LU, may yield a $384 million benefit from the reduction of greenhouse gas emissions and also from reductions of fuel consumption[6] and has determined that this rule will not significantly affect the quality of the human environment. The promulgation of regulations has been identified as a categorical exclusion under 23 CFR 771.117(c)(20).

Executive Order 12630 (Taking of Private Property)

The FHWA has analyzed this proposed rule under Executive Order 12630, Governmental Actions and Interference with Constitutionally Protected Property Rights. The FHWA does not anticipate that this action would affect a taking of private property or otherwise have taking implications under Executive Order 12630.

Executive Order 12988 (Civil Justice Reform)

This action meets applicable standards in sections 3(a) and 3(b)(2) of Executive Order 12988, Civil Justice Reform, to minimize litigation, eliminate ambiguity, and reduce burden.

Executive Order 13045 (Protection of Children)

We have analyzed this proposed rule under Executive Order 13045, Protection of Children from Environmental Health Risks and Safety Risks. The FHWA certifies that this action would not cause any environmental risk to health or safety that might disproportionately affect children.

Executive Order 13175 (Tribal Consultation)

The FHWA has analyzed this action under Executive Order 13175, dated November 6, 2000, and believes that this action would not have substantial direct effects on one or more Indian tribes; would not impose substantial direct compliance costs on Indian tribal governments; and would not preempt tribal laws. The final rule addresses provisions and parameters for the Real-Time System Management Information Program and would not impose any direct compliance requirements on Indian tribal governments. Therefore, a tribal summary impact statement is not required.

Executive Order 13211 (Energy Effects)

We have analyzed this proposed action under Executive Order 13211, Actions Concerning Regulations That Significantly Affect Energy Supply, Distribution, or Use dated May 18, 2001.

[2] Based upon the table "Freeway Miles Under Traffic Surveillance" from the 2007 Metropolitan Summary survey. This table is retrievable from the ITS Deployment Statistics Web site, available at the following URL: *http://www.itsdeployment.its.dot.gov/Results.asp?year=2007&rpt=M&filter=1&ID=307.*

[3] Burden hour calculation based on 8,760 hours per year multiplied by the number of locations (17).

[4] Based upon the "Locations with 511 Services" information available at the following URL: *http://www.ops.fhwa.dot.gov/511/.* As of July 2009 there are 39 known 511 systems in operation.

[5] Based on the page "Travel times on DMS Status," available at the following URL: *http://www.ops.fhwa.dot.gov/travelinfo/dms/.*

[6] This estimated benefit is documented in Table 1 on Page 14 of the *Regulatory Benefit-Cost Analysis of Proposed Rulemaking* included in this docket.

We have determined that the final rule is not a significant energy action under that order since it is not likely to have a significant adverse effect on the supply, distribution, or use of energy. Therefore, a Statement of Energy Effects is not required.

Executive Order 12898 (Environmental Justice)

Executive Order 12898 requires that each Federal agency make achieving environmental justice part of its mission by identifying and addressing, as appropriate, disproportionately high and adverse human health or environmental effects of its programs, policies, and activities on minorities and low-income populations. The FHWA has determined that this final rule does not raise any environmental justice issues.

Regulation Identification Number

A regulation identification number (RIN) is assigned to each regulatory action listed in the Unified Agenda of Federal Regulations. The Regulatory Information Service Center publishes the Unified Agenda in April and October of each year. The RIN contained in the heading of this document can be used to cross-reference this action with the Unified Agenda.

List of Subjects in 23 CFR Part 511

Grant programs—transportation, Highway traffic safety, Highways and roads, Transportation, Travel, Travel restrictions.

Issued on: October 22, 2010.

Victor M. Mendez,

Administrator.

■ In consideration of the foregoing, FHWA adds a new part 511, to Title 23, Code of Federal Regulations, to read as follows:

PART 511—REAL-TIME SYSTEM MANAGEMENT INFORMATION PROGRAM

Subpart A—[Reserved]

Subpart B—[Reserved]

Subpart C—Real-Time System Management Information Program

Sec.
511.301 Purpose.
511.303 Definitions.
511.305 Policy.
511.307 Eligibility for Federal funding.
511.309 Provisions for traffic and travel conditions reporting.
511.311 Real-time information program establishment.
511.313 Metropolitan area real-time information program supplement.
511.315 Program administration.

Authority: Section 1201, Pub. L. 109–59; 23 U.S.C. 315; 23 U.S.C. 120; 49 CFR 1.48.

Subpart A—[Reserved]

Subpart B—[Reserved]

Subpart C—Real-Time System Management Information Program

§ 511.301 Purpose.

The purpose of this part is to establish the provisions and parameters for the Real-Time System Management Information Program. These provisions implement Subsections 1201(a)(1), (a)(2), and (c)(1) of the Safe, Accountable, Flexible, Efficient Transportation Equity Act: A Legacy for Users (SAFETEA–LU) (Pub. L. 109–59; 119 Stat. 1144), pertaining to Congestion Relief.

§ 511.303 Definitions.

Unless otherwise specified in this part, the definitions in 23 U.S.C. 101(a) are applicable to this subpart. As used in this part:

Accuracy means the measure or degree of agreement between a data value or set of values and a source assumed to be correct.

Availability means the degree to which data values are present in the attributes (*e.g.,* speed and travel time are attributes of traffic) that require them. Availability is typically described in terms of percentages or number of data values.

Congestion means the level at which transportation system performance is unacceptable due to excessive travel times and delays.

Data quality means the fitness of data for all purposes that require such data.

Full construction activities mean roadway construction or maintenance activities that affect travel conditions by closing and reopening roadways or lanes.

Metropolitan areas means the geographic areas designated as Metropolitan Statistical Areas by the Office of Management and Budget in the Executive Office of the President with a population exceeding 1,000,000 inhabitants.

Real-time information program means the program by which States gather and make available the data for traffic and travel conditions. Such means may involve State-only activity (including cooperative activities engaging multiple State agencies), State partnership with commercial providers of value-added information products, or other effective means that enable the State to satisfy the provisions for traffic and travel time conditions reporting stated in this section.

Routes of significance are non-Interstate roadways in metropolitan areas that are designated by States as meriting the collection and provision of information related to traffic and travel conditions. Factors to be considered in designating routes of significance include roadway safety (*e.g.,* crash rate, routes affected by environmental events), public safety (*e.g.,* routes used for evacuations), economic productivity, severity and frequency of congestion, and utility of the highway to serve as a diversion route for congestion locations. All public roadways including arterial highways, toll facilities and other facilities that apply end user pricing mechanisms shall be considered when designating routes of significance. In identifying these routes, States shall apply the collaborative practices and procedures that are used for compliance with 23 CFR part 940 and 23 CFR part 420.

Statewide incident reporting system means a statewide system for facilitating the real-time electronic reporting of surface transportation incidents to a central location for use in monitoring the event, providing accurate traveler information, and responding to the incident as appropriate. This definition is consistent with Public Law 109–59; 119 Stat. 1144, Section 1201(f).

Timeliness means the degree to which data values or a set of values are provided at the time required or specified.

Traffic and travel conditions means the characteristics that the traveling public experiences. Traffic and travel conditions include, but are not limited to, the following characteristics:

(1) Road or lane closures because of construction, traffic incidents, or other events;

(2) Roadway weather or other environmental conditions restricting or adversely affecting travel; and

(3) Travel times or speeds on limited access roadways in metropolitan areas that experience recurring congestion.

Validity means the degree to which data values fall within the respective domain of acceptable values.

Value-added information products means crafted products intended for commercial use, for sale to a customer base, or for other commercial enterprise purposes. These products may be derived from information gathered by States and may be created from other party or proprietary sources. These products may be created using the unique means of the value-added information provider.

§ 511.305 Policy.

This part establishes the provisions and parameters for the Real-Time System Management Information Program for State DOTs, other responsible agencies, and partnerships with other commercial entities in establishing real-time information programs that provide accessibility to traffic and travel conditions information by other public agencies, the traveling public, and by other parties who may deliver value-added information products.

§ 511.307 Eligibility for Federal funding.

(a) Subject to project approval by the Secretary, a State may obligate funds apportioned to the State under Title 23 U.S.C. sections 104(b)(1), also known as National Highway System funds, 104(b)(2), also known as CMAQ Improvement funds, and 104(b)(3), also known as STP funds, for activities relating to the planning, deployment and operation, including preventative maintenance, of real-time monitoring elements that advance the goals and purposes of the Real-Time System Management Information Program. The SPC funds, apportioned according to 23 U.S.C. 505(a), may be applied to the development and implementation of a real-time information program.

(b) Those project applications to establish a real-time information program solely for Interstate System highways are entitled to a Federal share of 90 percent of the total project cost, pursuant to 23 U.S.C. 120(a). Those project applications to establish a real-time information program for non-Interstate highways are entitled to a Federal share of 80 percent of the total project cost, as per 23 U.S.C. 120(b).

§ 511.309 Provisions for traffic and travel conditions reporting.

(a) Minimum requirements for traffic and travel conditions made available by real-time information programs are:

(1) *Construction activities.* The timeliness for the availability of information about full construction activities that close or reopen roadways or lanes will be 20 minutes or less from the time of the closure for highways outside of Metropolitan Areas. For roadways within Metropolitan Areas, the timeliness for the availability of information about full construction activities that close or reopen roadways or lanes will be 10 minutes or less from the time of the closure or reopening. Short-term or intermittent lane closures of limited duration that are less than the required reporting times are not included as a minimum requirement under this section.

(2) *Roadway or lane blocking incidents.* The timeliness for the availability of information related to roadway or lane blocking traffic incidents will be 20 minutes or less from the time that the incident is verified for highways outside of Metropolitan Areas. For roadways within Metropolitan Areas, the timeliness for the availability of information related to roadway or lane blocking traffic incidents will be 10 minutes or less from the time that the incident is verified.

(3) *Roadway weather observations.* The timeliness for the availability of information about hazardous driving conditions and roadway or lane closures or blockages because of adverse weather conditions will be 20 minutes or less from the time the hazardous conditions, blockage, or closure is observed.

(4) *Travel time information.* The timeliness for the availability of travel time information along limited access roadway segments within Metropolitan Areas, as defined under this subpart, will be 10 minutes or less from the time that the travel time calculation is completed.

(5) *Information accuracy.* The designed accuracy for a real-time information program shall be 85 percent accurate at a minimum, or have a maximum error rate of 15 percent.

(6) *Information availability.* The designed availability for a real-time information program shall be 90 percent available at a minimum.

(b) Real-time information programs may be established using legacy monitoring mechanisms applied to the highways, using a statewide incident reporting system, using new monitoring mechanisms applied to the highways, using value-added information products, or using a combination of monitoring mechanisms and value-added information products.

§ 511.311 Real-time information program establishment.

(a) *Requirement.* States shall establish real-time information programs that are consistent with the parameters defined under § 511.309. The real-time information program shall be established to take advantage of the existing traffic and travel condition monitoring capabilities, and build upon them where applicable. The real-time information program shall include traffic and travel condition information for, as a minimum, all the Interstate highways operated by the State. In addition, the real-time information program shall complement current transportation performance reporting systems by making it easier to gather or enhance required information.

(b) *Data quality.* States shall develop the methods by which data quality can be ensured to the data consumers. The criteria for defining the validity of traffic and travel conditions made available from real-time information programs shall be established by the States in collaboration with their partners for establishing the programs. States shall receive FHWA's concurrence that the selected methods provide reasonable checks of the quality of the information made available by the real-time information program. In requesting FHWA's concurrence, the State shall demonstrate to FHWA how the selected methods gauge the accuracy and availability of the real-time information and the remedial actions if the information quality falls below the levels described in § 511.309(a)(5) and § 511.309(a)(6).

(c) *Participation.* The establishment, or the enhancement, of a real-time information program should include participation from the following agencies: Highway agencies; public safety agencies (*e.g.,* police, fire, emergency/medical); transit operators; and other operating agencies necessary to sustain mobility through the region and/or the metropolitan area. Nothing in this subpart is intended to alter the existing relationships among State, regional, and local agencies.

(d) *Update of Regional ITS Architecture.* All States and regions that have created a Regional ITS Architecture in accordance with Section 940 in Title 23 CFR shall evaluate their Regional ITS Architectures to determine whether the Regional ITS Architectures explicitly address real-time highway and transit information needs and the methods needed to meet such needs. Traffic and travel conditions monitoring needs for all Interstate system highways shall be considered. If necessary, the Regional ITS Architectures shall be updated to address coverage, monitoring systems, data fusion and archiving, and accessibility to highway and transit information for other States and for value added information product providers. The Regional ITS Architecture shall feature the components and functionality of the real-time information program.

(e) *Effective date.* Establishment of the real-time information program for traffic and travel conditions on the Interstate system highways shall be completed no later than November 8, 2014.

§ 511.313 Metropolitan Area real-time information program supplement.

(a) *Applicability.* Metropolitan Areas as defined under this subpart.

(b) *Requirement.* Metropolitan Areas shall establish a real-time information program for traffic and travel conditions reporting with the same provisions described in § 511.311.

(c) *Routes of significance.* States shall designate metropolitan areas, non-Interstate highways that are routes of significance as defined under this subpart. In identifying the metropolitan routes of significance, States shall collaborate with local or regional agencies using existing coordination methods. Nothing in this subpart is intended to alter the existing relationships among State, regional, and local agencies.

(d) *Effective date.* Establishment of the real-time information program for traffic and travel conditions reporting along the Metropolitan Area Interstate system highways shall be completed no later than November 8, 2014. Establishment of the real-time information program for traffic and travel conditions reporting along the State-designated metropolitan area routes of significance shall be completed no later than November 8, 2016.

§ 511.315 Program administration.

Compliance with this subpart will be monitored under Federal-aid oversight procedures as provided under 23 U.S.C. 106 and 133, 23 CFR 1.36, and 23 CFR 940.13.

[FR Doc. 2010–27987 Filed 11–5–10; 8:45 am]

BILLING CODE 4910–22–P

DEPARTMENT OF LABOR

Occupational Safety and Health Administration

29 CFR Part 1926

[Docket No. OSHA–2007–0066]

RIN 1218–AC01

Cranes and Derricks in Construction; Approval of Information Collection Requirements

AGENCY: Occupational Safety and Health Administration (OSHA), Department of Labor.

ACTION: Final rule; notice of the Office of Management and Budget's (OMB) approval of information collection requirements.

SUMMARY: On August 9, 2010, OSHA published a final rule revising the Cranes and Derricks Standard and related sections of the Construction Standard to update and specify industry work practices necessary to protect employees during the use of cranes and derricks in construction. That final standard also addressed advances in the designs of cranes and derricks, related hazards, and the qualifications of employees needed to operate them safely. Those requirements contained information collection requirements for which approval was needed from the Office of Management and Budget. This document announces that OMB has approved those collection of information requirements and makes the appropriate regulatory change to reflect that approval. The OMB approval number is 1218–0261.

DATES: Effective November 8, 2010.

FOR FURTHER INFORMATION CONTACT: Todd Owen, OSHA, Directorate of Standards and Guidance, Room N–3609, U.S. Department of Labor, 200 Constitution Avenue, NW., Washington, DC 20210; telephone (202) 693–2222.

SUPPLEMENTARY INFORMATION: OSHA published a final rule for the Cranes and Derricks in Construction standard on August 9, 2010 (75 FR 47905–48177), after determining that hazards related to cranes and derricks used in construction pose a significant risk of injury or death to employees in the workplace. These requirements are necessary to provide protection from these hazards. The final rule becomes effective on November 8, 2010. As required by the Paperwork Reduction Act of 1995 (PRA–95) (44 U.S.C. 3501–3520), the **Federal Register** notice for the Cranes and Derricks in Construction final rule states that employers do not have to comply with the collection of information requirements until OMB approves those collection of information requirements and the Department of Labor publishes a notice in the **Federal Register** announcing this approval and the control number assigned by OMB to the Cranes and Derricks in Construction's collection of information requirements. Under 5 CFR 1320.5(b), an agency may not conduct or sponsor a collection of information unless: (1) The collection of information displays a current valid OMB control number and (2) the agency informs members of the public required to respond to the collection of information that they are not required to do so unless the agency displays a currently valid OMB control number for the collection of information.

On August 9, 2010, the Department of Labor submitted the Cranes and Derricks in Construction information collection request for the final rule to OMB for approval in accordance with PRA–95. On November 1, 2010, OMB approved the collections of information contained in the final rule and assigned these collections of information OMB Control Number 1218–0261, titled "Cranes and Derricks in Construction (29 CFR part 1926, subpart CC)." The approval for collecting the information expires on November 30, 2013.

The final Cranes and Derricks standard imposes new information collection requirements for purposes of PRA–95. These requirements impose a duty to produce and maintain records on employers that implement controls and take other measures to protect workers from hazards related to cranes and derricks used in construction. Accordingly, construction businesses with employees who operate or work in the vicinity of cranes and derricks must have, as applicable, the following documents on file and available at the job site: Equipment ratings, employee training records, written authorizations from qualified individuals, and qualification program audits. During an inspection, OSHA will have access to the records to determine compliance under conditions specified by the standard. An employer's failure to generate and disclose the information required in this standard will affect significantly the Agency's effort to control and reduce injuries and fatalities related to the use of cranes and derricks in construction.

The table below identifies the new collections of information contained in the final rule.

COLLECTION OF INFORMATION REQUIREMENTS IN THE FINAL STANDARD

29 CFR 1926.1402(c)(2)	29 CFR 1926.1427(c)(1)(ii).
29 CFR 1926.1403(b) and 1926.1406(b)	29 CFR 1926.1427(c)(2)(i).
29 CFR 1926.1404(f)(2)	29 CFR 1926.1427(c)(5)(ii) and (c)(5)(iv).
29 CFR 1926.1404(j)	29 CFR 1926.1427(c)(5)(iii).
29 CFR 1926.1404(m)(1)(i)	29 CFR 1926.1427(h)(1)(i) and (ii).

COLLECTION OF INFORMATION REQUIREMENTS IN THE FINAL STANDARD—Continued

29 CFR 1926.1407(a)(1)(i), (a)(3)(i), (c), (d), (e), (f), and 1926.1409	29 CFR 1926.1428(a)(1), (a)(2), and (a)(3).
29 CFR 1926.1407(g) and 1926.1409	29 CFR 1926.1428(b).
29 CFR 1926.1408 Table A and 1926.1409(b)	29 CFR 1926.1431(o)(3)(i).
29 CFR 1926.1408(a)(2)(i), (2)(iii)(A), (c), (d)(1), (e), and 1926.1409	29 CFR 1926.1431(p)(4)(i).
29 CFR 1926.1410(c)(1)	29 CFR 1926.1431(r)(3)(i).
29 CFR 1926.1410(d)	29 CFR 1926.1431(s)(3)(i).
29 CFR 1926.1410(e)	29 CFR 1926.1433(e).
29 CFR 1926.1410(f)	29 CFR 1926.1434(a)(1)(i), (a)(1)(ii), (a)(3), 1926.1404(m)(1)(ii), 1926.1441(b)(2)(i)(B).
29 CFR 1926.1410(j)	29 CFR 1926.1434(a)(2)(i), (a)(3), (a)(4), (a)(5), (b), and 1926.1441(b)(2)(i)(B).
29 CFR 1926.1411 Table T	29 CFR 1926.1435(b)(3).
29 CFR 1926.1412(a)(1)(i)	29 CFR 1926.1435(b)(7)(ii).
29 CFR 1926.1412(b) (1)(ii)(A)	29 CFR 1926.1435(c)(5).
29 CFR 1926.1412(c)(2)(i)	29 CFR 1926.1435(f)(3)(ii).
29 CFR 1926.1412(e)(3)(i), (e)(2)(i), (e)(3)(ii), (f)(6), (g)(3),(h), 1926.1413(b)(4), (c)(3)(ii), and 1926.1437(h)	29 CFR 1926.1436(g)(4).
29 CFR 1926.1412(f)(7), 1926.1413(c)(4), and 1926.1437(h)	29 CFR 1926.1437(c)(2)(ii).
29 CFR 1926.1413(a)(4)(ii)(A)	29 CFR 1926.1437(h)(6).
29 CFR 1926.1414(e)(2)(iii)	29 CFR 1926.1437(m)(4).
29 CFR 1926.1414(e)(3)(iii)	29 CFR 1926.1437(n)(2).
29 CFR 1926.1417(b)(1) and (b)(2)	29 CFR 1926.1437(n)(5)(v).
29 CFR 1926.1417(b)(3)	29 CFR 1926.1437(n)(6)(i).
29 CFR 1926.1417(j)(1)	29 CFR 1926.1441(b)(2)(i)(A).
29 CFR 1926.1417(j)(2)	29 CFR 1926.1441(c)(2)(i).
29 CFR 1926.1423(j)(2)	29 CFR 1926.1441(c)(2)(ii).
29 CFR 1926.1424(a)(2)(ii)	29 CFR 1926.1441(c)(2)(iii).
29 CFR 1926.1424(a)(3)(i) and (ii)	29 CFR 1926.1441(c)(3)(ii).
29 CFR 1926.1427(a) and (e)(1).	

Affected Public: Business or other for-profits.

Number of Respondents: 267,032 firms.

Frequency: On occasion (for most of the information collection requirements; determined by the use of cranes and derricks and employee training and certification); annually (for equipment inspections).

Average Time per Response: Varies from 30 seconds (communicate employee's location to operator) to 1.5 hours (develop and document written assembly and disassembly procedures).

Estimated Total Burden Hours: 403,413 hours.

Estimated Costs (Operation and Maintenance): $2.3 million.

Authority and Signature

David Michaels, PhD, MPH, Assistant Secretary of Labor for Occupational Safety and Health, directed the preparation of this notice. The authority for this notice is the Paperwork Reduction Act of 1995 (44 U.S.C. 3506 *et seq.*) and Secretary of Labor's Order No. 4–2010 (75 FR 55355).

Signed at Washington, DC, this 1st day of November 2010.

David Michaels,

Assistant Secretary of Labor for Occupational Safety and Health.

■ For the reasons stated in the preamble in this notice, the Occupational Safety and Health Administration amends 29 CFR part 1926 to read as follows:

PART 1926—[AMENDED]

Subpart A—General

■ 1. Revise the authority citation for subpart A to read as follows:

Authority: Sec. 3704, Contract Work Hours and Safety Standards Act (40 U.S.C. 3701 *et al.*); secs. 4, 6, and 8, Occupational Safety and Health Act of 1970 (29 U.S.C. 653, 655, 657); Secretary of Labor's Order No. 12–71 (36 FR 8754), 8–76 (41 FR 25059), 9–83 (48 FR 35736), 6–96 (62 FR 111), 5–2007 (72 FR 31160), and 4–2010 (75 FR 55355), as applicable; and 29 CFR part 1911.

■ 2. Amend § 1926.5 by adding to the table, in the proper numerical sequence, the following citations and OMB control number to read as follows:

§ 1926.5 OMB control numbers under the Paperwork Reduction Act.

* * * * *

29 CFR citation	OMB control No.
* * * * *	
1926.1402	1218–0261
1926.1403	1218–0261
1926.1404	1218–0261
1926.1406	1218–0261
1926.1407	1218–0261
1926.1408	1218–0261
1926.1409	1218–0261
1926.1410	1218–0261
1926.1411	1218–0261
1926.1412	1218–0261
1926.1413	1218–0261
1926.1414	1218–0261
1926.1417	1218–0261
1926.1423	1218–0261
1926.1424	1218–0261
1926.1427	1218–0261
1926.1428	1218–0261
1926.1431	1218–0261
1926.1433	1218–0261
1926.1434	1218–0261
1926.1435	1218–0261
1926.1436	1218–0261
1926.1437	1218–0261
1926.1441	1218–0261

[FR Doc. 2010–27947 Filed 11–5–10; 8:45 am]

BILLING CODE 4510–26–P

POSTAL SERVICE

39 CFR Part 111

Domestic Shipping Services Pricing and Mailing Standards Changes

AGENCY: Postal Service™.

ACTION: Final rule.

SUMMARY: The Postal Service is revising *Mailing Standards of the United States Postal Service,* Domestic Mail Manual (DMM®), to reflect changes to prices and mailing standards for the following Shipping Services: Express Mail®; Priority Mail®; Parcel Select®; Recipient Services.

DATES: *Effective Date:* January 2, 2011.

FOR FURTHER INFORMATION CONTACT: John Gullo (202) 268–8057 or Carol A. Lunkins (202) 268–7262.

SUPPLEMENTARY INFORMATION: This final rule describes new prices and product features for Shipping Services, by class of mail, established by the Governors of the United States Postal Service®. New prices are located on the Postal Explorer® Web site at *http://pe.usps.com.*

General

The Postal Service revises the procedure for determining single-piece weight for all classes of mail. When computing and determining single-piece prices based on weight, express all weights in decimal pounds rounded off to two decimal places instead of four decimal places. Mailers using the Electronic Verification System (eVS®) may round off to four decimals, and eVS will automatically round to the appropriate decimal place. If a mailer is using a manifest mailing system (MMS), the manifest weight field must be properly completed by adhering to the rules relative to the specific MMS.

Express Mail

The Postal Service implements Express Mail structural revisions and expands product offerings for retail, commercial base, and commercial plus categories.

Express Mail Revisions

Express Mail revisions include: Calculation of postage, IBI postage meter eligibility, and a reduction in account volume thresholds.

Calculating Postage

When computing and determining Express Mail single-piece prices based on weight, express all weights in decimal pounds rounded off to two decimal places instead of four decimal places.

IBI Postage Meters

For Express Mail commercial base prices, customers using USPS®-approved Information-Based Indicia (IBI) postage meters must print the IBI with the appropriate price marking ("Commercial Base Price," "Commercial Base Pricing," or "ComBasPrice") and electronically transmit transactional data to USPS. Also, each mailpiece must bear an approved Express Mail shipping label.

IBI postage meters that do not print the IBI with the appropriate price marking and electronically transmit transactional data to USPS no longer qualify for commercial base prices.

Account Volume Thresholds

The Express Mail commercial plus cumulative account volume threshold is lowered from 6,000 pieces in the previous four quarters to 5,000 pieces and is available for customers whose cumulative account volume exceeds 5,000 pieces or who have a customer commitment agreement with USPS.

New Express Mail Offerings

New Express Mail offerings include: Express Mail Legal Flat Rate Envelope and commercial plus prices for customers using IBI postage meters.

Express Mail Legal Flat Rate Envelope

Express Mail flat-rate options are expanded to include a new Legal Flat Rate Envelope which is available to retail, commercial base, and commercial plus customers. The USPS-produced Legal Flat Rate Envelope is not available at retail Post Office locations but may be ordered online at *http://www.usps.com/shop.*

Express Mail Commercial Plus Prices—IBI Postage Meters

Express Mail commercial plus pricing is now available for customers using USPS-approved IBI postage meters when the following conditions are met:

- IBI postage meters must print the appropriate price marking ("Commercial Plus Price," "Commercial Plus Pricing," or "ComPlsPrice").
- IBI postage meters must electronically transmit transactional data daily to USPS for all mailpieces and mail categories.
- The cumulative account volume must exceed 5,000 pieces in the previous four quarters or who have a customer commitment agreement with USPS.
- Each item must bear an approved Express Mail shipping label.

Priority Mail

The Postal Service implements Priority Mail structural revisions and expands product offerings for retail, commercial base, and commercial plus categories.

Priority Mail Revisions

Priority Mail revisions include: flat-rate pricing of Priority Mail envelopes smaller than 12.5″ x 9.5″; defining eligible Priority Mail envelopes; and calculation of postage.

Price Application

All domestic USPS-produced Priority Mail envelopes smaller than 12.5″ x 9.5″ will be priced the same as the regular Priority Mail Flat Rate Envelope including envelopes that do not bear the wording, "Flat Rate Envelope."

Eligibility

The Priority Mail Flat Rate Envelope options are expanded to include the following: Gift Card Flat Rate Envelope, Window Flat Rate Envelope, and Small Flat Rate Envelope.

Calculating Postage

When computing and determining Priority Mail single-piece prices based on weight, express all weights in decimal pounds rounded off to two decimal places instead of four decimal places.

New Priority Mail Offerings

New Priority Mail offerings include: Priority Mail Legal Flat Rate Envelope, Priority Mail Padded Flat Rate Envelope, and Hold For Pickup service.

Priority Mail Legal Flat Rate Envelope

The Priority Mail Legal Flat Rate Envelope (15″ x 9.5″) is available for retail, commercial base, and commercial plus customers. All postage payment methods per price category and extra services available for Priority Mail are available with this offering. The USPS-produced Priority Mail Legal Flat Rate Envelope is not available at retail Post Office locations but may be ordered online at *http://www.usps.com/shop.*

Priority Mail Padded Flat Rate Envelope

The Priority Mail Padded Flat Rate Envelope (12.5″ x 9.5″) previously available only for commercial plus customers is now available to retail and commercial base customers. All postage payment methods per price category (including BRM pieces returned at Priority Mail prices) are available with this offering; all extra services available for Priority Mail are available with this offering with the exception of Registered Mail™ service. The USPS-produced Priority Mail Padded Flat Rate Envelope is not available at retail Post Office locations but may be ordered online at *http://www.usps.com/shop.*

Hold For Pickup

Hold For Pickup service is available for all online and commercial Priority Mail except Critical Mail™. For detailed information, *see* the section below entitled, "Hold For Pickup."

Priority Mail Commercial Base

Priority Mail commercial base revisions include: IBI postage meters and postal routing barcodes.

IBI Postage Meters

Customers using USPS-approved IBI postage meters must print the IBI with

the appropriate price marking ("Commercial Base Price," "Commercial Base Pricing," or "ComBasPrice") and electronically transmit transactional data to USPS.

IBI postage meters that do not print the IBI with the appropriate price marking and electronically transmit transactional data to USPS will no longer qualify for commercial base prices.

Postal Routing Barcodes

For Priority Mail commercial base prices, the Postal Service has eliminated the requirement for a postal routing barcode when paying postage with permit imprint.

New Priority Mail Commercial Base Offerings

New Priority Mail commercial base offerings include: Priority Mail Legal Flat Rate Envelope, Priority Mail Padded Flat Rate Envelope, and Priority Mail Regional Rate Box.

Priority Mail Legal Flat Rate Envelope

The Priority Mail Legal Flat Rate Envelope (15″ x 9.5″) is available for commercial base customers. All postage payments methods and extra services available for commercial base Priority Mail are available with this offering.

Priority Mail Padded Flat Rate Envelope

The Priority Mail Padded Flat Rate Envelope (12.5″ x 9.5″) is now available for commercial base customers. All postage payment methods (including BRM pieces returned at Priority Mail prices) and extra services available for commercial base Priority Mail are available with this offering with the exception of Registered Mail service.

Priority Mail Regional Rate Box

Description

The Priority Mail Regional Rate Box is a new product offering available for Priority Mail commercial parcels and Merchandise Return Service (MRS) parcels returned at Priority Mail prices. The Regional Rate Box is available for Priority Mail commercial base and commercial plus customers. This offering is not available for mailers using BRM, Parcel Return Service (PRS), or for customers who pay postage at retail Post Office™ locations.

Eligibility

Customers must use USPS-produced Priority Mail Regional Rate Boxes to qualify for Regional Rate Box prices.

Price Application

Priority Mail Regional Rate Box prices are based on USPS-produced "Box A" or "Box B" and the destination zone. If the Priority Mail Regional Rate Box exceeds the maximum weight for that particular box, Priority Mail commercial base or commercial plus (volume thresholds apply) prices will be assessed based on weight and zone.

Options

There are two Regional Rate Box types "A" and "B" which include two loading options:

- Box A (top loading or side loading) has a 15-pound maximum weight limit.
- Box B (top loading or side loading) has a 20-pound maximum weight limit.

Account Volume Threshold

No minimum volume threshold applies, except the permit imprint requirement of 200 pieces or 50 pounds of mail.

Extra Services

All extra services that are available with Priority Mail may be used with the Regional Rate Box.

Postage Payment Methods

Priority Mail Regional Rate Box prices are available to Priority Mail customers that are:

- Customers using Click-N-Ship service.
- Registered end-users of USPS-approved PC Postage products when using a qualifying shipping label managed by the PC Postage system used.
- Customers using permit imprint.
- Customers using USPS-approved IBI postage meters that print the IBI with the appropriate price marking ("Commercial Base Price," "Commercial Base Pricing," or "ComBasPrice") and electronically transmit transactional data to USPS.
- Permit holders using MRS for Priority Mail pieces when all MRS requirements are met.
- Commercial plus customers meeting Priority Mail commercial plus account volume and postage payment requirements.

Packaging

USPS-produced Priority Mail Regional Rate Boxes must be used only for Priority Mail Regional Rate Box service. Customers may order these boxes online at *http://www.usps.com/shop.*

Priority Mail Commercial Plus

The Postal Service implements Priority Mail commercial plus structural revisions and expands product offerings to include: New and revised account volume thresholds; the availability of commercial plus prices for customers who pay postage using IBI postage meters; and the requirement to use a postal routing barcode.

Account Volume Thresholds

Unless customers have a customer commitment agreement with USPS, the availability of commercial plus prices require minimum volumes as follows:

- *Letters & Flats:* The cumulative account volume must exceed 5,000 letter-size and flat-size (including Flat Rate Envelopes) pieces in the previous calendar year. Padded Flat Rate Envelopes may not be included to meet the cumulative account volume.
- *Overall:* The cumulative account volume must exceed 75,000 total pieces (letters, flats, and parcels) in the previous calendar year. This threshold is reduced from 100,000 to 75,000 total pieces.

IBI Postage Meters

Priority Mail Commercial Plus, except Cubic and Critical Mail, pricing is now available to customers who use USPS-approved IBI postage meters that print the IBI with the appropriate price marking ("Commercial Plus Price," "Commercial Plus Pricing," or "ComPlsPrice"), electronically transmit transactional data daily to USPS for all mailpieces and mail categories, and meet the cumulative account volumes listed above.

Postal Routing Barcode

The Postal Service has eliminated the requirement for a postal routing barcode for Priority Mail commercial plus pieces when paying postage with permit imprint.

New Priority Mail Commercial Plus Offerings

Priority Mail new commercial plus product offerings include: Priority Mail Legal Flat Rate Envelope and Critical Mail.

Priority Mail Legal Flat Rate Envelope

The new Priority Mail Legal Flat Rate Envelope, which is 15″ x 9.5″ in size, is available for commercial plus customers who meet Priority Mail commercial plus volume requirements and pay postage with authorized postage payment methods. All extra services available for commercial plus Priority Mail are available with this offering.

Critical Mail

Description

Critical Mail is a new shipping option for Priority Mail commercial plus mailers. This new product is a category of Priority Mail and is available for automation-compatible letters and

automation flats bearing Intelligent Mail® barcodes (IMb™). Delivery Confirmation™ service (electronic option), which allows mailers to confirm delivery, is included at no additional cost.

Price Application

Critical Mail pieces are charged a flat rate regardless of domestic destination or weight for automation-compatible letters up to 3 ounces and automation-compatible flats up to 13 ounces. Critical Mail entered as letter-size envelopes that exceed 3 ounces, ¼-inch thickness, or do not meet automation letter standards will be charged the Priority Mail Commercial Plus Flat Rate Envelope price. Critical Mail entered as flat-size envelopes that exceed 13 ounces, ¾-inch thickness, or do not meet the standards for automation flats will be charged the Priority Mail Commercial Plus Flat Rate Envelope price. Critical Mail envelopes are provided free of charge by USPS and must be used only for Critical Mail.

Eligibility

Each mailpiece must be either an automation-compatible letter or automation flat, bear an accurate IMb with the correct routing code that represents the finest depth of sort achieved in the address matching process, and meet the following criteria:

- Critical Mail letters must not exceed 3 ounces in weight and ¼-inch thickness.
- Critical Mail flats must not exceed 13 ounces in weight and ¾-inch thickness.

Account Volume Threshold

Critical Mail prices are available to mailers whose Priority Mail account volumes exceed 5,000 letter-size and flat-size (including Flat Rate Envelopes, but not the Padded Flat Rate Envelope) mailpieces in the previous calendar year or who have a customer commitment agreement with USPS.

Authorization

To qualify for Critical Mail prices, all customers must have a customer commitment agreement with USPS. Customers must contact their account manager or the Manager, Shipping Support, Shipping Services.

Additionally, USPS-produced Critical Mail envelopes must be used and mailpieces must be authorized by USPS Manager, Integrated Business Solutions. Prior to the first mailing of Critical Mail, 10 mailpiece samples must be provided to USPS Manager, Integrated Business Solutions or designee for review and approval. Mailpiece samples must be packaged in USPS-produced Critical Mail letter-size or flat-size envelopes; include the full range of the proposed contents that will be shipped; and bear applicable labels and barcodes, *i.e.* Intelligent Mail barcodes (IMb), Delivery Confirmation labels, and Signature Confirmation™ labels, etc.

Extra Services

The following extra services may be used with Critical Mail service: Insured mail, Signature Confirmation, and Delivery Confirmation.

Postage Payment Methods

The following postage payment methods are available to Critical Mail customers whose letter-size or flat-size Priority Mail or Critical Mail volume (including Flat Rate Envelopes, but not the Padded Flat Rate Envelope) exceeds 5,000 pieces in the previous calendar year, or who have a customer commitment agreement. Prices are available to:

- Registered end-users of USPS-approved PC Postage® products.
- Customers using permit imprint.

Markings

When using a mail category on Critical Mail pieces paid with permit imprint, the mailpiece must bear the mail category, "Critical Mail." This marking must be placed in the permit imprint indicia. In addition, all other required wording must be placed in the indicia as applicable, *i.e.* "U.S. Postage Paid," city and state, and permit number.

Preparation & Packaging

When shipping Critical Mail items, customers are required to use only USPS-produced Critical Mail envelopes. Critical Mail envelopes are provided by USPS and must be used only for Critical Mail. Authorized customers may order these envelopes online at *http://www.usps.com/shop.*

The sender's domestic return address must appear legibly on the side of the mailpiece bearing postage. When manifested, Critical Mail and Priority Mail may be entered on the same postage statement, but mailpieces must be presented separately and may not be combined or commingled in the same container.

When mailing 200 or more Critical Mail letters or flats, trays must be labeled according to automation standards and the following conditions must be met:

Letters

- Letters must be prepared in USPS-provided letter trays; "faced" (oriented with all addresses in the same direction with the postage area in the upper right) in trays; and trays must be covered with sleeves.

Flats

- Flats must be prepared in USPS-provided flat trays; positioned in trays with addresses facing upward in the same direction; trays must be covered with green lids; strapped, and not exceed 70 pounds.

Pickup & Acceptance

Critical Mail may be accepted and deposited as follows: Mailings with postage paid by PC Postage may be deposited in collection boxes (except for mailings of 200 or more pieces); provided to a carrier via Carrier Pickup™ service, Pickup on Demand service, or entered at Post Office locations. For permit imprint mailings, unless eVS is used, postage statements must be electronically submitted; all mailings must be deposited and accepted at the Post Office that issued the permit at a time and place designated by the postmaster, except as otherwise provided for eVS® or plant-verified drop shipments.

Priority Mail Commercial Plus Cubic

The Postal Service revises the Priority Mail commercial plus cubic requirements to include: Eligibility and mailpiece compatibility with our processing equipment; calculation of postage; availability of commercial plus cubic prices to MRS customers; and use of preprinted dimensions printed on USPS-produced packaging.

Eligibility

Rolls or tubes are not eligible for commercial plus cubic prices. Additionally, each eligible mailpiece must measure 0.50 cubic foot or less, weigh 20 pounds or less, and the longest dimension cannot exceed 18 inches in length. A customer's cumulative account volume remains unchanged and must exceed 250,000 pieces or the customer must have a customer commitment agreement with USPS.

Calculating Postage

When measuring pieces to calculate pricing tiers, any fraction of a measurement is *rounded down* to the nearest 0.25 inch instead of *rounding off* each measurement to the nearest whole inch.

Merchandise Return Service

Commercial Plus Cubic prices will now be available for customers using MRS parcels returned at Priority Mail prices, who qualify for commercial base

prices, and whose account volumes exceed 250,000 pieces in the previous calendar year or who have a customer commitment agreement with USPS.

Packaging

When USPS-produced packaging is used for Commercial Plus Cubic mailings, the preprinted cubic size printed on the packaging must be used when calculating postage. If USPS-produced packaging does not include the cubic size, the standard calculation should be used to determine the cubic size. Matter mailed in Priority Mail flat-rate packaging is not eligible for commercial plus cubic prices.

Parcel Select

The Postal Service revises Parcel Select standards to include: Hold For Pickup service, zoned 1-pound parcels prices, and the calculation of postage.

Hold For Pickup

Parcel Select Hold For Pickup service is limited to barcoded, nonpresorted parcels. For detailed information, see the section below on Hold For Pickup.

1-Pound Price

The 1-pound price for Parcel Select parcels is priced according to weight and the applicable zone. Previously, the price for all 1-pound parcels was the same across all zones.

Calculating Postage

When computing and determining single-piece prices based on weight, express all weights in decimal pounds rounded off to two decimal places instead of four decimal places.

Recipient Services

The Postal Service revises recipient services to include: Post Office Box and Hold For Pickup services.

Post Office Box Service

On June 17, 2010, the Postal Regulatory Commission approved the Postal Service's request to move Post Office (PO) Boxes in 49 retail Post Office locations to the competitive (Shipping Services) product list.

As part of the Shipping Services price change, PO Box™ fees in these 49 locations will be priced under a new fee group designated as Group C1.

New customers who rent PO Box service in Group C1 will not be required to pay a key deposit fee for the first two keys. If additional keys are requested, the key duplication fee will be charged.

New customers in Group C1 who pay for a 12-month rental period in advance will be given an additional month rental, at no extra charge, for a total of 13 months.

Hold For Pickup Service

The Postal Service expands Hold For Pickup service to include all online and commercial Priority Mail (except Critical Mail) and First-Class Mail commercial parcels. In addition, Parcel Select Hold For Pickup service is limited to barcoded, nonpresorted parcels.

Description

Hold For Pickup service allows mailpieces to be held at a designated Post Office location for pick up by a specified addressee or designee. Upon arrival of the mailpiece at the destination Post Office pickup location, the addressee will receive an email notification from the Postal Service. If the mailpiece has not been picked up within 5 days, the Post Office will make a second attempt to notify the addressee. If the package has not been picked up within 15 days, the mailpiece will be returned to the sender.

Eligibility

To qualify for Hold For Pickup, at a minimum, one of the authorized extra services must be combined with this offering, and all mailpieces must bear the Hold For Pickup label with an Intelligent Mail package barcode (IMpb) encoded with a correct ZIP+4 Code, matching the address and meeting the standards in 708.5.0, except for Express Mail not paid through the eVS.

For more detailed information regarding the IMpb, mailers may reference the addendum to Publication 91, *Addendum for Intelligent Mail Package Barcode (IMpb) and 3-Digit Service Type Code,* which may be accessed on the RIBBS® Web site at *ribbs.usps.gov.*

Options

There are two options for Hold For Pickup service:

- *Retail option:* Available at Post Office pickup locations for Express Mail only at the time of mailing.
- *Electronic option:* Available for Express Mail, Priority Mail (except Critical Mail), First-Class Mail parcels, and Parcel Select barcoded, nonpresorted parcels. Except for Express Mail, mailers must establish an electronic link with USPS to exchange acceptance and delivery data. No mailing receipt is provided with this option.

Extra Services

At least one of the following extra services must be combined with Hold For Pickup service: Insured mail, Delivery Confirmation, or Signature Confirmation. If adding insurance for $200 or less, one of the other authorized extra services must also be added.

Postage Payment Methods

Hold For Pickup service is available for customers using the following postage payment methods: Click-N-Ship, permit imprint, IBI postage meters, and USPS-approved PC Postage products when registered end-users use a qualifying shipping label managed by the PC Postage system used.

Resources

The Postal Service provides additional resources to assist customers with this price change for Shipping Services. These tools include price lists, downloadable price files, and domestic and international **Federal Register** Notices, which may be found on the Postal Explorer Web site at *http://pe.usps.com.*

In addition, IMpb requirements may be referenced by viewing the *Barcode, Package, Intelligent Mail (USPS2000508) Specification* and Publication 91, *Addendum for Intelligent Mail Package Barcode (IMpb) and 3-Digit Service Type Code,* which may be accessed in Intelligent Mail Services on the RIBBS® Web site at *http://ribbs.usps.gov.*

The Postal Service adopts the following changes to *Mailing Standards of the United States Postal Service,* Domestic Mail Manual (DMM), which is incorporated by reference in the Code of Federal Regulations. *See* 39 CFR 111.1.

List of Subjects in 39 CFR Part 111

Administrative practice and procedure, Postal Service.

■ Accordingly, 39 CFR part 111 is amended as follows:

PART 111—[AMENDED]

■ 1. The authority citation for 39 CFR part 111 continues to read as follows:

Authority: 5 U.S.C. 552(a); 13 U.S.C. 301–307; 18 U.S.C. 1692–1737; 39 U.S.C. 101, 401, 403, 404, 414, 416, 3001–3011, 3201–3219, 3403–3406, 3621, 3622, 3626, 3632, 3633, and 5001.

■ 2. Revise the following sections of *Mailing Standards of the United States Postal Service,* Domestic Mail Manual (DMM), as follows:

* * * * *

100 Retail Letters, Cards, Flats, and Parcels

* * * * *

110 Express Mail

113 Prices and Eligibility

1.0 Express Mail Prices and Fees

1.1 Prices Charged Per Piece

[Revise 1.1 as follows:]

Express Mail postage is charged for each addressed piece according to its weight and zone, except under 1.4.

1.2 Price Application

[Revise the first and last sentences of 1.2 by making envelope plural as follows:]

Except under 1.4, Flat Rate Envelopes, * * * Except for Express Mail Flat Rate Envelopes, Express Mail prices are based on weight and zone.

* * * * *

[Revise title text of item 1.4 by making envelope plural as follows:]

1.4 Flat Rate Envelopes

[Revise 1.4 by adding two subsections 1.4.1 and 1.4.2 as follows:]

1.4.1 Flat Rate Envelopes—Eligibility

Material mailed in USPS-provided Express Mail Flat Rate Envelopes is charged a flat rate, regardless of the actual weight (up to 70 pounds) of the mailpiece or domestic destination. Only USPS-produced Flat Rate Envelopes are eligible for the Flat Rate Envelope price. Custom Designed items are not eligible for flat-rate pricing. When sealing a Flat Rate Envelope, the container flaps must be able to close within the normal folds. Tape may be applied to the flaps and seams to reinforce the container provided the design of the container is not enlarged by opening the sides, and the container is not reconstructed in any way.

1.4.2 Flat Rate Envelopes—Price Eligibility

There are two types of USPS-produced Express Mail Flat Rate Envelopes: A regular-size envelope and a legal-size envelope. Each type of USPS-produced Express Mail Flat Rate Envelope is priced at a flat rate regardless of the actual weight (up to 70 pounds) of the mailpiece or domestic destination. See Notice 123—Price List for prices.

* * * * *

1.7 Computing Postage

[Revise paragraph of 1.7 as follows:]

For each addressed mailpiece, determine single-piece price based on weight and zone under 1.1; express all weights in decimal pounds rounded off to two decimal places. For Express Mail, affix postage to each piece under 114.1.2, Affixing Postage—Single-Piece Mailings.

* * * * *

115 Mail Preparation

1.0 Express Mail Supplies

1.1 Packaging Provided by USPS

[Add new last sentence to item 1.1 as follows:]

* * * The USPS-produced Express Mail Legal Flat Rate Envelope is not available at retail Post Office locations but may be ordered online at *http://www.usps.com/shop.*

* * * * *

120 Priority Mail

123 Prices and Eligibility

1.0 Priority Mail Prices and Fees

1.1 Price Application

[Revise paragraph of 1.1 as follows:]

Except under 1.3, 1.4, and 1.5, Priority Mail retail prices are based on weight and zone and are charged per pound; any fraction of a pound is rounded up to the next whole pound. For example, if a piece weighs 1.2 pounds, the weight (postage) increment is 2 pounds. The minimum postage amount per addressed piece is the 1-pound price. Other charges may apply.

* * * * *

[Revise the title of 1.5 to make envelope plural as follows:]

1.5 Flat Rate Envelopes and Boxes

* * * * *

[Revise the title of 1.5.1 to make envelope plural as follows:]

1.5.1 Flat Rate Envelopes—Price and Eligibility

[Revise text of 1.5.1 as follows:]

All USPS-produced Priority Mail envelopes smaller than the EP14F envelope (9.5 inches by 12.5 inches) are eligible for the Priority Mail Flat Rate Envelope price whether or not they are marked "Flat Rate Envelope." Each type of USPS-produced Priority Mail Flat Rate Envelope is priced at a flat rate regardless of the actual weight (up to 70 pounds) of the mailpiece or domestic destination. *See* Notice 123—Price List for applicable prices.

* * * * *

1.9 Determining Single-Piece Weight

[Revise the last sentence of 1.9 as follows:]

* * * Express all single-piece weights in decimal pounds rounded off to two decimal places.

* * * * *

125 Mail Preparation

1.0 Preparation

1.1 Priority Mail Packaging Provided by the USPS

[Add new last sentence of 1.1 as follows:]

* * * The USPS-produced Priority Mail Legal and Padded Flat Rate Envelopes are not available at retail Post Office locations but may be ordered online at *http://www.usps.com/shop.*

* * * * *

200 Commercial Letters and Cards

201 Physical Standards

* * * * *

2.0 Physical Standards for Nonmachinable Letters

* * * * *

[Revise the title and text of 2.5 as follows:]

2.5 Express Mail, Priority Mail, and Critical Mail Letters

Mailers are encouraged, but not required, to design and produce Express Mail and Priority Mail letter-size pieces as machinable letters. Critical Mail letter-size pieces (see 223) that do not meet machinable letter standards in 1.0 and 3.0 are not eligible for Critical Mail letter prices, but are eligible for Priority Mail Commercial Plus Flat Rate Envelope prices.

* * * * *

202 Elements on the Face of a Mailpiece

* * * * *

3.0 Placement and Content of Mail Markings

* * * * *

[Revise the title and introductory text of 3.3 as follows: Federal Register]

3.3 Express Mail, Priority Mail, and Critical Mail Markings

Express Mail pieces must be marked "Express Mail," by using a mailing label according to 215.2.1. Priority Mail pieces must have the basic price marking of "Priority Mail" printed in a prominent location on the address side; see more options in 102.3.1. Critical Mail letters (see 223) have the marking "Critical Mail" preprinted on the USPS-produced packaging. Critical Mail letters with permit imprint postage must have "Critical Mail" as the class of mail in the indicia (under 604.5.) when a class of mail is printed. In addition, except for pieces paid using an Express Mail Corporate Account, permit imprint, Express Mail and Priority Mail pieces claiming commercial base or

commercial plus prices also must bear the appropriate commercial price marking, printed on the piece or produced as part of the meter imprint or PC Postage indicia. Place the commercial price marking directly above, directly below, or to the left of the postage. Markings are as follows:
* * *

* * * * *

210 Express Mail

213 Prices and Eligibility

1.0 Prices and Fees

* * * * *

1.4 Commercial Plus Prices

[Revise the title and introductory text of 1.4.1 as follows:]

1.4.1 Eligibility

Commercial plus pricing is available to customers whose cumulative account volume exceeds 5,000 pieces in the previous four quarters or who have a customer commitment agreement with USPS (*see* 1.4.2) and who are:

* * * * *

[Revise 1.4.1 by adding new item "d" as follows:]

d. Customers using USPS-approved IBI postage meters that print the IBI with the appropriate price marking (see 202.3.3) and who electronically transmit transactional data daily to USPS for all mailpieces and mail categories and use an approved Express Mail shipping label.

1.4.2 New Express Mail Customers

[Revise the last sentence of 1.4.2 as follows:]

* * * Shippers must contact their account manager or the manager, Shipping Support, Shipping Services (*see* 608.8.0 for address) for additional information.

[Revise the title and first sentence of 1.5 as follows:]

1.5 Flat Rate Envelopes

Material mailed in USPS-provided Express Mail Flat Rate Envelopes is charged a flat price, regardless of the actual weight (up to 70 pounds) of the piece or its domestic destination. * * *

* * * * *

[Add new 1.9 as follows:]

1.9 Determining Single-Piece Weight

When determining single-piece weight, express all weights in decimal pounds rounded off to two decimal places (except mailers using eVS). When using a manifest mailing system, the manifest weight field must be properly completed by adhering to the rules relative to the specific manifest.

* * * * *

3.0 Basic Standards for Express Mail

* * * * *

3.2 Matter Closed Against Postal Inspection

[Revise the first two sentences of 3.2 as follows:]

Matter closed against postal inspection includes First-Class Mail, Critical Mail, Priority Mail, and Express Mail. The USPS may open mail other than First-Class Mail, Critical Mail, Priority Mail or Express Mail to determine whether the proper price is paid. * * *

* * * * *

214 Postage Payment and Documentation

1.0 Basic Standards for Postage Payment Options

1.2 Commercial Plus Pricing

[Revise 1.2 as follows:]

Commercial plus Express Mail postage may be paid with:

a. An Express Mail Corporate Account (*see* 2.0), including federal agency accounts.

b. USPS-approved PC Postage products by registered end-users in conjunction with a qualifying shipping label managed by the PC Postage system used.

c. Permit imprint through the Electronic Verification System (eVS) under 705.2.9.

d. USPS-approved IBI postage meters that print the IBI with the appropriate price marking (*see* 402.2.1) and transactional data is electronically transmitted daily to USPS for all mailpieces and mail categories with an approved Express Mail shipping label.

* * * * *

220 Priority Mail

223 Prices and Eligibility

1.0 Prices and Fees

* * * * *

1.3 Commercial Plus Prices

1.3.1 Basic Eligibility

[Revise introductory paragraph of 1.3.1 as follows:]

For prices, *see* Notice 123—Price List. Commercial plus prices are available to Priority Mail customers who qualify for commercial base prices and whose cumulative account volume exceeds 5,000 letter-size and flat-size pieces or 75,000 total pieces (*see* 423) in the previous calendar year (except Priority Mail Open and Distribute) or who have a customer commitment agreement with USPS, and are:

* * * * *

[Add new item 1.3.1e as follows:]

e. Customers using USPS-approved IBI postage meters that print the IBI with the appropriate price marking for commercial price items (202.3.3) and electronically transmit transactional data daily to USPS for all mailpieces and mail categories.

* * * * *

[Renumber current 1.4 through 1.7 as 1.5 through 1.8 and add new 1.4 as follows:]

1.4 Critical Mail Prices

1.4.1 Basic Eligibility

Critical Mail letter-size pieces are charged a flat rate regardless of domestic destination or weight for barcoded, automation-compatible letters up to 3 ounces. Critical Mail letter-size pieces that exceed 3 ounces in weight, exceed ¼ inch thickness, or are not barcoded according to 3.2.1, will be charged the Priority Mail Commercial Plus Flat Rate Envelope price (volume thresholds apply). Critical Mail letter prices are commercial plus prices available to Critical Mail customers whose Priority Mail and Critical Mail volume exceeds 5,000 letter-size and flat-size pieces (including Flat Rate Envelopes, but not the Padded Flat Rate Envelope), in the previous calendar year or who have a customer commitment agreement (*see* 1.3.4) with USPS, and that are:

a. Registered end-users of USPS-approved PC Postage products when using a qualifying shipping label managed by the PC Postage system used.

b. Permit imprint customers.

1.4.2 New Critical Mail Customers

The following requirements must be met for new Critical Mail customers:

a. All customers using Critical Mail service must have a customer commitment agreement with USPS. Customers must contact their account manager or the Manager, Shipping Support, Shipping Services (*see* 608.8.0 for address) for agreement requirements.

b. USPS-produced Critical Mail letter-size envelopes must be used and mailpieces must be authorized by the Manager, Integrated Business Solutions, Shipping Services (*see* 608.8.1 for address). Prior to the first mailing of Critical Mail items, the mailer must provide 10 preproduction mailpiece samples to the Manager, Integrated Business Solutions or designee for review and approval. Sample pieces must be packaged in USPS-produced Critical Mail letter-size envelopes;

mailpieces must include the full range of the proposed contents that will be shipped; and mailpieces must bear applicable labels and barcodes (*i.e.* Intelligent Mail barcodes and Delivery Confirmation labels or Signature Confirmation labels).

1.5 Flat Rate Envelopes—Basic Standards

* * * * *

1.5.2 Flat Rate Envelopes—Price and Eligibility

[Revise newly numbered 1.5.2 as follows:]

All USPS-produced Priority Mail envelopes smaller than the EP14F envelope (9.5 inches by 12.5 inches) are eligible for the Priority Mail Flat Rate Envelope price whether or not they are marked "Flat Rate Envelope." Each type of USPS-produced Priority Mail Flat Rate Envelope is priced at a flat rate regardless of the actual weight (up to 70 pounds) of the mailpiece or domestic destination. *See* Notice 123—Price List for applicable prices.

[Renumber new 1.6 through 1.8 as new 1.7 through 1.9 and add new 1.6 Hold For Pickup as follows:]

1.6 Hold For Pickup

Under Hold For Pickup service, Priority Mail items are held at a designated Post Office location for pick up by a specified addressee or designee. Hold For Pickup service is not available for Critical Mail (*see* 508.7, *Hold For Pickup*).

* * * * *

1.8 Determining Single-Piece Weight

[Revise the last sentence of renumbered 1.8 and add a new last sentence as follows:]

* * * Express all single-piece weights in decimal pounds rounded off to two decimal places except mailers using eVS. Mailers using eVS may round off to four decimals, and eVS will automatically round to the appropriate decimal place. If a customer is using a manifest mailing system, the manifest weight field must be properly completed by adhering to the rules relative to the specific manifest.

* * * * *

3.0 Basic Standards for Priority Mail

3.1 Definition

Priority Mail is an expedited service and may contain any mailable matter weighing no more than 70 pounds. Lower weight limits apply to some commercial mail parcels under 423.1.0; Critical Mail letters and flats; APO/FPO mail subject to 703.2.0 and 703.4.0 and Department of State mail subject to 703.3.0.

[Renumber current 3.2 through 3.3 as new 3.3 through 3.4.]

[Add new 3.2 as follows:]

3.2 Additional Standards for Critical Mail Letters

3.2.1 Definition

Critical Mail, a category of Priority Mail, is available for barcoded, automation-compatible letters and barcoded, automation flats (*see* 323.1.4). With the exception of restricted mail as described in 601.8.0, any mailable matter may be mailed via Critical Mail. USPS-produced Critical Mail letter-size envelopes must be used for all Critical Mail letters. Letters may not exceed 3 ounces in weight or ¼ inch thickness. Critical Mail letters also must:

a. Bear an Intelligent Mail barcode with the correct routing code that represents the finest depth of sort achieved in the address matching process, and barcodes must be placed according to 202.5.0.

b. Bear a delivery address that includes the correct ZIP Code, ZIP+4 Code, or numeric equivalent to the delivery point barcode (DPBC) and that meets address quality standards in 233.5.5 and 708.3.0.

3.2.2 Extra Services With Critical Mail Letters

Insured Mail, Delivery Confirmation, and Signature Confirmation are available with Critical Mail pieces. Delivery Confirmation (electronic only) is optional and included at no extra charge for Critical Mail.

* * * * *

3.4 Matter Closed Against Postal Inspection

[Revise the first two sentences of renumbered 3.4 as follows:]

Matter closed against postal inspection includes First-Class Mail, Priority Mail (including Critical Mail), and Express Mail. The USPS may open mail other than First-Class Mail, Priority Mail (including Critical Mail) or Express Mail to determine whether the proper postage is paid. * * *

* * * * *

224 Postage Payment and Documentation

1.0 Basic Standards for Postage Payment

1.1 Postage Payment Options

* * * * *

1.1.2 Commercial Plus Pricing

Commercial plus Priority Mail may be paid with:

[Add new item d as follows:]

d. USPS-approved IBI postage meters that print the IBI with the appropriate price marking (*see* 202.3.3) and electronically transmit transactional data daily to USPS for all mailpieces and mail categories.

[Add new item 1.1.3 as follows:]

1.1.3 Critical Mail Pricing

Critical Mail pieces must bear an Intelligent Mail barcode and postage may be paid with:

a. USPS-approved PC Postage products when registered end-users apply a qualifying shipping label managed by the PC Postage system used.

b. Permit imprint.

* * * * *

225 Mail Preparation

1.0 General Information for Mail Preparation

1.1 Priority Mail and Critical Mail Packaging Provided by the USPS

[Revise text of 1.1 as follows:]

Priority Mail packaging provided by the USPS must be used only for Priority Mail. Regardless of how the packaging is reconfigured or how markings may be obliterated, any matter mailed in USPS-provided Priority Mail packaging is charged the appropriate Priority Mail price. Any matter mailed in USPS-produced Critical Mail letter packaging will be charged Critical Mail letter prices only if all applicable standards in 223 are met; otherwise such matter will be charged the Priority Mail Commercial Plus Flat Rate Envelope price.

* * * * *

[Revise the title and text of 2.0 as follows:]

2.0 Markings

The marking "Priority Mail" must be placed prominently on the address side of each piece of Priority Mail. USPS-produced Critical Mail letter envelopes bear the marking "Critical Mail" and must be used for Critical Mail letters. *See* 202.3.3.

* * * * *

[Add new 4.0 to read as follows:]

4.0 Additional Standards for Preparing Critical Mail Letters

4.1 Preparing Critical Mail Letters in Trays

When mailing 200 or more Critical Mail letters in one mailing, prepare the letters in USPS-provided letter trays with the letters "faced" (oriented with

all addresses in the same direction with the postage area in the upper right). Secure and strap letter trays using USPS-provided sleeves. Label trays under the applicable letter tray label standards in 235.4.0 and as follows:

a. Line 1: Use L201; for mail originating in ZIP Code areas in Column A, use "MXD" followed by city, state, and 3-digit ZIP Code prefix in Column C (use "MXD" instead of "OMX" in the destination line and ignore Column B).

b. Line 2: "CRITICAL MAIL LTRS WKG."

c. Line 3: Office of mailing or mailer information.

4.2 Postage for Critical Mail and Priority Mail

When a manifest mailing system is used, Critical Mail and Priority Mail may be entered on the same postage statement, but mailpieces must be presented separately and may not be combined or commingled in the same container.

226 Enter and Deposit

1.0 Deposit

1.1 General

[Revise the text of 1.1 as follows:]

Mailpieces bearing postage evidencing indicia must be deposited in a collection box (except for mailings of 200 or more Critical Mail letters) or at a postal facility within the ZIP Code shown in the indicia, except as permitted under 2.0 or 604.4.5.3. Permit imprint mail must be presented at a Post Office or USPS acceptance site under 604.5.0 or 705.

* * * * *

2.0 Pickup on Demand Service

[Revise the text of 2.0 as follows:]

Pickup on Demand service (see 507.6.0) is available from designated Post Offices for Priority Mail and Critical Mail letters.

* * * * *

300 Commercial Flats

301 Physical Standards

* * * * *

2.0 Physical Standards for Nonautomation Flats

* * * * *

[Revise title and text of 2.6 as follows:]

2.6 Express Mail, Priority Mail, and Critical Mail Flats

Mailers are encouraged, but not required to design and produce Express Mail and Priority Mail flat-size pieces under the general standards in 1.0 and the automation standards in 3.0. Critical Mail flat-size pieces (*see* 323) that do not meet the standards for flats in 301.1.0 and 301.3.0 are not eligible for Critical Mail flats prices, but are eligible for Priority Mail Commercial Plus Flat Rate Envelope prices (volume thresholds apply).

* * * * *

302 Elements on the Face of a Mailpiece

* * * * *

3.0 Placement and Content of Mail Markings

[Revise the title and text of 3.1 as follows:]

3.1 Express Mail, Priority Mail, and Critical Mail Markings

Express Mail pieces must be marked "Express Mail," by using a mailing label according to 315.2.1. Priority Mail pieces must have the basic price marking of "Priority Mail" printed prominently on the address side; see more options in 102.3.1. Critical Mail flats (*see* 323) have the marking "Critical Mail" preprinted on the USPS-produced packaging. Critical Mail flats with permit imprint postage must have "Critical Mail" in the indicia when a class of mail is printed. In addition, except for pieces paid using an Express Mail Corporate Account or permit imprint, Express Mail and Priority Mail pieces claiming the commercial base or commercial plus price must bear the appropriate commercial price marking, printed on the piece or produced as part of the meter imprint or PC Postage indicia. Place the commercial price marking directly above, directly below, or to the left of the postage. Markings are as follows: * * *

* * * * *

310 Express Mail

313 Prices and Eligibility

1.0 Prices and Fees

* * * * *

1.4 Commercial Plus Prices

[Revise the title and introductory text of 1.4.1 as follows:]

1.4.1 Eligibility

Commercial plus prices are available for customers whose cumulative account volume exceeds 5,000 pieces in the previous four quarters or who have a customer commitment agreement with USPS (*see* 1.4.2) and who are:

* * * * *

[Revise 1.4.1 by adding new item "d" as follows:]

d. Customers using USPS-approved IBI postage meters that print the IBI with the appropriate price marking (*see* 302.3.1) and who electronically transmit transactional data daily to USPS for all mailpieces and mail categories and use an approved Express Mail shipping label.

1.4.2 New Express Mail Customers

[Revise the last sentence of 1.4.2 as follows:]

* * * Shippers must contact their account manager or the manager, Shipping Support, Shipping Services (*see* 608.8.0 for address) for additional information.

[Revise the title and first sentence of the paragraph of 1.5 to make plural as follows:]

1.5 Flat Rate Envelopes

Material mailed in USPS-provided Express Mail Flat Rate Envelopes are charged a flat price, regardless of the actual weight (up to 70 pounds) of the piece or its domestic destination. * * *

* * * * *

[Add new 1.9 as follows:]

1.9 Determining Single-Piece Weight

When determining single-piece weight, express all weights in decimal pounds rounded off to two decimal places (except mailers using eVS). When using a manifest mailing system, the manifest weight field must be properly completed by adhering to the rules relative to the specific manifest.

* * * * *

3.0 Basic Standards for Express Mail

* * * * *

3.2 Matter Closed Against Postal Inspection

[Revise the first two sentences of 3.2 as follows:]

Matter closed against postal inspection includes First-Class Mail, Priority Mail (including Critical Mail), and Express Mail. The USPS may open mail other than First-Class Mail, Priority Mail (including Critical Mail), or Express Mail to determine whether the proper price is paid. * * *

* * * * *

314 Postage Payment and Documentation

1.0 Basic Standards for Postage Payment Options

1.1 Commercial Base Pricing

Commercial base Express Mail postage may be paid with:

[Revise 1.1 by deleting item "c" in its entirety and reallocating items as "d" thru "f" as new c through e.]

* * * * *

[Revised reallocated item d as follows:]

d. USPS-approved IBI postage meters that print the IBI with the appropriate price marking (*see* 302.3.1) and transactional data is electronically transmitted to USPS with an approved Express Mail shipping label.

1.2 Commercial Plus Pricing

[Revise 1.2 as follows:]

Commercial plus Express Mail postage may be paid with:

a. An Express Mail Corporate Account (*see* 2.0), including federal agency accounts.

b. USPS-approved PC Postage products by registered end-users in conjunction with a qualifying shipping label managed by the PC Postage system used.

c. Permit imprint through the Electronic Verification System (eVS) under 705.2.9.

d. USPS-approved IBI postage meters that print the IBI with the appropriate price marking (*see* 402.2.1) and transactional data is electronically transmitted daily to USPS for all mailpieces and mail categories with an approved Express Mail shipping label.

* * * * *

320 Priority Mail

323 Prices and Eligibility

1.0 Prices and Fees

* * * * *

1.3 Commercial Plus Prices

1.3.1 Basic Eligibility

[Revise text of 1.3.1 as follows:]

For prices, *see* Notice 123—Price List. Commercial plus prices are available to Priority Mail customers who qualify for commercial base prices and whose cumulative account volume exceeds 5,000 letter-size and flat-size pieces or 75,000 total pieces (*see* 423) in the previous calendar year (except Priority Mail Open and Distribute) or who have a customer commitment agreement with USPS, and are:

* * * * *

[Add new item 1.3.1e as follows:]

e. Customers using USPS-approved IBI postage meters that print the IBI with the appropriate price marking for commercial price items (*see* 302.3.1) and electronically transmit transactional data daily to USPS for all mailpieces and mail categories.

* * * * *

[Renumber current 1.4 through 1.7 as 1.5 through 1.8 and add new 1.4 as follows:]

1.4 Critical Mail Prices

1.4.1 Basic Eligibility

Critical Mail flat-size pieces are charged a flat rate regardless of domestic destination or weight for barcoded, automation flats up to 13 ounces. Critical Mail flat-size pieces that exceed 13 ounces in weight or exceed ¾ inch thickness, or are not barcoded according to 3.2.1, will be charged the Priority Mail Commercial Plus Flat Rate Envelope price (volume thresholds apply). Critical Mail prices for flats are available to Critical Mail customers whose Priority Mail and Critical Mail volume exceeds 5,000 letter-size and flat-size pieces (including Flat Rate Envelopes, but not the Padded Flat Rate Envelope), in the previous calendar year or who have a customer commitment agreement (*see* 1.4.2) with USPS, and that are:

a. Registered end-users of USPS-approved PC Postage products when using a qualifying shipping label managed by the PC Postage system used.

b. Permit imprint customers.

1.4.2 New Critical Mail Customers

The following requirements must be met for new Critical Mail customers:

a. All customers using Critical Mail service must have a customer commitment agreement with USPS. Customers must contact their account manager or the Manager, Shipping Support, Shipping Services (*see* 608.8.0 for address) for agreement requirements.

b. USPS-produced Critical Mail flat-size envelopes must be used and mailpieces must be authorized by the Manager, Integrated Business Solutions, Shipping Services (*see* 608.8.1 for address). Prior to the first mailing of Critical Mail items, the mailer must provide 10 preproduction mailpiece samples to the Manager, Integrated Business Solutions or designee for review and approval. Sample pieces must be packaged in USPS-produced Critical Mail flat-size envelopes; mailpieces must include the full range of the proposed contents that will be shipped; and mailpieces must bear applicable labels and barcodes (*i.e.* Intelligent Mail barcodes and Delivery Confirmation labels or Signature Confirmation labels).

* * * * *

[Renumber new 1.6 through 1.8 as new 1.7 through 1.9 and add new 1.6 Hold For Pickup as follows:]

1.6 Hold For Pickup

Under Hold For Pickup service, Priority Mail items are held at a designated Post Office location for pick up by a specified addressee or designee. Hold For Pickup service is not available for Critical Mail (*see* 508.7, *Hold For Pickup*).

* * * * *

1.8 Determining Single-Piece Weight

[Revise the last sentence of renumbered 1.8 and add a new last sentence as follows:]

* * * Express all single-piece weights in decimal pounds rounded off to two decimal places except mailers using eVS. Mailers using eVS may round off to four decimals, and eVS will automatically round to the appropriate decimal place. If a customer is using a manifest mailing system, the manifest weight field must be properly completed by adhering to the rules relative to the specific manifest.

* * * * *

3.0 Basic Standards for Priority Mail

3.1 Definition

[Add new second sentence to item 3.1 as follows:]

* * * Lower weight limits apply to some commercial parcels under 423.1.0; Critical Mail letters and flats under 223.1.4 and 323.1.4; APO/FPO mail subject to 703.2.0 and 703.4.0 and Department of State mail subject to 703.3.0.

[Renumber current 3.2 through 3.3 as new 3.3 through 3.4.]

[Add new 3.2 as follows:]

3.2 Additional Standards for Critical Mail Flats

3.2.1 Definition

Critical Mail, a category of Priority Mail, is available for barcoded, automation-compatible letters (*see* 223.1.3) and barcoded, automation flats. With the exception of restricted mail as described in 601.8.0, any mailable matter may be mailed via Critical Mail. USPS-produced Critical Mail flat-size envelopes must be used for all Critical Mail flats. Flats may not exceed 13 ounces in weight or ¾ inch thickness. Critical Mail flats also must:

c. Bear an Intelligent Mail barcode with the correct routing code that represents the finest depth of sort achieved in the address matching process, and barcodes must be placed according to 302.4.0.

d. Bear a delivery address that includes the correct ZIP Code, ZIP+4 Code, or numeric equivalent to the delivery point barcode (DPBC) and that meets address quality standards in 333.5.5 and 708.3.0.

3.2.2 Extra Services With Critical Mail Flats

Insured Mail, Delivery Confirmation, and Signature Confirmation are available with Critical Mail pieces. Delivery Confirmation (electronic only) is optional and included at no extra charge for Critical Mail.

* * * * *

3.4 Matter Closed Against Postal Inspection

[Revise the first two sentences of renumbered 3.4 as follows:]

Matter closed against postal inspection includes First-Class Mail, Priority Mail (including Critical Mail), and Express Mail. The USPS may open mail other than First-Class Mail, Priority Mail (including Critical Mail) or Express Mail to determine whether the proper postage is paid. * * *

* * * * *

324 Postage Payment and Documentation

1.0 Basic Standards for Postage Payment

1.1 Postage Payment Options

* * * * *

1.1.2 Commercial Plus Pricing

Commercial plus Priority Mail postage may be paid with:

[Add new item 1.1.2d as follows:]

d. USPS-approved IBI postage meters that print the IBI with the appropriate price marking (*see* 302.3.1) and electronically transmit transactional data daily to USPS for all mailpieces and mail categories.

[Add new 1.1.3 as follows:]

1.1.3 Critical Mail Pricing

Critical Mail pieces must bear an Intelligent Mail barcode and postage may be paid with:

a. USPS-approved PC-Postage products when registered end-users use a qualifying shipping label.

b. Permit imprint.

* * * * *

325 Mail Preparation

1.0 General Information for Mail Preparation

1.1 Priority Mail Packaging Provided by the USPS

[Add new last sentence to item 1.1 as follows:]

* * * Any matter mailed in USPS-produced Critical Mail flat-size packaging will be charged Critical Mail flats prices only if all applicable standards in 323 are met; otherwise such matter will be charged the Priority Mail Commercial Plus Flat Rate Envelope price.

1.2 Required Use of Return Address

[Revise text of 1.2 as follows:]

The sender's domestic return address must appear legibly on Priority Mail and Critical Mail pieces.

[Revise title and text of 2.0 as follows:]

2.0 Markings

The marking "Priority Mail" must be placed prominently on the address side of each piece of Priority Mail. USPS-produced Critical Mail envelopes for flats bear the marking "Critical Mail" and must be used for Critical Mail flats. *See* 302.3.1.

* * * * *

[Add new 4.0 to read as follows:]

4.0 Additional Standards for Preparing Critical Mail Flats

4.1 Preparing Critical Mail Flats in Trays

When mailing 200 or more Critical Mail flats in one mailing, prepare Critical Mail flats in USPS-provided flats trays with green lids, place the mail with addresses facing upward in the same direction. Place pieces in trays to maintain their orientation. The weight of a tray and its contents must not exceed 70 pounds. Cover each tray with the green side of the lid facing up and secure the lid with two straps placed tightly around the width of the tray. Label trays under the applicable flat tray label standards in 335.4.0 and as follows:

a. Line 1: Use L201; for mail originating in ZIP Code areas in Column A, use "MXD" followed by city, state, and 3-digit ZIP Code prefix in Column C (use "MXD" instead of "OMX" in the destination line and ignore Column B).

b. Line 2: "CRITICAL MAIL FLTS WKG."

c. Line 3: Office of mailing or mailer information.

4.2 Postage for Critical Mail and Priority Mail

When a manifest mailing system is used, Critical Mail and Priority Mail may be entered on the same postage statement, but mailpieces must be presented separately and may not be combined or commingled in the same container.

* * * * *

326 Enter and Deposit

1.0 Deposit

1.1 General

[Revise the text of 1.1 as follows:]

Mailpieces bearing postage evidencing indicia must be deposited in a collection box (except for mailings of 200 or more Critical Mail flats) or at a postal facility within the ZIP Code shown in the indicia, except as permitted under 2.0 or 604.4.5.3. Permit imprint mail must be presented at a Post Office or USPS acceptance site under 604.5.0, or 705.

* * * * *

2.0 Pickup on Demand Service

[Revise the text of 2.0 as follows:]

Pickup on Demand service (*see* 507.6.0) is available from designated Post Office locations for Priority Mail and Critical Mail flats.

* * * * *

400 Commercial Parcels

* * * * *

402 Elements on the Face of a Mailpiece

* * * * *

2.0 Placement and Content of Markings

[Revise the title and introductory text of 2.1 as follows:]

2.1 Express Mail and Priority Mail Markings

Except for pieces paid using an Express Mail Corporate Account, Merchandise Return Service, or permit imprint, Express Mail and Priority Mail pieces claiming the commercial base or commercial plus price must bear the appropriate commercial price marking, printed on the piece or produced as part of the meter imprint or PC Postage indicia. Place the marking directly above, directly below, or to the left of the postage. Express Mail pieces must be marked "Express Mail," by using a mailing label according to 415.2.1. Priority Mail pieces must bear the marking of "Priority Mail" prominently on the address side of each piece of Priority Mail. *See* 102.3.0 for more marking options. Markings are as follows:

* * * * *

2.2 Priority Mail Commercial Plus Cubic Markings—PC Postage Indicia

[Revise the first sentence of 2.2 to read as follows:]

Priority Mail pieces claiming the commercial plus cubic price must be marked "Priority Mail" and bear the applicable marking that reflects the respective price tier printed on the piece or produced as part of the meter imprint or PC Postage indicia. * * *

2.3 Priority Mail Commercial Plus Cubic Markings—Permit Imprint

[Revise 2.3 as follows:]

Priority Mail permit imprint pieces claiming the commercial plus cubic price must be marked "Priority Mail" and bear the applicable marking, printed on the piece or produced as part of the permit imprint indicia. * * *

* * * * *

410 Express Mail

413 Prices and Eligibility

1.0 Prices and Fees

1.1 Prices Charged Per Piece

[Revise the first sentence of 1.1 as follows:]

Except for Flat Rate Envelopes, Express Mail postage is charged for each addressed piece according to its weight and zone. * * *

1.2 Price Application

[Revise the first and second to last sentence of 1.2 to make envelope plural as follows:]

Except under 1.5, Flat Rate Envelopes, * * * Except for Express Mail Flat Rate Envelopes, Express Mail prices are based on weight and zone. * * *

[Revise the introductory paragraph of item 1.3 as follows:]

1.3 Commercial Base Prices

For Express Mail commercial base prices, *see* Notice 123—Price List. These prices apply to:

* * * * *

[Revise 1.3 by deleting item "d" in its entirety and reallocate items "e" and "f" as new items d and e.]

[Revise reallocated item d as follows:]

d. Customers using USPS-approved IBI postage meters that print the IBI with the appropriate price marking (*see* 402.2.1) and who electronically transmit transactional data to USPS and use an approved Express Mail shipping label.

1.4 Commercial Plus Prices

* * * * *

[Revise the title and introductory text of 1.4.1 as follows:]

1.4.1 Eligibility

Commercial plus pricing is available to customers whose cumulative account volume exceeds 5,000 pieces in the previous four quarters or who have a customer commitment agreement with USPS (*see* 1.4.2) and who are:

* * * * *

[Revise 1.4.1 by adding new item "d" as follows:]

d. Customers using USPS-approved IBI postage meters that print the IBI with the appropriate price marking (*see* 402.2.1) and who electronically transmit transactional data daily to USPS for all mailpieces and mail categories and use an approved Express Mail shipping label.

1.4.2 New Express Mail Customers

[Revise the last sentence of 1.4.2 as follows:]

* * * Shippers must contact their account manager or the manager, Shipping Support, Shipping Services (*see* 608.8.0 for address) for additional information.

[Revise title of 1.5 to make envelope plural and revise the paragraph as follows:]

1.5 Flat Rate Envelopes

There are two types of USPS-produced Express Mail Flat Rate Envelopes: A regular-size envelope and a legal-size envelope. Material mailed in USPS-provided Express Mail Flat Rate Envelopes is charged a flat rate, regardless of the actual weight (up to 70 pounds) of the mailpiece or domestic destination. Only USPS-produced Flat Rate Envelopes are eligible for the Flat Rate Envelope price. Custom Designed items are not eligible for flat-rate pricing. When sealing a Flat Rate Envelope, the container flaps must be able to close within the normal folds. Tape may be applied to the flaps and seams to reinforce the container, provided the design of the container is not enlarged by opening the sides and the container is not reconstructed in any way. For prices, *see* Notice 123—*Price List.*

* * * * *

[Delete current item 1.9 in its entirety and add new 1.9 as follows:]

1.9 Determining Single-Piece Weight

When determining single-piece weight, express all weights in decimal pounds rounded off to two decimal places (except mailers using eVS). When using a manifest mailing system, the manifest weight field must be properly completed by adhering to the rules relative to the specific manifest.

* * * * *

3.0 Basic Standards for Express Mail

* * * * *

3.2 Matter Closed Against Postal Inspection

[Revise the first two sentences of 3.2 as follows:]

Matter closed against postal inspection includes First-Class Mail, Priority Mail, (including Critical Mail), and Express Mail. The USPS may open mail other than First-Class Mail, Priority Mail (including Critical Mail), or Express Mail to determine whether the proper price is paid. * * *

* * * * *

414 Postage Payment and Documentation

1.0 Basic Standards for Postage Payment Options

1.1 Commercial Base Pricing

Commercial base Express Mail postage may be paid with:

[Revise 1.1 by deleting item "c" in its entirety and reallocating items as "d" thru "f" as new c through e.]

* * * * *

[Revised reallocated item d as follows:]

d. USPS-approved IBI postage meters that print the IBI with the appropriate price marking (*see* 402.2.1) and transactional data is electronically transmitted to USPS with an approved Express Mail shipping label.

* * * * *

1.2 Commercial Plus Pricing

[Revise 1.2 as follows:]

Commercial plus Express Mail postage may be paid with:

a. An Express Mail Corporate Account (*see* 2.0), including federal agency accounts.

b. USPS-approved PC Postage products by registered end-users in conjunction with a qualifying shipping label managed by the PC Postage system used.

c. Permit imprint through the Electronic Verification System (eVS) under 705.2.9.

d. USPS-approved IBI postage meters that print the IBI with the appropriate price marking (*see* 402.2.1) and transactional data is electronically transmitted daily to USPS for all mailpieces and mail categories with an approved Express Mail shipping label.

* * * * *

420 Priority Mail

423 Prices and Eligibility

1.0 Prices and Fees

1.1 Price Application

[Revise the text of 1.1 as follows:]

The following price applications apply:

a. Priority Mail mailpieces are charged per pound; any fraction of a pound is rounded up to the next whole pound. For example, if a piece weighs 1.25 pounds, the weight (postage) increment is 2 pounds. *See* exceptions in 1.1c, 1.1d, and 1.1e.

b. Flat-rate prices are not based on weight and zone, but are charged a flat

rate regardless of actual weight (up to 70 pounds) of the mailpiece and domestic destination.

c. The minimum postage amount per addressed piece is the 1-pound price. Except for:

1. Items mailed in flat-rate packaging.

2. Items eligible for commercial plus cubic pricing.

3. Regional Rate Boxes.

4. Commercial plus items weighing up to ½-pound (charge the ½-pound price for commercial plus items up to ½-pound. Items over ½-pound are rounded up to the next whole pound).

d. Commercial plus cubic prices are not based on weight, but are charged per cubic measurement of the mailpiece and zone and any fraction of a measurement is rounded *down* to the nearest 0.25 inch. For example, if a dimension of a commercial plus cubic piece measures 12.375 inches, it is rounded down to 12.25 inches.

e. Regional Rate Box prices are not based on weight but are priced based on the particular USPS-produced Box A or Box B and the zone to which it is sent.

f. Priority Mail items mailed under a specific customer agreement are charged according to the individual agreement.

[Revise item 1.2 as follows:]

1.2 Commercial Base Prices

1.2.1 Commercial Base Price Eligibility

For prices, see Notice 123—Price List. The commercial base prices are available for:

a. Click-N-Ship customers.

b. Registered end-users of USPS-approved PC Postage products when using a qualifying shipping label managed by the PC Postage system used.

c. Customers using permit imprint.

d. Priority Mail Open and Distribute customers using permit imprint when a Service barcode containing a unique service type code 55 is on the address label under 705.16.5.7. Priority Mail Open and Distribute is not available for customers using Regional Rate Boxes.

e. Customers using USPS-approved IBI postage meters that print the IBI with the appropriate price marking (*see* 402.2.1) and electronically transmit transactional data to USPS.

f. Permit holders using Merchandise Return Service (MRS) for Priority Mail mailpieces when all MRS requirements are met (507.11.0).

1.2.2 Regional Rate Box Prices

Regional Rate Box prices are available to Priority Mail commercial base and commercial plus customers who use USPS-produced Priority Mail Regional Rate Boxes and meet the requirements in 1.2.1. Prices are based on USPS-produced Box A or Box B and zone. Regional Rate Boxes exceeding the maximum weight per Box A or Box B (identified below) will be assessed Priority Mail commercial base or commercial plus (volume thresholds apply) prices based on weight and zone. Regional Rate Box options are:

a. Box A: (Side loading or top loading box) has a maximum weight limit of 15 pounds.

b. Box B: (Side loading or top loading box) has a maximum weight limit of 20 pounds.

1.3 Commercial Plus Prices

[Revise title and text of 1.3.1 as follows:]

1.3.1 Commercial Plus Price Eligibility

For prices, see Notice 123—Price List. Commercial plus prices are available to Priority Mail customers who qualify for commercial base prices and whose cumulative account volume exceeds 75,000 total pieces or 5,000 letter-size and flat-size pieces in the previous calendar year (except Priority Mail Open and Distribute) or who have a customer commitment agreement with USPS, and are:

a. Registered end-users of USPS-approved PC Postage products.

b. Permit imprint customers.

c. Priority Mail Open and Distribute (PMOD) customers whose account volume exceeds 600 PMOD containers (*see* 705.16.5.1).

d. Permit holders using MRS for Priority Mail items.

e. Customers using USPS-approved IBI postage meters that print the IBI with the appropriate price marking (*see* 402.2.1) and electronically transmit transactional data daily to USPS for all mailpieces and mail categories.

* * * * *

1.4 Commercial Plus Cubic

[Revise title and text of 1.4.1 as follows:]

1.4.1 Commercial Plus Cubic Eligibility

Commercial plus cubic prices are available to Priority Mail customers whose account volumes exceed 250,000 pieces in the previous calendar year or who have a customer commitment agreement with USPS. Each mailpiece must measure .50 cubic foot or less, weigh 20 pounds or less, and the longest dimension may not exceed 18 inches. Cubic-priced mailpieces may not be rolls or tubes. The commercial plus cubic prices are available for:

a. Registered end-users of USPS-approved PC Postage products.

b. Permit imprint customers. Customers are required to use the Electronic Verification System (eVS) program or submit an electronic postage statement with a computerized manifest under 705.2.0. Mailings must contain at least 200 pieces or 50 pounds of mail. Mailpieces are not required to be identical in weight.

c. Permit holders using Merchandise Return Service for parcels returned at Priority Mail prices.

* * * * *

1.4.3 Determining Cubic Tier Measurements for Rectangular and Nonrectangular Parcels

Follow these steps to determine the cubic tier measurement for rectangular and nonrectangular parcels:

[Revise items 1.4.3a and b as follows:]

a. Measure the length, width, and height in inches. Round down (see 604.7.0) each measurement to the nearest ¼ inch. For example, 6⅛″ × 5⅞″ × 6⅜″ is rounded down to 6″ × 5¾″ × 6¼″.

b. Multiply the length by the width by the height and divide by 1728. For example: 6″ × 5¾″ × 6¼″ = 215.6 divided by 1728 = 0.125 (This piece exceeds 0.10—Tier 1 threshold). It is calculated at Tier 2–0.101 to 0.20.

* * * * *

1.7 Flat Rate Envelopes and Boxes

* * * * *

[Revise 1.7.1 as follows:]

1.7.1 Flat Rate Envelopes—Price and Eligibility

USPS-produced Priority Mail Flat Rate Envelopes are priced at a flat rate regardless of the actual weight (up to 70 pounds) of the mailpiece or domestic destination. *See* Notice 123—Price List for applicable prices.

* * * * *

[Renumber current items 1.9 and 1.10 as new 1.10 and 1.11 and add new 1.9 as follows:]

1.9 Hold For Pickup

Under Hold For Pickup service, Priority Mail items are held at a designated Post Office location for pick up by a specified addressee or designee (*see* 508.7, *Hold For Pickup).*

[Revise the last sentence of renumbered 1.10 as follows:]

1.10 Determining Single-Piece Weight

* * * Express all single-piece weights in decimal pounds rounded off to two decimal places except mailers using eVS. Mailers using eVS may round off to four decimals, and eVS will automatically round to the appropriate decimal place. If a customer is using a manifest mailing system, the manifest weight field must be properly

completed by adhering to the rules relative to the specific manifest.

* * * * *

3.0 Basic Standards for Priority Mail

3.1 Definition

[Revise the last sentence of 3.1 by adding Regional Rate Boxes as follows:]

* * * Lower weight limits apply to commercial plus cubic (*see* 1.4); Regional Rate Boxes (*see* 1.2.2); Critical Mail (*see* 223 and 323); APO/FPO mail subject to 703.2.0 and 703.4.0; and Department of State mail subject to 703.3.0.

* * * * *

3.3 Matter Closed Against Postal Inspection

[Revise the first two sentences of 3.3 as follows:]

Matter closed against postal inspection includes First-Class Mail, Priority Mail (including Critical Mail), and Express Mail. USPS may open mail other than First-Class Mail, Priority Mail (including Critical Mail), or Express Mail to determine whether the proper postage is paid. * * *

424 Postage Payment and Documentation

1.0 Basic Standards for Postage Payment

1.1 Postage Payment Options

[Revise the title and introductory paragraph of 1.1.1 as follows:]

1.1.1 Commercial Base and Regional Rate Box Pricing

Priority Mail commercial base and Regional Rate Box postage may be paid with:

* * * * *

[Delete current items 1.1.1c and d in their entirety. Add new item c, and redesignate current items e and f as new d and e, as follows:]

* * * * *

c. Permit imprint.

[Revise redesignated 1.1.1d as follows:]

d. USPS-approved IBI postage meters that print the IBI with the appropriate price marking (*see* 402.2.1) and electronically transmit transactional data to USPS.

* * * * *

1.1.2 Commercial Plus Pricing

Priority Mail commercial plus postage may be paid with:

* * * * *

[Delete current items 1.1.2b and c in their entirety and replace with new items b through d as follows:]

b. Permit imprint.

c. Merchandise Return Service (MRS) when pieces are returned at Priority Mail prices and all MRS requirements are met (507.11.0).

d. USPS-approved IBI postage meters that print the IBI with the appropriate price marking (*see* 402.2.1) and electronically transmit transactional data daily to USPS for all mailpieces and mail categories.

1.1.3 Commercial Plus Cubic Pricing

Commercial plus cubic prices may be paid with:

* * * * *

[Revise 1.1.3 by adding new item "c" as follows:]

c. MRS when pieces are returned at Priority Mail prices and all MRS requirements are met (507.11.0).

* * * * *

425 Mail Preparation

* * * * *

3.0 Preparation

3.2 Preparing a Permit Imprint Mailing

[Revise 3.2 as follows:]

To use a permit imprint, the pieces must be of identical weight and, unless all the pieces are in a weight category for which the price does not vary by zone, the pieces must be separated by zone when presented to the Post Office.

* * * * *

426 Enter and Deposit

1.0 Time and Location of Deposit

[Revise text of 1.0 as follows:]

Mailpieces bearing postage evidencing indicia must be deposited in a collection box or at a postal facility within the ZIP Code shown in the indicia, except as permitted under 2.0 or 604.4.5.3. Permit imprint mail must be presented at a Post Office or USPS acceptance site under 604.5.0, or 705.

* * * * *

430 First-Class Mail

433 Prices and Eligibility

* * * * *

3.0 Basic Standards for First-Class Mail Parcels

3.2 Defining Characteristics

* * * * *

[Add new item 3.2.6 as follows:]

3.2.6 Hold For Pickup

Under Hold For Pickup service, only First-Class Mail parcels are held at a designated Post Office location for pick up by a specified addressee or designee (*see* 508.7).

* * * * *

450 Parcel Select

453 Prices and Eligibility

1.0 Prices and Fees

* * * * *

1.4 Computing Postage

1.4.1 Determining Single-Piece Weight

[Revise the last sentence of 1.4.1 as follows:]

* * * Except for mailers using eVS, when determining single-piece weight for Parcel Select mailpieces, express all weights in decimal pounds rounded off to two decimal places. Mailers using eVS may round off to four decimals, and eVS will automatically round to the appropriate decimal place. If a customer is using a manifest mailing system, the manifest weight field must be properly completed by adhering to the rules relative to the specific manifest.

* * * * *

3.0 Price Eligibility for Parcel Select

* * * * *

[Add new item 3.7 as follows:]

3.7 Hold For Pickup

Under Hold For Pickup service, only Parcel Select barcoded, nonpresorted parcels are held at a designated Post Office location for pick up by a specified addressee or designee (*see* 508.7).

* * * * *

455 Mail Preparation

* * * * *

4.0 Preparing Destination Entry Parcel Select

4.1 Preparing Destination Delivery Unit (DDU) Parcel Select

* * * * *

[Delete items of 4.1.4—Hold For Pickup Endorsement, Exhibit 4.1.4e, and Exhibit 4.1.4g in their entirety.]

* * * * *

500 Additional Mailing Services

503 Extra Services

* * * * *

2.0 Registered Mail

* * * * *

2.2 Basic Information About Registered Mail

* * * * *

2.2.2 Eligible Matter

[Revise the first sentence of 2.2.2 as follows:]

Only mailable matter prepaid with postage at the First-Class Mail or Priority Mail (excluding Critical Mail)

prices may be sent as Registered Mail. * * *

* * * * *

2.2.4 Ineligible Matter

Registration may not be obtained for mail that is handled as follows:

* * * * *

[Add new item 2.2.4g as follows:]

g. Critical Mail

* * * * *

3.0 Certified Mail

* * * * *

3.2 Basic Information

* * * * *

3.2.2 Eligible Matter

[Revise the text of 3.2.2 as follows:]

Only mailable matter prepaid with postage at First-Class Mail or Priority Mail (excluding Critical Mail) prices may be accepted as Certified Mail.

* * * * *

4.0 Insured Mail

* * * * *

4.2 Basic Information

* * * * *

4.2.2 Eligible Matter

The following types of mail may be insured:

[Revise item a as follows:]

a. First-Class Mail and Priority Mail (including Critical Mail), if it contains matter that is eligible to be mailed at Standard Mail or Package Services prices.

* * * * *

5.0 Certificate of Mailing

* * * * *

5.2 Basic Information

* * * * *

5.2.2 Eligible Matter—Single Piece

[Revise the text of 5.2.2 as follows:]

Form 3817 is used for a certificate of mailing for a First-Class Mail, Priority Mail (excluding Critical Mail) or Package Services single mailpiece. Facsimile forms also may be used.

* * * * *

5.2.4 Eligible Matter—Bulk Quantities

[Revise the first two sentences of 5.2.4 as follows:]

Form 3606 is used for a certificate of bulk mailing to specify the number of pieces mailed. This certificate is provided only for a mailing of identical pieces of First-Class Mail, Priority Mail (excluding Critical Mail), Standard Mail, and Package Services. * * *

* * * * *

6.0 Return Receipt

* * * * *

6.2 Basic Information

* * * * *

6.2.2 Eligible Matter

Return receipt service is available for:

* * * * *

[Revise item b as follows:]

b. First-Class Mail and Priority Mail (excluding Critical Mail) when purchased at the time of mailing with Certified Mail, COD, insured mail (for more than $200.00), or Registered Mail service.

* * * * *

7.0 Restricted Delivery

* * * * *

7.2 Basic Information

* * * * *

7.2.2 Eligible Matter

Restricted delivery service is available for:

[Revise item a as follows:]

a. First-Class Mail and Priority Mail (excluding Critical Mail) when purchased at the time of mailing with Certified Mail, COD, insured mail (for more than $200.00), or Registered Mail service.

* * * * *

8.0 Return Receipt for Merchandise

* * * * *

8.2 Basic Information

* * * * *

8.2.2 Eligible Matter

[Revise item 8.2.2 as follows:]

Return receipt for merchandise is available for merchandise sent as Priority Mail (excluding Critical Mail), Standard Mail machinable and irregular parcels, Package Services, and Parcel Select pieces.

* * * * *

9.0 Delivery Confirmation

* * * * *

9.2 Basic Information

* * * * *

9.2.2 Eligible Matter

[Revise the first sentence of the introductory text of 9.2.2 as follows:]

Delivery Confirmation is available for First-Class Mail parcels; all Priority Mail pieces (including Critical Mail); Standard Mail prepared as Not Flat-Machinable pieces or as machinable or irregular parcels (electronic option only); and Package Services or Parcel Select parcels under 401.1.0. * * *

* * * * *

10.0 Signature Confirmation

* * * * *

10.2 Basic Information

* * * * *

10.2.2 Eligible Matter

[Revise the first sentence of the introductory text of 10.2.2 as follows:]

Signature Confirmation is available for First-Class Mail parcels; all Priority Mail pieces (including Critical Mail); and Package Services or Parcel Select parcels under 401.1.0. * * *

* * * * *

11.0 Collect on Delivery (COD)

* * * * *

11.2 Basic Information

* * * * *

11.2.2 Eligible Matter

[Revise the introductory sentence of 11.2.2 as follows:]

COD service may be used for Express Mail, First-Class Mail, Priority Mail (excluding Critical Mail), and any Package Services or Parcel Select sub-category if:

* * * * *

12.0 Special Handling

* * * * *

12.2 Basic Information

* * * * *

12.2.2 Availability

[Revise the text of 12.2.2 as follows:]

Special handling service is available only for First-Class Mail, Priority Mail (excluding Critical Mail), Package Services, and Parcel Select pieces.

* * * * *

[Revise the title and text of 12.2.6 as follows:]

12.2.6 Parcel Select—Nonmachinable Parcels

The Parcel Select nonmachinable surcharge is not charged on parcels sent with special handling.

* * * * *

508 Recipient Services

1.0 Recipient Options

* * * * *

[Delete current 1.3, Parcel Select DDU Hold For Pickup Endorsement, in its

entirety, and renumber current 1.4 through 1.9 as new 1.3 through 1.8.]

* * * * *

4.0 Post Office Box Service

* * * * *

4.6 Fee Group Assignments

4.6.1 Regular Fee Groups

[Revise 4.6.1 as follows:]

For Post Office box fee groups, *see* Notice 123-*Price List.* Post Office boxes are assigned to fee groups based upon the classification of the Post Office location as competitive or market dominant. Local Post Offices can provide information about fees for a particular ZIP Code.

* * * * *

4.8 Keys and Locks

4.8.1 Key Deposit

[Revise the first two sentences of 4.8.1 as follows:]

Two Post Office box keys are initially issued to each new box customer. Except for PO Boxes classified as Group C1, which has no key deposit for the first two keys, box customers must pay a refundable key deposit on each of these keys. * * *

[Renumber current 7.0 through 9.0 as new 8.0 through 10.0, and add new 7.0 as follows:]

7.0 Hold For Pickup

7.1 Fees and Postage

7.1.1 Postage Payment Methods

Hold For Pickup service is available to mailers using the "Hold For Pickup" label when postage is paid by:

a. Click-N-Ship.

b. Registered end-users of USPS-approved PC Postage products.

c. Permit imprint.

d. USPS-approved Information-Based Indicia (IBI) postage meters.

7.1.2 Electronic Labels

When customers privately print an electronic "Hold For Pickup" label and exchange electronic files with USPS through an approved file transfer protocol (FTP), they qualify for the electronic Delivery Confirmation price (*see* Notice 123—*Price List*).

7.2 Basic Information

7.2.1 Description

Hold For Pickup service allows eligible mailpieces to be held at a designated Post Office location for pick up by a specified addressee or designee. When the mailer has provided contact information to the destination Post Office pickup location, the customer is notified by email that a package is available for pickup. This service provides the shipper with the date and time that the addressee took possession of the item. If the item has not been picked up within 5 days, the Post Office will make a second attempt to notify the addressee. The item will be returned to the sender if not picked up within 15 days.

7.2.2 Basic Eligibility

Hold For Pickup service is available with Express Mail under 113 and 413. Hold For Pickup service is also available with online and commercial mailings of Priority Mail (except Critical Mail), First-Class Mail parcels, and Parcel Select barcoded, nonpresorted parcels when:

a. Mailpieces bear the Hold For Pickup label.

b. Mailpieces bear an Intelligent Mail package barcode encoded with a correct ZIP+4 Code, matching the address and meeting the standards in 708.5.0.

c. At a minimum, one of the authorized extra services must be combined with Hold For Pickup service. If adding insurance for $200 or less, one of the other authorized extra services must be added, which provides required tracking for the service.

7.2.3 Additional Eligibility Standards

Parcels must meet these additional physical requirements:

a. The surface area of the address side of the parcel must be large enough to completely and legibly contain the delivery address, return address, postage, markings, endorsements, and extra service labels.

b. Except as provided in 7.2.3c, First-Class Mail parcels and Parcel Select barcoded, nonpresorted parcels must be greater than ¾ inch thick at the thickest point.

c. If the mailpiece is a First-Class Mail parcel or Parcel Select barcoded, nonpresorted parcel under 401.1.0 and no greater than ¾ inch thick, the contents must be prepared in a container that is constructed of strong, rigid fiberboard or similar material or in a container that becomes rigid after the contents are enclosed and the container is secured. The parcel must be able to maintain its shape, integrity, and rigidity throughout processing and handling without collapsing into a letter-size or flat-size piece.

7.2.4 Service Options

The Hold For Pickup service options are:

a. Retail option: Available at Post Office locations for Express Mail at the time of mailing (*see* 113.4.2.5 and 113.4.3.4).

b. Electronic option: For Express Mail commercial mailings, *see* 413.4.2.4 and 413.4.3.4. The electronic option is available for Priority Mail (excluding Critical Mail), First-Class Mail parcels, and Parcel Select barcoded, nonpresorted parcels. Mailers must establish an electronic link with USPS to exchange acceptance and delivery data. No mailing receipt is provided with this option. If the electronic option is requested for Hold For Pickup service for all of the pieces in the mailing and the mailing consists of pieces of identical weight, then postage may be paid by any method in 7.1.1, subject to the applicable standards. If the pieces are not of identical weight, then either the exact postage must be affixed to each piece or postage must be paid with permit imprint under a manifest mailing system using eVS (705.2.9).

7.2.5 Ineligible Matter

Hold For Pickup service is not available for the following:

a. First-Class Mail letter-size and flat-size pieces.

b. Critical Mail.

c. Periodicals.

d. Standard Mail.

e. Package Services.

f. Parcel Select destination entry, NDC Presort, and ONDC presort pieces.

g. Mailpieces with precanceled stamps.

h. Mail addressed to APO/FPO and DPO destinations.

7.2.6 Extra Services

Hold For Pickup service may be combined with:

a. Delivery Confirmation.

b. Insured mail.

c. Signature Confirmation.

7.3 Preparation Definitions and Instructions

Except for Express Mail Hold For Pickup presented at retail Post Office locations, mailers or their agents must prepare mailpieces bearing the "Hold For Pickup" label as follows:

a. Enter mailpieces at the Priority Mail, First-Class Mail parcel, or Parcel Select barcoded, nonpresorted price (*see* Notice 123—Price List).

b. Exchange electronic files with USPS through an approved file transfer protocol to notify the addressee when a parcel is available for pickup at the designated Post Office location and to notify the mailer or agent that items are available to be picked up as "return to sender."

c. Affix a properly formatted address label that has been approved by the

National Customer Support Center (NCSC) (*see* 608.8.1 for address).

d. In addition to the markings defined in 508.7, address labels on a Hold For Pickup mailpiece must contain the elements below.

1. The top portion of the address label must contain the service banner in the left corner and the postage indicia aligned in the right corner.

2. Centered on the line below the service banner and postage indicia, the words USPS and the applicable mail class must appear in at least 24-point type and in all capital letters. For example, "USPS PRIORITY MAIL."

3. Below the mail class marking, the word "From:" followed below by the return address of the mailer or agent must appear in at least 10-point type.

4. In the center of the label, the words "HOLD FOR PICKUP" must appear in reverse print (white print on a black background) in at least 24-point type and in all capital letters.

5. Below the words "HOLD FOR PICKUP," the following addressee information appears: "HOLD FOR: (Contact Required _ ID Purposes Only)." Immediately below, the name and address for the customer (the "addressee") must appear in at least 10-point type.

6. In the center of the label immediately above the Post Office location, the words "PICKUP LOCATION" must appear in reverse print in at least 12-point type and in all capital letters.

7. The lower half of the address label must contain an approved Intelligent Mail package barcode encoded with a correct ZIP+4 Code, matching the address and meeting the standards in 708.5.0 or an integrated barcode (which combines a confirmation service with an eligible combination) as defined in Publication 91, *Confirmation Services Technical Guide.*

* * * * *

600 Basic Standards for All Mailing Services

601 Mailability

* * * * *

6.0 Mailing Containers—Special Types of Envelopes and Packaging

* * * * *

[Renumber current 6.2 through 6.5 as new 6.3 through 6.6 and add new 6.2 as follows:]

6.2 Critical Mail Envelopes

Critical Mail letter-size and flat-size envelopes are provided by USPS and must be used only for Critical Mail. Use of these envelopes is restricted to eligible matter and postage payment methods (*see* 224.1.1 and 324.1.1). Matter mailed in USPS-produced Critical Mail envelopes that do not meet the criteria for Critical Mail are charged the appropriate Priority Mail Commercial Plus Flat Rate Envelope prices (volume thresholds apply).

* * * * *

602 Addressing

1.0 Elements of Addressing

* * * * *

1.5 Return Addresses

* * * * *

1.5.3 Required Use of Return Addresses

The sender's domestic return address must appear legibly on:

* * * * *

[Revise the text of 1.5.3e as follows:]

e. Priority Mail (including Critical Mail).

* * * * *

604 Postage Payment Methods

* * * * *

5.0 Permit Imprint (Indicia)

5.1 General Standards

5.1.1 Definition

[Revise the first and second sentence of 5.1.1 as follows:]

A mailer may be authorized to mail material without affixing postage when payment is made at the time of mailing from a permit imprint advance deposit account established with USPS for that purpose. This payment method may be used for postage and extra service fees for Express Mail (electronic verification system "eVS" only), Priority Mail (including Critical Mail), First-Class Mail, Standard Mail, Package Services, and Parcel Select. * * *

* * * * *

5.3 Indicia Design, Placement, and Content

* * * * *

5.3.5 Marking Expedited Handling on Standard Mail

[Revise the introductory paragraph of 5.3.5 by adding Critical Mail as follows:]

Except for postcard-size mail and permit imprint indicia placed on address labels, indicia on Standard Mail pieces bearing references to expedited handling or delivery (*e.g.,* "Critical Mail," "Priority," "Express," "Overnight") must:

* * * * *

[Revise the title and first three sentences of 5.3.6 as follows:]

5.3.6 Express Mail, Priority Mail, Critical Mail, and First-Class Mail Format

A permit imprint indicia on Express Mail, Priority Mail, Critical Mail, or First-Class Mail, must show "Express Mail," "Priority Mail" (or "Priority"), "Critical Mail," or "First-Class Mail" as applicable; "U.S. Postage Paid"; city and state; and permit number. If the Electronic Verification System (eVS) is used under 705.2.9, the marking "eVS" (or the alternative "e-VS" or "E–VS") must appear directly below the permit number. The "Express Mail," "Priority Mail" (or "Priority"), or "Critical Mail" marking may be omitted when using USPS-provided Express Mail, Priority Mail, and Critical Mail envelopes and containers. * * *

* * * * *

7.0 Computing Postage

7.1 General Standards

7.1.1 Determining Single-Piece Weight for Retail and Commercial Mail

[Revise the last sentence of 7.1.1 as follows:]

* * * Express all single-piece weights in decimal pounds rounded off to two decimal places.

* * * * *

7.1.3 Rounding Numerical Values

[Revise 7.1.3 by adding new item c as follows:]

For these standards:

* * * * *

c. *Round down* requires eliminating any digits to the right of the last number to be kept (*e.g.,* rounding down either 3.371 or 3.379 to two decimal places yields 3.37).

608 Postal Information and Resources

* * * * *

8.0 USPS Contact Information

8.1 Postal Service

* * * * *

[Revise the text of 8.1 by adding new department, Integrated Business Solutions, in alphabetical order as follows:]

Integrated Business Solutions, Shipping Services, US Postal Service, 475 L'Enfant Plz., SW., Rm 5149, Washington, DC 20260–5149.

* * * * *

[Replace Sales and Communication, Expedited Shipping as follows:]

Shipping Support, Shipping Services, US Postal Service, 475 L'Enfant Plz., SW., Rm 5437, Washington, DC 20260–0001.

* * * * *

We will publish an appropriate amendment to 39 CFR part 111 to reflect these changes.

Neva R. Watson,

Attorney, Legislative.

[FR Doc. 2010–28119 Filed 11–5–10; 8:45 am]

BILLING CODE 7710–12–P

ENVIRONMENTAL PROTECTION AGENCY

40 CFR Part 52

[EPA–R06–OAR–2007–1119; FRL–9221–4]

Approval and Promulgation of Implementation Plans; Albuquerque/Bernalillo County, NM; Interstate Transport of Pollution

AGENCY: Environmental Protection Agency (EPA).

ACTION: Final rule.

SUMMARY: The EPA is approving a revision to the Albuquerque/Bernalillo County, New Mexico State Implementation Plan (SIP) to address the "good neighbor" provisions of the Clean Air Act (CAA) section 110(a)(2)(D)(i), for the 1997 ozone and the 1997 fine particulate matter ($PM_{2.5}$) National Ambient Air Quality Standards (NAAQS) as it applies to Albuquerque/Bernalillo County. The revision addresses one element of CAA section 110(a)(2)(D)(i), which pertains to prohibiting air pollutant emissions from within a state to significantly contribute to nonattainment of the ozone and $PM_{2.5}$ NAAQS in any state. The Albuquerque/Bernalillo Air Quality Control Board (AQCB) is responsible for the portion of the New Mexico SIP that applies in Bernalillo County, which encompasses the City of Albuquerque. This rulemaking action is being taken under section 110 of the CAA.

DATES: This final rule will be effective December 8, 2010.

ADDRESSES: EPA has established a docket for this action under Docket Identification No. EPA–R06–OAR–2007–1119. All documents in the docket are listed at *http://www.regulations.gov.* Although listed in the index, some information is not publicly available, *e.g.,* Confidential Business Information or other information whose disclosure is restricted by statute. Certain other material, such as copyrighted material, is not placed on the Internet and will be publicly available only in hard copy form. Publicly available docket materials are available either electronically through *http://www.regulations.gov* or in hard copy at the Air Planning Section (6PD–L), Environmental Protection Agency, 1445 Ross Avenue, Suite 700, Dallas, Texas 75202–2733. The file will be made available by appointment for public inspection in the Region 6 Freedom of Information Act (FOIA) Review Room between the hours of 8:30 a.m. and 4:30 p.m. weekdays except for legal holidays. Contact the person listed in the **FOR FURTHER INFORMATION CONTACT** paragraph below or Mr. Bill Deese at 214–665–7253 to make an appointment. If possible, please make the appointment at least two working days in advance of your visit. There will be a 15 cent per page fee for making photocopies of documents. On the day of the visit, please check in at the EPA Region 6 reception area at 1445 Ross Avenue, Suite 700, Dallas, Texas.

FOR FURTHER INFORMATION CONTACT: Emad Shahin, Air Planning Section (6PD–L), Environmental Protection Agency, Region 6, 1445 Ross Avenue, Suite 700, Dallas, Texas 75202–2733, telephone (214) 665–6717; fax number (214) 665–7263; e-mail address *shahin.emad@epa.gov.*

SUPPLEMENTARY INFORMATION: Throughout this document wherever "we," "us," or "our" is used, we mean the EPA.

Outline:

I. What action Is EPA taking?
II. What is the background for this action?
III. Statutory and Executive Order Reviews

I. What action is EPA taking?

We are approving a revision to the New Mexico State Implementation Plan (SIP) to address the "good neighbor" provisions of the Clean Air Act (CAA) section 110(a)(2)(D)(i), for the 1997 ozone and the 1997 $PM_{2.5}$ standards for Albuquerque/Bernalillo County, demonstrating that one of the required elements of the CAA section 110(a)(2)(D)(i) has been met. The SIP revision demonstrates in part that air pollutant emissions from sources within Albuquerque/Bernalillo County do not significantly contribute to nonattainment of the relevant NAAQS in any other state. Therefore, we have determined that emissions from sources in Albuquerque/Bernalillo County do not significantly contribute to nonattainment of the 1997 ozone standards or of the 1997 $PM_{2.5}$ standards in any other state. In a separate action, EPA approved this revision for the remainder of the State of New Mexico (75 FR 33174, June 11, 2010).

At a later date we will act on addressing the remaining three elements of section 110(a)(2)(D)(i) which are: (1) Interference with the maintenance of the NAAQS in any other state; (2) interference with measures required to prevent significant deterioration of air quality in any other state; and (3) interference with measures required to protect visibility in any other state.

II. What is the background for this action?

On July 29, 2010, we published a proposal to approve the portion of a SIP revision adopted by AQCB that addressed one element of the CAA section 110(a)(2)(D)(i) (75 FR 44731). EPA's analyses for approving the SIP revision are described in detail in that proposal and in the supporting documentation available in the electronic docket for this action at *www.regulations.gov* (Docket Identification No. EPA–R06–OAR–2007–1119). The comment period on the proposal ended on August 30, 2010, and we did not receive any comments.

III. Statutory and Executive Order Reviews

Under the Clean Air Act, the Administrator is required to approve a SIP submission that complies with the provisions of the Act and applicable Federal regulations. 42 U.S.C. 7410(k); 40 CFR 52.02(a). Thus, in reviewing SIP submissions, EPA's role is to approve state choices, provided that they meet the criteria of the Clean Air Act. Accordingly, this action merely approves state law as meeting Federal requirements and does not impose additional requirements beyond those imposed by state law. For that reason, this action:

- Is not a "significant regulatory action" subject to review by the Office of Management and Budget under Executive Order 12866 (58 FR 51735, October 4, 1993);
- Does not impose an information collection burden under the provisions of the Paperwork Reduction Act (44 U.S.C. 3501 *et seq.*);
- Is certified as not having a significant economic impact on a substantial number of small entities under the Regulatory Flexibility Act (5 U.S.C. 601 *et seq.*);
- Does not contain any unfunded mandate or significantly or uniquely affect small governments, as described in the Unfunded Mandates Reform Act of 1995 (Pub. L. 104–4);
- Does not have Federalism implications as specified in Executive Order 13132 (64 FR 43255, August 10, 1999);
- Is not an economically significant regulatory action based on health or safety risks subject to Executive Order 13045 (62 FR 19885, April 23, 1997);

• Is not a significant regulatory action subject to Executive Order 13211 (66 FR 28355, May 22, 2001);

• Is not subject to requirements of Section 12(d) of the National Technology Transfer and Advancement Act of 1995 (15 U.S.C. 272 note) because application of those requirements would be inconsistent with the Clean Air Act; and

• Does not provide EPA with the discretionary authority to address, as appropriate, disproportionate human health or environmental effects, using practicable and legally permissible methods, under Executive Order 12898 (59 FR 7629, February 16, 1994).

In addition, this rule does not have tribal implications as specified by Executive Order 13175 (65 FR 67249, November 9, 2000), because the SIP is not approved to apply in Indian country located in the state, and EPA notes that it will not impose substantial direct costs on tribal governments or preempt tribal law.

The Congressional Review Act, 5 U.S.C. 801 *et seq.,* as added by the Small Business Regulatory Enforcement Fairness Act of 1996, generally provides that before a rule may take effect, the agency promulgating the rule must submit a rule report, which includes a copy of the rule, to each House of the Congress and to the Comptroller General of the United States. EPA will submit a report containing this action and other required information to the U.S. Senate, the U.S. House of Representatives, and the Comptroller General of the United States prior to publication of the rule in the **Federal Register**. A major rule cannot take effect until 60 days after it is published in the **Federal Register**. This action is not a "major rule" as defined by 5 U.S.C. 804(2).

Under section 307(b)(1) of the Clean Air Act, petitions for judicial review of this action must be filed in the United States Court of Appeals for the appropriate circuit by January 7, 2011. Filing a petition for reconsideration by the Administrator of this final rule does not affect the finality of this action for the purposes of judicial review nor does it extend the time within which a petition for judicial review may be filed, and shall not postpone the effectiveness of such rule or action. This action may not be challenged later in proceedings to enforce its requirements. (*See* section 307(b)(2).)

List of Subjects in 40 CFR Part 52

Environmental protection, Air pollution control, Incorporation by reference, Intergovernmental relations, Ozone, Particulate matter, Reporting and recordkeeping requirements, Volatile organic compounds.

Dated: October 27, 2010.

Al Armendariz,

Regional Administrator, Region 6.

■ 40 CFR part 52 is amended as follows:

PART 52—[AMENDED]

■ 1. The authority citation for part 52 continues to read as follows:

Authority: 42 U.S.C. 7401 *et seq.*

Subpart GG—New Mexico

■ 2. The second table in § 52.1620(e) entitled "EPA Approved Nonregulatory Provisions and Quasi-Regulatory Measures in the New Mexico SIP" is amended by adding an entry to the end to read as follows:

§ 52.1620 Identification of plan.

* * * * *

(e) * * *

EPA Approved Nonregulatory Provisions and Quasi-Regulatory Measures in the New Mexico SIP

Name of SIP provision	Applicable geographic or nonattainment area	State submittal/effective date	EPA approval date	Explanation
*	*	*	*	*
Interstate transport for the 1997 ozone and $PM_{2.5}$ NAAQS.	Bernalillo County	07/30/07	11/08/10 [*insert FR page number where the document begins*].	11/08/10 Approval for revisions to prohibit significant contribution to nonattainment in any other state.

[FR Doc. 2010–28003 Filed 11–5–10; 8:45 am]

BILLING CODE 6560–50–P

ENVIRONMENTAL PROTECTION AGENCY

40 CFR Parts 86, 1033, 1039, 1042, 1045, 1054, and 1065

[EPA–HQ–OAR–2010–0142; FRL–9220–6]

RIN 2060–AO69

Revisions to In-Use Testing for Heavy-Duty Diesel Engines and Vehicles; Emissions Measurement and Instrumentation; Not-to-Exceed Emission Standards; and Technical Amendments for Off-Highway Engines

AGENCY: Environmental Protection Agency (EPA).

ACTION: Direct final rule.

SUMMARY: EPA is taking direct final action on several revisions to EPA's mobile source emission programs standards and test procedures. EPA believes that each of these is minor and non-controversial in nature. Most of the changes arise from the results of the collaborative test program and related technical work we conducted for the highway heavy-duty diesel in-use testing program. Most noteworthy here is the adoption of a particulate matter measurement allowance for use with portable emission measurement systems. Related to this are two provisions to align the in-use program timing requirements with completion of the program as required in current regulations and the incorporation of revisions to a few technical requirements in the testing regulations based on information learned in this and one other test program. Finally, the DFR modifies a few transitional flexibilities for locomotive, recreational marine, and Tier 4 nonroad engines and incorporates a handful of minor corrections.

DATES: This is effective on January 7, 2011 without further notice, unless EPA receives adverse comment by December 8, 2010 *on any amendment, paragraph, or section of this rule.* If EPA receives adverse comment on this rule or any discrete amendment, paragraph, or section of this rule, we will publish a timely withdrawal of the Direct Final Rule, or the amendment, paragraph, or section of the direct final rule that received adverse comment, in the **Federal Register** informing the public that the rule, or that amendment, paragraph, or section of the rule, will not take effect.

ADDRESSES: Submit your comments, identified by Docket ID No. EPA–HQ–

OA–2010–0142, by one of the following methods:

- *http://www.regulations.gov:* Follow the on-line instructions for submitting comments.
- E-mail: *a-and-r-docket@epa.gov.*
- *Fax:* (202) 566–9744.
- *Mail:* Environmental Protection Agency, Mail Code: 2822T, 1200 Pennsylvania Ave., NW., Washington, DC 20460. Please include two copies.
- *Hand Delivery:* U.S. Environmental Protection Agency, EPA Headquarters Library, EPA West Building, Room: 3334, 1301 Constitution Avenue, NW., Washington, DC. Such deliveries are only accepted during the Docket's normal hours of operation, and special arrangements should be made for deliveries of boxed information.

Instructions: Direct your comments to Docket ID No. EPA–HQ–OA–2010–0142. EPA's policy is that all comments received will be included in the public docket without change and may be made available online at *http://www.regulations.gov,* including any personal information provided, unless the comment includes information claimed to be Confidential Business Information (CBI) or other information whose disclosure is restricted by statute. Do not submit information that you consider to be CBI or otherwise protected through *http://www.regulations.gov* or e-mail. The *http://www.regulations.gov* Web site is an "anonymous access" system, which means EPA will not know your identity or contact information unless you provide it in the body of your comment. If you send an e-mail comment directly to EPA without going through *http://www.regulations.gov* your e-mail address will be automatically captured and included as part of the comment that is placed in the public docket and made available on the Internet. If you submit an electronic comment, EPA recommends that you include your name and other contact information in the body of your comment and with any disk or CD–ROM you submit. If EPA cannot read your comment due to technical difficulties and cannot contact you for clarification, EPA may not be able to consider your comment. Electronic files should avoid the use of special characters, any form of encryption, and be free of any defects or viruses. For additional information about EPA's public docket visit the EPA Docket Center homepage at *http://www.epa.gov/oar/dockets.html.*

Docket: All documents in the docket are listed in the *http://www.regulations.gov* index. Although listed in the index, some information is not publicly available, *e.g.,* CBI or other information whose disclosure is restricted by statute. Certain other material, such as copyrighted material, will be publicly available only in hard copy. Publicly available docket materials are available either electronically in *http://www.regulations.gov* or in hard copy at the EPA Docket Center, EPA West Building, EPA Headquarters Library, Room 3334, 1301 Constitution Avenue, NW., Washington, DC. The Public Reading Room is open from 8:30 a.m. to 4:30 p.m., Monday through Friday, excluding legal holidays. The telephone number for the Public Reading Room is (202) 566–1744, and the telephone number for the Air Docket is (202) 566–1742.

FOR FURTHER INFORMATION CONTACT: Rich Wilcox, Assessment and Standards Division, Office of Transportation and Air Quality, 2000 Traverwood Drive, Ann Arbor, MI 48105; telephone number: (734) 214–4390; fax number: (734) 214–4050; e-mail address: *wilcox.rich@epa.gov.*

SUPPLEMENTARY INFORMATION:

I. Why is EPA using a Direct Final Rule?

EPA is publishing this rule without a prior proposal because we view this action as noncontroversial and anticipate no adverse comment. However, in the "Proposed Rules" section of today's **Federal Register** publication, we are publishing a separate document that will serve as the proposal to adopt the provisions in this Direct Final Rule if adverse comments are received on this rule. We will not institute a second comment period on this action, however. Any parties interested in commenting must do so at this time. For further information about commenting on this rule, *see* the **ADDRESSES** section of this document.

If EPA receives adverse comment or a request for public hearing regarding this rule or any discrete portion of this rule, we will publish a timely withdrawal of the rule, or that portion of the rule that has received adverse comment, in the **Federal Register** informing the public that this direct final rule, or the portion of the rule that has received adverse comment, will not take effect. We would address all public comments in any subsequent final rule based on the proposed rule.

II. Does this action apply to me?

This action will affect companies that manufacture and certify all-terrain vehicles for sale in the United States.

Category	NAICS code [a]	Examples of potentially affected entities
Industry	336112, 336120	Engine and Truck Manufacturers.
Industry	333112	Manufacturers of lawn and garden tractors.
Industry	333618	Manufacturers of new engines.
Industry	482110, 482111, 482112	Railroad owners and operators.
Industry	811112, 811198	Independent commercial importers of vehicles and parts.

[a] North American Industry Classification System (NAICS).

To determine whether particular activities may be affected by this action, you should carefully examine the regulations. You may direct questions regarding the applicability of this action as noted in **FOR FURTHER INFORMATION CONTACT**.

III. What should I consider as I prepare my comments for EPA?

A. Submitting CBI. Do not submit this information to EPA through *http://www.regulations.gov* or e-mail. Clearly mark the part or all of the information that you claim to be CBI. For CBI information in a disk or CD–ROM that you mail to EPA, mark the outside of the disk or CD–ROM as CBI and then identify electronically within the disk or CD–ROM the specific information that is claimed as CBI. In addition to one complete version of the comment that includes information claimed as CBI, a copy of the comment that does not contain the information claimed as CBI must be submitted for inclusion in the public docket. Information so marked will not be disclosed except in accordance with procedures set forth in 40 CFR part 2.

B. Tips for Preparing Your Comments. When submitting comments, remember to:

- Identify the rulemaking by docket number and other identifying

information (subject heading, **Federal Register** date and page number).

- Follow directions—The agency may ask you to respond to specific questions or organize comments by referencing a Code of Federal Regulations (CFR) part or section number.
- Explain why you agree or disagree; suggest alternatives and substitute language for your requested changes.
- Describe any assumptions and provide any technical information and/or data that you used.
- If you estimate potential costs or burdens, explain how you arrived at your estimate in sufficient detail to allow for it to be reproduced.
- Provide specific examples to illustrate your concerns, and suggest alternatives.
- Explain your views as clearly as possible, avoiding the use of profanity or personal threats.
- Make sure to submit your comments by the comment period deadline identified.

IV. Details of the Rule

A. Revision of 40 CFR Part 86 Subpart T To Revise the In-Use Testing Program for Heavy-Duty Diesel Engines

1. Background

The manufacturer-run, in-use testing program for heavy-duty diesel vehicles that are used on the highway was promulgated in June 2005 to monitor the emissions performance of the engines used in 2007 and later model year vehicles when operated under a wide range of real world driving conditions.[1] The program is specifically intended to monitor compliance with the applicable Not-to-Exceed (NTE) exhaust emission standards for non-methane hydrocarbons (NMHC), carbon monoxide (CO), oxides of nitrogen (NO_X), and particulate matter (PM). It requires each manufacturer of heavy-duty highway diesel engines to assess the in-use exhaust emissions from their engines using onboard, portable emission measurement systems (PEMS) during typical operation while on the road. The PEMS unit must meet the requirements of 40 CFR part 1065 subpart J.

The program was amended in March 2008 to delay some of the implementation dates and reporting deadlines and to adopt final PEMS measurement "accuracy" margins for gaseous emissions (*i.e.,* NMHC, CO, and NO_X).[2] The development of PEMS accuracy margins are further described below.

The in-use testing program began with a mandatory two-year pilot program for gaseous emissions in calendar years 2005 and 2006. The program also included a pilot program for PM emissions in calendar years 2007 and 2008. The programs are fully enforceable after their respective pilot program ends, *i.e.,* the 2007 calendar year for gaseous emissions and the 2009 calendar year for PM emissions. Fully enforceable means that engines found not compliant after this time frame could be subject to a compliance action.

The in-use testing program is based on the NTE emission standards. For the purposes of the in-use testing program, EPA established a vehicle pass/fail criterion for each pollutant that compares a vehicle's measured in-use emissions to a corresponding numerical compliance limit, *i.e.,* NTE threshold. The NTE threshold for each pollutant is the sum of the NTE standard, any in-use compliance testing margin that is already allowed by the regulations, and a new emission measurement accuracy margin associated with the use of PEMS. The PEMS accuracy margin is the difference between the emission measurement "error" for the portable instrument and the measurement "error" for "laboratory grade" instruments that are used to test vehicles or engines on a dynamometer in a laboratory setting. This accuracy margin is expressed in the same numerical terms as the applicable NTE emission standards, i.e., grams of pollutant per brake horsepower-hour (g/bhp-hr).

When the in-use testing program was first established in June of 2005, there was uncertainty regarding what specific accuracy margins should be used in the in-use testing program, since the portable measurement devices that were expected to be used in the program had not been rigorously tested at that time. As a result, we originally promulgated interim accuracy margins for use in the pilot programs.[3] These interim values were believed to represent an upper bound of the possible instrumentation variability based on our experience with portable and laboratory instruments and test methods. Subsequently, we adopted final values for gaseous pollutants based on the cooperative research program described below.[4]

In May of 2005, shortly before the in-use test program was promulgated, EPA entered into a memorandum of agreement (MOA) with the California Air Resources Board (CARB) and the manufacturers of heavy-duty highway diesel engines (through the Engine Manufacturers Association (EMA)) to develop "data driven" emission measurement allowances through a comprehensive research, development, and demonstration program for the fully enforceable programs.[5] The overall test program was designed to be completed in two phases. The first phase addressed gaseous emission accuracy margins and the second phase addressed the PM emission accuracy margin. The remainder of this discussion focuses on the final PEMS accuracy measurement for PM, since the final margins for gaseous emissions have already been adopted.

The MOA and the June 2005 final rulemaking addressed the consequences of failing to complete the accuracy margin development work in time for the scheduled start of the PM enforceable program.[6] [7] Two provisions in these documents are most relevant to today's rule. The first provision addresses short term delays in receiving the final accuracy margins. Specifically, for each month the accuracy margins are delayed beyond the agreed upon dates, then the affected enforceable program would be delayed by the same number of months up to three months. The second provision, which is most relevant to today's action, addresses delays in excess of three months. In particular, if the final accuracy margin and documentation were delayed more than three months from November 1, 2008, then the affected PM enforceable program would be placed in abeyance for a year and the respective pilot program would be continued for calendar year 2009 using the interim

[1] *See* "Control of Emissions of Air Pollution From New Motor Vehicles: In-Use Testing for Heavy-Duty Diesel Engines and Vehicles, 70 FR 34594 (June 14, 2005).

[2] *See* "Control of Emissions of Air Pollution From New Motor Vehicles; Emission Measurement Accuracy Margins for Portable Emission Measurement Systems and Program Revisions, 73 FR 13441 (March 13, 2008).

[3] The interim additive accuracy margins for the pilot programs are: NMHC = 0.17 g/bhp-hr, NO_X = 0.50 g/bhp-hr, CO = 0.60 g/bhp-hr, and PM = 0.10 g/bhp-hr.

[4] The final additive accuracy margins for the enforceable gaseous programs are: NMHC = 0.01 g/bhp-hr, NO_X = 0.15 g/bhp-hr, and CO = 0.25 g/bhp-hr.

[5] *See* "Memorandum of Agreement, Program to Develop Emission Measurement Accuracy Margins for Heavy-Duty In-Use Testing," dated May 2005. A copy of the memorandum is available in the public docket for this rule and at the EPA/OTAQ Web site (*http://www.epa.gov/otaq/hd-hwy.htm*).

[6] *See* "Memorandum of Agreement, Program to Develop Emission Measurement Accuracy Margins for Heavy-Duty In-Use Testing," dated May 2005. A copy of the memorandum is available in the public docket for this rule and at the EPA/OTAQ Web site (*http://www.epa.gov/otaq/hd-hwy.htm*).

[7] *See* "Control of Emissions of Air Pollution From New Motor Vehicles: In-Use Testing for Heavy-Duty Diesel Engines and Vehicles, 70 FR 34624 (June 14, 2005).

allowance. If necessary, this programmatic adjustment would be repeated in subsequent years until the final PM accuracy margin was identified.

2. Particulate Matter Emission Measurement Margin for Portable Emission Measurement Systems

The MOA described above called for development of a comprehensive test plan for determining the final emission measurement accuracy margins for the manufacturer-run, in-use testing program.[8] Generally, the detailed plan included a methodology that called for: (1) Comprehensive engine testing in the laboratory to assess the agreed upon sources of possible error and the resultant measurement variability between the PEMS and laboratory instrumentation and measurement methods; (2) the effects of environmental conditions on PEMS error and the variability in key engine parameters supplied by the engine's electronic controls to the PEMS; (3) the development of a statistically-based computer model to simulate effects of all sources of error on the final measurement accuracy margin; and (4) validation of the simulation model results and resulting accuracy margin against data generated through actual in-use field testing using simultaneous on-vehicle measurements from a mobile emissions laboratory (*i.e.,* laboratory-grade instruments mounted inside a trailer) and a PEMS unit. This validation step is important because it provides confidence that the simulation model results reflect reasonable accuracy margin. If the two methods do not statistically agree, then there may be possible errors in the simulation model, the in-use mobile emissions testing results, or both. The test plan also contained the statistically-based algorithms for calculating the data-driven margin for PM from in-use data.

After the simulation modeling results were completed, the test plan called for the final accuracy margin to be determined by the following generalized process. First, select the PEMS with the lowest or minimum positive value. Second, select the calculation method that has the lowest or minimum positive value. Third, and finally, use the results from that method to determine the final measurement accuracy margin.

The cooperative test program for PM as described in the MOA is complete and a final report has been issued.[9] Two PEMS units from different manufacturers were evaluated in the validation phase. When the predicted results from the model simulations for one of the PEMS units were compared to the mobile emissions laboratory results, the model did not validate for PM. It was determined from analyzing the results, that the PEMS exhibited a negative bias that was more pronounced during the validation tests when compared to the model development tests. The model did validate for the PEMS from the other manufacturer. Based on these results for that instrument, EPA, ARB, and EMA selected the final measurement allowance value and agreed to conclude the test program. The resultant final emission measurement accuracy margin is 0.006 g/bhp-hr for PM. The derivation of this value is documented in the final report referenced above.

3. Delaying the Enforceable PM Program From 2009 to 2011

As described above, the PM accuracy margin test program has been completed. However due to unexpected delays in beginning the test program, issues in the development of PM PEMS technology, and other challenges in conducting the work, the program took two years longer than originally anticipated. Accordingly, in-use test program regulations require that the first two years of the previously adopted enforceable program, which was originally scheduled for the calendar year 2009, be placed into abeyance for two years. Hence, the enforceable PM program will now begin in 2011 calendar year.

As already noted, the current in-use test program regulations require that the PM pilot program, which began in the 2007 calendar year, be continued for an additional two years through calendar year 2010. This would result in four years of pilot testing for PM. However, our current assessment shows that such extended pilot program testing is unnecessary as described below.

The intent of the original two-year pilot program for PM was to make certain that engine manufacturers had adequate real-world operational experience, *i.e.,* from recruiting vehicles to submitting test reports to EPA, to ensure a successful start of the subsequent fully enforceable program.[10] Manufacturers have reached the May 31, 2010 reporting deadline for the 2007 calendar year PM pilot program. Also, engine manufacturers have completed a substantial amount of in-use testing for gaseous pollutants, *i.e.,* NMHC, CO, and NO_X. More specifically, two years of gaseous emissions pilot testing (2005 and 2006 calendar years) and two years of the fully enforceable program (2007 and 2008 calendar years) for these pollutants have been completed. Gaseous pollutant in-use testing is in many ways complementary to PM in-use testing because nearly all aspects of the test regime are the same. Even certain parts of the portable emission measurement system instrumentation are used to measure both types of pollutants. Engine manufacturers, therefore, have already had a substantial amount of experience conducting all aspects of in-use testing. As a result, we have concluded that the original intent for conducting the PM pilot program will be achieved by retaining the requirement for two years of pilot testing rather than expanding it to four years. Therefore, we are not extending the PM pilot testing program beyond its initial requirement of two years of testing.

As a result of the decision to delay the enforceable program for PM until the 2011 calendar year and the decision not to extend the two-year pilot program, we needed to reassess the schedule for conducting the required tests for the pilot program. Two considerations are especially important here. First, there is no apparent advantage to require that engine manufacturers conduct testing over a single, consecutive two-year period, *e.g.,* calendar years 2007 and 2008. Second, there may be a benefit to allowing each manufacturer to decide which two years out of the four possible years to conduct its PM pilot testing. This is because the PM PEMS technology has continued to improve and mature as a result of the ongoing cooperative test program for developing the final PM accuracy margin. As a result, a manufacturer may benefit from an additional flexibility in selecting when to complete the PM pilot program in order to gain experience with PEMS that will be more like the instrumentation they may use for the 2011 enforceable program. Therefore,

[8] *See* "Test Plan to Determine PEMS Measurement Allowance for the PM Emissions Regulated under the Manufacturer-Run Heavy-Duty Diesel Engine In-Use Testing Program, for the U.S. Environmental Protection Agency, California Air Resources Board, and Engine Manufacturers Association", dated November 11, 2008 (published by EPA August 2010), EPA report number: EPA–420–B–10–901. A copy of the report is available in the public docket for this rule and at the EPA/OTAQ Web site (*http://www.epa.gov/otaq/hd-hwy.htm*).

[9] *See* "PM PEMS Measurement Allowance Determination: Final Report," U.S. Environmental Protection Agency, June 2010 (published by EPA August 2010), EPA report number: EPA–420–R–10–902. A copy of the report is available in the public docket for this rule and at the EPA/OTAQ Web site (*http://www.epa.gov/otaq.hd-hwy.htm*).

[10] *See* "Control of Emissions of Air Pollution From New Motor Vehicles: In-Use Testing for Heavy-Duty Diesel Engines and Vehicles, 70 FR 34614 (June 14, 2005).

we are allowing each manufacturer to report test results in any two out of the potentially four calendar years for completing its testing obligations under the PM pilot program.

Finally, we previously designated the engine families for the 2007, 2008, and 2009 calendar years that each engine manufacturer must test, and we have recently designated engine families for the 2010 calendar year program. Given the new flexibility in choosing which two of the four years to fulfill their testing obligations for the PM pilot program, each engine manufacturer must notify EPA by letter to the Agency's designated compliance officer to explicitly identify both: (1) The designated calendar year(s) where in-use PM pilot program testing will be forgone, and (2) the designated calendar year(s) when their obligations for PM pilot testing will be completed. This notification must be provided to the Agency by January 7, 2011 and must be quickly updated if planned testing changes for any calendar year.

4. Removing the PM Accuracy Test Program From the Regulations

We are taking this opportunity to delete the references in § 86.1935 that pertain to the final report for PM emission accuracy margin and the consequences that would ensue if the report was delayed beyond certain dates. These provisions are no longer needed because accuracy margin for PM pollutants are being promulgated in this Direct Final Rule. This will result in removal of § 86.1935 from the regulations in its entirety and any references made to § 86.1935 throughout 40 CFR part 86.

B. Revisions to 40 CFR 1033.150 To Allow the Use of Earlier Model Year Switch Engines With Equivalent Emission Controls

Section 1033.150(e) allows the use of certified 2008 and later nonroad engines in switch locomotives. We are extending the allowance to include nonroad engines produced in model years before 2008 as long as they were certified to the same standards as 2008 engines. This extension will not have any emissions impact since the engines will be required to have the same emission controls with or without the revisions.

C. Revision of 40 CFR Part 1065 To Clarify the Requirements for PM PEMS Testing

We are taking this opportunity to make minor technical amendments to 40 CFR part 1065 that are mostly related to the requirements for in-use PM instrumentation and that arose from knowledge gained during the accuracy margin laboratory and field work mentioned in Section A. above. The changes are specified in the following paragraph. The reasons for these changes are detailed in a separate document.[11] These amendments have no effect on the stringency of the regulations, but simply improve increase testing efficiency, allow new measurement techniques, or otherwise clarify the regulatory requirements.

The amendments are as follows:

1. The requirement to control dilution air temperature has been removed for in-use testing;
2. An in-use filter face velocity specification has been added;
3. An in-use filter face temperature specification has been added;
4. We are specifying that there is no requirement for control of humidity control for in-situ PM analyzers;
5. We are allowing the use of a fixed molar mass for the dilute exhaust mixture for field testing;
6. We are deleting the frequency and rise/fall time specs for inertial batch PM analyzers;
7. We are adding a statement that field testing applies at any ambient temperature, pressure and humidity, unless otherwise specified in the standard setting part (*e.g.,* 40 CFR part 86 for heavy-duty highway engines);
8. We are adding language to state that EPA approves of electrostatic deposition technique for PM collection and that the technique must meet 95% collection efficiency, as validated by the manufacturer;
9. We are excluding PM PEMS from the system-response and updating-recording verification requirements;
10. We are clarifying when an HC contamination check of the sampling system should take place;
11. We are allowing the use of a PM loss correction to account for PM loss in the inertial balance, including the sample handling system for in-use testing only;
12. We are making a clarification on how to handle positive displacement pump (PDP) pressure calibrations at maximum pressure;
13. We are allowing a restart of the hot portion of the transient test if the hot start was void;
14. We are making some language changes to make the language used more consistent throughout the document; and
15. We are correcting typographical errors.

[11] *See* "List of Part 1065 Changes Resulting from HDIUT PM MA Program", dated June 2010. A copy of this list is available in the public docket for this rule.

D. Revision of 40 CFR 1065.140 To Allow the Use of Partial Flow Dilution Systems for Laboratory Transient Test Cycle PM Measurement

We are taking this opportunity to make changes to 40 CFR 1065.140(d) to allow the use of partial flow sampling systems for measurement of PM during transient test cycles for laboratory testing.

PM measurement has been traditionally performed using a full flow dilution tunnel where the entire amount of engine exhaust gas is collected and made available for sampling. With this sampling method, commonly referred to as a constant volume sampler (CVS), the size of the dilution tunnel depends on the exhaust gas volume, thus the greater the volume of exhaust gas emitted from the engine, the larger the dilution tunnel must be. As an alternative, a partial-flow dilution tunnel allows sampling of part of the total exhaust flow, which reduces the size of the sampling system. One of the drawbacks to partial flow sampling systems in the past was that the flow controllers did not have a fast enough response time to accurately respond to the changing exhaust flow rates during a transient cycle. Thus partial flow sampling systems were only allowed for use during steady-state cycle testing. Recent advancements in the development of fast response flow control systems, along with the advancement in the understanding of PM formation characteristics have made partial flow sampling systems a viable technology for use in transient applications when compared to the CVS reference method.

We currently allow the use of partial flow sampling systems for measurement of PM for steady-state and ramped modal cycle (RMC) testing and have put specifications in place in 40 CFR 1065.140(e) with respect to dilution air temperature, minimum dilution ratio, filter face temperature, and residence time to control PM formation. These specifications have further worked to improve the accuracy of partial flow systems when compared to the CVS.

We initially proposed this allowance in the locomotive and compression-ignition marine engines less than 30 liters per cylinder NPRM, but did not finalize it due to concerns over the viability of partial flow systems in transient applications.[12] [13] Since

[12] *See* "Proposed Rule: Control of Emissions of Air Pollution from Locomotives and Marine Compression-Ignition Engines Less than 30 Liters per Cylinder", 72 FR 34594 (April 3, 2007).

[13] *See* "Final Rule: Control of Emissions of Air Pollution from Locomotives and Marine Compression-Ignition Engines Less Than 30 Liters per Cylinder", 73 FR (May 6, 2008).

promulgating that rule, EPA has worked with industry to gain a better understanding of partial flow systems and the improvements that have been made over the past decade. We have also reviewed additional data supplied by engine and partial flow system equipment manufacturers showing comparisons between the traditional CVS and partial flow systems for PM measurement.[14] These data have shown that partial flow measurement of PM is a viable tool for measurement in transient applications and these systems can meet the dilution parameter control requirements in 40 CFR 1065.140 as well as the flow rate linearity requirements in 40 CFR 1065.307, Table 1, and the validation of proportional flow control requirement in 40 CFR 1065.545. Further, correlation testing involving partial flow systems and CVS based systems has shown that the partial flow method is equivalent to the CVS method via t- and f-test analysis. In light of these recent disclosures, EPA will allow the use of this measurement technique.[15]

E. Revision of 40 CFR 86.1370 To Clarify How To Handle NTE Events During Regeneration

We are taking this opportunity to further define how to handle regeneration events that occur during real world in-use NTE tests. The current text as it exists in 40 CFR 86.1370–2007(d)(2) has caused confusion with respect to determination of the NTE minimum averaging period.

This revision establishes a new method to calculate the minimum averaging period. The intent here is to minimize the number of voided NTE events due to regeneration for systems that undergo frequent and/or infrequent regeneration, while ensuring that the NTE averaging time is appropriate based on the regeneration time.

The regeneration duty cycle fraction over the course of the entire test day can be determined by dividing the mean time of the complete regeneration events (state 2) by the sum of the mean time of the non-regeneration events (state 0) and the mean time of the complete regeneration segments including time in those segments where regeneration is pending (states 1 and 2).

To determine whether an NTE that includes a regeneration event is valid, the minimum average time is determined by summing the portion of the NTE event that occurs during regeneration and dividing by the fraction of time over the entire sampling period, *i.e.,* shift-day, that regeneration occurred for complete regeneration events. This latter term is referred to as the regeneration fraction. If the duration of the NTE is greater than or equal to this minimum average time, then the NTE event is valid.[16] For example, if an NTE event was 125 seconds long and contained 25 seconds of regeneration, and regeneration fraction was 0.24, the minimum averaging time for this NTE event is 104 seconds (25/0.24=104). In this example, the NTE event would be valid.

F. Revision of 40 CFR 1065.915 To Allow the Use of ECM Fuel Rate To Determine NTE Mass Emission Rate

We are taking this opportunity to allow the use of fuel rate data that is available from the engine's electronic control module (ECM) along with other information, including the CO_2, CO, and hydrocarbon emissions to calculate the requisite exhaust flow rate for mass emission rate determination. We believe that all large horsepower nonroad diesel engines will be equipped with ECMs that report fuel flow within the time frame proposed for implementation of the in-use testing program. The ECM fuel flow rate-based methodology currently requires prior EPA approval under 40 CFR 1065.915(d)(5)(iv). This pre-approval requirement is based on past concerns with respect to the accuracy of the ECM broadcast fuel flow rate when calculating brake-specific emission results in the absence of an exhaust flow measurement. However, more recent information from the cooperative in-use emission measurement allowance program for PEMS showed that emission calculations incorporating the ECM fuel rate yielded results comparable to those using approved calculation methodology.[17] Based on that study and the inclusion of ECM derived BSFC in the determination of the accuracy margin, we are proposing to eliminate the requirement that a manufacturer must have EPA approval to use this method to determine exhaust flow rates via an amendment to 40 CFR 1065.915.

G. Revision of 40 CFR 1045.145 To Extend the Notification Deadline for Small-Volume Manufacturers of Marine SI Engines

Our current regulations for sterndrive/inboard marine SI engines allow for delayed implementation of emission standards for small-volume manufacturers making sterndrive/inboard marine SI engines (*see* § 1045.145(a)). One requirement related to this delay is for the manufacturer to notify EPA before the standards take effect. However, we have learned that there are some small-volume engine manufacturers that have not yet learned about the new emission standards. We believe it is appropriate to extend the notification deadline for these manufacturers by one year to allow for further communications related to the new requirements. With the later deadline we also need to add language in the regulation to clarify that manufacturers need to notify EPA before introducing such engines into U.S. commerce for them to have a valid temporary exemption. These revisions address the logistical challenges related to implementing the new standards without changing the effective implementation schedule of the original rule.

H. Revision of 40 CFR 1039.102 To Enable Phase Out of Tier 3 Diesel Engines

When creating 40 CFR 1039.102 (69 FR 39213, June 29, 2004), we included provisions intended to allow engine manufacturers to use emission credits to continue producing a small number of Tier 3 nonroad diesel engines after the Tier 4 standards began to apply. However, we now realize that the provisions may not work as intended because the Tier 4 averaging programs inadvertently do not allow manufacturers to show compliance with the applicable 0.19 g/kW-hr NMHC standard using credits. In today's rulemaking, we are amending this section to allow manufacturers to use credits to show compliance with alternate NO_X + HC standards. The alternate NO_X + NMHC standards for each power category would be equal to the numerical value of the applicable alternate NO_X standard of § 1039.102(e)(1) or (2) plus 0.10 g/kW-hr. Engines certified to these NO_X +NMHC standards may not generate

[14] *See* "Sierra Instruments Model BG–3 vs. CVS Multiple Engine Correlation Study", dated November 2009. A copy of this list is available in the public docket for this rule.

[15] Compliance evaluation when conducted by the Administrator, independent of the method for dilution, become the official results. Manufacturers should be prepared to demonstrate compliance with the full flow CVS even if initial certification was conducted using a partial flow dilution system. EPA will continue to use the CVS-based PM measurement method for our own compliance testing regardless of what method the manufacturer used to certify the engine.

[16] *See,* Letter from EMA to EPA, "Treatment of Overlapping NTE and Regeneration Events, (July 29, 2009). A copy of the report is available in the public docket for this rule.

[17] *See* "Determination of PEMS Measurement Allowances for Gaseous Emissions Regulated under the Heavy-Duty Diesel Engine In-Use Testing Program, dated April 2007. A copy of the report is available in the public docket for this rule and at the EPA/OTAQ Web site (*http://www.epa.gov/otaq/hd-hwy.htm*).

emission credits. Since additional 0.10 g/kW-hr for the combined standard is less than the otherwise applicable NMHC standard, there would be a small environmental benefit when manufacturers choose to certify to the alternate standards.

I. Revision of 40 CFR 1039.625 To Revise TPEM Provisions for Special High-Altitude Equipment

We have been made aware of a number of unique challenges involved in implementing Tier 4 requirements for certain specialized high-altitude equipment. In setting the Tier 4 standards in 2004, we anticipated that typical engineering challenges would arise in redesigning machines to use the new engines, and we restructured our transition program for equipment manufacturers, first established in the Tier 2/Tier 3 rule, to help manufacturers deal with these challenges. This important flexibility program has been highly successful. We do feel that a minor adjustment is warranted for the specialized high-altitude equipment identified.

This equipment is designed for use on snow and, for at least some of its operating life, at elevations more than 9,000 feet above sea level. The applications are ski area snow groomers, both alpine and cross-county, and personnel transporters used in search and rescue operations, and maintenance of utility lines and towers.

One manufacturer of this equipment, has identified a number of technical issues specific to the equipment, including: [18]

1. *Reliability:* The performance of the new engine and aftertreatment components is untested at high altitudes in winter conditions. Engine operating temperatures may be elevated at higher altitudes with potential impacts on engine performance and reliability;

2. *Cold Starting:* Diesel cold starting is aggravated at high altitudes due to lower oxygen availability. No-start situations for high-altitude equipment may be life threatening;

3. *Engine power:* The degree to which a Tier 4 engine's power is reduced, *i.e.,* derated, with increasing altitude is unproven. Excessive derate would hinder the vehicles' snow grooming function and performance;

4. *Particulate filter regeneration:* These machines operate for long periods traveling downhill with little engine load. Regeneration must be validated;

5. *Functioning in extreme conditions:* Snow groomers must reliably push and grind snow and ice in extreme conditions, including while moving up and down steep grades; and

6. *Weight:* The added weight of Tier 4 aftertreatment and cooling components will directly affect ground pressure, which can hamper a snow groomer's essential function.

In identifying these issues, the manufacturer stated that it expects two, possibly three, winters of prototype testing are needed to work through these issues and believes that flexibility in the use of exemptions provided by the Tier 4 transition program is key to enabling this. We have evaluated the technical issues, and have concluded there are likely to be some unique challenges in implementing Tier 4 for high-altitude equipment of this type.

In response, to provide modest but meaningful additional flexibility, we are removing the single engine family restriction for the use of the small volume provision allowing 700 exempted units over seven years. This additional flexibility would only apply for manufacturers of specialized high-altitude equipment (designed to commonly operate above 9,000 feet), and only in the first two model years of Tier 4 standards. Afterward, the single engine family restriction would apply. In no case would the 700 unit maximum over seven years be exceeded.

We do not expect that this change will result in a significant negative impact on any engine or equipment manufacturers. Engine manufacturers are already expecting to produce some Tier 4 engines for the transition program, and the number of additional exempted engines will be relatively small. Equipment manufacturers can either take advantage of this change, or are already able to exempt the same number of affected machines for several years under the existing transition program provisions.

We also believe the impact of this modification on Tier 4 environmental benefits will be negligible, given that: (1) It only applies to the small volume portion of the transition program, (2) the total U.S. annual sales of specialized high-altitude equipment is, at most, a few hundred, (3) much of this equipment operates for only a part of the year, (4) the modification only applies in the first two Tier 4 model years, and does not increase the overall exemption limit of 700 over seven years.

J. Revision of 40 CFR 1054.101 To Clarify Prohibitions Related to Handheld Small SI Engines Installed in Nonhandheld Equipment

The existing regulations related to emission standards for nonroad spark-ignition engines below 19 kW specifically prohibit the sale of nonhandheld equipment equipped with handheld engines. The regulations in § 1054.101 state that handheld engines may not be installed in nonhandheld equipment, but the regulatory text does not state that this is prohibited under § 1068.101 or identify which penalty provisions apply. In this rule we are adding a statement to § 1054.101(e) to describe how this action violates the prohibited acts identified in § 1068.101, consistent with the regulations under 40 CFR part 90.

K. Revision of 40 CFR 1042 Appendix II To Correct Time Weighting at Mode for Engines Certifying to the E2 RMC Cycle

The existing regulations contain an error in the time at mode for each steady-state point when certifying an engine to the E2 ramped modal cycle (RMC). When the E2 RMC cycle was generated, the times at mode were not correct based on the weighting of the discrete-mode cycle. In this rule we are correcting the time at mode for all four steady-state portions of the E2 RMC cycle to correspond with the mode weighting for the discrete-mode test.

V. Statutory and Executive Order Reviews

A. Executive Order 12866: Regulatory Planning and Review

This action is not a "significant regulatory action" under the terms of Executive Order (EO) 12866 (58 FR 51735, October 4, 1993) and is therefore not subject to review under the EO. EPA is taking direct final action on several revisions to EPA's mobile source emission programs standards and test procedures. This direct final rule merely contains several minor and noncontroversial amendments to EPA's mobile source emission programs as described in the Summary and Section IV. Details of the Rule.

B. Paperwork Reduction Act

This action does not impose a new information collection burden under the provisions of the Paperwork Reduction Act, 44 U.S.C. 3501 *et seq.* Burden is defined at 5 CFR 1320.3(b). It merely contains several minor and noncontroversial technical amendments to EPA's mobile source emission programs as described in the Summary and Section IV. Details of the Rule. Therefore, there are no new paperwork requirements associated with this rule.

C. Regulatory Flexibility Act

For purposes of assessing the impacts of this final rule on small entities, a small entity is defined as: (1) A small

[18] E-mail from Jean-Claude Perreault, Prinoth Ltd, to Byron Bunker, U.S. EPA, "Prinoth technical information", June 8, 2010.

business that meet the definition for business based on SBA size standards at 13 CFR 121.201; (2) a small governmental jurisdiction that is a government of a city, county, town, school district or special district with a population of less than 50,000; and (3) a small organization that is any not-for-profit enterprise which is independently owned and operated and is not dominant in its field.

After considering the economic impacts of today's final rule on small entities, EPA has concluded that this action will not have a significant economic impact on a substantial number of small entities. This final rule will not impose any new requirements on small entities.

EPA has determined that it is not necessary to prepare a regulatory flexibility analysis in connection with this direct final rule. It merely contains several minor and noncontroversial technical amendments to EPA's mobile source emission programs as described in the Summary and Section IV. Details of the Rule. We have, therefore, concluded that today's final rule will not affect the regulatory burden for small entities and will not have a significant economic impact on a substantial number of small entities.

D. Unfunded Mandates Reform Act

Title II of the Unfunded Mandates Reform Act of 1995 (UMRA), Public Law 104–4, establishes requirements for federal agencies to assess the effects of their regulatory actions on state, local, and tribal governments and the private sector. Under Section 202 of the UMRA, EPA generally must prepare a written statement, including a cost-benefit analysis, for proposed and final rules with "federal mandates" that may result in expenditures to state, local, and tribal governments, in the aggregate, or to the private sector, of $100 million or more in any one year. Before promulgating an EPA rule for which a written statement is needed, Section 205 of the UMRA generally requires EPA to identify and consider a reasonable number of regulatory alternatives and adopt the least costly, most cost-effective, or least burdensome alternative that achieves the objectives of the rule. The provisions of Section 205 do not apply when they are inconsistent with applicable law. Moreover, Section 205 allows EPA to adopt an alternative other than the least costly, most cost-effective, or least burdensome alternative if the Administrator publishes with the final rule an explanation of why such an alternative was adopted.

Before EPA establishes any regulatory requirements that may significantly or uniquely affect small governments, including tribal governments, it must have developed under Section 203 of the UMRA a small government agency plan. The plan must provide for notifying potentially affected small governments, enabling officials of affected small governments to have meaningful and timely input in the development of EPA regulatory proposals with significant federal intergovernmental mandates, and informing, educating, and advising small governments on compliance with the regulatory requirements.

This rule contains no federal mandates for state, local, or tribal governments as defined by the provisions of Title II of the UMRA. The rule imposes no enforceable duties on any of these governmental entities. Nothing in the rule would significantly or uniquely affect small governments. EPA has determined that this rule contains no federal mandates that may result in expenditures of more than $100 million to the private sector in any single year. It merely contains several minor and noncontroversial technical amendments to EPA's mobile source emission programs as described in the Summary and Section IV. Details of the Rule. The requirements of UMRA, therefore, do not apply to this action.

E. Executive Order 13132: Federalism

Executive Order 13132, entitled "Federalism" (64 FR 43255, August 10, 1999), requires EPA to develop an accountable process to ensure "meaningful and timely input by State and local officials in the development of regulatory policies that have federalism implications." "Policies that have federalism implications" are defined in the Executive Order to include regulations that have "substantial direct effects on the States, on the relationship between the national government and the States, or on the distribution of power and responsibilities among the various levels of government."

Under Section 6 of Executive Order 13132, EPA may not issue a regulation that has federalism implications, that imposes substantial direct compliance costs, and that is not required by statute, unless the Federal government provides the funds necessary to pay the direct compliance costs incurred by State and local governments, or EPA consults with State and local officials early in the process of developing the regulation. EPA also may not issue a regulation that has federalism implications and that preempts State law, unless the Agency consults with State and local officials early in the process of developing the regulation.

Section 4 of the Executive Order contains additional requirements for rules that preempt State or local law, even if those rules do not have federalism implications (*i.e.,* the rules will not have substantial direct effects on the States, on the relationship between the national government and the states, or on the distribution of power and responsibilities among the various levels of government). Those requirements include providing all affected State and local officials notice and an opportunity for appropriate participation in the development of the regulation. If the preemption is not based on express or implied statutory authority, EPA also must consult, to the extent practicable, with appropriate State and local officials regarding the conflict between State law and Federally protected interests within the agency's area of regulatory responsibility.

This rule does not have federalism implications. It will not have substantial direct effects on the States, on the relationship between the national government and the States, or on the distribution of power and responsibilities among the various levels of government, as specified in Executive Order 13132. This direct final rule merely contains several minor and noncontroversial technical amendments to EPA's mobile source emission programs as described in the Summary and Section IV. Details of the Rule.

F. Executive Order 13175: Consultation and Coordination With Indian Tribal Governments

Executive Order 13175, entitled "Consultation and Coordination with Indian Tribal Governments" (59 FR 22951, November 6, 2000), requires EPA to develop an accountable process to ensure "meaningful and timely input by tribal officials in the development of regulatory policies that have tribal implications." "Policies that have tribal implications" is defined in the Executive Order to include regulations that have "substantial direct effects on one or more Indian tribes, on the relationship between the Federal government and the Indian tribes, or on the distribution of power and responsibilities between the Federal government and Indian tribes."

This rule does not have tribal implications. It will not have substantial direct effects on tribal governments, on the relationship between the Federal government and Indian tribes, or on the distribution of power and responsibilities between the Federal government and Indian tribes, as specified in Executive Order 13175.

This rule does not uniquely affect the communities of Indian Tribal Governments. Further, no circumstances specific to such communities exist that would cause an impact on these communities beyond those discussed in the other sections of this rule. This direct final rule merely contains several minor and noncontroversial technical amendments to EPA's mobile source emission programs as described in the Summary and Section IV. Details of the Rule. Thus, Executive Order 13175 does not apply to this rule.

G. Executive Order 13045: Protection of Children From Environmental Health and Safety Risks

Executive Order 13045, "Protection of Children from Environmental Health Risks and Safety Risks" (62 FR 19885, April 23, 1997) applies to any rule that (1) is determined to be "economically significant" as defined under Executive Order 12866, and (2) concerns an environmental health or safety risk that EPA has reason to believe may have a disproportionate effect on children. If the regulatory action meets both criteria, Section 5–501 of the Order directs the Agency to evaluate the environmental health or safety effects of the planned rule on children, and explain why the planned regulation is preferable to other potentially effective and reasonably feasible alternatives considered by the Agency.

This rule is not subject to the Executive Order because it is not economically significant as defined in EO 12866, and because the Agency does not have reason to believe the environmental health or safety risks addressed by this action present a disproportionate risk to children. This direct final rule merely contains several minor and noncontroversial technical amendments to EPA's mobile source emission programs as described in the Summary and Section IV. Details of the Rule.

H. Executive Order 13211: Actions That Significantly Affect Energy Supply, Distribution, or Use

This rule is not a "significant energy action" as defined in Executive Order 13211, "Actions Concerning Regulations That Significantly Affect Energy Supply, Distribution, or Use" (66 FR 28355, May 22, 2001) because it is not likely to have a significant adverse effect on the supply, distribution or use of energy. This direct final rule merely contains several and noncontroversial minor technical amendments to EPA's mobile source emission programs as described in the Summary and Section IV. Details of the Rule.

I. National Technology Transfer and Advancement Act

Section 12(d) of the National Technology Transfer and Advancement Act of 1995 ("NTTAA"), Public Law 104–113, Section 12(d) (15 U.S.C. 272 note) directs EPA to use voluntary consensus standards in its regulatory activities unless doing so would be inconsistent with applicable law or otherwise impractical. Voluntary consensus standards are technical standards (such as materials specifications, test methods, sampling procedures, and business practices) that are developed or adopted by voluntary consensus standards bodies. NTTAA directs EPA to provide Congress, through OMB, explanations when the Agency decides not to use available and applicable voluntary consensus standards.

This direct final rule does not involve technical standards. It merely contains several minor and noncontroversial technical amendments to EPA's mobile source emission programs as described in the Summary and Section IV. Details of the Rule. Thus, we have determined that the requirements of the NTTAA do not apply.

J. Executive Order 12898: Federal Actions To Address Environmental Justice in Minority Populations and Low-Income Populations

Executive Order (EO) 12898 (59 FR 7629 (Feb. 16, 1994)) establishes federal executive policy on environmental justice. Its main provision directs federal agencies, to the greatest extent practicable and permitted by law, to make environmental justice part of their mission by identifying and addressing, as appropriate, disproportionately high and adverse human health or environmental effects of their programs, policies, and activities on minority populations and low-income populations in the United States.

EPA has determined that this rule will not have disproportionately high and adverse human health or environmental effects on minority or low-income populations because it does not affect the level of protection provided to human health or the environment. This direct final rule merely contains several minor and noncontroversial technical amendments to EPA's mobile source emission programs as described in the Summary and Section IV. Details of the Rule.

K. Congressional Review Act

The Congressional Review Act, 5 U.S.C. 801 et seq., as amended by the Small Business Regulatory Enforcement Fairness Act of 1996, generally provides that before a rule may take effect, the agency promulgating the rule must submit a rule report, which includes a copy of the rule, to Congress and the Comptroller General of the United States. We will submit a report containing this rule and other required information to the U.S. Senate, the U.S. House of Representatives, and the Comptroller General of the United States before publication of the rule in the **Federal Register**. A major rule cannot take effect until 60 days after it is published in the **Federal Register**. This action is not a "major rule" as defined by 5 U.S.C. 804(2). This direct final rule is effective on January 7, 2011.

L. Statutory Authority

The statutory authority for this action comes from 42 U.S.C. 7401–7671q and 33 U.S.C. 1901–1915.

List of Subjects

40 CFR Part 86

Environmental protection, Administrative practice and procedure, Confidential business information, Labeling, Motor vehicle pollution, Reporting and recordkeeping requirements.

40 CFR Part 1033

Environmental protection, Administrative practice and procedure, Confidential business information, Incorporation by reference, Labeling, Penalties, Railroads, Reporting and recordkeeping requirements.

40 CFR Part 1039

Environmental protection, Administrative practice and procedure, Air pollution control, Confidential business information, Imports, Incorporation by reference, Labeling, Penalties, Reporting and recordkeeping requirements, Warranties.

40 CFR Part 1042

Environmental protection, Administrative practice and procedure, Air pollution control, Confidential business information, Imports, Incorporation by reference, Labeling, Penalties, Vessels, Reporting and recordkeeping requirements, Warranties.

40 CFR Part 1045

Environmental protection, Administrative practice and procedure, Air pollution control, Confidential business information, Imports, Incorporation by reference, Labeling, Penalties, Reporting and recordkeeping requirements, Warranties.

40 CFR Part 1054

Environmental protection, Administrative practice and procedure, Air pollution control, Confidential business information, Imports, Labeling, Penalties, Reporting and recordkeeping requirements, Warranties.

40 CFR Part 1065

Administrative practice and procedure, Air pollution control, Reporting and recordkeeping requirements, Research.

Dated: October 29, 2010.

Lisa P. Jackson,

Administrator.

■ For the reasons set out in the preamble, title 40, chapter I of the Code of Federal Regulations is amended as follows:

PART 86—CONTROL OF EMISSIONS FROM NEW AND IN-USE HIGHWAY VEHICLES AND ENGINES

■ 1. The authority citation for part 86 continues to read as follows:

Authority: 42 U.S.C. 7401–7671q.

Subpart N—[Amended]

■ 2. Section 86.1370–2007 is amended revising paragraph (d) to read as follows:

§ 86.1370–2007 Not-To-Exceed test procedures.

* * * * *

(d) *Not-to-exceed control area limits.* (1) When operated within the Not-To-Exceed Control Area defined in paragraph (b) of this section, diesel engine emissions shall not exceed the applicable Not-To-Exceed Limits specified in § 86.007–11(a)(4) when averaged over any time period greater than or equal to 30 seconds, except where a longer minimum averaging period is required by paragraph (d)(2) of this section.

(2) For engines equipped with emission controls that include discrete regeneration events and that send a recordable electronic signal indicating the start and end of the regeneration event, determine the minimum averaging period for each NTE event that includes regeneration active operation as described in paragraph (d)(2)(i) of this section. This minimum averaging period is used to determine whether the individual NTE event is a valid NTE event. For engines equipped with emission controls that include multiple discrete regeneration events (*e.g.,* de-soot, de-NO_X, de-SO_X, etc.) and associated electronic signals, if an NTE event includes regeneration active operation on multiple regeneration signals, determine the minimum averaging period for each regeneration signal according to paragraph (d)(2)(i) of this section and use the longest period. This minimum averaging period applies if it is longer than 30 seconds. The electronic signal from the engine's ECU must indicate non-regeneration and regeneration operation. Regeneration operation may be further divided into regeneration pending and regeneration active operation. These are referred to as states 0, 1, and 2 for non-regeneration, regeneration pending, and regeneration active operation, respectively. No further subdivision of these states are allowed for use in this paragraph (d)(2). Where the electronic signal does not differentiate between regeneration pending and active operation, take the regeneration signal to mean regeneration active operation (state 2). A complete non-regeneration event is a time period that occurs during the course of the shift-day that is bracketed by regeneration operation, which is either regeneration active operation (state 2) or regeneration pending operation (state 1). A complete regeneration event is a time period that occurs during the course of the shift-day that is bracketed before and after by non-regeneration operation (state 0); a complete regeneration event includes any time in the event where regeneration is pending (state 1). The following figure provides an example of regeneration events during a shift-day:

BILLING CODE 6560–50–P

Figure 1 of § 86.1370-2007

Regeneration Events During a Shift-day

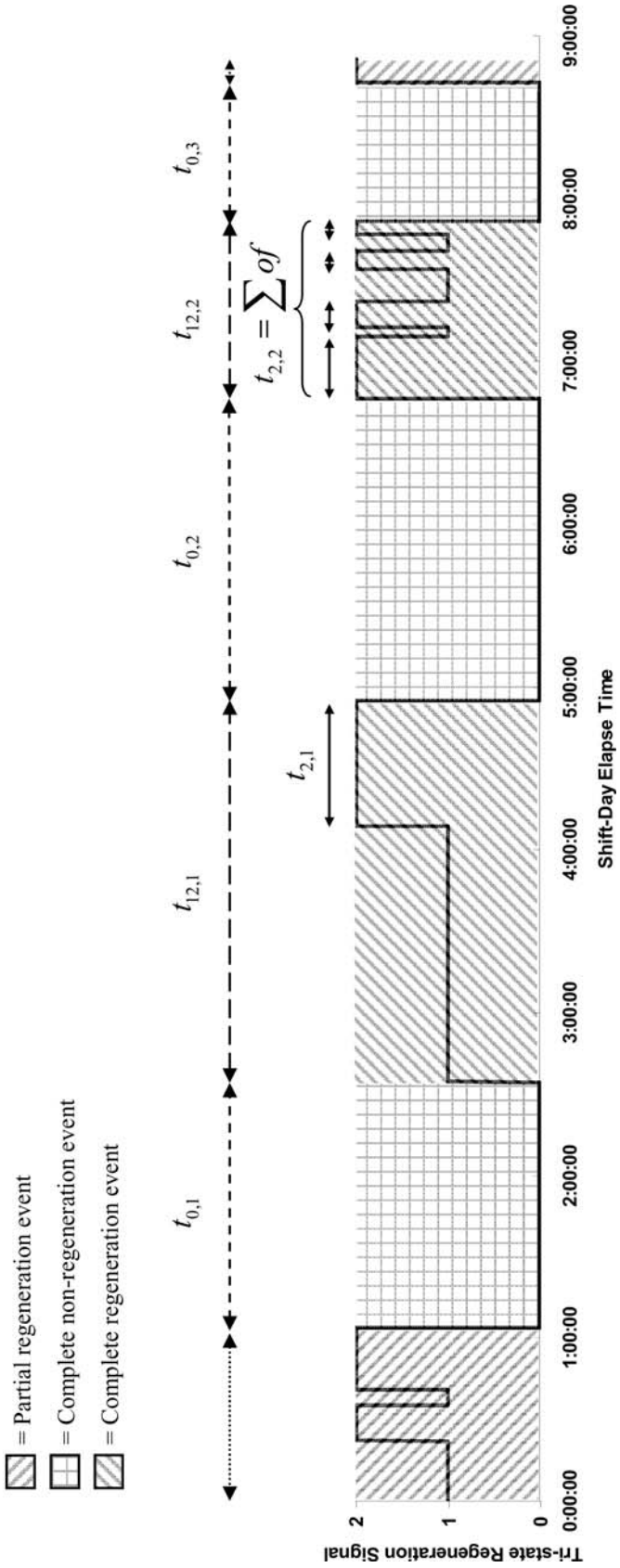

BILLING CODE 6560–50–C

(i) Calculate the minimum averaging period, $t_{NTE,min}$, for each candidate NTE event as follows:

$$t_{NTE,min} = \frac{\sum_{i=1}^{N} t_{2,NTE,i}}{RF}$$

Where:

i = an indexing variable that represents periods of time within the candidate NTE event where the electronic signal indicates regeneration active operation (state 2).

N = the number of periods of time within the candidate NTE event where the electronic signal indicates regeneration active operation (state 2).

$t_{2,NTE,i}$ = the duration of the i-th time period within the candidate NTE event where the electronic signal indicates regeneration active operation (state 2), in seconds.

RF = regeneration fraction over the course of the shift-day, as determined in paragraph (d)(2)(ii) of this section.

(ii) Calculate the regeneration fraction, *RF,* over the course of a shift-day as follows:

$$RF = \frac{\frac{\sum_{i=1}^{N_{12}} \sum_{j=1}^{N_{2,i}} t_{2,i,j}}{N_{12}}}{\frac{\sum_{k=1}^{N_0} t_{0,k}}{N_0} + \frac{\sum_{i=1}^{N_{12}} t_{12,i}}{N_{12}}}$$

Where:

i = an indexing variable that represents complete regeneration events within the shift-day.

j = an indexing variable that represents periods of time within the i-th complete regeneration event where the electronic signal indicates regeneration active operation (state 2).

k = an indexing variable that represents complete non-regeneration events within the shift-day.

N_0 = the number of complete non-regeneration events within the shift-day.

N_{12} = the number of complete regeneration events within the shift-day.

$N_{2,i}$ = the number of periods of within the i-th complete regeneration event where the electronic signal indicates regeneration active operation (state 2).

$t_{0,k}$ = the duration of the k-th complete non-regeneration event within the shift-day, in seconds.

$t_{12,i}$ = the duration of the i-th complete regeneration event within the shift-day, in seconds, including time in those events where regeneration is pending (state 1).

$t_{2,i,j}$ = the duration of the j-th time period within the i-th complete regeneration event where the electronic signal indicates regeneration active operation (state 2), in seconds. Note that this excludes time in each complete regeneration event where regeneration is pending (state 1).

(iii) If either N_0 or N_{12} are zero, then RF cannot be calculated and all candidate NTE events that include regeneration active operation are void.

(iv) Compare the minimum averaging period for the candidate NTE event, $t_{NTE,min}$, to the actual NTE duration, $t_{NTE.}$ If $t_{NTE} < t_{NTE,min}$ the candidate NTE event is void. If $t_{NTE} \geq t_{NTE,min}$ the candidate NTE event is valid. It can also therefore be included in the overall determination of vehicle-pass ratio according to § 86.1912.

(v) You may choose to not void emission results for a candidate NTE event even though we allow you to void the NTE event under paragraph (d)(2)(iii) or (iv) of this section. If you choose this option, you must include the results for all regulated pollutants that were measured and validated during the NTE event for a given NTE monitoring system.

(vi)(A) The following is an example of calculating the minimum averaging period, $t_{NTE,min}$, for a candidate NTE event. See Figure 1 of this section for an illustration of the terms to calculate the regeneration fraction, *RF.* For this example there are three complete non-regeneration events and two complete regeneration events in the shift-day.

$N_0 = 3$

$N_{12} = 2$

(B) The duration of the three complete non-regeneration events within the shift-day are:

$t_{0,1} = 5424$ s

$t_{0,2} = 6676$ s

$t_{0,3} = 3079$ s

(C) The sums of all the regeneration active periods in the two complete regeneration events are:

$$\sum_{j=1}^{N_{2,1}} t_{2,1,j} = t_{2,1} = 2769 \text{ s}$$

$$\sum_{j=1}^{N_{2,2}} t_{2,2,j} = t_{2,2} = 2639 \text{ s}$$

(D) The duration of each of the two complete regeneration events within the shift-day are:

$t_{12,1} = 8440$ s

$t_{12,2} = 3920$ s

(E) The *RF* for this shift-day is:

$$RF = \frac{\frac{2769+2639}{2}}{\frac{5424+6676+3079}{3} + \frac{8440+3920}{2}} = 0.2406$$

(F) For this example, consider a candidate NTE event where there are two periods of regeneration active operation (state 2).

$t_{2,NTE,1} = 37$ s

$t_{2,NTE,2} = 40$ s

(G) The minimum averaging period for this candidate NTE event is:

$$t_{NTE,min} = \frac{37+40}{0.2406}$$

$t_{NTE,min} = 320.0$ s

* * * * *

Subpart T—[Amended]

■ 3. Section 86.1901 is amended by revising paragraph (a) to read as follows:

§ 86.1901 What testing requirements apply to my engines that have gone into service?

(a) If you manufacture diesel heavy-duty engines above 8,500 lbs. GVWR that are subject to engine-based exhaust emission standards under this part, you must test them as described in this subpart. You must measure all emissions listed in § 86.1910(d) other than PM beginning in calendar year 2005 and you must measure PM emissions beginning in calendar year 2007. *See* § 86.1930 for special provisions that may apply to manufacturers in the early years of this program.

* * * * *

■ 4. Section 86.1905 is amended by revising paragraph (c)(2) to read as follows:

§ 86.1905 How does this program work?

* * * * *

(c) * * *

(2) 2011 for PM testing.

* * * * *

■ 5. Section 86.1910 is amended by revising paragraph (g) to read as follows:

§ 86.1910 How must I prepare and test my in-use engines?

* * * * *

(g) Once an engine is set up for testing, test the engine for at least one shift-day. To complete a shift-day's

worth of testing, start sampling at the beginning of a shift and continue sampling for the whole shift, subject to the calibration requirements of the portable emissions measurement systems. A shift-day is the period of a normal workday for an individual employee. If the first shift-day of testing does not involve at least 3 hours of accumulated non-idle operation, repeat the testing for a second shift-day and report the results from both days of testing. If the second shift-day of testing also does not result in at least 3 hours of accumulated non-idle operation, you may choose whether or not to continue testing with that vehicle. If after two shift-days you discontinue testing before accumulating 3 hours of non-idle operation on either day, evaluate the valid NTE samples from both days of testing as described in § 86.1912 and include the data in the reporting and record keeping requirements specified in §§ 86.1920 and 1925. Count the engine toward meeting your testing requirements under this subpart and use the data for deciding whether additional engines must be tested under the applicable Phase 1 or Phase 2 test plan.

* * * * *

■ 6. Section 86.1912 is amended by revising paragraphs (a)(4)(xiii) and (a)(5)(iv) to read as follows:

§ 86.1912 How do I determine whether an engine meets the vehicle-pass criteria?

* * * * *

(a) * * *

(4) * * *

(xiii) PM: 0.006 grams per brake horsepower-hour.

(5) * * *

(iv) PM: 0.006 grams per brake horsepower-hour.

* * * * *

■ 7. Section 86.1920 is amended by revising paragraph (b)(4)(xii)(E) to read as follows:

§ 86.1920 What in-use testing information must I report to EPA?

* * * * *

(b) * * *

(4) * * *

(xii) * * *

(E) Emissions of THC, NMHC, CO, CO_2 or O_2, and NO_X (as appropriate). Report results for PM if it was measured in a manner that provides one-hertz test data. Report results for CH_4 if it was measured and used to determine NMHC.

* * * * *

■ 8. Section 86.1930 is amended as follows:

■ a. By revising the section heading.

■ b. By redesignating paragraph (b) as paragraph (c).

■ c. By revising paragraph (a).

■ d. By adding a new paragraph (b).

■ e. By revising the newly redesignated paragraph (c)(1)(iii).

§ 86.1930 What special provisions apply from 2005 through 2010?

(a) We may direct you to test engines under this subpart for emissions other than PM in 2005 and 2006, and for PM emissions in 2007 through 2010. In those interim periods, all the provisions of this subpart apply, except as specified in this paragraph (a). You may apply the exceptions identified in this section for both years of the applicable years for emissions other than PM. You may omit testing and reporting in two of the four applicable years for PM emissions.

(1) We will select engine families for testing of emissions other than PM only when the manufacturer's Statement of Compliance specifically describes the family as being designed to comply with NTE requirements.

(2) We will not direct you to do the Phase 2 testing in § 86.1915(c), regardless of measured emission levels.

(3) For purposes of calculating the NTE thresholds under § 86.1912(a) for any 2006 and earlier model year engine that is not subject to the emission standards in § 86.007–11, determine the applicable NTE standards as follows:

(i) If any numerical NTE requirements specified in the terms of any consent decree apply to the engine family, use those values as the NTE standards for testing under this subpart.

(ii) If a numerical NTE requirement is not specified in a consent decree for the engine family, the NTE standards are 1.25 times the applicable FELs or the applicable emission standards specified in § 86.004–11(a)(1) or § 86.098–11(a)(1).

(4) In the report required in § 86.1920(b), you must submit the deficiencies and limited testing region reports (see §§ 86.007–11(a)(4)(iv) and 86.1370–2007(b)(6) and (7)) for 2006 and earlier model year engines tested under this section.

(5) You must notify the Designated Compliance Officer by September 30, 2010 whether or not you will submit test reports for PM emissions for each of the four years from 2007 through 2010. See 40 CFR 1068.30 for the contact information for the Designated Compliance Officer.

(6) You must submit reports by the deadlines specified in paragraph (b) of this section.

(b) The following deadlines apply for reporting test results under this subpart:

(1) You must complete all the required testing and reporting under this subpart related to emissions other than PM by the following dates:

(i) November 30, 2007 for engine families that we designate for testing in 2005.

(ii) November 30, 2008 for engine families that we designate for testing in 2006.

(iii) November 30, 2009 for engine families that we designate for testing in 2007.

(iv) March 31, 2010 for engine families we designate for testing in 2008.

(v) April 30, 2011 for engine families we designate for testing in 2009.

(2) You must complete all the required testing and reporting under this subpart related to PM emissions by the following dates:

(i) May 31, 2010 for engine families that we designate for testing in 2007.

(ii) September 30, 2010 for engine families we designate for testing in 2008.

(iii) April 30, 2011 for engine families we designate for testing in 2009.

(iv) November 30, 2011 for engine families we designate for testing in 2009.

(c) * * *

(1) * * *

(iii) April 30, 2011 for engine families that we designate for non-PM testing in 2009.

* * * * *

§ 86.1935—[Removed]

■ 9. Section 86.1935 is removed.

PART 1033—CONTROL OF EMISSIONS FROM LOCOMOTIVES

■ 10. The authority citation for part 1033 continues to read as follows:

Authority: 42 U.S.C. 7401–7671q.

Subpart B—[Amended]

■ 11. Section 1033.150 is amended by revising paragraph (e)(1) to read as follows:

§ 1033.150 Interim provisions.

* * * * *

(e) * * *

(1) All of the engines on the switch locomotive must be covered by a certificate of conformity issued under 40 CFR part 89 or 1039 for model year 2008 or later (or earlier model years if the same standards applied as in 2008). Engines over 750 hp certified to the Tier 4 standards for non-generator set engines are not eligible for this allowance after 2014.

* * * * *

PART 1039—CONTROL OF EMISSIONS FROM NEW AND IN-USE NONROAD COMPRESSION-IGNITION ENGINES

■ 12. The authority citation for part 1039 continues to read as follows:

Authority: 42 U.S.C. 7401–7671q.

Subpart B—[Amended]

■ 13. Section 1039.102 is amended by revising paragraph (e) to read as follows:

§ 1039.102 What exhaust emission standards and phase-in allowances apply for my engines in model year 2014 and earlier?

* * * * *

(e) *Alternate NO_X standards.* For engines in 56–560 kW power categories during the phase-in of Tier 4 standards, you may certify engine families to the alternate NO_X or NO_X + NMHC standards in this paragraph (e) instead of the phase-in and phase-out NO_X and NO_X + NMHC standards described in Tables 4 through 6 of this section. Engines certified to an alternate NO_X standard under this section must be certified to an NMHC standard of 0.19 g/kW-hr. Do not include engine families certified under this paragraph (e) in determining whether you comply with the percentage phase-in requirements of paragraphs (c) and (d)(2) of this section. Except for the provisions for alternate FEL caps in § 1039.104(g), the NO_X and NO_X + NMHC standards and FEL caps under this paragraph (e) are as follows:

(1) For engines in the 56–130 kW power category, apply the following alternate NO_X standards and FEL caps:

(i) If you use the provisions of paragraph (d)(1) of this section, your alternate NO_X standard for any engine family in the 56–130 kW power category is 2.3 g/kW-hr for model years 2012 and 2013. Engines certified to this standard may not exceed a NO_X FEL cap of 3.0 g/kW-hr.

(ii) If you use the provisions of paragraph (d)(2) of this section, your alternate NO_X standard for any engine family in the 56–130 kW power category is 3.4 g/kW-hr for model years 2012 through 2014. Engines below 75 kW certified to this standard may not exceed a NO_X FEL cap of 4.4 g/kW-hr; engines at or above 75 kW certified to this standard may not exceed a NO_X FEL cap of 3.8 g/kW-hr.

(iii) If you do not use the provisions of paragraph (d) of this section, you may apply the alternate NO_X standard and the appropriate FEL cap from either paragraph (e)(1)(i) or (ii) of this section.

(2) For engines in the 130–560 kW power category, the alternate NO_X standard is 2.0 g/kW-hr for model years 2011 through 2013. Engines certified to this standard may not exceed a NO_X FEL cap of 2.7 g/kW-hr.

(3) You use NO_X + NMHC emission credits to certify an engine family to the alternate NO_X + NMHC standards in this paragraph (e)(3) instead of the otherwise applicable alternate NO_X and NMHC standards. Calculate the alternate NO_X + NMHC standard by adding 0.1 g/kW-hr to the numerical value of the applicable alternate NO_X standard of paragraph (e)(1) or (2) of this section. Engines certified to the NO_X + NMHC standards of this paragraph (e)(3) may not generate emission credits. The FEL caps for engine families certified under this paragraph (e)(3) are the previously applicable NO_X + NMHC standards of 40 CFR 89.112 (generally the Tier 3 standards).

* * * * *

■ 14. Section 1039.104 is amended by adding paragraph (g)(5) to read as follows:

§ 1039.104 Are there interim provisions that apply only for a limited time?

* * * * *

(g) * * *

(5) You may certify engines under this paragraph (g) without regard to whether or not the engine family's FEL is at or below the otherwise applicable FEL cap. For example, a 200 kW engine certified to the NO_X + NMHC standard of § 1039.102(e)(3) with an FEL equal to the FEL cap of 2.8 g/kW-hr may be certified under this paragraph (g) and count toward the sales limit specified in paragraph (g)(1) of this section.

* * * * *

Subpart G—[Amended]

■ 15. Section 1039.625 is amended by adding paragraph (b)(2)(iii) read as follows:

§ 1039.625 What requirements apply under the program for equipment-manufacturer flexibility?

* * * * *

(b) * * *

(2) * * *

(iii) In each power category at or above 56 kW, you may apply the provisions of paragraph (b)(2)(i) of this section in the first two model years for which Tier 4 standards apply, regardless of the number of engine families you use in your equipment, provided you exceed the single engine family restriction of that paragraph primarily due to production of equipment intended specifically to travel on snow and to commonly operate at more than 9,000 feet above sea level. After the first two Tier 4 model years in a power category, you may continue to apply the provisions of paragraph (b)(2)(i) of this section, subject to the single engine family restriction.

* * * * *

PART 1042—CONTROL OF EMISSIONS FROM NEW AND IN-USE MARINE COMPRESSION-IGNITION ENGINES AND VESSELS

■ 16. The authority citation for part 1042 continues to read as follows:

Authority: 42 U.S.C. 7401–7671q.

Subpart J—[Amended]

■ 17. Appendix II to part 1042 is amended by revising paragraph (c)(2) to read as follows:

Appendix II to Part 1042—Steady-State Duty Cycles

* * * * *

(c) * * *

(2) The following duty cycle applies for ramped-modal testing:

RMC mode	Time in mode (seconds)	Engine speed	Torque (percent)[1] [2]
1a Steady-state	229	Engine Governed	100.
1b Transition	20	Engine Governed	Linear transition.
2a Steady-state	166	Engine Governed	25.
2b Transition	20	Engine Governed	Linear transition.
3a Steady-state	570	Engine Governed	75.
3b Transition	20	Engine Governed	Linear transition.
4a Steady-state	175	Engine Governed	50.

[1] The percent torque is relative to the maximum test torque as defined in 40 CFR part 1065.

[2] Advance from one mode to the next within a 20-second transition phase. During the transition phase, command a linear progression from the torque setting of the current mode to the torque setting of the next mode.

PART 1045—CONTROL OF EMISSIONS FROM SPARK-IGNITION PROPULSION MARINE ENGINES AND VESSELS

■ 18. The authority citation for part 1045 continues to read as follows:

Authority: 42 U.S.C. 7401–7671q.

Subpart B—[Amended]

■ 19. Section 1045.145 is amended by revising paragraph (a) introductory text to read as follows:

§ 1045.145 Are there interim provisions that apply only for a limited time?

* * * * *

(a) *Small-volume engine manufacturers.* Special provisions apply to you for sterndrive/inboard engines if you are a small-volume engine manufacturer subject to the requirements of this part. You may delay complying with emission standards and other requirements that would otherwise apply until the 2011 model year for conventional sterndrive/inboard engines and until the 2013 model year for high-performance engines. For an engine to be exempt under this paragraph (a), you must contact us before January 1, 2011 or before you introduce such engines into U.S. commerce, whichever comes first. Add a permanent label to a readily visible part of each engine exempted under this paragraph (a). This label must include at least the following items:

* * * * *

PART 1054—CONTROL OF EMISSIONS FROM NEW, SMALL NONROAD SPARK-IGNITION ENGINES AND EQUIPMENT

■ 20. The authority citation for part 1054 continues to read as follows:

Authority: 42 U.S.C. 7401–7671q.

Subpart B—[Amended]

■ 21. Section 1054.101 is amended by revising paragraph (e) to read as follows:

§ 1054.101 What emission standards and requirements must my engines meet?

* * * * *

(e) *Relationship between handheld and nonhandheld engines.* Any engines certified to the nonhandheld emission standards in § 1054.105 may be used in either handheld or nonhandheld equipment. Engines above 80 cc certified to the handheld emission standards in § 1054.103 may not be used in nonhandheld equipment. 40 CFR 1068.101 prohibits the introduction into commerce or importation of such nonhandheld equipment except as specified in this paragraph (e). For purposes of the requirements of this part, engines at or below 80 cc are considered handheld engines, but may be installed in either handheld or nonhandheld equipment. These engines are subject to handheld exhaust emission standards; the equipment in which they are installed are subject to handheld evaporative emission standards starting with the model years specified in this part 1054. *See* § 1054.701(c) for special provisions related to emission credits for engine families with displacement at or below 80 cc where those engines are installed in nonhandheld equipment.

* * * * *

PART 1065—ENGINE-TESTING PROCEDURES

■ 22. The authority citation for part 1065 continues to read as follows:

Authority: 42 U.S.C. 7401–7671q.

Subpart B—[Amended]

■ 23. Section 1065.140 is amended by revising paragraphs (d) introductory text and (d)(1) to read as follows:

§ 1065.140 Dilution for gaseous and PM constituents.

* * * * *

(d) *Partial-flow dilution (PFD).* You may dilute a partial flow of raw or previously diluted exhaust before measuring emissions. Section 1065.240 describes PFD-related flow measurement instruments. PFD may consist of constant or varying dilution ratios as described in paragraphs (d)(2) and (3) of this section. An example of a constant dilution ratio PFD is a "secondary dilution PM" measurement system.

(1) *Applicability.* (i) You may use PFD to extract a proportional raw exhaust sample for any batch or continuous PM emission sampling over any transient duty cycle, any steady-state duty cycle, or any ramped-modal cycle.

(ii) You may use PFD to extract a proportional raw exhaust sample for any batch or continuous gaseous emission sampling over any transient duty cycle, any steady-state duty cycle, or any ramped-modal cycle.

(iii) You may use PFD to extract a proportional raw exhaust sample for any batch or continuous field-testing.

(iv) You may use PFD to extract a proportional diluted exhaust sample from a CVS for any batch or continuous emission sampling.

(v) You may use PFD to extract a constant raw or diluted exhaust sample for any continuous emission sampling.

(vi) You may use PFD to extract a constant raw or diluted exhaust sample for any steady-state emission sampling.

* * * * *

■ 24. Section 1065.260 is amended by revising paragraph (e) to read as follows:

§ 1065.260 Flame-ionization detector.

* * * * *

(e) *Methane.* FID analyzers measure total hydrocarbons (THC). To determine nonmethane hydrocarbons (NMHC), quantify methane, CH_4, either with a nonmethane cutter and a FID analyzer as described in § 1065.265, or with a gas chromatograph as described in § 1065.267. Instead of measuring methane, you may assume that 2% of measured total hydrocarbon is methane, as described in § 1065.650(c)(1)(vi). For a FID analyzer used to determine NMHC, determine its response factor to methane, RF_{CH4}, as described in § 1065.360. Note that NMHC-related calculations are described in § 1065.660.

■ 25. Section 1065.290 is amended by revising paragraph (b) to read as follows:

§ 1065.290 PM gravimetric balance.

* * * * *

(b) *Component requirements.* We recommend that you use a balance that meets the specifications in Table 1 of § 1065.205. Note that your balance-based system must meet the linearity verification in § 1065.307. If the balance uses internal calibration weights for routine spanning and the weights do not meet the specifications in § 1065.790, the weights must be verified independently with external calibration weights meeting the requirements of § 1065.790. While you may also use an inertial balance to measure PM, as described in § 1065.295, use a reference procedure based on a gravimetric balance for comparison with any proposed alternate measurement procedure under § 1065.10.

* * * * *

■ 26. Section 1065.295 is amended by adding paragraphs (c) and (d) to read as follows:

§ 1065.295 PM inertial balance for field-testing analysis.

* * * * *

(c) *Loss correction.* You may use PM loss corrections to account for PM loss in the inertial balance, including the sample handling system.

(d) *Deposition.* You may use electrostatic deposition to collect PM as long as its collection efficiency is at least 95%.

■ 27. Section 1065.307 is amended by adding paragraph (d)(9) to read as follows:

§ 1065.307 Linearity verification.

* * * * *

(d) * * *

(9) *Mass.* For linearity verification for gravimetric PM balances, use external calibration weights that that meet the requirements in § 1065.790.

* * * * *

■ 28. Section 1065.340 is amended by revising paragraph (e)(8) to read as follows:

§ 1065.340 Diluted exhaust flow (CVS) calibration.

* * * * *

(e) * * *

(8) Repeat the steps in paragraphs (e)(6) and (7) of this section to record data at a minimum of six restrictor positions ranging from the wide open restrictor position to the minimum expected pressure at the PDP inlet.

* * * * *

■ 29. Section 1065.390 is amended by revising paragraph (c)(2) to read as follows:

§ 1065.390 PM balance verifications and weighing process verification.

* * * * *

(c) * * *

(2) You may use an automated procedure to verify balance performance. For example many balances have internal calibration weights that are used automatically to verify balance performance.

* * * * *

■ 30. Section 1065.525 is amended by revising the section heading and paragraphs (c)(3) and (d) and removing paragraph (e) to read as follows:

§ 1065.525 Engine starting, restarting, and shutdown.

* * * * *

(c) * * *

(3) Void the entire test if the engine stalls at any time after emission sampling begins, except as described in § 1065.526. If you do not void the entire test, you must void the individual test mode or test interval in which the engine stalls.

* * * * *

(d) Shut down the engine according to the manufacturer's specifications.

■ 31. A new § 1065.526 is added to read as follows:

§ 1065.526 Repeating void modes or test intervals.

(a) Test modes and test intervals can be voided because of instrument malfunctions, engine stalling, or emissions exceeding instrument ranges. This section specifies circumstances for which a test mode or test interval can be repeated without repeating the entire test.

(b) This section is intended to result in replicate test modes and test intervals that are identical to what would have occurred if the cause of the voiding had not occurred. It does not allow you to repeat test modes or test intervals in any circumstances that would be inconsistent with good engineering judgment. For example, the procedures specified here for repeating a mode or interval may not apply for certain engines that include hybrid energy storage features or emission controls that involve physical or chemical storage of pollutants. This section applies for circumstances in which emission concentrations exceed the analyzer range only if it is due to operator error or analyzer malfunction. It does not apply for circumstances in which the emission concentrations exceed the range because they were higher than expected.

(c) If one of the modes of a discrete-mode test is voided as provided in this section, you may void the results for that individual mode and continue the test as follows:

(1) If the engine has stalled or been shut down, restart the engine.

(2) Use good engineering judgment to restart the test sequence using the appropriate steps in § 1065.530(b).

(3) Precondition the engine by operating it at the previous mode for approximately the same amount of time it operated at that mode for the previous emission measurement.

(4) Advance to the mode at which the test was interrupted and continue with the duty cycle as specified in the standard-setting part.

(d) If a transient or ramped-modal cycle test interval is voided as provided in this section, you may repeat the test interval as follows:

(1) Use good engineering judgment to restart (as applicable) and precondition the engine and emission sampling system to the same condition as would apply for normal testing. This may require you to complete the voided test interval. For example, you may generally repeat a hot-start test of a heavy-duty highway engine after completing the voided hot-start test and allowing the engine to soak for 20 minutes.

(2) Complete the remainder of the test according to the provisions in this subpart.

(e) Keep records from the voided test mode or test interval in the same manner as required for unvoided tests, and include a description of the reason for voiding the test mode or test interval.

■ 32. Section 1065.550 is amended by revising paragraphs (b)(1)(ii), (b)(2), and (b)(4) to read as follows:

§ 1065.550 Gas analyzer range validation, drift validation, and drift correction.

* * * * *

(b) * * *

(1) * * *

(ii) For the entire duty cycle and for each measured exhaust constituent, the difference between the uncorrected and corrected composite brake-specific emission values over the entire duty cycle is within ±4% of the uncorrected value or the applicable emission standard, whichever is greater. Note that for purposes of drift validation using composite brake-specific emission values over the entire duty cycle, leave unaltered any negative emission results over a given test interval (*i.e.,* do not set them to zero). A third calculation of composite brake-specific emission values is required for final reporting. This calculation uses drift-corrected mass (or mass rate) values from each test interval and sets any negative mass (or mass rate) values to zero before calculating the composite brake-specific emission values over the entire duty cycle. This requirement also applies for CO_2, whether or not an emission standard applies for CO_2. Where no emission standard applies for CO_2, the difference must be within ±4% of the uncorrected value. *See* paragraph (b)(4) of this section for exhaust constituents other than CO_2 for which no emission standard applies.

(2) For standards consisting of combined, individual measurements of exhaust constituents (such as NO_X + NMHC or separate NO and NO_2 measurements to comply with a NO_X standard), the duty cycle shall be validated for drift if you satisfy one of the following:

(i) For each test interval of the duty cycle and for each individually measured exhaust constituent (*e.g.* NO, NO_2, NO_X, or NMHC), the difference between the uncorrected and the corrected brake-specific emission values over the test interval is within ±4% of the uncorrected value; or

(ii) For each test interval of the duty cycle or for the entire duty cycle the difference between the combined (*e.g.* NO_X + NMHC) uncorrected and combined (*e.g.* NO_X + NMHC) corrected composite brake-specific emissions values over each test interval of the duty cycle or the entire duty cycle is within ±4% of the uncorrected value or the applicable emissions standard, whichever is greater.

* * * * *

(4) The provisions of this paragraph (b)(4) apply for measurement of pollutants other than CO_2 for which no emission standard applies (for purposes of this provision, standards consisting of combined, individual measurements are considered to be standards for each individual pollutant). You may use measurements that do not meet the drift validation criteria specified in paragraph (b)(1). For example, this allowance may be appropriate for measuring and reporting very low concentrations of CH_4 and N_2O as long as no emission standard applies for these compounds.

■ 33. Section 1065.640 is amended by revising paragraph (c)(5) to read as follows:

§ 1065.640 Flow meter calibration calculations.

* * * * *

(c) * * *

(5) The following example illustrates the use of the governing equations to calculate the discharge coefficient, C_d, of an SSV flow meter at one reference flow meter value. Note that calculating C_d for a CFV flow meter would be similar, except that C_f would be determined from Table 2 of this section or calculated iteratively using values of β and γ as described in paragraph (c)(2) of this section.

Example:

$\dot{n}_{ref}$= 57.625 mol/s

Z = 1

M_{mix} = 28.7805 g/mol = 0.0287805 kg/mol

R = 8.314472 J/(mol·K)

T_{in} = 298.15 K

A_t = 0.01824 m²

p_{in} = 99132.0 Pa

γ = 1.399

β = 0.8

Δp = 2.312 kPa

$$r_{SSV} = 1 - \frac{2.312}{99.132} = 0.977$$

$$C_f = \left[\frac{2 \cdot 1.399 \cdot \left(0.977^{\frac{1.399-1}{1.399}} - 1 \right)}{(1.399-1) \cdot \left(0.8^4 - 0.977^{\frac{-2}{1.399}} \right)} \right]^{\frac{1}{2}}$$

C_f = 0.274

$$C_d = 57.625 \cdot \frac{\sqrt{1 \cdot 0.0287805 \cdot 8.314472 \cdot 298.15}}{0.274 \cdot 0.01824 \cdot 99132.0}$$

C_d = 0.982

* * * * *

■ 34. Section 1065.642 is amended by revising paragraph (c) to read as follows:

§ 1065.642 SSV, CFV, and PDP molar flow rate calculations.

* * * * *

(c) *CFV molar flow rate.* Some CFV flow meters consist of a single venturi and some consist of multiple venturis, where different combinations of venturis are used to meter different flow rates. If you use multiple venturis and you calibrated each venturi independently to determine a separate discharge coefficient, C_d, for each venturi, calculate the individual molar flow rates through each venturi and sum all their flow rates to determine $\dot{n}$. If you use multiple venturis and you calibrated each combination of venturis, calculate $\dot{n}$ as using the sum of the active venturi throat areas as A_t, the square root of the sum of the squares of the active venturi throat diameters as d_t, and the ratio of the venturi throat to inlet diameters as the ratio of the square root of the sum of the active venturi throat diameters, d_t, to the diameter of the common entrance to all of the venturis, D. To calculate the molar flow rate through one venturi or one combination of venturis, use its respective mean C_d and other constants you determined according to § 1065.640 and calculate its molar flow rate $\dot{n}$ during an emission test, as follows:

$$\dot{n} = C_d \cdot C_f \cdot \frac{A_t \cdot p_{in}}{\sqrt{Z \cdot M_{mix} \cdot R \cdot T_{in}}} \qquad \text{Eq. 1065.642-4}$$

Example:

C_d = 0.985

C_f = 0.7219

A_t = 0.00456 m²

p_{in} = 98836 Pa

Z = 1

M_{mix} = 28.7805 g/mol = 0.0287805 kg/mol

R = 8.314472 J/(mol·K)

T_{in} = 378.15 K

$$\dot{n} = 0.985 \cdot 0.7219 \cdot \frac{0.00456 \cdot 98836}{\sqrt{1 \cdot 0.0287805 \cdot 8.314472 \cdot 378.15}}$$

$\dot{n}$ = 33.690 mol/s

■ 35. Section 1065.660 is amended by revising the section heading and paragraph (b)(2) to read as follows:

§ 1065.660 THC, NMHC, and CH_4 determination.

* * * * *

(b) * * *

(2) For nonmethane cutters, calculate x_{NMHC} using the nonmethane cutter's penetration fractions (*PF*) of CH_4 and C_2H_6 from § 1065.365, and using the HC contamination and dry-to-wet corrected THC concentration $x_{THC[THC-FID]cor}$ as determined in paragraph (a) of this section.

(i) Use the following equation for penetration fractions determined using an NMC configuration as outlined in § 1065.365(d):

$$x_{NMHC} = \frac{x_{THC[THC\text{-}FID]cor} - x_{THC[NMC\text{-}FID]cor} \cdot RF_{CH4[THC\text{-}FID]}}{1 - RFPF_{C2H6[NMC\text{-}FID]} \cdot RF_{CH4[THC\text{-}FID]}} \quad \text{Eq. 1065.660-2}$$

Where:

x_{NMHC} = concentration of NMHC.

$x_{THC[THC-FID]cor}$ = concentration of THC, HC contamination and dry-to-wet corrected, as measured by the THC FID during sampling while bypassing the NMC.

$x_{THC[NMC-FID]cor}$ = concentration of THC, HC contamination (optional) and dry-to-wet corrected, as measured by the NMC FID during sampling through the NMC.

$RF_{CH4[THC-FID]}$ = response factor of THC FID to CH_4, according to § 1065.360(d).

$RFPF_{C2H6[NMC-FID]}$ = nonmethane cutter combined ethane response factor and penetration fraction, according to § 1065.365(d).

Example:

$x_{THC[THC-FID]cor}$ = 150.3 µmol/mol

$x_{THC[NMC-FID]cor}$ = 20.5 µmol/mol

$RFPF_{C2H6[NMC-FID]}$ = 0.019

$RF_{CH4[THC-FID]}$ = 1.05

$$x_{NMHC} = \frac{150.3 - 20.5 \cdot 1.05}{1 - 0.019 \cdot 1.05}$$

x_{NMHC} = 131.4 µmol/mol

(ii) For penetration fractions determined using an NMC configuration as outlined in section § 1065.365(e), use the following equation:

$$x_{NMHC} = \frac{x_{THC[THC\text{-}FID]cor} \cdot PF_{CH4[NMC\text{-}FID]} - x_{THC[NMC\text{-}FID]cor}}{PF_{CH4[NMC\text{-}FID]} - PF_{C2H6[NMC\text{-}FID]}} \quad \text{Eq. 1065.660-3}$$

Where:

x_{NMHC} = concentration of NMHC.

$x_{THC[THC-FID]cor}$ = concentration of THC, HC contamination and dry-to-wet corrected, as measured by the THC FID during sampling while bypassing the NMC.

$PF_{CH4[NMC-FID]}$ = nonmethane cutter CH_4 penetration fraction, according to § 1065.365(e).

$x_{THC[NMC-FID]cor}$ = concentration of THC, HC contamination (optional) and dry-to-wet corrected, as measured by the THC FID during sampling through the NMC.

$PF_{C2H6[NMC-FID]}$ = nonmethane cutter ethane penetration fraction, according to § 1065.365(e).

Example:

$x_{THC[THC-FID]cor}$ = 150.3 µmol/mol

$PF_{CH4[NMC-FID]}$ = 0.990

$x_{THC[NMC-FID]cor}$ = 20.5 µmol/mol

$PF_{C2H6[NMC-FID]}$ = 0.020

$$x_{NMHC} = \frac{150.3 \cdot 0.990 - 20.5}{0.990 - 0.020}$$

x_{NMHC} = 132.3 µmol/mol

(iii) For penetration fractions determined using an NMC configuration as outlined in section § 1065.365(f), use the following equation:

$$x_{NMHC} = \frac{x_{THC[THC\text{-}FID]cor} \cdot PF_{CH4[NMC\text{-}FID]} - x_{THC[NMC\text{-}FID]cor} \cdot RF_{CH4[THC\text{-}FID]}}{PF_{CH4[NMC\text{-}FID]} - RFPF_{C2H6[NMC\text{-}FID]} \cdot RF_{CH4[THC\text{-}FID]}} \quad \text{Eq. 1065.660-4}$$

Where:

x_{NMHC} = concentration of NMHC.

$x_{THC[THC-FID]cor}$ = concentration of THC, HC contamination and dry-to-wet corrected, as measured by the THC FID during sampling while bypassing the NMC.

$PF_{CH4[NMC-FID]}$ = nonmethane cutter CH_4 penetration fraction, according to § 1065.365(f).

$x_{THC[NMC-FID]cor}$ = concentration of THC, HC contamination (optional) and dry-to-wet corrected, as measured by the THC FID during sampling through the NMC.

$RFPF_{C2H6[NMC-FID]}$ = nonmethane cutter CH_4 combined ethane response factor and penetration fraction, according to § 1065.365(f).

$RF_{CH4[THC-FID]}$ = response factor of THC FID to CH_4, according to § 1065.360(d).

Example:

$x_{THC[THC-FID]cor}$ = 150.3 µmol/mol

$PF_{CH4[NMC-FID]}$ = 0.990

$x_{THC[NMC-FID]cor}$ = 20.5 µmol/mol

$RFPF_{C2H6[NMC-FID]}$ = 0.019

$RF_{CH4[THC-FID]}$ = 0.980

$$x_{NMHC} = \frac{150.3 \cdot 0.990 - 20.5 \cdot 0.980}{0.990 - 0.019 \cdot 0.980}$$

x_{NMHC} = 132.5 µmol/mol

* * * * *

■ 36. Section 1065.750 is amended by revising paragraph (a)(3)(xi) to read as follows:

§ 1065.750 Analytical gases.

* * * * *

(a) * * *

(3) * * *

(xi) N_2O, balance purified synthetic air and/or N_2 (as applicable).

* * * * *

■ 37. Section 1065.905 is amended by revising paragraphs (c)(6), (d)(2), and Table 1 to read as follows:

§ 1065.905 General provisions.

* * * * *

(c) * * *

(6) What are the limits on ambient conditions for field testing? Note that the ambient condition limits in § 1065.520 do not apply for field testing. Field testing may occur at any ambient temperature, pressure, and humidity unless otherwise specified in the standard-setting part.

* * * * *

(d) * * *

(2) Use equipment specifications in § 1065.101 and in the sections from § 1065.140 to the end of subpart B of this part, with the exception of § 1065.140(e)(1) and (4), § 1065.170(c)(1)(vi), and § 1065.195(c). Section 1065.910 identifies additional equipment that is specific to field testing.

(i) For PM samples, configure dilution systems as follows:

(A) Use good engineering judgment to control diluent (i.e., dilution air) temperature. If you choose to directly and actively control diluent temperature, set the temperature to 25 °C.

(B) Control sample temperature to a (32 to 62) °C tolerance, as measured anywhere within 20 cm upstream or downstream of the PM storage media (such as a filter or oscillating crystal), where the tolerance applies only during sampling.

(C) Maintain filter face velocity to a (5 to 100) cm/s tolerance for flow-through media. Compliance with this provision can be verified by engineering analysis. This provision does not apply for non-flow-through media.

(ii) For inertial PM balances, there is no requirement to control the stabilization environment temperature or dewpoint.

* * * * *

TABLE 1 OF § 1065.905—SUMMARY OF TESTING REQUIREMENTS SPECIFIED OUTSIDE OF THIS SUBPART J

Subpart	Applicability for field testing [1]	Applicability for laboratory or similar testing with PEMS without restriction [1]	Applicability for laboratory or similar testing with PEMS with estrictions [1]
A: Applicability and general provisions.	Use all	Use all	Use all.
B: Equipment for testing	Use § 1065.101 and § 1065.140 through the end of subpart B, except § 1065.140(e)(1) and (4), § 1065.170(c)(1)(vi), and § 1065.195(c). § 1065.910 specifies equipment specific to field testing.	Use all	Use all. § 1065.910 specifies equipment specific to laboratory testing with PEMS.
C: Measurement instruments.	Use all. § 1065.915 allows deviations	Use all except § 1065.295(c).	Use all except § 1065.295(c). § 1065.915 allows deviations.
D: Calibrations and verifications.	Use all except § 1065.308 and § 1065.309. § 1065.920 allows deviations, but also has additional specifications.	Use all	Use all. § 1065.920 allows deviations, but also has additional specifications.
E: Test engine selection, maintenance, and durability.	Do not use. Use standard-setting part	Use all	Use all.
F: Running an emission test in the laboratory.	Use §§ 1065.590 and 1065.595 for PM § 1065.930 and § 1065.935 to start and run a field test.	Use all	Use all.
G: Calculations and data requirements.	Use all. § 1065.940 has additional calculation instructions.	Use all	Use all. § 1065.940 has additional calculation instructions.
H: Fuels, engine fluids, analytical gases, and other calibration materials.	Use all	Use all	Use all.
I: Testing with oxygenated fuels.	Use all	Use all	Use all.
K: Definitions and reference materials.	Use all	Use all	Use all.

[1] Refer to paragraphs (d) and (e) of this section for complete specifications.

■ 38. Section 1065.915 is amended by revising paragraphs (a), (d)(5) introductory text, and (d)(5)(iv), and adding paragraph (d)(5)(v), to read as follows:

§ 1065.915 PEMS instruments.

(a) *Instrument specifications.* We recommend that you use PEMS that meet the specifications of subpart C of this part. For unrestricted use of PEMS in a laboratory or similar environment, use a PEMS that meets the same specifications as each lab instrument it replaces. For field testing or for testing with PEMS in a laboratory or similar environment, under the provisions of § 1065.905(b), the specifications in the following table apply instead of the specifications in Table 1 of § 1065.205:

TABLE 1 OF § 1065.915—RECOMMENDED MINIMUM PEMS MEASUREMENT INSTRUMENT PERFORMANCE

Measurement	Measured quantity symbol	Rise time, t_{10-90}, and Fall time, t_{90-10}	Recording update frequency	Accuracy [1]	Repeatability [1]	Noise [1]
Engine speed transducer	f_n	1 s	1 Hz means	5.0% of pt. or 1.0% of max	2.0% of pt. or 1.0% of max.	0.5% of max.
Engine torque estimator, BSFC (This is a signal from an engine's ECM).	T or BSFC	1 s	1 Hz means	8.0% of pt. or 5% of max	2.0% of pt. or 1.0% of max.	1.0% of max.
General pressure transducer (not a part of another instrument).	p	5 s	1 Hz	5.0% of pt. or 5.0% of max	2.0% of pt. or 0.5% of max.	1.0% of max.
Atmospheric pressure meter	p_{atmos}	50 s	0.1 Hz	250 Pa	200 Pa	100 Pa.

TABLE 1 OF § 1065.915—RECOMMENDED MINIMUM PEMS MEASUREMENT INSTRUMENT PERFORMANCE—Continued

Measurement	Measured quantity symbol	Rise time, t_{10-90}, and Fall time, t_{90-10}	Recording update frequency	Accuracy [1]	Repeatability [1]	Noise [1]
General temperature sensor (not a part of another instrument).	T	5 s	1 Hz	1.0% of pt. K or 5 K	0.5% of pt. K or 2 K.	0.5% of max 0.5 K.
General dewpoint sensor	T_{dew}	50 s	0.1 Hz	3 K	1 K	1 K.
Exhaust flow meter	$\dot{n}$	1 s	1 Hz means	5.0% of pt. or 3.0% of max	2.0% of pt	2.0% of max.
Dilution air, inlet air, exhaust, and sample flow meters.	$\dot{n}$	1 s	1 Hz means	2.5% of pt. or 1.5% of max	1.25% of pt. or 0.75% of max.	1.0% of max.
Continuous gas analyzer	x	5 s	1 Hz	4.0% of pt. or 4.0% of meas.	2.0% of pt. or 2.0% of meas.	1.0% of max.
Gravimetric PM balance	m_{PM}	N/A	N/A	See § 1065.790	0.5 µg	N/A.
Inertial PM balance	m_{PM}	N/A	N/A	4.0% of pt. or 4.0% of meas.	2.0% of pt. or 2.0% of meas.	1.0% of max.

[1] Accuracy, repeatability, and noise are all determined with the same collected data, as described in § 1065.305, and based on absolute values. "pt." refers to the overall flow-weighted mean value expected at the standard; "max." refers to the peak value expected at the standard over any test interval, not the maximum of the instrument's range; "meas" refers to the actual flow-weighted mean measured over any test interval.

* * * * *

(d) * * *

(5) *ECM signals for determining brake-specific emissions.* You may use any combination of ECM signals, with or without other measurements, to estimate engine speed, torque, brake-specific fuel consumption (BSFC, in units of mass of fuel per kW-hr), and fuel rate for use in brake-specific emission calculations. We recommend that the overall performance of any speed, torque, or BSFC estimator should meet the performance specifications in Table 1 of this section. We recommend using one of the following methods:

* * * * *

(iv) *ECM fuel rate.* Use the fuel rate signal directly from the ECM and chemical balance to determine the molar flow rate of exhaust. Use § 1065.655(d) to determine the carbon mass fraction of fuel. You may alternatively develop and use your own combination of ECM signals to determine fuel mass flow rate.

(v) *Other ECM signals.* You may ask to use other ECM signals for determining brake-specific emissions, such as ECM air flow. We must approve the use of such signals in advance.

* * * * *

■ 39. Section 1065.920 is amended by revising the section heading and paragraph (a) to read as follows:

§ 1065.920 PEMS calibrations and verifications.

(a) *Subsystem calibrations and verifications.* Use all the applicable calibrations and verifications in subpart D of this part, including the linearity verifications in § 1065.307, to calibrate and verify PEMS. Note that a PEMS does not have to meet the system-response and updating-recording verifications of § 1065.308 and § 1065.309 if it meets the overall verification described in paragraph (b) of this section. This section does not apply to ECM signals.

* * * * *

■ 40. Section 1065.925 is amended by revising paragraph (h) introductory text to read as follows:

§ 1065.925 PEMS preparation for field testing.

* * * * *

(h) Verify the amount of contamination in the PEMS HC sampling system before the start of the field test as follows:

* * * * *

■ 41. Section 1065.940 is revised to read as follows:

§ 1065.940 Emission calculations.

(a) Perform emission calculations as described in § 1065.650 to calculate brake-specific emissions for each test interval using any applicable information and instructions in the standard-setting part.

(b) You may use a fixed molar mass for the diluted exhaust mixture for field testing. Determine this fixed value by engineering analysis.

[FR Doc. 2010–27892 Filed 11–5–10; 8:45 am]

BILLING CODE 6560–50–P

DEPARTMENT OF TRANSPORTATION

49 CFR Part 39

[Docket OST–2007–26829]

RIN 2105–AB87

Transportation for Individuals With Disabilities: Passenger Vessels

AGENCY: Department of Transportation, Office of the Secretary.

ACTION: Response to comments; stay of effective date.

SUMMARY: On July 6, 2010, the Department of Transportation issued a new Americans with Disabilities Act (ADA) final rule to ensure nondiscrimination on the basis of disability by passenger vessel operators (PVOs). The final rule requested comment on three issues: Service animals, mobility devices, and the consistency of the rule with recent Department of Justice ADA rules. This document responds to those comments and makes certain adjustments in effective dates for the final rule.

DATES: 49 CFR 39.39 is stayed effective from November 8, 2010 through January 3, 2012; the remainder of 49 CFR part 39 is stayed effective from November 8, 2010 through January 3, 2011.

FOR FURTHER INFORMATION CONTACT: Robert C. Ashby, Deputy Assistant General Counsel for Regulation and Enforcement, Department of Transportation, 1200 New Jersey Avenue, SE., Room W94–302, Washington, DC 20590. (202) 366–9310 (voice); (202) 366–7687 (TDD); *bob.ashby@dot.gov* (e-mail).

SUPPLEMENTARY INFORMATION: After a lengthy, open, and inclusive rulemaking process including an advance notice of proposed rulemaking (ANPRM), a notice of proposed rulemaking (NPRM), public meetings, and consultation with the Access Board and the Department of Justice (DOJ), the Department of Transportation issued a final rule (49 CFR part 39) applying the ADA to the policies and practices of passenger vessel operators (PVOs). The rule was issued on July 6, 2010 (75 FR 38878) with an effective date of November 3, 2010. The final rule included a request for comment on three issues: service animals, mobility aids, and the general consistency of Part 39 with recent DOJ rules under Titles II and III of the ADA. The Department worked closely with DOJ to ensure that part 39, as published, is fully consistent with DOJ ADA rules. The question raised in the request for comments was whether it would be appropriate for the Department to make changes to the rule that could differ from the DOJ rules in some respects.

The Department received over 30 comments. About two-thirds of these were from advocates of psychiatric service animals (PSAs). They supported considering such animals to be service animals and opposed permitting emotional service animals (ESAs) to be considered as service animals. Two disability organizations supported the use of ESAs on ships and urged the Department to permit them to travel with their users. The Department is not making any changes in its rules in response to these comments. Part 39's existing definition of service animals encompasses PSAs. The preamble to the final rule made clear that ESAs, consistent with DOJ rules, are not considered to be service animals that PVOs are required to accommodate, though the Department said that it is a good idea for PVOs to accept ESAs.

Two organizations representing PVOs commented on the rule. Both urged that the Department's rules be consistent with those of DOJ. DOT regards its existing rules as being consistent with those of DOJ, in general as well as with respect to particular matters such as service animals and mobility aids. The Department is not making any substantive changes to its rules, which consequently will remain consistent with those of DOJ.

One of these organizations pointed out that the DOJ ADA rules become effective in six months rather than four, and that a DOJ provision on hotel reservations had an 18-month effective date. It asked that DOT change its effective dates to be consistent with these DOJ dates. The Department believes that these requests are reasonable. Consequently, we are changing the effective date for most provisions of the rule from November 3, 2010, to January 3, 2011. In addition to being consistent with the DOJ time frame, this extension will permit more time for the Department to work on guidance and interpretations that will assist regulated parties and the public to implement the new rules smoothly. We will also extend the effective date for the cabin reservations section of the rule to January 3, 2012. In addition to being consistent with the DOJ time frame for hotel reservations, this extension will provide additional time for PVOs to make necessary changes to their computer systems to carry out the regulatory requirements.

Some commenters made comments outside the scope of the Department's request for comment. One of the PVO organizations expressed its disagreement with various provisions of the final rule and sought clarification of others. Other comments asked for clarifications on some issues, such as where complaints should be sent or coverage of coastwise vessels carrying passengers not for hire. We will not respond to those comments here, since they are beyond the scope of the Department's request for comments, but we would note that, in the normal course of business, the Department regularly provides interpretations of or guidance concerning new regulatory provisions. We will do so in the case of Part 39 where necessary and appropriate.

Regulatory Process Matters

This stay of effective dates relates to an underlying final rule that was significant for purposes of Executive Order 12886 and the Department's Regulatory Policies and Procedures. However, this notice makes no changes in the text of the final regulation, and the changes to the effective date of the rule are not themselves significant. These changes do not impose any additional costs or burdens on any regulated parties, and they provide regulated entities, including small entities, additional time to comply with the regulations. For this reason, the Department certifies that these changes to the effective dates do not impose significant economic effects on a substantial number of small entities.

Issued at Washington, DC, November 2, 2010.

Ray LaHood,

Secretary of Transportation.

[FR Doc. 2010–28236 Filed 11–5–10; 8:45 am]

BILLING CODE 4910–9X–P

DEPARTMENT OF COMMERCE

National Oceanic and Atmospheric Administration

50 CFR Part 229

[Docket No. 100216088–0454–02]

RIN 0648–AY69

List of Fisheries for 2011

AGENCY: National Marine Fisheries Service (NMFS), National Oceanic and Atmospheric Administration (NOAA), Commerce.

ACTION: Final rule.

SUMMARY: The National Marine Fisheries Service (NMFS) publishes its final List of Fisheries (LOF) for 2011, as required by the Marine Mammal Protection Act (MMPA). The final LOF for 2011 reflects new information on interactions between commercial fisheries and marine mammals. NMFS must classify each commercial fishery on the LOF into one of three categories under the MMPA based upon the level of serious injury and mortality of marine mammals that occurs incidental to each fishery. The classification of a fishery on the LOF determines whether participants in that fishery are subject to certain provisions of the MMPA, such as registration, observer coverage, and take reduction plan requirements.

DATES: This final rule is effective January 1, 2011.

ADDRESSES: *See* **SUPPLEMENTARY INFORMATION** for a listing of all Regional Offices. Comments regarding the burden-hour estimates, or any other aspect of the collection of information requirements contained in this final rule, should be submitted in writing to Chief, Marine Mammal and Sea Turtle Conservation Division, Office of Protected Resources, NMFS, 1315 East-West Highway, Silver Spring, MD 20910, or to Nathan Frey, OMB, by fax to 202–395–7285 or by e-mail to *Nathan_Frey@omb.eop.gov.*

FOR FURTHER INFORMATION CONTACT: Melissa Andersen, Office of Protected Resources, 301–713–2322; David Gouveia, Northeast Region, 978–281–9280; Laura Engleby, Southeast Region, 727–551–5791; Elizabeth Petras, Southwest Region, 562–980–3238; Brent Norberg, Northwest Region, 206–526–6733; Bridget Mansfield, Alaska Region, 907–586–7642; Lisa Van Atta, Pacific Islands Region, 808–944–2257. Individuals who use a telecommunications device for the hearing impaired may call the Federal Information Relay Service at 1–800–

877–8339 between 8 a.m. and 4 p.m. Eastern time, Monday through Friday, excluding Federal holidays.

SUPPLEMENTARY INFORMATION:

Availability of Published Materials

Information regarding the LOF and the Marine Mammal Authorization Program, including registration procedures and forms, current and past LOFs, information on each Category I and II fishery, observer requirements, and marine mammal injury/mortality reporting forms and submittal procedures, may be obtained at: *http://www.nmfs.noaa.gov/pr/interactions/lof/*, or from any NMFS Regional Office at the addresses listed below:

NMFS, Northeast Region, 55 Great Republic Drive, Gloucester, MA 01930–2298, Attn: Marcia Hobbs;

NMFS, Southeast Region, 263 13th Avenue South, St. Petersburg, FL 33701, Attn: Laura Engleby;

NMFS, Southwest Region, 501 W. Ocean Blvd., Suite 4200, Long Beach, CA 90802–4213, Attn: Charles Villafana;

NMFS, Northwest Region, 7600 Sand Point Way NE, Seattle, WA 98115, Attn: Protected Resources Division;

NMFS, Alaska Region, Protected Resources, P.O. Box 22668, 709 West 9th Street, Juneau, AK 99802, Attn: Bridget Mansfield; or

NMFS, Pacific Islands Region, Protected Resources, 1601 Kapiolani Boulevard, Suite 1100, Honolulu, HI 96814–4700, Attn: Lisa Van Atta.

What is the list of fisheries?

Section 118 of the MMPA requires NMFS to place all U.S. commercial fisheries into one of three categories based on the level of incidental serious injury and mortality of marine mammals occurring in each fishery (16 U.S.C. 1387(c)(1)). The classification of a fishery on the LOF determines whether participants in that fishery may be required to comply with certain provisions of the MMPA, such as registration, observer coverage, and take reduction plan requirements. NMFS must reexamine the LOF annually, considering new information in the Marine Mammal Stock Assessment Reports (SAR) and other relevant sources, and publish in the **Federal Register** any necessary changes to the LOF after notice and opportunity for public comment (16 U.S.C. 1387 (c)(1)(C)).

How does NMFS determine in which category a fishery is placed?

The definitions for the fishery classification criteria can be found in the implementing regulations for section 118 of the MMPA (50 CFR 229.2). The criteria are also summarized here.

Fishery Classification Criteria

The fishery classification criteria consist of a two-tiered, stock-specific approach that first addresses the total impact of all fisheries on each marine mammal stock, and then addresses the impact of individual fisheries on each stock. This approach is based on consideration of the rate, in numbers of animals per year, of incidental mortalities and serious injuries of marine mammals due to commercial fishing operations relative to the potential biological removal (PBR) level for each marine mammal stock. The MMPA (16 U.S.C. 1362 (20)) defines the PBR level as the maximum number of animals, not including natural mortalities, that may be removed from a marine mammal stock while allowing that stock to reach or maintain its optimum sustainable population. This definition can also be found in the implementing regulations for section 118 of the MMPA (50 CFR 229.2).

Tier 1: If the total annual mortality and serious injury of a marine mammal stock, across all fisheries, is less than or equal to 10 percent of the PBR level of the stock, all fisheries interacting with the stock would be placed in Category III (unless those fisheries interact with other stock(s) in which total annual mortality and serious injury is greater than 10 percent of PBR). Otherwise, these fisheries are subject to the next tier (Tier 2) of analysis to determine their classification.

Tier 2, Category I: Annual mortality and serious injury of a stock in a given fishery is greater than or equal to 50 percent of the PBR level (*i.e.,* frequent incidental mortality and serious injuries of marine mammals).

Tier 2, Category II: Annual mortality and serious injury of a stock in a given fishery is greater than 1 percent and less than 50 percent of the PBR level (*i.e.,* occasional incidental mortality and serious injuries of marine mammals).

Tier 2, Category III: Annual mortality and serious injury of a stock in a given fishery is less than or equal to 1 percent of the PBR level (*i.e.,* a remote likelihood or no known incidental mortality and serious injuries of marine mammals).

While Tier 1 considers the cumulative fishery mortality and serious injury for a particular stock, Tier 2 considers fishery-specific mortality and serious injury for a particular stock. Additional details regarding how the categories were determined are provided in the preamble to the final rule implementing section 118 of the MMPA (60 FR 45086, August 30, 1995).

Because fisheries are classified on a per-stock basis, a fishery may qualify as one Category for one marine mammal stock and another Category for a different marine mammal stock. A fishery is typically classified on the LOF at its highest level of classification (*e.g.,* a fishery qualifying for Category III for one marine mammal stock and for Category II for another marine mammal stock will be listed under Category II).

Other Criteria That May Be Considered

In the absence of reliable information indicating the frequency of incidental mortality and serious injury of marine mammals by a commercial fishery, NMFS will determine whether the incidental serious injury or mortality is "frequent," "occasional," or "remote" by evaluating other factors such as fishing techniques, gear used, methods used to deter marine mammals, target species, seasons and areas fished, qualitative data from logbooks or fisher reports, stranding data, and the species and distribution of marine mammals in the area, or at the discretion of the Assistant Administrator for Fisheries (50 CFR 229.2). Further, eligible commercial fisheries not specifically identified on the LOF are deemed to be Category II fisheries until the next LOF is published (50 CFR 229.2).

How does NMFS determine which species or stocks are included as incidentally killed or injured in a fishery?

The LOF includes a list of marine mammal species or stocks incidentally killed or injured in each commercial fishery. To determine which species or stocks are included as incidentally killed or injured in a fishery, NMFS annually reviews the information presented in the current SARs. The SARs are based upon the best available scientific information and provide the most current and inclusive information on each stock's PBR level and level of interaction with commercial fishing operations. NMFS also reviews other sources of new information, including observer data, stranding data, and fisher self-reports.

In the absence of reliable information on the level of mortality or injury of a marine mammal stock, or insufficient observer data, NMFS will determine whether a species or stock should be added to, or deleted from, the list by considering other factors such as: changes in gear used, increases or decreases in fishing effort, increases or decreases in the level of observer coverage, and/or changes in fishery

management that are expected to lead to decreases in interactions with a given marine mammal stock (such as a fishery management plan (FMP) or a take reduction plan (TRP)). NMFS will provide case-specific justification in the LOF for changes to the list of species or stocks incidentally killed or injured.

How does NMFS determine the levels of observer coverage in a fishery on the LOF?

Data obtained from the observer program and observer coverage levels are important tools in estimating the level of marine mammal mortality and serious injury in commercial fishing operations. The best available information on the level of observer coverage, and the spatial and temporal distribution of observed marine mammal interactions, is presented in the SARs. Starting with the 2005 SARs, each SAR includes an appendix with detailed descriptions of each Category I and II fishery on the LOF, including observer coverage in those fisheries. The SARs generally do not provide detailed information on observer coverage in Category III fisheries because, under the MMPA, Category III fisheries are not required to accommodate observers aboard vessels due to the remote likelihood of mortality and serious injury of marine mammals. Fishery information presented in the SARs' appendices includes: Level of observer coverage, target species, levels of fishing effort, spatial and temporal distribution of fishing effort, characteristics of fishing gear and operations, management and regulations, and interactions with marine mammals. Copies of the SARs are available on the NMFS Office of Protected Resources' Web site at: *http://www.nmfs.noaa.gov/pr/sars/*. Information on observer coverage levels in Category I and II fisheries can also be found in the Category I and II fishery summary documents on the NMFS Office of Protected Resources Web site: *http://www.nmfs.noaa.gov/pr/interactions/lof/*. Additional information on observer programs in commercial fisheries can be found on the NMFS National Observer Program's Web site: *http://www.st.nmfs.gov/st4/nop/*.

How do I find out if a specific fishery is in category I, II, or III?

This final rule includes three tables that list all U.S. commercial fisheries by LOF Category. Table 1 lists all of the commercial fisheries in the Pacific Ocean (including Alaska); Table 2 lists all of the commercial fisheries in the Atlantic Ocean, Gulf of Mexico, and Caribbean; and Table 3 lists all U.S.-authorized commercial fisheries on the high seas. A fourth table, Table 4, lists all commercial fisheries managed under applicable take reduction plans or teams.

Are high seas fisheries included on the LOF?

Beginning with the 2009 LOF, NMFS includes high seas fisheries in Table 3 of the LOF, along with the number of valid High Sea Fishing Compliance Act (HSFCA) permits in each fishery. As of 2004, NMFS issues HSFCA permits only for high seas fisheries analyzed in accordance with the National Environmental Policy Act (NEPA) and the Endangered Species Act (ESA). The authorized high seas fisheries are broad in scope and encompass multiple specific fisheries identified by gear type. For the purposes of the LOF, the high seas fisheries are subdivided based on gear type (*e.g.,* trawl, longline, purse seine, gillnet, troll, etc.) to provide more detail on composition of effort within these fisheries. Many fisheries operate in both U.S. waters and on the high seas, creating some overlap between the fisheries listed in Tables 1 and 2 and those in Table 3. In these cases, the high seas component of the fishery is not considered a separate fishery, but an extension of a fishery operating within U.S. waters (listed in Table 1 or 2). NMFS designates those fisheries in Tables 1, 2, and 3 by a "*" after the fishery's name. The number of HSFCA permits listed in Table 3 for the high seas components of these fisheries operating in U.S. waters does not necessarily represent additional effort that is not accounted for in Tables 1 and 2. Many vessels/participants holding HSFCA permits also fish within U.S. waters and are included in the number of vessels and participants operating within those fisheries in Tables 1 and 2.

HSFCA permits are valid for five years, during which time FMPs can change. Therefore, some vessels/participants may possess valid HSFCA permits without the ability to fish under the permit because it was issued for a gear type that is no longer authorized under the most current FMP. For this reason, the number of HSFCA permits displayed in Table 3 is likely higher than the actual U.S. fishing effort on the high seas. For more information on how NMFS classifies high seas fisheries on the LOF, see the preamble text in the final 2009 LOF (73 FR 73032; December 1, 2008).

Where can I find specific information on fisheries listed on the LOF?

NMFS developed summary documents for each Category I and II fishery on the LOF. These summaries provide the full history of each Category I and II fishery, including: When the fishery was added to the LOF, the basis for the fishery's initial classification, classification changes to the fishery, changes to the list of species or stocks incidentally killed or injured in the fishery, fishery gear and methods used, observer coverage levels, fishery management and regulation, and applicable take reduction plans or teams, if any. These summaries are updated after each final LOF. The summaries can be found under "How Do I Find Out if a Specific Fishery is in Category I, II, or III?" on the NMFS Office of Protected Resources' Web site: *http://www.nmfs.noaa.gov/pr/interactions/lof/*.

Am I required to register under the MMPA?

Owners of vessels or gear engaging in a Category I or II fishery are required under the MMPA (16 U.S.C. 1387(c)(2)), as described in 50 CFR 229.4, to register with NMFS and obtain a marine mammal authorization to lawfully take non-endangered and non-threatened marine mammals incidental to commercial fishing operations. Owners of vessels or gear engaged in a Category III fishery are not required to register with NMFS or obtain a marine mammal authorization.

How do I register?

NMFS has integrated the MMPA registration process, the Marine Mammal Authorization Program (MMAP), with existing state and Federal fishery license, registration, or permit systems for Category I and II fisheries on the LOF. Participants in these fisheries are automatically registered under the MMAP and are not required to submit registration or renewal materials directly under the MMAP. In the Pacific Islands, Southwest, Northwest, and Alaska regions, NMFS will issue vessel or gear owners an authorization certificate; in the Northeast and Southeast Regions, NMFS will issue vessel or gear owners notification of registry and directions on obtaining an authorization certificate. The authorization certificate, or a copy, must be on board the vessel while it is operating in a Category I or II fishery, or for non-vessel fisheries, in the possession of the person in charge of the fishing operation (50 CFR 229.4(e)). Although efforts are made to limit the issuance of authorization certificates to only those vessel or gear owners that participate in Category I or II fisheries, not all state and Federal permit systems distinguish between fisheries as

classified by the LOF. Therefore, some vessel or gear owners in Category III fisheries may receive authorization certificates even though they are not required for Category III fisheries. Individuals fishing in Category I and II fisheries for which no state or Federal permit is required must register with NMFS by contacting their appropriate Regional Office (*see* **ADDRESSES**).

How do I receive my authorization certificate and injury/mortality reporting forms?

All vessel or gear owners that participate in Pacific Islands, Southwest, Northwest, or Alaska regional fisheries will receive their authorization certificates and/or injury/mortality reporting forms via U.S. mail or with their State or Federal license at the time of renewal. Vessel or gear owners participating in the Northeast and Southeast Regional Integrated Registration Programs will receive their authorization certificates and/or injury/mortality reporting forms as follows:

1. Northeast Region vessel or gear owners participating in Category I or II fisheries for which a State or Federal permit is required may receive their authorization certificate and/or injury/mortality reporting form by contacting the Northeast Regional Office at 978–281–9328 or by visiting the Northeast Regional Office Web site (*http://www.nero.noaa.gov/prot_res/mmap/certificate.html*) and following the instructions for printing the necessary documents.

2. Southeast Region vessel or gear owners participating in Category I or II fisheries for which a Federal permit is required, as well as fisheries permitted by the states of North Carolina, South Carolina, Georgia, Florida, Alabama, Mississippi, Louisiana, and Texas will receive notice of registry and may receive their authorization certificate and/or injury/mortality reporting form by contacting the Southeast Regional Office at 727–551–5758 or by visiting the Southeast Regional Office Web site (*http://sero.nmfs.noaa.gov/pr/pr.htm*) and following the instructions for printing the necessary documents.

How do I renew my registration under the MMPA?

In Pacific Islands, Southwest, or Alaska regional fisheries, registrations of vessel or gear owners are automatically renewed and participants should receive an authorization certificate by January 1 of each new year. In Northwest regional fisheries, vessel or gear owners receive authorization with each renewed state fishing license, the timing of which varies based on target species. In Northeast regional fisheries, authorization certificates will be mailed directly to all applicable State and Federal permit holders who have registered their permits during the previous calendar year. Vessel or gear owners who participate in these regions and have not received authorization certificates by January 1 or with renewed fishing licenses must contact the appropriate NMFS Regional Office (*see* **ADDRESSES**).

In Southeast regional fisheries, vessel or gear owners may receive an authorization certificate by contacting the Southeast Regional Office or visiting the Southeast Regional Office Web site (*http://sero.nmfs.noaa.gov/pr/pr.htm*) and following the instructions for printing the necessary documents.

Am I required to submit reports when I injure or kill a marine mammal during the course of commercial fishing operations?

In accordance with the MMPA (16 U.S.C. 1387(e)) and 50 CFR 229.6, any vessel owner or operator, or gear owner or operator (in the case of non-vessel fisheries), participating in a fishery listed on the LOF must report to NMFS all incidental injuries and mortalities of marine mammals that occur during commercial fishing operations, regardless of the category in which the fishery is placed (I, II or III) within 48 hours of the end of the fishing trip. "Injury" is defined in 50 CFR 229.2 as a wound or other physical harm. In addition, any animal that ingests fishing gear or any animal that is released with fishing gear entangling, trailing, or perforating any part of the body is considered injured, regardless of the presence of any wound or other evidence of injury, and must be reported. Injury/mortality reporting forms and instructions for submitting forms to NMFS can be downloaded from: *http://www.nmfs.noaa.gov/pr/pdfs/interactions/mmap_reporting_form.pdf* or by contacting the appropriate Regional office (*see* **ADDRESSES**). Reporting requirements and procedures can be found in 50 CFR 229.6.

Am I required to take an observer aboard my vessel?

Individuals participating in a Category I or II fishery are required to accommodate an observer aboard their vessel(s) upon request from NMFS. MMPA section 118 states that an observer will not be placed on a vessel if the facilities for quartering an observer or performing observer functions are inadequate or unsafe; thereby, exempting vessels too small to accommodate an observer from this requirement. However, observer requirements will not be exempted, regardless of vessel size, for U.S. Atlantic Ocean, Caribbean, Gulf of Mexico large pelagics longline vessels operating in special areas designated by the Pelagic Longline Take Reduction Plan implementing regulations (50 CFR 229.36(d)). Observer requirements can be found in 50 CFR 229.7.

Am I required to comply with any take reduction plan regulations?

Table 4 in this final rule provides a list of fisheries affected by take reduction plans and teams. Take reduction plan regulations can be found at 50 CFR 229.30 through 229.36.

Sources of Information Reviewed for the Final 2011 LOF

NMFS reviewed the marine mammal incidental serious injury and mortality information presented in the SARs for all observed fisheries to determine whether changes in fishery classification were warranted. The SARs are based on the best scientific information available at the time of preparation, including the level of serious injury and mortality of marine mammals that occurs incidental to commercial fishery operations and the PBR levels of marine mammal stocks. The information contained in the SARs is reviewed by regional Scientific Review Groups (SRGs) representing Alaska, the Pacific (including Hawaii), and the U.S. Atlantic, Gulf of Mexico, and Caribbean. The SRGs were created by the MMPA to review the science that informs the SARs, and to advise NMFS on marine mammal population status, trends, and stock structure, uncertainties in the science, research needs, and other issues.

NMFS also reviewed other sources of new information, including marine mammal stranding data, observer program data, fisher self-reports, FMPs, and ESA documents.

The final LOF for 2011 was based, among other things, on information provided in the NEPA and ESA documents analyzing authorized high seas fisheries, the final SARs for 1996 (63 FR 60, January 2, 1998), 2001 (67 FR 10671, March 8, 2002), 2002 (68 FR 17920, April 14, 2003), 2003 (69 FR 54262, September 8, 2004), 2004 (70 FR 35397, June 20, 2005), 2005 (71 FR 26340, May 4, 2006), 2006 (72 FR 12774, March 19, 2007), 2007 (73 FR 21111, April 18, 2008), 2008 (74 FR 19530, April 29, 2009), 2009 (75 FR 12498, March 16, 2010), and the draft SARs for 2010 (75 FR 46912, August 4, 2010). The SARs are available at: *http://*

www.nmfs.noaa.gov/pr/sars/. State and regional abbreviations used in the following sections include: CA (California), FL (Florida), GA (Georgia), GMX (Gulf of Mexico), HI (Hawaii), NC (North Carolina), OR (Oregon), SC (South Carolina), VA (Virginia), WA (Washington), and WNA (Western North Atlantic).

Fishery Descriptions

Beginning with the final 2008 LOF (72 FR 66048, November 27, 2007), NMFS describes each Category I and II fishery on the LOF. Below, NMFS describes the fisheries classified as Category I or II on the 2011 LOF that were not classified as such on a previous LOF (and therefore have not yet been defined on the LOF). Additional details for Category I and II fisheries operating in U.S. waters are included in the SARs, FMPs, and TRPs, through state agencies, or through the fishery summary documents available on the NMFS Office of Protected Resources Web site (*http://www.nmfs.noaa.gov/pr/interactions/lof/.*) Additional details for Category I and II fisheries operating on the high seas are included in various FMPs, NEPA, or ESA documents.

WA Coastal Dungeness Crab Pot/Trap Fishery

Washington's coastal commercial crab grounds extend from the Columbia River estuary to Cape Flattery, including Grays Harbor and Willapa Bay. The coastal crab fishery is a limited entry fishery with 228 license holders, of which approximately 200 are active annually. Each coastal crab license is assigned a maximum pot limit of either 300 or 500 pots. Pots are fished individually and must be marked with an identification number. Surface marker buoys must also be tagged for identification. The fishery opens on or about December 1 when the majority of male crabs have recovered from the fall molt and shell condition has hardened. The season runs through September 15. In 1997 Congress granted Washington, Oregon and California jurisdiction to manage Dungeness Crab fisheries outside of state waters to the 200 mile limit of the U.S. EEZ. Under Washington state regulations, pots can be no larger than 13 cubic feet and must be equipped with specified escape rings for undersize crab and a biodegradable release mechanism to allow crabs to escape from pots that become separated from the buoy or have otherwise become lost. There is a summer FMP, which is part of the larger Washington Coastal Dungeness Crab FMP, in place to protect crabs that enter the molt prior to the September 15 season ending date. This summer FMP allows for in-season closures of the fishery if the percentage of early molting crab reaches a certain level.

Southeastern U.S. Atlantic, Gulf of Mexico Shrimp Trawl Fishery

The "Southeastern U.S. Atlantic, Gulf of Mexico shrimp trawl" fishery is a pelagic or bottom trawl fishery operating virtually year-round in the Atlantic Ocean from North Carolina through Florida, and in the Gulf of Mexico from Florida through Texas. Effort occurs in estuarine, near shore coastal waters, and along the continental slope of the Atlantic and estuarine, near shore coastal, and offshore continental shelf and slope waters in the Gulf of Mexico. The fishery targets brown, pink and white shrimp within estuaries, and near coastal and offshore regions; and targets Royal Red shrimp along the deep continental slope. Commercial shrimp vessels most commonly employ a double-rig otter trawl, which normally includes a lazy line attached to each bag's codend. The lazy line floats free during active trawling, and as the net is hauled back, it is retrieved with a boat- or grappling-hook to assist in guiding and emptying the trawl nets. Shrimp trawl soak time is about three hours; the fishery typically operates from sunset to sunrise when shrimp are most likely to swim higher in the water column. Although shrimp trawlers are required under ESA regulations to use turtle excluder devices to reduce sea turtle bycatch (50 CFR 223.206), the fishery currently does not use any method or gear modification to deter, or reduce bycatch of, marine mammals. 2009 data indicate there are approximately 4,950 shrimp trawl vessels operating in the Southeast Atlantic and Gulf of Mexico with an estimated 76,884 vessel trips.

Comments and Responses

NMFS received 9 comment letters on the proposed 2011 LOF (75 FR 36318, June 25, 2010). Comments were received from the California Wetfish Producers Association, Hawaii Longline Association, Marine Mammal Commission, Natural Resources Defense Council, Oregon Department of Fish and Wildlife, United States Department of Interior, Washington Department of Fish and Wildlife, Western Pacific Fishery Management Council, and one private individual. Comments on issues outside the scope of the LOF were noted, but are not responded to in this final rule.

General Comments

Comment 1: Since 2005, the Marine Mammal Commission (Commission) has recommended NMFS include observer coverage for each fishery on the LOF for use in evaluating the amount of confidence to place on reports of mortality or serious injury (or lack thereof) for marine mammals stocks. The Commission appreciated NMFS' efforts to provide additional information for Category I and II fisheries on the NMFS Web site. However, the Commission further recommended NMFS describe in the LOF the basis for confirming that a fishery warrants a Category III classification. The Commission also stated it would be useful to also have information on observer coverage in Category III fisheries to determine whether reliable information was collected to justify a Category III listing or if a fishery is Category III based on a lack of information.

Response: NMFS generally agrees with the Commission that it is important for NMFS to provide its basis for classifying a fishery on the LOF. However, including observer coverage information in each LOF on its own will not fully explain why a fishery is classified as Category I, II, or III. As described in the preamble of each proposed and final LOF, including this final rule, NMFS classifies fisheries on the LOF based on an assessment of several factors. One of these factors includes information collected through observer programs. However, in many cases observer data for various fisheries are either inadequate or non-existent; therefore, quantitative data on the frequency of incidental mortality and serious injury is unavailable. Per the requirements in the MMPA's implementing regulations, in the absence of reliable information indicating the frequency of incidental mortality and serious injury of marine mammals by a commercial fishery, NMFS determines whether the incidental serious injury or mortality is "occasional" or "remote" by "evaluating other factors such as fishing techniques, gear used, methods used to deter marine mammals, target species, seasons and areas fished, qualitative data from logbooks or fisher reports, stranding data, the species and distribution of marine mammals in the area, and at the discretion of the Assistant Administrator for Fisheries" (50 CFR 229.2). Therefore, including the level of observer coverage for each fishery in the LOF will not provide the reader with a complete picture of why a fishery is classified on the LOF as Category I, II, or III.

NMFS includes the information used as the basis to classify a fishery as Category I, II, or III, on the LOF for the

year in which the fishery was added to the LOF and/or reclassified on the LOF. If there is no change to the fishery in subsequent LOFs, the information outlining why a fishery is classified as Category I, II, or III, is not then repeated in each subsequent LOF. Considering that the LOF is an annual rule that presents changes to previous LOFs, repeating this information in each LOF would create a **Federal Register** notice that would be overly lengthy and cumbersome for the readers to consider on an annual basis. For this reason, NMFS provides this information on Category I and II fisheries via the fishery summaries to be considered at the readers' discretion and included these on the NMFS Office of Protected Resources' Web site: *http://www.nmfs.noaa.gov/pr/interactions/lof/.*

While NMFS has included, and will continue to include, the information used as the basis to classify a fishery as Category III in the appropriate LOF for the year in which each Category III fishery was added to, or reclassified on, the LOF, NMFS agrees that summarizing this information in one location could be useful for the reader. Therefore, NMFS will consider how to best provide this information for the readers, without creating an annual LOF rule that is overly lengthy and cumbersome, during the development of the 2012 LOF.

Comment 2: Ms. Monasevitch noted that Tables 1–3 do not list the number of marine mammal species/stocks incidentally killed or injured, only the species/stock name. Can the counts be provided?

Response: The number of marine mammal species/stocks incidentally killed or injured in each fishery on the LOF is included in tabular format in each Stock Assessment Report (SAR) and are therefore not repeated in each LOF. Please visit the NMFS Office of Protected Resources Web site to review the SARs by region or by stock: *http://www.nmfs.noaa.gov/pr/sars/.*

Comment 3: The Department of the Interior (DOI) requested NMFS continue to coordinate with the Fish and Wildlife Service (FWS) on issues involving marine mammals under FWS management jurisdiction, including providing any reports of southern sea otters (which are excluded from the MMPA's section 118 provisions for authorizing incidental take) killed or injured in a commercial fishery.

Response: NMFS will continue to coordinate with the FWS on all issues involving marine mammals under FWS jurisdiction, including sea otters, walrus, manatees, and polar bears. NMFS will also continue to provide FWS with all reports of interactions between commercial fisheries and all marine mammal species under FWS jurisdiction, including southern sea otters, that the Agency receives.

Comment 4: The Hawaii Longline Association (HLA) asserted that NMFS cannot make final determinations in the LOF based on information that appears in draft SARs and has not been subjected to the public review and comment process. The HLA stated that the draft 2010 SAR is based, in significant part, on information contained in unpublished reports, "working" papers, and reports containing "preliminary estimates." The HLA asserted that this information is not sufficient to meet the MMPA's best available scientific information standard and that decisions based on this information is contrary to the MMPA, the Administrative Procedure Act (APA), and general principles of administrative transparency and scientific rigor.

Response: NMFS responded to a similar comment on the final 2001 LOF (*see* comment/response 61; 66 FR 42780 August 15, 2001). NMFS agrees that the annual LOF must be based on the best available scientific information. For this reason, NMFS proposes changes to the annual LOF on the most current, peer-reviewed version of the SARs. The draft 2010 SARs used as the basis for the proposed and final 2011 LOFs were reviewed by the authors' peers within NMFS Fisheries Science Centers and by the Regional SRGs, which were established by the MMPA 117(d) to advise NMFS on the status of marine mammal stocks and to provide input on the draft SARs before they are released for public input. Basing the LOF on best available scientific information includes basing the LOF on the most current analyzed data. The data presented in the annual SARs have an average of a two-year time delay because of the time needed to properly analyze the data and complete the peer-review process. For that reason, the SRG-reviewed draft SAR presents the most current analyzed data and is considered the best available scientific information. When a peer-reviewed draft SAR is available, the final SAR from the previous year is no longer the best available information on which to base changes to the annual LOF. Therefore, by basing LOF changes on the most recent peer-reviewed SAR, whether draft or final, NMFS satisfies the requirements of the MMPA.

NMFS ensures transparency in the LOF rulemaking process by making the draft SARs available for public review prior to or during the public comment period for each proposed LOF. The proposed 2011 LOF opened for a 60-day public review period on June 25, 2010 (closing August 24, 2010). The draft 2010 SARs opened for a 90-day public review period on August 4, 2010. This allowed 20 days for review of the draft 2010 SARs before the close of the proposed 2011 LOF's public comment period. The overlapping availability of the public comment periods on the proposed LOF and the draft SARs allows the public to review the information upon which the LOF is based.

Comments on Commercial Fisheries in the Pacific Ocean

Comment 5: The DOI supported the continued inclusion of southwest AK northern sea otters, south central AK northern sea otters, and Pacific walrus on the list of species/stocks incidentally killed or injured in the "AK Kodiak salmon set gillnet," "AK Prince William Sound salmon drift gillnet," and "AK BSAI flatfish trawl" fisheries, respectively.

Response: NMFS has retained southwest AK northern sea otters, south central AK northern sea otters, and Pacific walrus on the list of species/stocks incidentally killed or injured in the "AK Kodiak salmon set gillnet," "AK Prince William Sound salmon drift gillnet," and "AK BSAI flatfish trawl" fisheries in this final rule.

Comment 6: The Washington Department of Fish and Wildlife (WDFW) strongly supported splitting the Washington Dungeness crab pot/trap fishery into two distinct fisheries by separating the inland "Puget Sound Dungeness crab pot/trap" fishery from the "WA coastal Dungeness crab pot/trap" fishery. The Puget Sound and coastal Dungeness crab pot/trap fisheries are both managed by WDFW but are managed under separate licensing programs and different management regimes. With no known incidental mortalities or serious injuries to marine mammals in the "Puget Sound Dungeness crab pot/trap" fishery, WDFW supported the proposal to classify the "Puget Sound Dungeness crab pot/trap" fishery under Category III in the LOF.

Response: The WA Dungeness crab trap/pot fishery is split into two fisheries in this final rule, with the "WA coastal Dungeness crab trap/pot" fishery classified as Category II and the "WA Puget Sound Dungeness crab trap/pot" fishery is classified as Category III.

Comment 7: As stated in comment 6 above, the WDFW supported elevating the "WA coastal Dungeness crab pot/trap" fishery from Category III to Category II. With the elevation of this

fishery to Category II, WDFW further requested NMFS' advice and assistance in meeting the requirements under the MMPA. WDFW staff is available to work with NMFS to create an implementation plan that minimizes the disruption to the fishery while ensuring that MMPA requirements are met.

Response: NMFS is currently working with WDFW and will continue to do so to ensure that the MMPA requirements are met, while minimizing the disruption to the fishery. The NMFS Northwest Regional Office has agreed to work with the WDFW on developing the MMAP Certificates for coastal crabbers. WDFW is currently reviewing NMFS' proposed text for these Certificates.

Comment 8: The Commission recommended NMFS provide additional justification for splitting the "WA Dungeness crab pot/trap" fishery into two fisheries, including pointing out arguments that the risks to marine mammals from the two proposed fisheries are different. The Commission noted that, while the two proposed fisheries do differ based on geography, the decision to split the fisheries should be based on meaningful evidence that the risks posed to marine mammal species are different and that the Puget Sound fishery is not likely to take any marine mammals and does not require an observer program. Additional evidence might include a difference in fishing practices or gear on the coast versus those in Puget Sound, or evidence of different movement patterns of humpback whales and other marine mammals, such as sea otters.

Response: As described in the proposed 2011 LOF and further explained in the comments supplied by WDFW (comment 6) the coastal and Puget Sound Dungeness crab trap/pot fisheries are managed under separate licensing programs and different management regimes. The State of WA already considers these as separate fisheries. More importantly, the migratory routes of humpback whales pass though the coastal waters off of the State of WA, but the migratory routes do not pass through Puget Sound. Individual humpback whales have been reported to occasionally enter Puget Sound, but NMFS has received no reports of these individuals interacting with or becoming entangled in Puget Sound Dungeness crab trap/pot gear. Trap/pot gear for both the coastal and Puget Sound Dungeness crab trap/pot fisheries are uniquely marked for identification and, therefore, NMFS is able to ascertain with which fishery a humpback whale has interacted. Individual sea otters occasionally enter Puget Sound but they have not been reported interacting with crab gear. There was one sighting of a gray whale trailing crab trap/pot gear in Puget Sound in 2003. However, this animal was successfully disentangled and released uninjured. There have been no reported interactions since that time.

The Puget Sound region has heavily populated coastlines and is a major recreational boating area. There are also several active marine mammal sighting hotlines in the region. Should entanglements of marine mammals occur in the inland waters, the potential for observation and reporting by boaters or the public on the shore is high.

Comment 9: The Commission recommended NMFS consult with the FWS, tribal authorities, and other relevant groups on the need for observer coverage of the WA Dungeness crab pot/trap fisheries both along the outer coast and in Puget Sound to assess bycatch risks for sea otters in WA state.

Response: As recommended, NMFS consulted with state and tribal crab managers. The states of WA and OR, and the Northwest Indian Fisheries Commission reported that they have received no information indicating interactions between sea otters and crab fisheries are occurring. WDFW has received complaints in some areas of harbor seals or sea lions raiding pots for bait, but not sea otters. The WA population of sea otters is at the population's Optimum Sustainable Population (OSP) level and continues to grow (FWS 2009 SAR). According to FWS' 2009 SAR there has been only one stranding incident of a northern sea otter, in 2003, where human interaction may have been implicated based on necropsy findings. In this case, the animal died from trauma, possibly a boat strike.

Comment 10: The CA Wetfish Producers Association agreed with multiple proposed changes to the LOF, including reclassifying the "CA anchovy, mackerel, sardine purse seine" and "CA squid purse seine" fisheries from Category II to Category III; updating the number of vessels participating in the "CA anchovy, mackerel, sardine purse seine fishery;" and removing bottlenose dolphins (CA/OR/WA offshore stock) from the list of species/stocks incidentally killed or injured in the "CA anchovy, mackerel, sardine purse seine" fishery.

Response: NMFS has finalized each of the proposed changes referenced in Comment 10 in this final rule.

Comment 11: The CA Wetfish Producers Association noted the number of vessels participating in the "CA squid purse seine" fishery is proposed to be increased from 64 to 65 vessels. However, according to CA Department of Fish and Game authorities, the number of squid vessel permits sold in 2010 is 71 transferable vessel permits and 9 non-transferable vessel permits, for a total of 80 vessels eligible to participate in the squid fishery.

Response: NMFS appreciates the information and has updated Table 1 to reflect that the estimated number of vessels/persons participating in the Category III "CA squid purse seine" fishery is 80.

Comment 12: The Oregon Department of Fish and Wildlife (ODFW) requested that OR be removed from the name of the "CA/OR thresher shark/swordfish drift gillnet" fishery. ODFW noted that the OR commercial drift gillnet fishery historically existed as an extension of the CA fishery, targeting swordfish as allowed under ODFW's Developmental Fisheries Program. For the last few years this fishery has been inactive and OR has not issued permits for such a fishery in state waters. Also, swordfish were removed from the program in 2009. OR no longer issues state permits for drift gillnet gear.

Response: NMFS appreciates the information provided by ODFW and has changed the name of the fishery to the Category III "CA thresher shark/swordfish drift gillnet (≥ 14 in mesh)" fishery in this final rule.

Comment 13: The DOI recommended NMFS continue to include CA sea otters on the list of species/stocks incidentally killed or injured in the "CA halibut/white seabass and other species set gillnet" fishery and add CA sea otters to the list of species/stocks incidentally killed or injured in the "CA coonstripe shrimp, rock crab, tanner crab pot or trap" and "CA spiny lobster trap" fisheries. Due to lack of observer coverage, the FWS does not have recent data to confirm that sea otters are injured or killed in these fisheries; however, experiments have shown that sea otters can enter these traps and drown.

Response: NMFS removed southern sea otters from the list of species/stocks incidentally killed or injured in the Category III "CA coonstripe shrimp, rock crab, tanner crab pot or trap" and "CA spiny lobster trap" fisheries in the 2009 LOF. As detailed in the proposed 2009 LOF (73 FR 33760, June 13, 2008), NMFS extensively reviewed each of the CA pot and trap fisheries, including available information on marine mammal species that interact with these fisheries. At that time, NMFS had records of one southern sea otter being taken in the "CA targeting spiny lobster, coonstripe shrimp, finfish, rock crab, or

tanner crab trap/pot" fishery in November 1987 and one southern sea otter interacting with the "CA spot prawn trap" fishery in 1991. NMFS has received no new or additional information since the 2009 LOF to suggest that sea otters are being incidentally killed or injured by these gear types. Therefore, NMFS has not included sea otters on the list of species/stocks incidentally killed or injured in these two fisheries. If additional information becomes available to indicate that southern sea otters have been injured or killed in CA trap/pot fisheries in recent years, NMFS will consider including this species on the LOF at that time.

Comment 14: The Commission supported retaining the "HI shallow-set (swordfish target) longline/set line" fishery as Category II based on the mortality and serious injury rate of bottlenose dolphins (HI pelagic stock) and the additional information documenting takes of marine mammals from other stocks.

Response: The "HI shallow-set (swordfish target) longline/set line" fishery is classified as Category II in this final rule.

Comment 15: The HLA noted that the proposed LOF classifies the "HI shallow-set (swordfish target) longline/set line" fishery as Category II by the fishery's serious injury and mortality rate for bottlenose dolphin, which is only 1.1 percent of the stock's PBR, and because of documented mortalities and serious injuries of other stocks on the high seas for which PBRs are unknown. The HLA disagreed with this justification and argued that NMFS must make the LOF determinations based on the best available science, not speculation that takes may exceed 1 percent of a stock's PBR. The HLA further stated that in the absence of knowledge about the identity or abundance of stocks with which a fishery may have interactions, NMFS cannot assume that any interactions may exceed 1 percent of the stock's PBR.

Response: As noted in the draft 2010 SAR, the HI Pelagic stock of bottlenose dolphins includes animals found both within the U.S. EEZ around the Hawaiian Islands and in adjacent international waters, but because data on abundance, distribution, and human-caused impacts are largely lacking for international waters, the status of the stock is evaluated based on data from U.S. EEZ waters. In the SAR, the stock's PBR is calculated only for the portion of the stock within the U.S. EEZ around the Hawaiian Islands.

The average annual level of mortalities and serious injuries of the HI pelagic stock of bottlenose dolphins that occurs incidental to the HI shallow-set longline fishery inside the U.S. EEZ around the Hawaiian Islands is greater than 1 percent and less than 50 percent of the stock's PBR level. This level of mortality and serious injury is close to, but exceeds, the threshold between Categories II and III (*e.g.,* mortality and serious injury greater than 1 percent of PBR), and thus a Category II classification is warranted (50 CFR 229.2). Details regarding how the threshold percentages between the categories were determined are provided in the preamble to the final rule implementing section 118 of the MMPA (60 FR 45086, August 30, 1995).

In NMFS' proposal to classify this fishery in the proposed 2011 LOF, NMFS noted that there are documented injuries and mortalities of numerous other species and stocks of marine mammals on the high seas, which are listed in Table 3 for the high seas component of the shallow-set longline fishery ("Western Pacific Pelagic (Shallow-set component)"). There are no abundance estimates or PBRs currently available for most of these marine mammals on the high seas, and quantitative comparison of mortality and serious injury against PBR is therefore not possible. NMFS is not assuming that interactions on the high seas exceed 1 percent of any stock's PBR. Rather, these interactions provide a qualitative indication that the shallow-set fishery's interactions with marine mammals on the high seas are "occasional." 50 CFR 229.2 provides that in the absence of reliable information indicating the frequency of incidental mortality and serious injury of marine mammals by a commercial fishery, the Assistant Administrator will determine whether the incidental serious injury or mortality is "occasional" by evaluating other factors such as fishing techniques, gear used, methods used to deter marine mammals, target species, seasons and areas fished, qualitative data from logbooks or fisher reports, stranding data, and the species and distribution of marine mammals in the area, or at the discretion of the Assistant Administrator.

As noted in the preamble of the proposed 2011 LOF and the response to a similar comment in the final 2010 LOF (74 FR 58859, November 16, 2009; comment/response 17) regarding high seas fisheries classification, the high seas portion of the shallow-set longline fishery is an extension of the fishery operating within U.S. waters, and not a separate fishery. A fishery is classified on the LOF as its highest level of classification (*e.g.,* a fishery qualifying for Category II for one marine mammal stock and Category III for another marine mammal stock will be listed as Category II). Since the "Western Pacific Pelagic (Shallow-set component)" and "HI shallow-set (swordfish target) longline/set line" are two components of the same fishery, targeting the same species and employing the same gear, fishing techniques, and methods to deter marine mammals, distinguished from each other only by which side of the 200 nmi EEZ boundary they operate, and the component of the fishery operating in U.S. waters is classified as Category II, the high seas component of the fishery is also classified as Category II.

Comment 16: The Commission recommended NMFS list the "HI kaka line" and the "HI vertical longline" fisheries as Category II fisheries and work with the State of HI to create an effective observer program for each fishery. NMFS noted in the proposed 2011 LOF, and the Commission concurred, that the "HI kaka line" fishery may be analogous to the Category II Hawaii shortline fishery. The Commission also considered the vertical longline fishery to be analogous because the gear is similar and presents similar risks to marine mammals. The Commission believed that an appropriate approach would be to establish an observer program to better characterize the nature and level of the interactions of these fisheries with marine mammals, before assuming that such interactions do not or only rarely occur.

Response: At this time, there is no information to support a Category II classification for either of these two fisheries. NMFS did note in the proposed 2011 LOF that the kaka line fishery may be analogous to the shortline fishery because the gear used is similar in one respect, specifically a mainline less than 1 nautical mile in length to which multiple branchlines with baited hooks are attached. However, NMFS further stated in the proposed LOF that the gear in the "HI kaka line" fishery is oriented differently in the water than the gear in the "HI shortline" fishery, with "HI kaka line" fishery gear being fixed on or near the bottom or in shallow midwater.

50 CFR 229.2 states that in absence of reliable information indicating the frequency of incidental mortality and serious injury of marine mammals by a commercial fishery, NMFS will determine whether the incidental serious injury or mortality is "frequent," "occasional," or "remote" by evaluating

other factors. Therefore, NMFS also examined other factors and considers the "HI kaka line" and "HI vertical line" fisheries to be sufficiently different from the HI-based longline fisheries and the HI shortline fishery in terms of the fish species targeted, methods of setting gear, and location and orientation of the gear in the water column, to pose a lower risk to marine mammals such that the likelihood of incidental interactions is remote. Additionally, while there are anecdotal reports of interactions between the shortline fishery and marine mammals, there is no such information regarding the kaka line or vertical longline fisheries. If additional information becomes available that would indicate an elevation in classification is necessary, NMFS will consider reclassification of one or both of these fisheries at that time.

Comment 17: The Natural Resources Defense Council (NRDC) urged NMFS to reconsider the proposed classification of the "HI trolling, rod and reel" and "HI charter vessel" fisheries as Category III given their bycatch of pantropical spotted dolphins. The NRDC provided multiple literature citations documenting dolphins taking lures and being hooked when HI troll fishermen "fish" on the dolphins, including spotted dolphins, to catch associated tuna. The NRDC stated that one serious injury or mortality a year for pantropical spotted dolphins would exceed the regulatory ceiling of 1 percent of the PBR of 61 (2010 SAR, which also states that future assessments may divide the HI population into smaller island-associated stocks). The NRDC asserts that where the frequency of bycatch is unknown, NMFS is required to determine whether serious injury or mortality is "remote" by taking into account other factors, including target species and fishing techniques (50 CFR 229.2).

Response: NMFS will review the information provided by the commenter and consider adding this species to the list of species or stocks incidentally killed or injured in one or both of these fisheries in the next proposed LOF. NMFS will also consider reclassification of one or both of these fisheries at that time, if circumstances warrant.

Comment 18: The HLA reiterated past comments that NMFS inaccurately delineates the pelagic false killer whale stock, therefore underestimating the false killer whale population with which the "HI deep-set (tuna target) longline/set line" fishery interacts and exaggerating the importance of those rare interactions.

Response: NMFS responded to similar comments on the 2010 LOF (74 FR 58859; November 16, 2009; comments/responses 17 and 24), which are incorporated in this response by reference. This comment does not specifically address the classification of fisheries or the marine mammal species and stock incidentally killed or injured in a fishery, but rather disputes the delineation of those stocks and stock population estimates. Classifications on the LOF are based on the information provided in the annual SARs. The SARs report marine mammal stock delineations and include discussions of the uncertainties in the data used to base stock delineations. NMFS urges the commenter to submit these comments during the public comment period for the draft SARs.

Comment 19: The HLA restated an ongoing comment that there are significant uncertainties and errors perpetuated in NMFS' SARs, which are then used to generate inaccurate LOFs. The HLA disagreed that it would be prudent for NMFS to make LOF determinations for 2011 based on data that NMFS knows will become stale (as defined by NMFS guidelines) in 2010. The HLA recommended that NMFS, at the least, expressly recognize the uncertainty underlying its estimates and decisions.

Response: Changes to the 2011 LOF are largely based on the 2009 SARs, as updated in the draft 2010 SARs. The draft 2010 SARs for many of the Hawaiian cetacean stocks present abundance estimates based on data from a 2002 NMFS shipboard line-transect survey of the U.S. EEZ around the Hawaiian Islands (Hawaiian Islands Cetacean and Ecosystem Assessment Survey, or HICEAS). The NMFS Guidelines for Assessing Marine Mammal Stocks (GAMMS) note that confidence in the reliability of abundance estimates declines with age, and recommend that minimum population estimates older than 8 years should be considered unknown, and therefore should not be used to calculate PBR (*http://www.nmfs.noaa.gov/pr/pdfs/sars/gamms2005.pdf*). As of 2011, data derived from the 2002 survey will be considered too uncertain for stock assessment. NMFS is currently conducting a new cetacean assessment survey in the U.S. EEZ around the Hawaiian Islands (HICEAS II) in August-December 2010. It is anticipated that the HICEAS II survey will result in updated abundance estimates for all Hawaiian cetaceans. Preliminary estimates will likely be available by the end of 2011 or early 2012. However, the currently available data and estimates still constitute the best available information within existing NMFS parameters, and therefore are appropriately included in the 2010 SARs and 2011 LOF.

Comment 20: The HLA recommended NMFS not add false killer whales (HI insular stock) to the list of marine mammal stocks incidentally killed or injured in the "HI deep-set (tuna target) longline/set line" fishery. The HLA stated that the best available science does not demonstrate that the deep-set fishery has ever interacted with an animal from the insular stock. The HLA further stated that the one interaction that NMFS purports to assign to the deep-set fishery occurred well beyond the range in which the insular stock animals have been scientifically observed.

Response: NMFS determines which species or stocks are included on the list of species/stocks incidentally killed or injured in a fishery by annually reviewing, in part, the information presented in the current SARs, which are based on the best available scientific information and provide the most current and inclusive information on each stock's PBR level and level of interaction with commercial fishing operations. The LOF does not analyze or evaluate the SARs. The commenter questions the validity of the data and calculations contained within the SAR for false killer whales, and thus it would be more appropriate for this comment to be submitted during the public comment period for the draft SAR.

The draft 2010 SAR for false killer whales indicates an average of 0.6 false killer whales (HI insular stock) are killed or seriously injured per year incidental to the Hawaii deep-set longline fishery. One non-serious injury was observed within the newly defined overlap zone between the HI insular and HI pelagic stocks of false killer whales. Total estimated takes were prorated based on the proportions of observed interactions that resulted in death, serious injury, or non-serious injury. Further, takes of false killer whales of unknown stock origin within the insular/pelagic stock overlap zone were prorated based on the density of each stock in that area. No genetic samples are available to establish stock identity for these takes, but both stocks are considered at risk of interacting with longline gear within this region. Additionally, the draft 2010 SAR reports that from 2004–2008, two unidentified cetaceans that may have been false killer whales were seriously injured in the deep-set longline fishery, within the insular stock range. Efforts are currently underway to develop methods of prorating the unidentified animals by species and stock, taking into account

geographic differences in their ranges and observed rates of documented interactions with each species. For these reasons, NMFS is adding the HI insular stock of false killer whales to the list of marine mammal stocks incidentally killed or injured in the HI deep-set longline fishery, as proposed in the proposed 2011 LOF.

Comment 21: The HLA recommended NMFS not label the false killer whales on which the "HI deep-set (tuna target) longline/set line" fishery interacts on the high seas as "HI Pelagic." The HLA asserted that such a designation ignores the fact that high seas false killer whale interactions may occur with animals from other international high seas stocks, a larger Eastern North Pacific stock, or the Palmyra stock.

Response: The draft 2010 SAR clarifies that the HI pelagic stock of false killer whales includes animals found both within the U.S. EEZ around the Hawaiian Islands and adjacent international waters. The deep-set longline fishery has documented interactions with false killer whales just outside of the U.S. EEZ around the Hawaiian Islands, as reported in the draft 2010 SAR, and these are almost certainly from the HI pelagic stock. Therefore, NMFS is adding false killer whale (HI pelagic stock) to the list of species/stocks incidentally killed or injured in the "Western Pacific Pelagic (Deep-set component)" fishery on Table 3, as proposed in the 2011 proposed LOF.

The draft 2010 SAR also reports that while the range of the HI pelagic stock of false killer whales extends into international waters, the full offshore range of the stock beyond the EEZ is poorly known. NMFS agrees with HLA that the deep-set longline fishery may be interacting with false killer whales from other stocks on the high seas, beyond the (unknown) range of the HI pelagic stock. For this reason, NMFS will retain false killer whale (stock unknown) on the list of marine mammal species and stocks incidentally killed or injured in the "Western Pacific Pelagic (deep-set component)" fishery on Table 3.

Similarly, marine mammals from other pelagic stocks are also killed or injured by both the deep-set and shallow-set longline fisheries on the high seas at varying distances beyond the U.S. EEZ around the Hawaiian Islands, and some of the interactions may be from unknown high seas stocks beyond the (unknown) range of the transboundary HI pelagic stocks. NMFS will examine the spatial patterns of observed mortality and injury of the other pelagic stocks and any information on the stock identity of these animals, and may propose the addition of unknown stocks for some or all of these marine mammal species in the proposed 2012 LOF, if warranted.

The range of the Palmyra Atoll stock of false killer whales is currently defined in the draft 2010 SAR as the U.S. EEZ around Palmyra Atoll. Therefore, this stock is listed as incidentally killed or injured in the U.S. EEZ portion of the deep-set longline fishery, the "HI deep-set (tuna target) longline/set line" fishery, on Table 1, and not in Table 3 for the high seas component of the fishery.

Comment 22: The Western Pacific Fishery Management Council (WPFMC) requested NMFS clarify the justification for proposing to classify the "HI shortline" fishery as Category II based on analogy to other fisheries and based on anecdotal reports of interactions. The WPFMC requested that NMFS explain what is meant by proposing to list this fishery by analogy, including how a fishery may be categorized at all when there are no reported or known interactions with marine mammals. In addition, the WPFMC questioned NMFS' use of anecdotal reports of interactions with marine mammals and speculations that this fishery caused documented false killer whale dorsal fin disfigurements to support a proposed Category II classification.

Response: Fisheries are classified on the annual LOF via NMFS' well-documented process of analyzing known or estimated levels of mortality and serious injury relative to a stock's PBR level (as outlined in the preamble of each proposed and final LOF, including this final rule). In some cases, a fishery that has no recent documented injuries or mortalities of marine mammals may be classified in Category II by analogy to another Category I or II fishery or fisheries that use similar gear types, fishing methods, and/or fish in similar areas that are known to cause mortality and serious injury of marine mammals. In those instances, additional available information (such as qualitative data from stranding reports, fishermen self-reports, or anecdotal information) may also be used to indicate that serious injury or mortality of marine mammals may be occurring that is likely to exceed the Category III threshold (50 CFR 229.2). NMFS indicates those fisheries classified as Category II by analogy to another Category I or II fishery in Tables 1 and 2 by placing a "[2]" after the fishery's name. Only marine mammal mortality and serious injury that can be assigned to a specific fishery is included in the list of species/stocks incidentally killed or injured for that fishery. Marine mammal species and stocks are not added to the list of species/stocks incidentally killed or injured by analogy.

The "HI shortline" fishery was originally added to the LOF in 2010. NMFS listed the fishery in Category II by analogy to the Category I "HI deep-set (tuna target) longline" and Category II "HI shallow-set (swordfish target) longline" fisheries because of similarities between the three fisheries in the gear used, the areas fished, and species targeted that indicated the "HI shortline" fishery likely poses a similar risk of killing or seriously injuring marine mammals. Additionally, NMFS received anecdotal reports of marine mammal interactions in the "HI shortline" fishery, though the species involved and the extent of the interactions was unknown. While dorsal fin disfigurements documented in individuals from the insular stock of false killer whales (Baird and Gorgone 2005) are consistent with injuries from unidentified fishing line, it is unknown at present whether these injuries might have been caused by longline gear, shortline gear, or other hook-and-line gear used around the main Hawaiian Islands. Because the species of marine mammals involved in the reported interactions was unknown, there are no species currently listed on the LOF as incidentally injured or killed in the "HI shortline" fishery.

Classifying a fishery as Category II provides NMFS the authority to place observers on board the vessels to gain more information on the actual level of interactions with marine mammals occurring in the fishery. Funding is not currently available to establish such an observer program for the "HI shortline" fishery, but when and if funding becomes available in the future, NMFS will coordinate with the state of HI to consider developing and implementing an observer program for this fishery.

Comments on Commercial Fisheries in the Atlantic Ocean, Gulf of Mexico and Caribbean

Comment 23: The Commission supported the elevation of the "Southeastern U.S. Atlantic, Gulf of Mexico shrimp trawl" fishery from Category III to Category II and the addition of Atlantic spotted dolphin (northern Gulf of Mexico stock) to the list of species/stocks incidentally killed or injured in this fishery.

Response: The "Southeastern U.S. Atlantic, Gulf of Mexico shrimp trawl" fishery is classified as Category II in this final rule.

Comment 24: The Commission recommended NMFS set the boundary

between the Northeast and Mid-Atlantic bottom trawl fisheries at the location that will result in the most reliable estimates of bycatch for the two fisheries. In the proposed LOF, NMFS proposed to change the boundary used to separate these fisheries from 72°30′ W. long. to 70° W. long. The latter is used by the Northeast Fisheries Science Center for estimating marine mammal bycatch. For the fisheries involved, this change may have a number of implications that the Commission is not able to evaluate based upon the information provided in the proposed rule. The key consideration for the Commission is that incidental taking of marine mammals is correctly attributed to the two fisheries.

Response: NMFS agrees that maintaining consistency for estimating incidental marine mammal bycatch is essential; therefore, the proposed change will provide this consistency necessary to ensure appropriate incidental takes are attributed to the correct fishery. NMFS does not foresee any additional current or future management implications associated with this change.

Comment 25: The Commission reiterated a past recommendation that NMFS develop new methods to produce accurate estimates of effort for several Mid-Atlantic and New England fisheries. The Commission suggested that the methods may need to change depending on the nature of the fisheries (*e.g.,* how often vessels return to port, how large the vessels are, and whether they can carry observers). Although the Commission understood that actual effort levels may not be known, the new method of measuring effort reveals significant uncertainty in key fishery information that may confound other measures of the fishery and its effects. The Commission asserted that while these changes may not have a direct effect on fisheries policy or observer coverage, the broader and longer-term implications of the changes and the associated uncertainty are unknown but potentially significant for management of the marine environment.

Response: Table 2 lists each Northeast and Mid-Atlantic fishery on the LOF, including the estimated number of persons/vessels active in the fishery. Currently, a clear measure of effort for all state fisheries in the Northeast and Mid-Atlantic has not been determined due to the manner in which many state permits allow for the use of multiple gear types. Therefore, NMFS has determined that this column in Table 2 for Northeast and Mid-Atlantic fisheries will be representative of current permit holders, state and Federal, that have the potential to participate in a particular fishery. As stated in the proposed 2011 LOF, NMFS recognizes there may be disparity between permit holders listed and actual fishery effort; however, the numbers provided in the LOF are used for descriptive purposes and will not be used in determining current or future management of fisheries or observer coverage designations.

Comment 26: The DOI supported the continued inclusion of the Florida subspecies of the West Indian manatee on the list of species/stocks incidentally killed or injured in the "Atlantic blue crab trap/pot" and "Gulf of Mexico blue crab trap/pot" fisheries.

Response: NMFS has retained the Florida subspecies of the West Indian manatee on the list of species/stocks incidentally killed or injured in the "Atlantic blue crab trap/pot" and "Gulf of Mexico blue crab trap/pot" fisheries in this final rule.

Comment 27: The DOI recommended NMFS remove the Antillean subspecies of the West Indian manatee from the list of species/stocks incidentally killed or injured in the "Caribbean gillnet" and "Caribbean haul/beach seine" fisheries. The DOI is unaware of any manatees taken in either fishery. In addition, use of all haul/beach seine nets and the use of gill and trammel nets in river mouths, rivers, and lagoons in Puerto Rico has been prohibited since 2004.

Response: NMFS agrees with the DOI recommendation to remove the Antillean subspecies of the West Indian manatee from the list of species/stocks incidentally killed or injured in the "Caribbean gillnet" and "Caribbean haul/beach seine" fisheries. Based on information provided in the FWS' 2009 SAR, lack of evidence from stranding events, and the implementation of Puerto Rico Regulation 678 of the 2004 Fisheries Law, the Antillean subspecies of the West Indian manatee has been removed from the list of species/stocks incidentally killed or injured in these fisheries in this final rule.

Comment 28: The DOI recommended NMFS remove the Florida subspecies of the West Indian manatee from the list of species/stocks incidentally killed or injured in the "Southeastern U.S. Atlantic, Gulf of Mexico shrimp trawl" fishery. The DOI is unaware of any manatees taken in this fishery since 1987.

Response: NMFS appreciates this comment. However, NMFS does not support removing the Florida subspecies of the West Indian manatee from the list of species/stocks incidentally killed or injured in the "Southeastern U.S. Atlantic, Gulf of Mexico shrimp trawl" fishery at this time. There has been at least one confirmed take in this fishery since 1987; a manatee that was killed by a commercial shrimp trawler, with an observer aboard, in Georgia in 1997. Also, according to the FWS' 2009 SAR, the bait shrimp fishery was suggested to cause three unconfirmed manatee mortalities in 1990. Furthermore, observer coverage for the shrimp trawl fishery has been less than 1 percent since 1992. Due to extremely low observer coverage, confirmed and unconfirmed takes by the fishery, and the spatial and temporal co-occurrence of the shrimp trawl fishery and the Florida subspecies of the West Indian manatee, NMFS believes there is at least a remote likelihood of incidental mortality and serious injury for the Florida subspecies of the West Indian manatee. Therefore, NMFS is retaining this species on the list of species/stocks incidentally killed or injured in the "Southeastern U.S. Atlantic, Gulf of Mexico shrimp trawl" fishery.

Comment 29: The Commission recommended NMFS increase observer coverage in the "Southeastern U.S. Atlantic, Gulf of Mexico shrimp trawl" fishery and conduct the stock assessments necessary to estimate reliable potential biological removal levels for the affected marine mammal stocks.

Response: As stated in response to similar comments on past LOFs, NMFS continues to agree about the importance of increasing observer coverage for the "Southeastern U.S. Atlantic, Gulf of Mexico shrimp trawl" fishery, as well as investigating stock structure and abundance of bottlenose dolphins in the Gulf of Mexico.

Increasing observer coverage for these fisheries remains a priority if resources become available. Meanwhile, NMFS will continue monitoring fishermen self-reports and stranding data, as well as fishery observer reports. NMFS remains focused on increasing the capacity of the stranding network especially in the Gulf of Mexico. NMFS provided human interaction trainings at the 2010 National Marine Animal Health and Stranding Network Conference. As a result of the BP/Deepwater Horizon MC252 oil spill response and restoration efforts, NMFS is working to strengthen infrastructure and increase the capacity of the stranding network which are now critical in monitoring the health of marine mammal stocks in the Gulf of Mexico, and will also be useful for assessing the extent of fishery interactions.

NMFS supports further investigation of stock structure and abundance of affected marine mammal stocks in the

Gulf of Mexico. PBR is undetermined for most stocks because the population estimates are greater than eight years old and/or resources were unavailable to conduct surveys where information is outdated. However, due to the BP/Deepwater Horizon MC252 oil spill response and restoration efforts, additional surveys and mark-recapture studies are being conducted for some bay, sound, and estuarine stocks of marine mammals in the Gulf of Mexico. Results from these studies will provide updated abundance estimates and PBR for some stocks. Stock assessments for Gulf of Mexico cetaceans remain a priority if resources become available. These additional efforts will provide baseline data for stock structure and abundance estimates for some marine mammal stocks.

Summary of Changes to the LOF for 2011

The following summarizes changes to the LOF for 2011 in fishery classification, fisheries listed in the LOF, the number of participants in a particular fishery, and the species and stocks that are incidentally killed or injured in a particular fishery. The classifications and definitions of U.S. commercial fisheries for 2011 are identical to those provided in the LOF for 2010 with the changes outlined below.

Commercial Fisheries in the Pacific Ocean

Fishery Classification

The "WA coastal Dungeness crab pot/trap" fishery (split from the Category III "WA Dungeness crab pot" fishery and renamed the "WA coastal Dungeness crab pot/trap" fishery in this rule) is elevated from Category III to Category II.

The "CA thresher shark/swordfish drift gillnet" fishery (renamed from the "CA/OR thresher shark/swordfish drift gillnet" fishery in this rule) is reclassified from Category I to Category III.

The "CA anchovy, mackerel, sardine purse seine" fishery is reclassified from Category II to Category III.

The "CA squid purse seine" fishery is reclassified from Category II to Category III.

The "CA tuna purse seine" fishery is reclassified from Category II to Category III.

Addition of Fisheries

The "HI kaka line" fishery is added to the LOF as Category III.

The "HI vertical longline" fishery is added to the LOF as Category III.

The "HI crab net" fishery is added to the LOF as Category III.

The "HI hukilau net" fishery is added to the LOF as Category III.

The "HI lobster tangle net" fishery is added to the LOF as Category III.

The "HI bullpen trap" fishery is added to the LOF as Category III.

The "WA Puget Sound Dungeness crab pot/trap" fishery (split from the Category III "WA Dungeness crab pot" fishery in this rule) is added as a separate Category III fishery on the LOF.

Fishery Name and Organizational Changes and Clarifications

The Category III "HI squiding, spear" fishery is renamed as the "HI spearfishing" fishery.

The Category III "HI Main Hawaiian Islands, Northwestern Hawaiian Islands deep sea bottomfish" fishery is renamed as the "HI Main Hawaiian Islands deep-sea bottomfish handline" fishery.

The Category III "HI Kona crab loop net" fishery is moved from the "Purse Seine, Beach Seine, Round Haul, and Throw Net Fisheries" heading in Table 1 to the "Pot, Ring Net, and Trap Fisheries" heading.

"Tangle Net" is added to the name of the Category III "Purse Seine, Beach Seine, Round Haul and Throw Net Fisheries" heading in Table 1.

The Category III "CA/OR thresher shark/swordfish drift gillnet" fishery is renamed the "CA thresher shark/swordfish drift gillnet" fishery.

The Category III "WA Dungeness crab pot" fishery is split into two separate fisheries, the Category II "WA coastal Dungeness crab pot/trap" fishery and the Category III "WA Puget Sound Dungeness crab pot/trap" fishery.

A superscript "2" is added after the Category II "CA yellowtail, barracuda, and white seabass drift gillnet (mesh ≥ 3.5 in and < 14 in)" fishery in Table 1.

Number of Vessels/Persons

The estimated numbers of persons/vessels participating in the following Category II CA/OR/WA fisheries are updated: "CA halibut/white seabass and other species set gillnet" fishery from 58 to 50; "CA yellowtail, barracuda, and white seabass drift gillnet" fishery from 24 to 30; "CA spot prawn pot" fishery from 29 to 27; "CA Dungeness crab pot" fishery from 625 to 534; and "CA/OR/WA sablefish pot" fishery from 155 to 309.

The estimated numbers of persons/vessels in the following Category III CA/OR/WA fisheries are updated: "CA thresher shark/swordfish drift gillnet" fishery (renamed from "CA/OR thresher shark/swordfish drift gillnet" fishery in this rule) from 85 to 45; "CA squid purse seine" fishery from 64 to 80; and "CA anchovy, mackerel, sardine purse seine" fishery from 63 to 65.

The estimated number of persons/vessels in the Category I "HI deep-set (tuna target) longline/set line" fishery is updated from 129 to 127.

The estimated number of persons/vessels in the Category II "HI shortline" fishery is updated from 11 to 21.

The estimated numbers of persons/vessels in the following Category III HI fisheries are updated: "HI inshore gillnet" fishery from 5 to 39; "HI Kona crab loop net" fishery from 42 to 41; "HI opelu/akule net" fishery from 12 to 20; "HI inshore purse seine" fishery from 23 to 8; "HI throw net, cast net" fishery from 14 to 28; "HI trolling, rod and reel" fishery from 1,321 to 2,210; "HI crab trap" fishery from 22 to 9; "HI fish trap" fishery from 19 to 11; "HI lobster trap" fishery from 0 to 3; "HI shrimp trap" fishery from 5 to 1; "HI aku boat, pole, and line" fishery from 4 to 6; "HI inshore handline" fishery from 307 to 460; "HI tuna handline" fishery from 298 to 531; "HI handpick" fishery from 37 to 53; "HI lobster diving" fishery from 19 to 36; "HI spearfishing" fishery from 91 to 163; and "HI Main Hawaiian Islands deep-sea bottomfish handline" fishery from 300 to 580.

List of Species or Stocks Incidentally Killed or Injured

Humpback whale (CA/OR/WA stock) is added to the list of species/stocks incidentally killed or injured in the Category II "WA coastal Dungeness crab pot/trap" fishery, followed by a superscript "1".

Humpback whale (CA/OR/WA stock) is added to the list of species/stocks incidentally killed or injured in the Category II "CA halibut/white seabass and other species set gillnet (> 3.5 in mesh)" fishery, followed by a superscript "1".

Short finned pilot whales (CA/OR/WA stock) is removed from the list of species/stocks incidentally killed or injured in the Category II "CA thresher shark/swordfish drift gillnet" fishery (renamed from "CA/OR thresher shark/swordfish drift gillnet" fishery in this rule).

Bottlenose dolphin (CA/OR/WA offshore stock) is removed from the list of species/stocks incidentally killed or injured in the Category III "CA anchovy, mackerel, sardine purse seine" fishery.

Risso's dolphin (CA/OR/WA stock) is removed from the list of species/stocks incidentally killed or injured in the Category III "CA pelagic longline" fishery.

The superscript "1" after CA sea lions (U.S. stock) and harbor seals (CA stock) is removed from the list of species/

stocks incidentally killed or injured in the Category II "CA halibut/white seabass and other species set gillnet (> 3.5 in mesh)" fishery.

The superscript "2" is removed after the Category II "CA Dungeness crab pot" fishery in Table 1 and a superscript "1" is added after humpback whale (CA/OR/WA stock) in the list of species/stocks incidentally killed or injured in this fishery.

False killer whale (Palmyra Atoll stock) is added to the list of species/stocks incidentally injured or killed in the Category I "HI deep-set (tuna target) longline/set line" fishery.

False killer whale (HI Insular stock) is added to the list of species/stocks incidentally injured or killed in the Category I "HI deep-set (tuna target) longline/set line" fishery, followed by a superscript "1".

The stock of bottlenose dolphin incidentally killed or injured in the Category I "HI deep-set (tuna target) longline/set line" fishery is changed from "HI stock" to "HI Pelagic stock."

The stock of pantropical spotted dolphin incidentally killed or injured in the Category I "HI deep-set (tuna target) longline/set line" fishery is changed from "stock unknown" to "HI stock."

The superscript "1" is removed after humpback whale (Central North Pacific stock) in the list of species/stocks incidentally killed or injured in the Category II "HI shallow-set (swordfish target) longline/set line" fishery.

The stock of bottlenose dolphin incidentally killed or injured in the Category II "HI shallow-set (swordfish target) longline/set line" fishery is changed from "stock unknown" to "HI Pelagic stock."

A superscript "1" is added after bottlenose dolphin (HI Pelagic stock) in the list of species/stocks incidentally killed or injured in the Category II "HI shallow-set (swordfish target) longline/set line" fishery.

Striped dolphin (HI stock) is added to the list of species/stocks incidentally injured or killed in the Category II "HI shallow-set (swordfish target) longline/set line" fishery.

False killer whale (HI Pelagic stock) if added to the list of species/stocks incidentally killed or injured in the Category II "HI shallow-set (swordfish target) longline/set line" fishery.

Kogia spp. whale (HI stock) is added to the list of species/stocks incidentally killed or injured in the Category II "HI shallow-set (swordfish target) longline/set line" fishery.

The stock of Bryde's whale incidentally killed or injured in the Category II "HI shallow-set (swordfish target) longline/set line" fishery is changed from "stock unknown" to "HI stock."

The stock of Risso's dolphin incidentally killed or injured in the Category II "HI shallow-set (swordfish target) longline/set line" fishery is changed from "stock unknown" to "HI stock."

Sperm whale (stock unknown) is removed from the list of species/stocks incidentally killed or injured in the Category II "HI shallow-set (swordfish target) longline/set line" fishery.

The stock of false killer whale incidentally killed or injured in the Category II "American Samoa longline" fishery is changed from "stock unknown" to "American Samoa."

Rough-toothed dolphin (American Samoa stock) is added to the list of species/stocks incidentally killed or injured in the Category II "American Samoa longline" fishery.

Commercial Fisheries in the Atlantic Ocean, Gulf of Mexico, and Caribbean

Fishery Classification

The "Southeastern U.S. Atlantic, Gulf of Mexico shrimp trawl" fishery is elevated from Category III to Category II.

Removal of Fisheries

The separate listing for the Category II "Mid-Atlantic flynet" fishery is removed from the LOF.

Fishery Name and Organizational Changes and Clarifications

The Category II "Mid-Atlantic flynet" fishery is incorporated into the Category II "Mid-Atlantic bottom trawl" fishery and the fishery definition for the "Mid-Atlantic bottom trawl" fishery is updated to reflect this change.

American eel is removed as a species targeted in Category II "Atlantic mixed species trap/pot" fishery and the fishery definition is updated to reflect this change.

The list of target species for the Category II "Northeast drift gillnet" fishery is updated and the fishery definition is updated to reflect this change.

The list of bodies governing the Category II "Northeast mid-water trawl" fishery is updated and the fishery definition is updated to reflect this change.

The list of FMPs applicable to the Category II "Northeast bottom trawl" and the Category I "Northeast sink gillnet" fisheries are updated and the fishery definitions are updated to reflect this change.

The spatial boundaries for the Category II "Northeast bottom trawl" and "Mid-Atlantic bottom trawl" fisheries are updated and the fishery definitions are updated to reflect this change.

Number of Vessels/Persons

The estimated numbers of persons/vessels in the following Category I fisheries are updated: "Mid-Atlantic gillnet" fishery from > 670 to 5,495; "Northeast sink gillnet" fishery from 341 to 7,712; and "Northeast/Mid-Atlantic American lobster trap/pot" fishery from 13,000 to 12,489.

The estimated numbers of persons/vessels in the following Category II fisheries are updated: "Southeastern U.S. Atlantic, Gulf of Mexico shrimp trawl" fishery from > 18,000 to 4,950; "Chesapeake Bay inshore gillnet" fishery from 45 to 1,167; "NC inshore gillnet" fishery from 94 to 2,250; "Northeast anchored float gillnet" fishery from 133 to 662; "Northeast drift gillnet" fishery from unknown to 608; "Mid-Atlantic mid-water trawl" fishery from 620 to 546; "Mid-Atlantic bottom trawl" fishery from > 1,000 to 1,182; "Northeast mid-water trawl (including pair trawl) " fishery from 17 to 953; "Northeast bottom trawl" fishery from 1,052 to 1,635; "Atlantic blue crab trap/pot" fishery from > 16,000 to 6,479; "Atlantic mixed species trap/pot" fishery from unknown to 1,912; "Mid-Atlantic menhaden purse seine" fishery from 22 to 54; " fishery Mid-Atlantic haul/beach seine" fishery from 25 to 666; "NC long haul seine" fishery from 33 to 372; and "VA pound net" fishery from 41 to 52.

The estimated numbers of persons/vessels in the following Category III fisheries are updated: "U.S. Mid-Atlantic offshore surf clam and quahog dredge" fishery from 100 to unknown; "Gulf of Maine urchin dive, hand/mechanical collection" fishery from < 50 to unknown; "Gulf of Maine, U.S. Mid-Atlantic sea scallop dredge" fishery from 233 to 258; "Gulf of Maine mussel dredge" fishery from > 50 to unknown; "Gulf of Maine, U.S. Mid-Atlantic tuna/shark/swordfish hook & line/harpoon" fishery from 26,223 to > 403; "Northeast, Mid-Atlantic bottom longline/hook & line" fishery from 46 to 1,183; "U.S. Mid-Atlantic mixed species stop seine/weir/pound net" fishery from 751 to unknown; "Gulf of Maine herring and Atlantic mackerel stop seine/weir" fishery from 50 to unknown; "Gulf of Maine Atlantic herring purse seine" fishery from 30 to > 7; "Gulf of Maine menhaden purse seine" fishery from 50 to > 2; and "Atlantic shellfish bottom trawl" fishery from 972 to > 67.

List of Species or Stocks Incidentally Killed or Injured

West Indian manatee (Antillean subspecies) is removed from the list of species/stocks incidentally killed or

injured in the Category III "Caribbean gillnet" and "Caribbean haul/beach seine" fisheries.

Bottlenose dolphin (WNA offshore stock) is added to the list of species/stocks incidentally killed or injured in the Category II "Mid-Atlantic bottom trawl" fishery.

Atlantic spotted dolphin (Northern GMX stock) is added to the list of species/stocks incidentally killed or injured in the Category II "Southeastern U.S. Atlantic, Gulf of Mexico shrimp trawl" fishery.

Bottlenose dolphin (Northern NC estuarine system stock) is added to the list of species/stocks incidentally killed or injured in the Category III "U.S. Mid-Atlantic mixed species stop seine/weir/pound net (except the NC roe mullet stop net)" fishery.

The stock names for bottlenose dolphins incidentally killed or injured in all Category I, II, and III fisheries in the Atlantic are updated from "WNA coastal" to:

1. "Mid-Atlantic gillnet" fishery (Category I): Bottlenose dolphin, Northern Migratory coastal; bottlenose dolphin, Southern Migratory coastal; bottlenose dolphin, Northern NC estuarine system; bottlenose dolphin, Southern NC estuarine system. A superscript "1" is retained after each of these stocks in Table 2.

2. "NC inshore gillnet" fishery (Category II): Bottlenose dolphin, Northern NC estuarine system; bottlenose dolphin, Southern NC estuarine system. A superscript "1" is retained after each of these stocks in Table 2.

3. "Southeast Atlantic gillnet" fishery (Category II): Bottlenose dolphin, Southern Migratory coastal; bottlenose dolphin, SC coastal; bottlenose dolphin, GA coastal; bottlenose dolphin, Northern FL coastal; bottlenose dolphin, Central FL coastal. The superscript "2" is retained after the fishery in Table 2.

4. "Southeastern U.S. Atlantic shark gillnet" fishery (Category II): Bottlenose dolphin, Central FL coastal. A superscript "1" is retained after this stock in Table 2.

5. "Atlantic blue crab trap/pot" fishery (Category II): Bottlenose dolphin, Northern NC estuarine system; bottlenose dolphin, Southern NC estuarine system; bottlenose dolphin, Charleston estuarine system; bottlenose dolphin, Northern GA/Southern SC estuarine system; bottlenose dolphin, Southern GA estuarine system; bottlenose dolphin, Jacksonville estuarine system; bottlenose dolphin, Indian River Lagoon estuarine system; bottlenose dolphin, Northern Migratory coastal; bottlenose dolphin, Southern Migratory coastal; bottlenose dolphin, Northern FL coastal; bottlenose dolphin, Central FL coastal; bottlenose dolphin, SC coastal; bottlenose dolphin, GA coastal. A superscript "1" is retained after each of these stocks in Table 2.

6. "Mid-Atlantic menhaden purse seine" fishery (Category II): Bottlenose dolphin, Northern Migratory coastal; bottlenose dolphin, Southern Migratory coastal. The superscript "2" is retained after the fishery in Table 2.

7. "Mid-Atlantic haul/beach seine" fishery (Category II): Bottlenose dolphin, Northern NC estuarine system; bottlenose dolphin, Northern Migratory coastal; bottlenose dolphin, Southern Migratory coastal. A superscript "1" is retained after each of these stocks in Table 2.

8. "NC long haul seine" fishery (Category II): Bottlenose dolphin, Northern NC estuarine system. A superscript "1" is retained after this stock in Table 2.

9. "NC roe mullet stop net" fishery (Category II): Bottlenose dolphin, Southern NC estuarine system. A superscript "1" is retained after this stock in Table 2.

10. "VA pound net" fishery (Category II): Bottlenose dolphin, Northern Migratory coastal; Bottlenose dolphin, Southern Migratory coastal. A superscript "1" is retained after each of these stocks in Table 2.

11. "Southeastern U.S. Atlantic, Gulf of Mexico shrimp trawl" fishery (proposed to be elevated to Category II in this proposed rule): Bottlenose dolphin, SC coastal; bottlenose dolphin, GA coastal. A superscript "1" is retained after each of these stocks in Table 2.

12. "FL spiny lobster trap/pot" fishery (Category III): Bottlenose dolphin, Biscayne Bay estuarine; bottlenose dolphin, FL Bay estuarine.

13. "Southeastern U.S. Atlantic, Gulf of Mexico stone crab trap/pot" fishery (Category III): Bottlenose dolphin, Biscayne Bay estuarine.

14. "Atlantic Ocean, Gulf of Mexico, Caribbean commercial passenger fishing vessel" fishery (Category III): Bottlenose dolphin, Southern NC estuarine system; bottlenose dolphin, Indian River Lagoon estuarine system; bottlenose dolphin, Biscayne Bay estuarine.

Commercial Fisheries on the High Seas

Fishery Classifications

The High Seas "Pacific highly migratory species drift gillnet" fishery is reclassified from Category I to Category III.

The High Seas "Pacific highly migratory species purse seine" fishery is reclassified from Category II and III. This fishery is an extension of the "CA tuna purse seine" fishery operation in U.S. waters (reclassified as Category III in this rule). NMFS inadvertently retained the high seas portion of this fishery as Category II in the proposed 2011 LOF. However, since the High Seas "Pacific highly migratory species purse seine" fishery is an extension of the fishery operating in U.S. waters, and not a separate fishery, it is classified on the LOF the same as the component of the fishery operating in the U.S. waters. In this case Category III.

Number of Vessels/Persons

The estimated number of HSFCA permits in the Category I High Seas Atlantic highly migratory species fishery is updated for the following gear types: Longline from 72 to 77.

The estimated number of HSFCA permits in the Category II High Seas Atlantic highly migratory species is updated for the following gear types: Handline/pole and line from 1 to 2; and trawl from 2 to 3.

The estimated number of HSFCA permits in the Category II High Seas Pacific highly migratory species fishery is updated for the following gear types: Drift gillnet from 4 to 3; longline from 62 to 75; handline/pole and line from 22 to 25; trawl from 3 to 2; and troll from 249 to 271.

The estimated number of HSFCA permits in the Category II High Seas South Pacific Albacore Troll fishery is updated for the following gear types: Troll from 53 to 59.

The estimated number of HSFCA permits in the Category II High Seas South Pacific Tuna fishery is updated for the following gear types: Longline from 3 to 8; and purse seine from 36 to 35.

The estimated number of HSFCA permits in the Category I High Seas Western Pacific Pelagic fishery for the following gear types: Deep-set longline from 129 to 127.

The estimated number of HSFCA permits in the Category II High Seas Western Pacific pelagic fishery for the following gear types: Handline/pole and line from 9 to 10; trawl from 4 to 3; and troll from 44 to 40.

List of Species or Stocks Incidentally Killed or Injured

False killer whale (HI pelagic stock) is added to the list of species/stocks incidentally killed or injured in the Category I "Western Pacific pelagic longline (Deep-set component)" fishery.

The stock of pantropical spotted dolphin incidentally killed or injured in the Category I "Western Pacific pelagic longline (Deep-set component)" fishery

is changed from "stock unknown" to "HI stock."

The stock of bottlenose dolphin incidentally killed or injured in the Category I "Western Pacific pelagic longline (Deep-set component)" fishery is changed from "HI" to "HI Pelagic stock."

Striped dolphin (HI stock) and *Kogia* spp. whale (HI stock) are added to the list of species/stocks incidentally killed or injured in the Category II "Western Pacific pelagic longline (Shallow-set component)" fishery.

The stock of bottlenose dolphin incidentally killed or injured in the Category II "Western Pacific pelagic longline (Shallow-set component)" fishery is changed from "stock unknown" to "HI Pelagic stock."

The stock of Bryde's whale incidentally killed or injured in the Category II "Western Pacific pelagic longline (Shallow-set component)" fishery is changed from "stock unknown" to "HI stock."

The stock of Risso's dolphin incidentally killed or injured in the Category II "Western Pacific pelagic longline (Shallow-set component)" fishery is changed from "stock unknown" to "HI stock."

Sperm whale (stock unknown) is removed from the list of species/stocks incidentally killed or injured in the Category II High Seas "Western Pacific pelagic longline (Shallow-set component)" fishery.

Short-finned pilot whale (CA/OR/WA) is removed from the list of species/stocks incidentally killed or injured in the Category III "Pacific highly migratory species drift gillnet" fishery.

List of Fisheries

The following tables set forth the final list of U.S. commercial fisheries according to their classification under section 118 of the MMPA. In Tables 1 and 2, the estimated number of vessels/participants participating in fisheries operating within U.S. waters is expressed in terms of the number of active participants in the fishery, when possible. If this information is not available, the estimated number of vessels or persons licensed for a particular fishery is provided. If no recent information is available on the number of participants, vessels, or persons licensed in a fishery, then the number from the most recent LOF is used for the estimated number of vessels/persons in the fishery. NMFS acknowledges that, in some cases, these estimations may be inflations of actual effort; however, they represent the potential effort for each fishery, given the multiple gear types several state permits may allow for. Changes made to New England and Mid-Atlantic fishery participants listed in Table 2 in this final rule will not affect observer coverage or bycatch estimates as observer coverage and bycatch estimates are based on vessel trip reports and landings data. Table 1 and 2 serve to provide a description of the fishery's potential effort (state and Federal) in the LOF. If NMFS is able to extract more accurate information on the gear types used by state permit holders in the future, the numbers will be corrected to reflect this change. For additional information on fishing effort in fisheries found on Table 1 or 2, NMFS refers the reader to contact the relevant regional office (contact information included above in **SUPPLEMENTARY INFORMATION**).

For high seas fisheries, Table 3 lists the number of currently valid HSFCA permits held. Although this likely overestimates the number of active participants in many of these fisheries, the number of valid HSFCA permits is the most reliable data on the potential effort at this time.

Tables 1, 2, and 3 also list the marine mammal species/stocks incidentally killed or injured in each fishery based on observer data, logbook data, stranding reports, disentanglement network data, and MMAP reports. This list includes all species or stocks known to be injured or killed in a given fishery, but also includes species or stocks for which there are anecdotal records of an injury or mortality. Additionally, species identified by logbook entries may not be verified. In Tables 1 and 2, NMFS has designated those stocks driving a fishery's classification (*i.e.,* the fishery is classified based on serious injuries and mortalities of a marine mammal stock that are greater than 50 percent [Category I], or greater than 1 percent and less than 50 percent [Category II], of a stock's PBR) by a "1"after the stock's name.

In Tables 1 and 2, there are several fisheries classified in Category II that have no recent documented injuries or mortalities of marine mammals, or fisheries that did not result in a serious injury or mortality rate greater than 1 percent of a stock's PBR level. NMFS has classified these fisheries by analogy to other Category I or II fisheries that operate similar gear types that are known to cause mortality or serious injury of marine mammals, as discussed in the final LOF for 1996 (60 FR 67063, December 28, 1995), and according to factors listed in the definition of a "Category II fishery" in 50 CFR 229.2. NMFS has designated those fisheries listed by analogy in Tables 1 and 2 by a "2" after the fishery's name.

There are several fisheries in Tables 1, 2, and 3 in which a portion of the fishing vessels cross the EEZ boundary, and therefore operate both within U.S. waters and on the high seas. NMFS has designated those fisheries in each Table by a "*" after the fishery's name.

Table 1 lists commercial fisheries in the Pacific Ocean (including Alaska); Table 2 lists commercial fisheries in the Atlantic Ocean, Gulf of Mexico, and Caribbean; Table 3 lists commercial fisheries on the High Seas; and Table 4 lists fisheries affected by Take Reduction Plans or Teams.

BILLING CODE 3510–22–P

Table 1 - List of Fisheries -- Commercial Fisheries in the Pacific Ocean

Fishery Description	Estimated # of vessels/ persons	Marine mammal species and stocks incidentally killed or injured
CATEGORY I		
LONGLINE/SET LINE FISHERIES:		
HI deep-set (tuna target) longline/set line *	127	Blainville's beaked whale, HI Bottlenose dolphin, HI Pelagic False killer whale, HI Insular[1] False killer whale, HI Pelagic[1] False killer whale, Palmyra Atoll Humpback whale, Central North Pacific Pantropical spotted dolphin, HI Risso's dolphin, HI Short-finned pilot whale, HI Striped dolphin, HI
CATEGORY II		
GILLNET FISHERIES:		
CA halibut/white seabass and other species set gillnet (>3.5 in mesh)	50	California sea lion, U.S. Harbor seal, CA Humpback whale, CA/OR/WA[1] Long-beaked common dolphin, CA Northern elephant seal, CA breeding Sea otter, CA Short-beaked common dolphin, CA/OR/WA
CA yellowtail, barracuda, and white seabass drift gillnet (mesh size ≥3.5 in and <14 in) [2]	30	California sea lion, U.S. Long-beaked common dolphin, CA Short-beaked common dolphin, CA/OR/WA
AK Bristol Bay salmon drift gillnet[2]	1,862	Beluga whale, Bristol Bay Gray whale, Eastern North Pacific Harbor seal, Bering Sea Northern fur seal, Eastern Pacific Pacific white-sided dolphin, North Pacific Spotted seal, AK Steller sea lion, Western U.S.
AK Bristol Bay salmon set gillnet[2]	983	Beluga whale, Bristol Bay Gray whale, Eastern North Pacific Harbor seal, Bering Sea Northern fur seal, Eastern Pacific Spotted seal, AK
AK Kodiak salmon set gillnet	188	Harbor porpoise, GOA[1] Harbor seal, GOA Sea otter, Southwest AK Steller sea lion, Western U.S.

Fishery Description	Estimated # of vessels/ persons	Marine mammal species and stocks incidentally killed or injured
AK Cook Inlet salmon set gillnet	738	Beluga whale, Cook Inlet Dall's porpoise, AK Harbor porpoise, GOA Harbor seal, GOA Humpback whale, Central North Pacific[1] Steller sea lion, Western U.S.
AK Cook Inlet salmon drift gillnet	571	Beluga whale, Cook Inlet Dall's porpoise, AK Harbor porpoise, GOA[1] Harbor seal, GOA Steller sea lion, Western U.S.
AK Peninsula/Aleutian Islands salmon drift gillnet[2]	162	Dall's porpoise, AK Harbor porpoise, GOA Harbor seal, GOA Northern fur seal, Eastern Pacific
AK Peninsula/Aleutian Islands salmon set gillnet[2]	115	Harbor porpoise, Bering Sea Steller sea lion, Western U.S.
AK Prince William Sound salmon drift gillnet	537	Dall's porpoise, AK Harbor porpoise, GOA[1] Harbor seal, GOA Northern fur seal, Eastern Pacific Pacific white-sided dolphin, North Pacific Sea otter, South Central AK Steller sea lion, Western U.S.[1]
AK Southeast salmon drift gillnet	476	Dall's porpoise, AK Harbor porpoise, Southeast AK Harbor seal, Southeast AK Humpback whale, Central North Pacific[1] Pacific white-sided dolphin, North Pacific Steller sea lion, Eastern U.S.
AK Yakutat salmon set gillnet[2]	166	Gray whale, Eastern North Pacific Harbor seal, Southeast AK Humpback whale, Central North Pacific (Southeast AK)
WA Puget Sound Region salmon drift gillnet (includes all inland waters south of US-Canada border and eastward of the Bonilla-Tatoosh line-Treaty Indian fishing is excluded)	210	Dall's porpoise, CA/OR/WA Harbor porpoise, inland WA[1] Harbor seal, WA inland
PURSE SEINE FISHERIES:		
AK Cook Inlet salmon purse seine	82	Humpback whale, Central North Pacific[1]
AK Kodiak salmon purse seine	370	Humpback whale, Central North Pacific[1]
TRAWL FISHERIES:		

Fishery Description	Estimated # of vessels/ persons	Marine mammal species and stocks incidentally killed or injured
AK Bering Sea, Aleutian Islands flatfish trawl	34	Bearded seal, AK Harbor porpoise, Bering Sea Harbor seal, Bering Sea Killer whale, AK resident[1] Northern fur seal, Eastern Pacific Spotted seal, AK Steller sea lion, Western U.S.[1] Walrus, AK
AK Bering Sea, Aleutian Islands pollock trawl	95	Dall's porpoise, AK Harbor seal, AK Humpback whale, Central North Pacific Humpback whale, Western North Pacific Killer whale, Eastern North Pacific, GOA, Aleutian Islands, and Bering Sea transient[1] Minke whale, AK Ribbon seal, AK Spotted seal, AK Steller sea lion, Western U.S.[1]
POT, RING NET, AND TRAP FISHERIES:		
AK Bering Sea sablefish pot	6	Humpback whale, Central North Pacific[1] Humpback whale, Western North Pacific[1]
CA spot prawn pot	27	Gray whale, Eastern North Pacific Humpback whale, CA/OR/WA[1]
CA Dungeness crab pot	534	Gray whale, Eastern North Pacific Humpback whale, CA/OR/WA[1]
OR Dungeness crab pot	433	Gray whale, Eastern North Pacific Humpback whale, CA/OR/WA[1]
WA/OR/CA sablefish pot	309	Humpback whale, CA/OR/WA[1]
WA coastal Dungeness crab pot/trap	228	Gray whale, Eastern North Pacific Humpback whale, CA/OR/WA[1]
LONGLINE/SET LINE FISHERIES:		
HI shallow-set (swordfish target) longline/ set line *	28	Bottlenose dolphin, HI Pelagic[1] Bryde's whale, HI False killer whale, HI Pelagic Humpback whale, Central North Pacific Kogia sp. whale (Pygmy or dwarf sperm whale), HI Risso's dolphin, HI Striped dolphin, HI
American Samoa longline[2]	60	False killer whale, American Samoa Rough-toothed dolphin, American Samoa
HI shortline[2]	21	None documented

Fishery Description	Estimated # of vessels/ persons	Marine mammal species and stocks incidentally killed or injured
AK Bering Sea, Aleutian Islands Pacific cod longline	54	Killer whale, AK resident[1] Ribbon seal, AK Steller sea lion, Western U.S.
CATEGORY III		
GILLNET FISHERIES:		
AK Kuskokwim, Yukon, Norton Sound, Kotzebue salmon gillnet	824	Harbor porpoise, Bering Sea
AK miscellaneous finfish set gillnet	3	Steller sea lion, Western U.S.
AK Prince William Sound salmon set gillnet	30	Harbor seal, GOA Steller sea lion, Western U.S.
AK roe herring and food/bait herring gillnet	986	None documented
CA set gillnet (mesh size <3.5 in)	304	None documented
CA thresher shark/swordfish drift gillnet (≥14 in mesh) *	45	California sea lion, U.S. Long-beaked common dolphin, CA Northern elephant seal, CA breeding Northern right-whale dolphin, CA/OR/WA Pacific white-sided dolphin, CA/OR/WA Risso's dolphin, CA/OR/WA Short-beaked common dolphin, CA/OR/WA
HI inshore gillnet	39	Bottlenose dolphin, HI Spinner dolphin, HI
WA Grays Harbor salmon drift gillnet (excluding treaty Tribal fishing)	24	Harbor seal, OR/WA coast
WA/OR herring, smelt, shad, sturgeon, bottom fish, mullet, perch, rockfish gillnet	913	None documented
WA/OR lower Columbia River (includes tributaries) drift gillnet	110	California sea lion, U.S. Harbor seal, OR/WA coast
WA Willapa Bay drift gillnet	82	Harbor seal, OR/WA coast Northern elephant seal, CA breeding
PURSE SEINE, BEACH SEINE, ROUND HAUL, THROW NET AND TANGLE NET FISHERIES:		
AK Southeast salmon purse seine	415	None documented in the most recent 5 years of data
AK Metlakatla salmon purse seine	10	None documented
AK miscellaneous finfish beach seine	1	None documented
AK miscellaneous finfish purse seine	0	None documented

Fishery Description	Estimated # of vessels/ persons	Marine mammal species and stocks incidentally killed or injured
AK octopus/squid purse seine	0	None documented
AK roe herring and food/bait herring beach seine	4	None documented
AK roe herring and food/bait herring purse seine	361	None documented
AK salmon beach seine	31	None documented
AK salmon purse seine (excluding salmon purse seine fisheries listed as Category II)	936	Harbor seal, GOA
CA anchovy, mackerel, sardine purse seine	65	California sea lion, U.S. Harbor seal, CA
CA squid purse seine	80	Long-beaked common dolphin, CA Short-beaked common dolphin, CA/OR/WA
CA tuna purse seine *	10	None documented
WA/OR sardine purse seine	42	None documented
WA (all species) beach seine or drag seine	235	None documented
WA/OR herring, smelt, squid purse seine or lampara	130	None documented
WA salmon purse seine	440	None documented
WA salmon reef net	53	None documented
HI opelu/akule net	20	None documented
HI inshore purse seine	8	None documented
HI throw net, cast net	28	None documented
HI hukilau net	36	None documented
HI lobster tangle net	2	None documented
DIP NET FISHERIES:		
CA squid dip net	115	None documented
WA/OR smelt, herring dip net	119	None documented
MARINE AQUACULTURE FISHERIES:		
CA marine shellfish aquaculture	unknown	None documented
CA salmon enhancement rearing pen	>1	None documented

Fishery Description	Estimated # of vessels/ persons	Marine mammal species and stocks incidentally killed or injured
CA white seabass enhancement net pens	13	California sea lion, U.S.
HI offshore pen culture	2	None documented
OR salmon ranch	1	None documented
WA/OR salmon net pens	14	California sea lion, U.S. Harbor seal, WA inland waters
TROLL FISHERIES:		
AK North Pacific halibut, AK bottom fish, WA/OR/CA albacore, groundfish, bottom fish, CA halibut non-salmonid troll fisheries *	1,302 (102 AK)	None documented
AK salmon troll	2,045	Steller sea lion, Eastern U.S. Steller sea lion, Western U.S.
American Samoa tuna troll	<50	None documented
CA/OR/WA salmon troll	4,300	None documented
Commonwealth of the Northern Mariana Islands tuna troll	88	None documented
Guam tuna troll	401	None documented
HI trolling, rod and reel	2,210	None documented
LONGLINE/SET LINE FISHERIES:		
AK Bering Sea, Aleutian Islands Greenland turbot longline	29	Killer whale, AK resident
AK Bering Sea, Aleutian Islands rockfish longline	0	None documented
AK Bering Sea, Aleutian Islands sablefish longline	28	None documented
AK Gulf of Alaska halibut longline	1,302	None documented
AK Gulf of Alaska Pacific cod longline	440	None documented
AK Gulf of Alaska rockfish longline	0	None documented
AK Gulf of Alaska sablefish longline	291	Sperm whale, North Pacific Steller sea lion, Eastern U.S.
AK halibut longline/set line (State and Federal waters)	2,521	Steller sea lion, Western U.S.

Fishery Description	Estimated # of vessels/ persons	Marine mammal species and stocks incidentally killed or injured
AK octopus/squid longline	2	None documented
AK State-managed waters longline/setline (including sablefish, rockfish, lingcod, and miscellaneous finfish)	1,448	None documented
WA/OR/CA groundfish, bottomfish longline/set line	367	None documented
WA/OR North Pacific halibut longline/set line	350	None documented
CA pelagic longline	6	None documented in the most recent 5 years of data
HI kaka line	28	None documented
HI vertical longline	18	None documented
TRAWL FISHERIES:		
AK Bering Sea, Aleutian Islands Atka mackerel trawl	9	Steller sea lion, Western U.S.
AK Bering Sea, Aleutian Islands Pacific cod trawl	93	Harbor seal, Bering Sea Steller sea lion, Western U.S.
AK Bering Sea, Aleutian Islands rockfish trawl	10	None documented
AK Gulf of Alaska flatfish trawl	41	None documented
AK Gulf of Alaska Pacific cod trawl	62	Steller sea lion, Western U.S.
AK Gulf of Alaska pollock trawl	62	Fin whale, Northeast Pacific Northern elephant seal, North Pacific Steller sea lion, Western U.S.
AK Gulf of Alaska rockfish trawl	34	None documented
AK food/bait herring trawl	4	None documented
AK miscellaneous finfish otter / beam trawl	317	None documented
AK shrimp otter trawl and beam trawl (statewide and Cook Inlet)	32	None documented
AK State-managed waters of Cook Inlet, Kachemak Bay, Prince William Sound, Southeast AK groundfish trawl	2	None documented
CA halibut bottom trawl	53	None documented
WA/OR/CA shrimp trawl	300	None documented

Fishery Description	Estimated # of vessels/ persons	Marine mammal species and stocks incidentally killed or injured
WA/OR/CA groundfish trawl	160-180	California sea lion, U.S. Dall's porpoise, CA/OR/WA Harbor seal, OR/WA coast Northern fur seal, Eastern Pacific Pacific white-sided dolphin, CA/OR/WA Steller sea lion, Eastern U.S.
POT, RING NET, AND TRAP FISHERIES:		
AK statewide miscellaneous finfish pot	293	None documented
AK Aleutian Islands sablefish pot	8	None documented
AK Bering Sea, Aleutian Islands Pacific cod pot	68	None documented
AK Bering Sea, Aleutian Islands crab pot	297	None documented
AK Gulf of Alaska crab pot	300	None documented
AK Gulf of Alaska Pacific cod pot	154	Harbor seal, GOA
AK Southeast Alaska crab pot	433	Humpback whale, Central North Pacific (Southeast AK)
AK Southeast Alaska shrimp pot	283	Humpback whale, Central North Pacific (Southeast AK)
AK shrimp pot, except Southeast	15	None documented
AK octopus/squid pot	27	None documented
AK snail pot	1	None documented
CA coonstripe shrimp, rock crab, tanner crab pot or trap	305	Gray whale, Eastern North Pacific Harbor seal, CA
CA spiny lobster	225	Gray whale, Eastern North Pacific
OR/CA hagfish pot or trap	54	None documented
WA/OR shrimp pot/trap	254	None documented
WA Puget Sound Dungeness crab pot/trap	249	None documented
HI crab trap	9	None documented
HI fish trap	11	None documented
HI lobster trap	3	Hawaiian monk seal
HI shrimp trap	1	None documented
HI crab net	8	None documented

Fishery Description	Estimated # of vessels/ persons	Marine mammal species and stocks incidentally killed or injured
HI Kona crab loop net	41	None documented
HANDLINE AND JIG FISHERIES:		
AK miscellaneous finfish handline/hand troll and mechanical jig	445	None documented
AK North Pacific halibut handline/hand troll and mechanical jig	228	None documented
AK octopus/squid handline	0	None documented
American Samoa bottomfish	<50	None documented
Commonwealth of the Northern Mariana Islands bottomfish	<50	None documented
Guam bottomfish	200	None documented
HI aku boat, pole, and line	6	None documented
HI Main Hawaiian Islands deep-sea bottomfish handline	580	Hawaiian monk seal
HI inshore handline	460	None documented
HI tuna handline	531	None documented
WA groundfish, bottomfish jig	679	None documented
Western Pacific squid jig	6	None documented
HARPOON FISHERIES:		
CA swordfish harpoon	30	None documented
POUND NET/WEIR FISHERIES:		
AK herring spawn on kelp pound net	415	None documented
AK Southeast herring roe/food/bait pound net	6	None documented
WA herring brush weir	1	None documented
HI bullpen trap	4	None documented
BAIT PENS:		
WA/OR/CA bait pens	13	California sea lion, U.S.
DREDGE FISHERIES:		
Coastwide scallop dredge	108 (12 AK)	None documented

Fishery Description	Estimated # of vessels/ persons	Marine mammal species and stocks incidentally killed or injured
DIVE, HAND/MECHANICAL COLLECTION FISHERIES:		
AK abalone	0	None documented
AK clam	156	None documented
WA herring spawn on kelp	4	None documented
AK Dungeness crab	2	None documented
AK herring spawn on kelp	266	None documented
AK urchin and other fish/shellfish	570	None documented
CA abalone	0	None documented
CA sea urchin	583	None documented
HI black coral diving	1	None documented
HI fish pond	N/A	None documented
HI handpick	53	None documented
HI lobster diving	36	None documented
HI spearfishing	163	None documented
WA/CA kelp	4	None documented
WA/OR sea urchin, other clam, octopus, oyster, sea cucumber, scallop, ghost shrimp hand, dive, or mechanical collection	637	None documented
WA shellfish aquaculture	684	None documented
COMMERCIAL PASSENGER FISHING VESSEL (CHARTER BOAT) FISHERIES:		
AK/WA/OR/CA commercial passenger fishing vessel	>7,000 (2,702 AK)	Killer whale, stock unknown Steller sea lion, Eastern U.S. Steller sea lion, Western U.S.
HI charter vessel	114	None documented
LIVE FINFISH/SHELLFISH FISHERIES:		
CA nearshore finfish live trap/hook-and-line	93	None documented

List of Abbreviations and Symbols Used in Table 1: AK - Alaska; CA - California; GOA - Gulf of Alaska; HI - Hawaii; OR - Oregon; WA - Washington; [1] Fishery classified based on serious injuries and mortalities of this stock, which are greater than 50 percent (Category I) or greater than 1 percent and less than 50 percent (Category II) of the stock's PBR; [2] Fishery classified by analogy; * Fishery has an associated high seas component listed in Table 3.

Table 2 - List of Fisheries -- Commercial Fisheries in the Atlantic Ocean, Gulf of Mexico, and Caribbean

Fishery Description	Estimated # of vessels/ persons	Marine mammal species and stocks incidentally killed or injured
CATEGORY I		
GILLNET FISHERIES:		
Mid-Atlantic gillnet	5,495	Bottlenose dolphin, Northern Migratory coastal[1] Bottlenose dolphin, Southern Migratory coastal[1] Bottlenose dolphin, Northern NC estuarine system[1] Bottlenose dolphin, Southern NC estuarine system[1] Bottlenose dolphin, WNA offshore Common dolphin, WNA Gray seal, WNA Harbor porpoise, GME/BF Harbor seal, WNA Harp seal, WNA Humpback whale, Gulf of Maine Long-finned pilot whale, WNA Minke whale, Canadian east coast Short-finned pilot whale, WNA White-sided dolphin, WNA
Northeast sink gillnet	7,712	Bottlenose dolphin, WNA offshore Common dolphin, WNA Fin whale, WNA Gray seal, WNA Harbor porpoise, GME/BF[1] Harbor seal, WNA Harp seal, WNA Hooded seal, WNA Humpback whale, Gulf of Maine Minke whale, Canadian east coast North Atlantic right whale, WNA Risso's dolphin, WNA White-sided dolphin, WNA
TRAP/POT FISHERIES:		
Northeast/Mid-Atlantic American lobster trap/pot	12,489	Harbor seal, WNA Humpback whale, Gulf of Maine Minke whale, Canadian east coast North Atlantic right whale, WNA[1]

Fishery Description	Estimated # of vessels/ persons	Marine mammal species and stocks incidentally killed or injured
LONGLINE FISHERIES:		
Atlantic Ocean, Caribbean, Gulf of Mexico large pelagics longline *	94	Atlantic spotted dolphin, Northern GMX Atlantic spotted dolphin, WNA Bottlenose dolphin, Northern GMX oceanic Bottlenose dolphin, Northern GMX continental shelf Bottlenose dolphin, WNA offshore Common dolphin, WNA Cuvier's beaked whale, WNA Long-finned pilot whale, WNA[1] Mesoplodon beaked whale, WNA Northern bottlenose whale, WNA Pantropical spotted dolphin, Northern GMX Pantropical spotted dolphin, WNA Risso's dolphin, Northern GMX Risso's dolphin, WNA Short-finned pilot whale, Northern GMX Short-finned pilot whale, WNA[1]
CATEGORY II		
GILLNET FISHERIES:		
Chesapeake Bay inshore gillnet[2]	1,167	None documented in the most recent 5 years of data
Gulf of Mexico gillnet[2]	724	Bottlenose dolphin, Eastern GMX coastal Bottlenose dolphin, GMX bay, sound, and estuarine Bottlenose dolphin, Northern GMX coastal Bottlenose dolphin, Western GMX Coastal
NC inshore gillnet	2,250	Bottlenose dolphin, Northern NC estuarine system[1] Bottlenose dolphin, Southern NC estuarine system[1]
Northeast anchored float gillnet[2]	662	Harbor seal, WNA Humpback whale, Gulf of Maine White-sided dolphin, WNA
Northeast drift gillnet[2]	608	None documented
Southeast Atlantic gillnet[2]	779	Bottlenose dolphin, Southern Migratory coastal Bottlenose dolphin, GA coastal Bottlenose dolphin, Central FL coastal Bottlenose dolphin, Northern FL coastal Bottlenose dolphin, SC coastal
Southeastern U.S. Atlantic shark gillnet	30	Atlantic spotted dolphin, WNA Bottlenose dolphin, Central FL coastal[1] North Atlantic right whale, WNA
TRAWL FISHERIES:		

Fishery Description	Estimated # of vessels/ persons	Marine mammal species and stocks incidentally killed or injured
Mid-Atlantic mid-water trawl (including pair trawl)	546	Bottlenose dolphin, WNA offshore Common dolphin, WNA Long-finned pilot whale, WNA Risso's dolphin, WNA Short-finned pilot whale, WNA White-sided dolphin, WNA[1]
Mid-Atlantic bottom trawl	1,182	Bottlenose dolphin, WNA offshore Common dolphin, WNA[1] Long-finned pilot whale, WNA[1] Short-finned pilot whale, WNA[1] White-sided dolphin, WNA
Northeast mid-water trawl (including pair trawl)	953	Harbor seal, WNA Long-finned pilot whale, WNA[1] Short-finned pilot whale, WNA[1] White-sided dolphin, WNA
Northeast bottom trawl	1,635	Common dolphin, WNA Harbor porpoise, GME/BF Harbor seal, WNA Harp seal, WNA Long-finned pilot whale, WNA Short-finned pilot whale, WNA White-sided dolphin, WNA[1]
Southeastern U.S. Atlantic, Gulf of Mexico shrimp trawl	4,950	Atlantic spotted dolphin, Northern GMX Bottlenose dolphin, GA coastal[1] Bottlenose dolphin, SC coastal[1] Bottlenose dolphin, Eastern GMX coastal[1] Bottlenose dolphin, Western GMX coastal[1] Bottlenose dolphin, GMX bay, sound, estuarine[1] West Indian manatee, FL
TRAP/POT FISHERIES:		
Atlantic blue crab trap/pot	6,479	Bottlenose dolphin, Charleston estuarine system[1] Bottlenose dolphin, Indian River Lagoon estuarine system[1] Bottlenose dolphin, Jacksonville estuarine system[1] Bottlenose dolphin, GA coastal[1] Bottlenose dolphin, Northern GA/Southern SC estuarine system[1] Bottlenose dolphin, Southern GA estuarine system[1] Bottlenose dolphin, Northern Migratory coastal[1] Bottlenose dolphin, Southern Migratory coastal[1] Bottlenose dolphin, Central FL coastal[1] Bottlenose dolphin, Northern FL coastal[1] Bottlenose dolphin, Northern NC estuarine system[1] Bottlenose dolphin, Southern NC estuarine system[1] Bottlenose dolphin, SC coastal[1] West Indian manatee, FL[1]

Fishery Description	Estimated # of vessels/ persons	Marine mammal species and stocks incidentally killed or injured
Atlantic mixed species trap/pot[2]	1,912	Fin whale, WNA Humpback whale, Gulf of Maine
PURSE SEINE FISHERIES:		
Gulf of Mexico menhaden purse seine	40-42	Bottlenose dolphin, Eastern GMX coastal Bottlenose dolphin, GMX bay, sound, estuarine Bottlenose dolphin, Northern GMX coastal[1] Bottlenose dolphin, Western GMX coastal[1]
Mid-Atlantic menhaden purse seine[2]	54	Bottlenose dolphin, Northern Migratory coastal Bottlenose dolphin, Southern Migratory coastal
HAUL/BEACH SEINE FISHERIES:		
Mid-Atlantic haul/beach seine	666	Bottlenose dolphin, Northern NC estuarine system[1] Bottlenose dolphin, Northern Migratory coastal[1] Bottlenose dolphin, Southern Migratory coastal[1]
NC long haul seine	372	Bottlenose dolphin, Northern NC estuarine system[1]
STOP NET FISHERIES:		
NC roe mullet stop net	13	Bottlenose dolphin, Southern NC estuarine system[1]
POUND NET FISHERIES:		
VA pound net	52	Bottlenose dolphin, Northern Migratory coastal[1] Bottlenose dolphin, Southern Migratory coastal[1]
CATEGORY III		
GILLNET FISHERIES:		
Caribbean gillnet	>991	Dwarf sperm whale, WNA
DE River inshore gillnet	60	None documented in the most recent 5 years of data
Long Island Sound inshore gillnet	20	None documented in the most recent 5 years of data
RI, southern MA (to Monomoy Island), and NY Bight (Raritan and Lower NY Bays) inshore gillnet	32	None documented in the most recent 5 years of data
Southeast Atlantic inshore gillnet	unknown	None documented
TRAWL FISHERIES:		
Atlantic shellfish bottom trawl	>67	None documented
Gulf of Mexico butterfish trawl	2	Bottlenose dolphin, Northern GMX oceanic Bottlenose dolphin, Northern GMX continental shelf

Fishery Description	Estimated # of vessels/ persons	Marine mammal species and stocks incidentally killed or injured
Gulf of Mexico mixed species trawl	20	None documented
GA cannonball jellyfish trawl	1	None documented
MARINE AQUACULTURE FISHERIES:		
Finfish aquaculture	48	Harbor seal, WNA
Shellfish aquaculture	unknown	None documented
PURSE SEINE FISHERIES:		
Gulf of Maine Atlantic herring purse seine	>7	Harbor seal, WNA Gray seal, WNA
Gulf of Maine menhaden purse seine	>2	None documented
FL West Coast sardine purse seine	10	Bottlenose dolphin, Eastern GMX coastal
U.S. Atlantic tuna purse seine *	5	Long-finned pilot whale, WNA Short-finned pilot whale, WNA
LONGLINE/HOOK-AND-LINE FISHERIES:		
Northeast/Mid-Atlantic bottom longline/hook-and-line	1,183	None documented in the most recent 5 years of data
Gulf of Maine, U.S. Mid-Atlantic tuna, shark swordfish hook-and-line/harpoon	>403	Humpback whale, Gulf of Maine
Southeastern U.S. Atlantic, Gulf of Mexico, and Caribbean snapper-grouper and other reef fish bottom longline/hook-and-line	>5,000	None documented
Southeastern U.S. Atlantic, Gulf of Mexico shark bottom longline/hook-and-line	<125	Bottlenose dolphin, Eastern GMX coastal Bottlenose dolphin, Northern GMX continental shelf
Southeastern U.S. Atlantic, Gulf of Mexico, and Caribbean pelagic hook-and-line/harpoon	1,446	None documented
U.S. Atlantic, Gulf of Mexico trotline	unknown	None documented
TRAP/POT FISHERIES		
Caribbean mixed species trap/pot	>501	None documented
Caribbean spiny lobster trap/pot	>197	None documented

Fishery Description	Estimated # of vessels/ persons	Marine mammal species and stocks incidentally killed or injured
FL spiny lobster trap/pot	2,145	Bottlenose dolphin, Biscayne Bay estuarine Bottlenose dolphin, Eastern GMX coastal Bottlenose dolphin, FL Bay estuarine
Gulf of Mexico blue crab trap/pot	4,113	Bottlenose dolphin, Western GMX coastal Bottlenose dolphin, Northern GMX coastal Bottlenose dolphin, Eastern GMX coastal Bottlenose dolphin, GMX bay, sound, & estuarine West Indian manatee, FL
Gulf of Mexico mixed species trap/pot	unknown	None documented
Southeastern U.S. Atlantic, Gulf of Mexico golden crab trap/pot	10	None documented
Southeastern U.S. Atlantic, Gulf of Mexico stone crab trap/pot	4,453	Bottlenose dolphin, Biscayne Bay estuarine
U.S. Mid-Atlantic eel trap/pot	>700	None documented
STOP SEINE/WEIR/POUND NET FISHERIES:		
Gulf of Maine herring and Atlantic mackerel stop seine/weir	unknown	Gray seal, Northwest North Atlantic Harbor porpoise, GME/BF Harbor seal, WNA Minke whale, Canadian East Coast White-sided dolphin, WNA
U.S. Mid-Atlantic crab stop seine/weir	2,600	None documented
U.S. Mid-Atlantic mixed species stop seine/weir/pound net (except the NC roe mullet stop net)	unknown	Bottlenose dolphin, Northern NC estuarine system
DREDGE FISHERIES:		
Gulf of Maine mussel dredge	unknown	None documented
Gulf of Maine, U.S. Mid-Atlantic sea scallop dredge	258	None documented
U.S. Mid-Atlantic/Gulf of Mexico oyster dredge	7,000	None documented
U.S. Mid-Atlantic offshore surf clam and quahog dredge	unknown	None documented
HAUL/BEACH SEINE FISHERIES:		
Caribbean haul/beach seine	15	None documented in the most recent 5 years of data
Gulf of Mexico haul/beach seine	unknown	None documented

Fishery Description	Estimated # of vessels/ persons	Marine mammal species and stocks incidentally killed or injured
Southeastern U.S. Atlantic haul/beach seine	25	None documented
DIVE, HAND/MECHANICAL COLLECTION FISHERIES:		
Atlantic Ocean, Gulf of Mexico, Caribbean shellfish dive, hand/mechanical collection	20,000	None documented
Gulf of Maine urchin dive, hand/mechanical collection	unknown	None documented
Gulf of Mexico, Southeast Atlantic, Mid-Atlantic, and Caribbean cast net	unknown	None documented
COMMERCIAL PASSENGER FISHING VESSEL (CHARTER BOAT) FISHERIES:		
Atlantic Ocean, Gulf of Mexico, Caribbean commercial passenger fishing vessel	4,000	Bottlenose dolphin, Eastern GMX coastal Bottlenose dolphin, Northern GMX coastal Bottlenose dolphin, Western GMX coastal Bottlenose dolphin, Biscayne Bay estuarine Bottlenose dolphin, Indian River Lagoon estuarine system Bottlenose dolphin, Southern NC estuarine system

List of Abbreviations and Symbols Used in Table 2: DE - Delaware; FL - Florida; GA - Georgia; GME/BF - Gulf of Maine/Bay of Fundy; GMX - Gulf of Mexico; MA - Massachusetts; NC - North Carolina; SC- South Carolina; VA - Virginia; WNA - Western North Atlantic; [1] Fishery classified based on serious injuries and mortalities of this stock, which are greater than 50 percent (Category I) or greater than 1 percent and less than 50 percent (Category II) of the stock's PBR; [2] Fishery classified by analogy; * Fishery has an associated high seas component listed in Table 3.

Table 3 - List of Fisheries -- Commercial Fisheries on the High Seas

Fishery Description	# of HSFCA permits	Marine mammal species and stocks incidentally killed or injured
Category I		
LONGLINE FISHERIES:		
Atlantic Highly Migratory Species * +	77	Atlantic spotted dolphin, WNA Bottlenose dolphin, Northern GMX oceanic Bottlenose dolphin, WNA offshore Common dolphin, WNA Cuvier's beaked whale, WNA Long-finned pilot whale, WNA Mesoplodon beaked whale, WNA Pygmy sperm whale, WNA Risso's dolphin, WNA Short-finned pilot whale, WNA
Western Pacific Pelagic (Deep-set component) * ^+	127	Blainville's beaked whale, HI Bottlenose dolphin, HI Pelagic False killer whale, HI Pelagic False killer whale, unknown Humpback whale, Central North Pacific Pantropical spotted dolphin, HI Risso's dolphin, HI Short-finned pilot whale, HI Striped dolphin, HI
Category II		
DRIFT GILLNET FISHERIES:		
Atlantic Highly Migratory Species	1	Undetermined
TRAWL FISHERIES:		
Atlantic Highly Migratory Species **	3	Undetermined
Pacific Highly Migratory Species **	2	Undetermined
CCAMLR	0	Antarctic fur seal
South Pacific Albacore Troll	2	Undetermined
Western Pacific Pelagic	3	Undetermined
PURSE SEINE FISHERIES:		
South Pacific Tuna Fisheries	35	Undetermined
Western Pacific Pelagic	3	Undetermined
POT VESSEL FISHERIES:		

Fishery Description	# of HSFCA permits	Marine mammal species and stocks incidentally killed or injured
Pacific Highly Migratory Species **	7	Undetermined
South Pacific Albacore Troll	5	Undetermined
Western Pacific Pelagic	7	Undetermined
LONGLINE FISHERIES:		
CCAMLR	0	None documented
Pacific Highly Migratory Species * +	75	Risso's dolphin, CA/OR/WA
South Pacific Albacore Troll	11	Undetermined
South Pacific Tuna Fisheries **	8	Undetermined
Western Pacific Pelagic (Shallow-set component) * ^+	28	Bottlenose dolphin, HI Pelagic Bryde's whale, HI Humpback whale, Central North Pacific Kogia sp. whale (Pygmy or dwarf sperm whale), HI Risso's dolphin, HI Striped dolphin, HI
HANDLINE/POLE AND LINE FISHERIES:		
Atlantic Highly Migratory Species	2	Undetermined
Pacific Highly Migratory Species	25	Undetermined
South Pacific Albacore Troll	8	Undetermined
Western Pacific Pelagic	10	Undetermined
TROLL FISHERIES:		
Atlantic Highly Migratory Species	7	Undetermined
South Pacific Albacore Troll	59	Undetermined
South Pacific Tuna Fisheries **	3	Undetermined
Western Pacific Pelagic	40	Undetermined
LINERS NEI FISHERIES:		
Pacific Highly Migratory Species **	1	Undetermined
South Pacific Albacore Troll	1	Undetermined
Western Pacific Pelagic	1	Undetermined
FACTORY MOTHERSHIP FISHERIES:		
Western Pacific Pelagic	1	Undetermined

Fishery Description	# of HSFCA permits	Marine mammal species and stocks incidentally killed or injured
MULTIPURPOSE VESSELS NEI FISHERIES:		
Atlantic Highly Migratory Species	1	Undetermined
Pacific Highly Migratory Species **	7	Undetermined
South Pacific Albacore Troll	4	Undetermined
Western Pacific Pelagic	5	Undetermined
Category III		
DRIFT GILLNET FISHERIES:		
Pacific Highly Migratory Species * ^	3	Long-beaked common dolphin, CA Northern right-whale dolphin, CA/OR/WA Pacific white-sided dolphin, CA/OR/WA Risso's dolphin, CA/OR/WA Short-beaked common dolphin, CA/OR/WA
PURSE SEINE FISHERIES		
Pacific Highly Migratory Species * ^	8	None documented
TROLL FISHERIES:		
Pacific Highly Migratory Species *	271	None documented

List of Terms, Abbreviations, and Symbols Used in Table 3:
GMX- Gulf of Mexico.
NEI - Not Elsewhere Identified.
WNA - Western North Atlantic.
* Fishery is an extension/component of an existing fishery operating within U.S. waters listed in Table 1 or 2. The number of permits listed in Table 3 represents only the number of permits for the high seas component of the fishery.
** These gear types are not authorized under the Pacific HMS FMP (2004), the Atlantic HMS FMP (2006), or without a South Pacific Tuna Treaty license (in the case of the South Pacific Tuna fisheries). Because HSFCA permits are valid for five years, permits obtained in past years exist in the HSFCA permit database for gear types that are now unauthorized. Therefore, while HSFCA permits exist for these gear types, it does not represent effort. In order to land fish species, fishers must be using an authorized gear type. Once these permits for unauthorized gear types expire, the permit-holder will be required to obtain a permit for an authorized gear type.
+ The marine mammal species or stock listed as killed or injured in this fishery has been observed taken by this fishery on the high seas.
^ The list of marine mammal species killed or injured in this fishery is identical to the list of marine mammal species killed or injured in U.S. waters component of the fishery, minus coastal stocks, because the marine mammal species are also found on the high seas and the fishery remains the same on both sides of the EEZ boundary. Therefore, the high seas components of these fisheries pose the same risk to marine mammals as the fisheries operating in U.S. waters.

Table 4 - Fisheries Affected by Take Reduction Teams and Plans

Take Reduction Plans	Affected Fisheries
Atlantic Large Whale Take Reduction Plan (ALWTRP) - 50 CFR 229.32	Category I Mid-Atlantic gillnet Northeast/Mid-Atlantic American lobster trap/pot Northeast sink gillnet Category II Atlantic blue crab trap/pot Atlantic mixed species trap/pot Northeast anchored float gillnet Northeast drift gillnet Southeast Atlantic gillnet Southeastern U.S. Atlantic shark gillnet*
Bottlenose Dolphin Take Reduction Plan (BDTRP) - 50 CFR 229.35	Category I Mid-Atlantic gillnet Category II Atlantic blue crab trap/pot Mid-Atlantic haul/beach seine NC inshore gillnet NC long haul seine NC roe mullet stop net Southeast Atlantic gillnet Southeastern U.S. Atlantic shark gillnet VA pound net
Harbor Porpoise Take Reduction Plan (HPTRP) - 50 CFR 229.33 (New England) and 229.34 (Mid-Atlantic)	Category I Mid-Atlantic gillnet Northeast sink gillnet
Pelagic Longline Take Reduction Plan (PLTRP) – 50 CFR 229.36	Category I Atlantic Ocean, Caribbean, Gulf of Mexico large pelagics longline
Pacific Offshore Cetacean Take Reduction Plan (POCTRP) - 50 CFR 229.31	Category III CA thresher shark/swordfish drift gillnet (≥14 in mesh)
Take Reduction Teams	Affected Fisheries
Atlantic Trawl Gear Take Reduction Team (ATGTRT)	Category II Mid-Atlantic bottom trawl Mid-Atlantic mid-water trawl (including pair trawl) Northeast bottom trawl Northeast mid-water trawl (including pair trawl)
False Killer Whale Take Reduction Team (FKWTRT)	Category I HI deep-set (tuna target) longline/set line Category II HI shallow-set (swordfish target) longline/set line

* Only applicable to the portion of the fishery operating in U.S. waters.
For a description of each Take Reduction Team and copies of Take Reduction Plans, access:
http://www.nmfs.noaa.gov/pr/interactions/trt/

BILLING CODE 3510–22–C

Classification

At the proposed rule stage for this action, the Chief Counsel for Regulation of the Department of Commerce certified to the Chief Counsel for Advocacy of the Small Business Administration that this rule would not have a significant economic impact on a substantial number of small entities. Therefore a Final Regulatory Flexibility Analysis was not required and none has been prepared. The factual basis leading to the certification is set forth below.

Under existing regulations, all individuals participating in Category I or II fisheries must register under the MMPA and obtain an Authorization Certificate. The Authorization Certificate authorizes the taking of non-endangered and non-threatened marine mammals incidental to commercial fishing operations. Additionally, individuals may be subject to a Take Reduction Plan (TRP) and requested to carry an observer. NMFS has estimated that approximately 72,000 fishing vessels, most of which are small entities, may operate in Category I or II fisheries, and therefore, are required to register with NMFS. The MMPA registration process is integrated with existing state and Federal licensing, permitting, and registration programs. Therefore, individuals who have a state or Federal fishing permit or landing license, or who are authorized through another related state or Federal fishery registration program, are currently not required to register separately under the MMPA or pay the $25 registration fee. Therefore, there are no direct costs to small entities under this final rule.

If a vessel is requested to carry an observer, individuals will not incur any direct economic costs associated with carrying that observer. Potential indirect costs to individuals required to take observers may include: Lost space on deck for catch, lost bunk space, and lost fishing time due to time needed to process bycatch data. For effective monitoring, however, observers will rotate among a limited number of vessels in a fishery at any given time and each vessel within an observed fishery has an equal probability of being requested to accommodate an observer. Therefore, the potential indirect costs to individuals are expected to be minimal because observer coverage would only be required for a small percentage of an individual's total annual fishing time. In addition, section 118 of the MMPA states that an observer will not be placed on a vessel if the facilities for quartering an observer or performing observer functions are inadequate or unsafe, thereby exempting vessels too small to accommodate an observer from this requirement. As a result of this certification, an initial regulatory flexibility analysis is not required and was not prepared. In the event that reclassification of a fishery to Category I or II results in a TRP, economic analyses of the effects of that plan would be summarized in subsequent rulemaking actions.

This final rule contains collection-of-information requirements subject to the Paperwork Reduction Act. The collection of information for the registration of individuals under the MMPA has been approved by the Office of Management and Budget (OMB) under OMB control number 0648–0293 (0.15 hours per report for new registrants and 0.09 hours per report for renewals). The requirement for reporting marine mammal injuries or mortalities has been approved by OMB under OMB control number 0648–0292 (0.15 hours per report). These estimates include the time for reviewing instructions, searching existing data sources, gathering and maintaining the data needed, and completing and reviewing the collection of information. Send comments regarding these reporting burden estimates or any other aspect of the collections of information, including suggestions for reducing burden, to NMFS and OMB (*see* **ADDRESSES** and **SUPPLEMENTARY INFORMATION**).

Notwithstanding any other provision of law, no person is required to respond to nor shall a person be subject to a penalty for failure to comply with a collection of information subject to the requirements of the Paperwork Reduction Act unless that collection of information displays a currently valid OMB control number.

This final rule has been determined to be not significant for the purposes of Executive Order 12866.

An environmental assessment (EA) was prepared under the National Environmental Policy Act (NEPA) for regulations to implement section 118 of the MMPA in June 1995. NMFS revised that EA relative to classifying U.S. commercial fisheries on the LOF in December 2005. Both the 1995 EA and the 2005 EA concluded that implementation of MMPA section 118 regulations would not have a significant impact on the human environment. This final rule would not make any significant change in the management of reclassified fisheries, and therefore, this final rule is not expected to change the analysis or conclusion of the 2005 EA. The Council of Environmental Quality (CEQ) recommends agencies review EAs every five years; therefore, NMFS reviewed the 2005 EA in 2009. NMFS concluded that, because there have been no changes to the process used to develop the LOF and implement section 118 of the MMPA (including no new alternatives and no additional or new impacts on the human environment), there is no need to update the 2005 EA at this time. If NMFS takes a management action, for example, through the development of a TRP, NMFS would first prepare an environmental document, as required under NEPA, specific to that action.

This final rule would not affect species listed as threatened or endangered under the Endangered Species Act (ESA) or their associated critical habitat. The impacts of numerous fisheries have been analyzed in various biological opinions, and this final rule will not affect the conclusions of those opinions. The classification of fisheries on the LOF is not considered to be a management action that would adversely affect threatened or endangered species. If NMFS takes a management action, for example, through the development of a TRP, NMFS would conduct consultation under ESA section 7 for that action.

This final rule would have no adverse impacts on marine mammals and may have a positive impact on marine mammals by improving knowledge of marine mammals and the fisheries interacting with marine mammals through information collected from observer programs, stranding and sighting data, or take reduction teams.

This final rule would not affect the land or water uses or natural resources of the coastal zone, as specified under section 307 of the Coastal Zone Management Act.

References

Baird, R.W., and A.M. Gorgone. 2005. False killer whale dorsal fin disfigurements as a possible indicator of long-line fishery interactions in Hawaiian waters. Pacific Science 59: 593–601.

Dated: November 1, 2010.

Samuel D. Rauch III,

Deputy Assistant Administrator for Regulatory Programs, National Marine Fisheries Service.

[FR Doc. 2010–28073 Filed 11–5–10; 8:45 am]

BILLING CODE 3510–22–P

Proposed Rules

Federal Register
Vol. 75, No. 215
Monday, November 8, 2010

This section of the FEDERAL REGISTER contains notices to the public of the proposed issuance of rules and regulations. The purpose of these notices is to give interested persons an opportunity to participate in the rule making prior to the adoption of the final rules.

DEPARTMENT OF AGRICULTURE

Agricultural Marketing Service

7 CFR Part 205

[Document Number AMS–NOP–10–0079; NOP–09–02PR]

RIN 0581–AD06

National Organic Program; Proposed Amendments to the National List of Allowed and Prohibited Substances (Crops and Processing)

AGENCY: Agricultural Marketing Service, USDA.

ACTION: Proposed rule.

SUMMARY: This proposed rule would amend the U.S. Department of Agriculture's (USDA) National List of Allowed and Prohibited Substances (National List) to reflect recommendations submitted to the Secretary of Agriculture (Secretary) by the National Organic Standards Board (NOSB) on May 22, 2008, November 19, 2008, and May 6, 2009. The recommendations addressed in this proposed rule pertain to establishing exemptions (uses) for four substances in organic crop production and organic processing, amending an annotation for one allowed substance, and removing an exemption for one allowed substance. Consistent with the recommendations from the NOSB, this proposed rule would add the following four substances, along with any restrictive annotations, to the National List: Microcrystalline cheesewax; acidified sodium chlorite; dried orange pulp; and Pacific kombu seaweed. This proposed rule would also amend the annotation for lecithin—unbleached, and remove lecithin—bleached, from the National List.

DATES: Comments must be received by January 7, 2011.

ADDRESSES: Interested persons may comment on this proposed rule using the following procedures:

- *Internet: http://www.regulations.gov.*
- *Mail:* Comments may be submitted by mail to: Toni Strother, Agricultural Marketing Specialist, National Organic Program, USDA–AMS–NOP, Room 2646–So., Ag Stop 0268, 1400 Independence Ave., SW., Washington, DC 20250–0268.

Written comments responding to this proposed rule should be identified with the document number AMS–NOP–10–0079; NOP–09–02. You should identify the topic and section number of this proposed rule to which your comment refers. You should clearly indicate whether or not you support the action being proposed for any or all of the substances in this proposed rule. You should clearly indicate the reason(s) for your position. You should also offer any recommended language changes that would be appropriate for your position. Please include relevant information and data to support your position, (*e.g.* scientific, environmental, manufacturing, industry impact information, *etc.*). Only relevant material supporting your position should be submitted.

It is USDA's intention to have all comments concerning this proposed rule, including names and addresses when provided, regardless of submission procedure used, available for viewing on the Regulations.gov (*http://www.regulations.gov*) Internet site. Comments submitted in response to this proposed rule will also be available for viewing in person at USDA–AMS, National Organic Program, Room 2646–South Building, 1400 Independence Ave., SW., Washington, DC, from 9 a.m. to 12 noon and from 1 p.m. to 4 p.m., Monday through Friday (except official Federal holidays). Persons wanting to visit the USDA South Building to view comments received in response to this proposed rule are requested to make an appointment in advance by calling (202) 720–3252.

FOR FURTHER INFORMATION CONTACT: Melissa Bailey, Director, Standards Division, Telephone: (202) 720–3252; Fax: (202) 205–7808.

SUPPLEMENTARY INFORMATION:

I. Background

On December 21, 2000, the Secretary established, within the National Organic Program (NOP) [7 CFR part 205], the National List regulations §§ 205.600 through 205.607. This National List identifies the synthetic substances that may be used and the nonsynthetic (natural) substances that may not be used in organic production. The National List also identifies synthetic, nonsynthetic nonagricultural and nonorganic agricultural substances that may be used in organic handling. The Organic Foods Production Act of 1990, as amended, (7 U.S.C. 6501 *et seq.*), (OFPA), and the NOP regulations, in § 205.105, specifically prohibit the use of any synthetic substance in organic production and handling unless the synthetic substance is on the National List. Section 205.105 also requires that any nonorganic agricultural and any nonsynthetic nonagricultural substance used in organic handling be on the National List.

Under the authority of the OFPA, the National List can be amended by the Secretary based on proposed amendments developed by the NOSB. Since established, the National List has been amended thirteen times, October 31, 2003 (68 FR 61987), November 3, 2003 (68 FR 62215), October 21, 2005 (70 FR 61217), June 7, 2006 (71 FR 32803), September 11, 2006 (71 FR 53299), June, 27, 2007 (72 FR 35137), October 16, 2007 (72 FR 58469), December 10, 2007 (72 FR 69569), December 12, 2007 (72 FR 70479), September 18, 2008 (73 FR 54057), October 9, 2008 (73 FR 59479), July 6, 2010 (75 FR 38693), and August 24, 2010 (75 FR 51919).

This proposed rule would amend the National List to reflect six recommendations submitted to the Secretary by the NOSB on May 22, 2008, November 19, 2008, and May 6, 2009. Based upon their evaluation of petitions submitted by industry participants, the NOSB recommended that the Secretary add one substance (microcrystalline cheesewax (CAS #s 64742–42–3, 8009–03–08, and 8002–74–2)) for organic crop production to § 205.601, one substance (acidified sodium chlorite) for organic processing to § 205.605(b), and two substances (orange pulp, dried, and Pacific kombu seaweed) for organic processing to § 205.606 of the National List. This proposed rule would amend § 205.605(b) of the National List by removing one substance (lecithin—bleached). This proposed rule would also amend § 205.606 of the National List by amending one listing (lecithin—unbleached). The exemptions for use of each substance in organic production

were evaluated by the NOSB using the evaluation criteria specified in OFPA (7 U.S.C. §§ 6517–6518). In addition, the amendment of one substance and removal of one substance were also evaluated by the NOSB using NOP criteria on commercial availability (72 FR 2167).

II. Overview of Proposed Amendments

The following provides an overview of the proposed amendments to designated sections of the National List regulations:

Section 205.601 Synthetic Substances Allowed for Use in Organic Crop Production

This proposed rule would amend § 205.601 of the National List regulations by: Designating paragraph (o) for the purpose of adding the following substance as a production aid: Microcrystalline cheesewax (CAS #s 64742–42–3, 8009–03–08, and 8002–74–2). A petition to add microcrystalline cheesewax for use in organic crop production as a production aid in log grown mushroom culture was submitted in January 2007. Microcrystalline cheesewax is a colorless solid which is heated to its melting point and applied with a brush to inoculation sites on the mushroom production logs. This substance acts as a moisture barrier and is temporarily used to limit moisture loss from mushroom spawn inoculums and airborne contaminants from colonizing on the inoculation sites. On May 21, 2008, the NOSB recommended adding a blended form of microcrystalline cheesewax to the National List. This blended form is comprised of three synthetically-derived substances: Clay-treated microcrystalline wax (CAS # 64742–42–3), petrolatum (CAS # 8009–03–08), and paraffin wax (CAS # 8002–74–2). Clay-treated microcrystalline wax, petrolatum and paraffin waxes range from solid to semi-solid state at room temperature, depending on the oil content. These three components are recovered from crude oil through a series of crystallization, filtration, solidification, and solvent extraction steps. According to the petition, all of the solvent is recovered during the extraction process and none of the solvent remains in the final product. These substances are then decolored, deodorized, blended, and a synthetic antioxidant preservative, Butylated hydroxytoluene (BHT) (CAS # 9010–79–1), is added in a quantity less than 100 parts per million.[1]

Each of the three components of microcrystalline cheesewax is classified by the Food and Drug Administration (FDA) as food-grade petroleum wax. The FDA defines petroleum wax as a mixture of solid hydrocarbons, paraffinic in nature, derived from petroleum, and refined to meet the specifications prescribed in 21 CFR 172.886(b). The FDA has approved food-grade petroleum wax for direct addition to chewing gum base, on cheese and raw fruits and vegetables, as a defoamer in food and as a component of microcapsules for spice-flavoring substances added to food for human consumption in accordance with 21 CFR 172.886. Petroleum wax, in accordance with 21 CFR 178.3710, is also FDA-approved for use as an indirect food additive, *i.e.,* a component of nonfood articles in contact with food. Occupational exposure to petroleum wax can result in dermal, eye, and respiratory irritation. This can be mitigated by the use of protective personal equipment and sufficient general local exhaust. References: NOSB final recommendations, May 21, 2008, *http://tiny.cc/rrmr3;* NOSB meeting transcripts, May 2008, *http://tinyurl.com/bqqzv8;* Petition and Addendum for cheesewax, April and December 2006, *http://tinyurl.com/34lp8to.*

At its May 20–22, 2008, meeting in Baltimore, MD, the NOSB recommended adding microcrystalline cheesewax to the National List for use in organic crop production as a production aid in log grown mushroom culture. In this open meeting, the NOSB evaluated microcrystalline cheesewax against the evaluation criteria of 7 U.S.C. 6517 and 6518 of the OFPA, received public comment, and concluded that the substance is consistent with the OFPA evaluation criteria. The NOSB recommendation also specified that the microcrystalline cheesewax must be made without either ethylene-propylene co-polymer, a thickener, or synthetic colors.

The Secretary has reviewed the NOSB recommendation and, consistent with this recommendation, proposes to add Microcrystalline cheesewax for organic crop production by amending § 205.601 of the National List by adding new paragraph (o) as follows:

(o) As production aids. Microcrystalline cheesewax (CAS #'s 64742–42–3, 8009–03–08, and 8002–74–2)—for use in log grown mushroom culture. Must be made without either ethylene-propylene co-polymer or synthetic colors.

Section 205.605 Nonagricultural (Nonorganic) Substances Allowed as Ingredients in or on Processed Products Labeled as "Organic" or "Made With Organic (Specified Ingredients or Food Group(s))"

This proposed rule would amend paragraph (b) of § 205.605 of the National List regulations by removing the exemption for the following substance:

Lecithin—bleached. Bleached lecithin was included in § 205.605(b) of the National List as originally published on December 21, 2000 (FR 65 80548), as an allowed synthetic ingredient in or on processed products labeled as "organic" or "made with organic (specified ingredients or food group(s))."

In June 2008, a petition was submitted to the NOSB for the removal of bleached lecithin from § 205.605(b). The petition claimed that certified organic lecithins had become available and could replace non-organic bleached lecithin. Specifically, the petition cited the adequate supply of domestically-grown organic soybeans, and the use of lighter colored raw materials, reduced processing temperatures, and reduction of color pigments by filter media that enabled the production of an organic equivalent to conventional bleached lecithin.

Lecithin is the primary emulsifier in a wide variety of organic products. Most commercial lecithin is made from soybeans. It can also be made from vegetable crops such as corn, canola and sunflower. Nonorganic soy lecithin is manufactured by using hexane to extract the oil from the soybeans. The fluid lecithin resulting from this extraction process can then be bleached with hydrogen peroxide or benzyl peroxide. Bleached lecithin is functionally equivalent to unbleached lecithin, but is used when a lighter color is preferred.

At its May 4–6, 2009, meeting in Washington, DC, the NOSB considered public comments and determined that organic light-colored lecithins are commercially available in the appropriate form, quality, and quantity to fulfill essential uses in organic handling. Additionally, the NOSB noted that there are conventional non-synthetic gums that can serve the same or similar functions as bleached lecithin.

The Secretary has reviewed the NOSB recommendation and, consistent with this recommendation, proposes to remove the exemption for lecithin—

[1] The U.S. Food and Drug Administration (FDA) permits the addition of antioxidants permitted in food to petroleum wax (21 CFR 172.886(c)).

bleached in paragraph (b) of § 206.605. The Board has recommended to continue to allow nonorganic de-oiled lecithin when an organic version is not commercially available—*see* § 205.606 discussion below. This proposed action would not prohibit nonorganic forms of bleached, de-oiled lecithin, nor would it prohibit bleaching of organic fluid lecithin with hydrogen peroxide, a bleaching agent, which is allowed for use in organic handling per § 205.605(b). References: NOSB recommendations, May 2009, *http://tiny.cc/9wgkp;* NOSB meeting transcripts, May 2009, *http://tinyurl.com/bqqzv8;* Petition to remove bleached lecithin, June 2008, *http://tinyurl.com/32e638e.*

This proposed rule would further amend paragraph (b) of § 205.605 of the National List regulations to add the following substance:

Acidified sodium chlorite. In October 2006, a petition was submitted to the NOSB for the use of acidified sodium chlorite as a synthetic processing aid in organic handling in wash and rinse water, as well as, for direct food contact and food contact surfaces. This substance contains an aqueous solution of sodium chlorite and citric acid, both of which are listed as generally recognized as safe (GRAS) in 21 CFR 186.1750 and 21 CFR 184.1033, respectively. Acidified sodium chlorite solution is a colorless to light green solution that has a slight chlorine-like odor.

The use of acidified sodium chlorite is regulated by other Federal agencies. The FDA permits uses of acidified sodium chlorite as a secondary direct food additive in accordance with the concentrations and other specified conditions in 21 CFR 173.325.[2] The FDA-approved uses for acidified sodium chlorite as secondary direct antimicrobial food treatment include the processing of poultry, red meat, comminuted and formed meat products, seafood, and raw and processed fruits and vegetables. Acidified sodium chlorite is also permitted as a sanitizing agent on food-processing equipment, utensils and other food contact surfaces including dairy-processing equipment (21 CFR 178.1010(b)(46)). The EPA has approved the use of acidified sodium chlorite (as an oxychloro species) as an ingredient in antimicrobial pesticide formulations applied to dairy-processing equipment, food-processing equipment and utensils, if the end-use concentration does not exceed 200 ppm chlorine dioxide, per 40 CFR 180.940(b) and (c). Finally, the USDA Food Safety and Inspection Service (FSIS) recognizes the use of acidified sodium chlorite for processing red meat and poultry. The FSIS Directive 7120.1 specifies that acidified sodium chlorite applied as spray or dip in red meat processing, must have pH of 5.0–7.5 and concentrations of sodium chlorite and chlorine dioxide must not exceed 1200 and 300 ppm respectively.[3] References: NOSB recommendations, May 2009, *http://tiny.cc/lq2gx;* NOSB meeting transcripts, May 2009, *http://tinyurl.com/bqqzv8;* Petition for acidified sodium chlorite, October 2006, *http://tinyurl.com/3x2wxpk;* Acidified Sodium Chlorite Technical Advisory Panel Report compiled by AMS Science and Technology Program, July 21, 2008, *http://tinyurl.com/359zdke.*

At its May 4–6, 2009, meeting in Washington, DC, the NOSB recommended adding acidified sodium chlorite to § 205.605(b) of the National List regulations for secondary direct antimicrobial food treatment and indirect food contact surface sanitizing, with the restriction that only citric acid can be used for acidification. The Board considered that acidified sodium chlorite can have a short contact time with the product being treated, does not produce chloromethanes or chlorohalogen, and breaks down upon use to water, citric acid and sodium chloride with no resulting residual chlorine levels in water. During this open meeting, the NOSB evaluated acidified sodium chlorite against the evaluation criteria of 7 U.S.C. 6517 and 6518 of the OFPA, received public comment, and concluded that the substance is consistent with the OFPA evaluation criteria.

The Secretary has reviewed the NOSB recommendation and, consistent with this recommendation, proposes to accept the NOSB's recommendation and amend § 205.605(b) of the National List by adding acidified sodium chlorite as follows:

Acidified sodium chlorite—Secondary direct antimicrobial food treatment and indirect food contact surface sanitizing. Acidified with citric acid only.[4]

Section 205.606 Nonorganically Produced Agricultural Products Allowed as Ingredients in or on Processed Products Labeled as "Organic"

This proposed rule would amend § 205.606 of the National List regulations by (1) Revising the annotation at paragraph (p); (2) redesignating paragraphs (r) through (t) and paragraphs (u) through (y), as paragraphs (s) through (u) and (w) through (aa) respectively; and (3) adding new paragraphs (r) and (v) for the purpose of amending and adding the following substances:

Lecithin—unbleached. Unbleached lecithin was included in § 205.606 of the National List as originally published on December 21, 2000 (65 FR 80548), as an allowed nonorganic agricultural ingredient in "organic" products, when the organic version is not commercially available. In August 2008, a petition was submitted to amend the listing for unbleached lecithin to reflect the availability of organic fluid lecithins. Lecithin is available in fluid or de-oiled form. After extraction from the raw material, fluid lecithin can further be de-oiled with acetone as the solvent. Both fluid and de-oiled lecithin may be bleached or unbleached. De-oiled lecithin imparts crumb softening and dough lubricating and conditioning characteristics. De-oiled lecithin is the only form of lecithin appropriate for certain products such as cakes, cookies, doughs, sauces, chocolates, frostings, and canned meat products. References: NOSB recommendations, May 2009, *http://tiny.cc/6jmsq;* NOSB meeting transcripts, May 2009, *http://tinyurl.com/bqqzv8;* Petition to remove fluid lecithin from the general category of unbleached lecithin, August 2008, *http://tinyurl.com/25zcry9.*

At its May 4–6, 2009, meeting in Washington, DC, the NOSB evaluated lecithin against the evaluation criteria of 7 U.S.C. 6517 and 6518 of the OFPA and NOP criteria (72 FR 2167, January 18, 2007) on commercial availability, received public comment, and concluded that de-oiled lecithin is consistent with the OFPA evaluation criteria. The NOSB acknowledged that the de-oiling process, rather than bleaching, differentiates the types of lecithin. Based upon the petition and public comments, the NOSB determined that de-oiled lecithin is not commercially available in organic form and recommended revising the annotation of the listing for Lecithin—unbleached in § 205.606 to Lecithin—de-oiled. This proposed action would prohibit the use of nonorganic fluid lecithin and allow the use of bleached

[2] The FDA states that acidified sodium chlorite solutions are produced by mixing an aqueous solution of sodium chlorite and any GRAS acid. For the purposes of the NOP, only citric acid is permitted in acidified sodium chlorite for use in organic handling.

[3] For other uses of acidified sodium chlorite in poultry and red meat processing, the FSIS Directive 7120.1 refers to the concentration and pH requirements provided in FDA regulation 21 CFR 173.325.

[4] The NOSB recommended the listing of this substance as sodium chlorite, acidified. In this proposed rule, "acidified" was moved to precede sodium chlorite for consistency with the use of this term in other Federal regulations.

or unbleached nonorganic de-oiled lecithin when an organic version is not commercially available.

The Secretary has reviewed the NOSB recommendation and, consistent with this recommendation, proposes to amend § 205.606 of the National List regulations to allow the use of de-oiled lecithin as a nonorganically produced agricultural substance allowed as an ingredient in or on processed products labeled as "organic" as follows:

Lecithin—de-oiled.

Orange pulp, dried. In February 2008, dried orange pulp was petitioned for use as a nonorganic agricultural ingredient in or on processed products labeled as "organic." Dried orange pulp, which may also be identified as citrus flour or citrus fiber, is used in various processed products including fresh and frozen baked goods, pastas, salad dressings, confectionery, processed cheese spreads, frozen food entrees, and processed meat and poultry products. Dried orange pulp is a yellowish light and fluffy powder. It is a byproduct of the extraction of raw oranges for orange juice production. The remaining raw pulp is washed with water, stabilized with heat, mixed, dried and milled. No chemical extraction or treatment is used in its manufacture. It functions to retain moisture in baked goods, pastas, salad dressings, confectionery, processed cheese spreads, frozen food entrees, processed meat and poultry products and seasoning brines for meat and poultry products. It also functions as a flavor enhancing agent in non-carbonated beverages and fruit drinks. In June 2004, the petitioner informed the FDA that this material is GRAS (GRAS Notice no. GRN000154). Dried orange pulp is also considered a moisture retention agent and binder for use in ground meat and poultry products. The USDA FSIS permits the use of dried orange pulp as a binder provided it does not exceed 3.5% of the product formulation. Dried orange pulp may also be used in various ground meat and poultry products where binders are permitted as described in USDA, FSIS Directive 7120.1. References: NOSB recommendations, November 2008, *http://tiny.cc/agsu7*; NOSB meeting transcripts, November 2008, *http://tinyurl.com/bqqzv8*; Petition for dried orange pulp, January 2008, *http://tinyurl.com/238e7lj.*

At its November 17–19, 2008, meeting in Washington, DC, the NOSB recommended adding dried orange pulp to § 205.606 of the National List regulations for use in organic handling as a nonorganic agricultural ingredient when the organic form of dried orange pulp is determined to be commercially unavailable. The Board determined that the demand for the organic dried orange pulp exceeded the availability of organic oranges in quantities to yield sufficient organic dried orange pulp. Specifically, the NOSB considered that most pulp is incorporated into orange juice and the low yield ratio of raw to dried pulp. The Board also considered the potential for this substance to replace certain synthetic substances which are allowed in organic handling. In this open meeting, the NOSB evaluated dried orange pulp against the evaluation criteria of 7 U.S.C. 6517 and 6518 of the OFPA and the NOP criteria (72 FR 2167, January 18, 2007) on commercial availability, received public comment, and concluded that the substance is consistent with the OFPA evaluation criteria.

The Secretary has reviewed the NOSB recommendation and, consistent with this recommendation, proposes to amend § 205.606 of the National List regulations to allow dried orange pulp, at new paragraph (r) as a nonorganically produced agricultural product allowed as an ingredient in or on processed products labeled as "organic" as follows:

Orange pulp, dried.

Seaweed, Pacific kombu. Pacific kombu seaweed was petitioned in August 2007, for use as a nonorganic agricultural ingredient in or on processed products labeled as "organic." Pacific kombu seaweed has been consumed for centuries in Japan and is used for stock in traditional Japanese foods. Pacific kombu species impart a unique flavor, which is attributed to the glutamic acid content, and which is not achievable with other seaweed species or sea vegetables. Pacific kombu seaweed is wild harvested along the coast of Japan. After harvest, the seaweed is hot water extracted, condensed, heat sterilized and filtered. The FDA has classified Pacific kombu as brown algae and affirmed that brown algae is a GRAS direct food substance. Its use in spices, seasonings, and flavorings as a flavor enhancer and flavor adjuvant in food is regulated by the FDA at 21 CFR 184.1120. References: NOSB recommendations, May 2008, *http://tiny.cc/0e1xo;* NOSB meeting transcripts, May 2008, *http://tinyurl.com/bqqzv8;* Petition for kombu seaweed, August 2007, *http://tinyurl.com/29l4oug.*

At its May 20–22, 2008, meeting in Baltimore, MD, the NOSB recommended adding Pacific kombu seaweed to § 205.606 of the National List regulations for use in organic handling as a nonorganic agricultural ingredient when the organic form of Pacific kombu seaweed is determined to be commercially unavailable. In this open meeting, the NOSB evaluated Pacific kombu seaweed against the evaluation criteria of 7 U.S.C. 6517 and 6518 of the OFPA and NOP criteria (72 FR 2167, January 18, 2007) on commercial availability, received public comment, and concluded that the substance is consistent with the OFPA evaluation criteria.

The Secretary has reviewed the NOSB recommendation and, consistent with this recommendation, proposes to amend § 205.606 of the National List regulations to allow Pacific kombu seaweed, at new paragraph (v) as a nonorganically produced agricultural product allowed as an ingredient in or on processed products labeled as "organic" as follows:

Seaweed, Pacific kombu.

III. Related Documents

Three notices were published regarding the meetings of the NOSB and its deliberations on recommendations and substances petitioned for amending the National List. Substances and recommendations included in this proposed rule were announced for NOSB deliberation in the following **Federal Register** Notices: (1) 74 FR 11904, March 20, 2009, (bleached lecithin, acidified sodium chlorite, unbleached fluid lecithin); (2) 73 FR 54781, September 23, 2008, (dried orange pulp, acidified sodium chlorite); and (3) 73 FR 18491, April 4, 2008, (microcrystalline cheesewax, acidified sodium chlorite, Pacific kombu seaweed).

IV. Statutory and Regulatory Authority

The OFPA, as amended (7 U.S.C. 6501 *et seq.*), authorizes the Secretary to make amendments to the National List based on proposed amendments developed by the NOSB. Sections 6518(k)(2) and 6518(n) of the OFPA authorize the NOSB to develop proposed amendments to the National List for submission to the Secretary and establish a petition process by which persons may petition the NOSB for the purpose of having substances evaluated for inclusion on or deletion from the National List. The National List petition process is implemented under § 205.607 of the NOP regulations. The current petition process (72 FR 2167, January 18, 2007), can be accessed through the NOP Web site at *http://www.ams.usda.gov/nop.*

A. Executive Order 12866

This action has been determined not significant for purposes of Executive Order 12866, and therefore, has not

been reviewed by the Office of Management and Budget.

B. Executive Order 12988

Executive Order 12988 instructs each executive agency to adhere to certain requirements in the development of new and revised regulations in order to avoid unduly burdening the court system. This proposed rule is not intended to have a retroactive effect.

States and local jurisdictions are preempted under the OFPA from creating programs of accreditation for private persons or State officials who want to become certifying agents of organic farms or handling operations. A governing State official would have to apply to USDA to be accredited as a certifying agent, as described in § 2115(b) of the OFPA (7 U.S.C. 6514(b)). States are also preempted under §§ 2104 through 2108 of the OFPA (7 U.S.C. 6503 through 6507) from creating certification programs to certify organic farms or handling operations unless the State programs have been submitted to, and approved by, the Secretary as meeting the requirements of the OFPA.

Pursuant to § 2108(b)(2) of the OFPA (7 U.S.C. 6507(b)(2)), a State organic certification program may contain additional requirements for the production and handling of organically produced agricultural products that are produced in the State and for the certification of organic farm and handling operations located within the State under certain circumstances. Such additional requirements must: (a) Further the purposes of the OFPA, (b) not be inconsistent with the OFPA, (c) not be discriminatory toward agricultural commodities organically produced in other States, and (d) not be effective until approved by the Secretary.

Pursuant to § 2120(f) of the OFPA (7 U.S.C. 6519(f)), this proposed rule would not alter the authority of the Secretary under the Federal Meat Inspection Act (21 U.S.C. 601 *et seq.*), the Poultry Products Inspections Act (21 U.S.C. 451 *et seq.*), or the Egg Products Inspection Act (21 U.S.C. 1031 *et seq.*), concerning meat, poultry, and egg products, nor any of the authorities of the Secretary of Health and Human Services under the Federal Food, Drug and Cosmetic Act (21 U.S.C. 301 *et seq.*), nor the authority of the Administrator of the EPA under the Federal Insecticide, Fungicide and Rodenticide Act (7 U.S.C. 136 *et seq.*).

Section 2121 of the OFPA (7 U.S.C. 6520) provides for the Secretary to establish an expedited administrative appeals procedure under which persons may appeal an action of the Secretary, the applicable governing State official, or a certifying agent under this title that adversely affects such person or is inconsistent with the organic certification program established under this title. The OFPA also provides that the U.S. District Court for the district in which a person is located has jurisdiction to review the Secretary's decision.

C. Regulatory Flexibility Act

The Regulatory Flexibility Act (RFA) (5 U.S.C. 601 *et seq.*) requires agencies to consider the economic impact of each rule on small entities and evaluate alternatives that would accomplish the objectives of the rule without unduly burdening small entities or erecting barriers that would restrict their ability to compete in the market. The purpose is to fit regulatory actions to the scale of businesses subject to the action. Section 605 of the RFA allows an agency to certify a rule, in lieu of preparing an analysis, if the rulemaking is not expected to have a significant economic impact on a substantial number of small entities.

Pursuant to the requirements set forth in the RFA, the AMS performed an economic impact analysis on small entities in the final rule published in the **Federal Register** on December 21, 2000 (65 FR 80548). The AMS has also considered the economic impact of this action on small entities. The impact on entities affected by this proposed rule would not be significant. The effect of this proposed rule would be to allow the use of additional substances in agricultural production and handling. This action would relax the regulations published in the final rule and would provide small entities with more tools to use in day-to-day operations. The removal of lecithin-bleached is not expected to have a significant economic impact on small entities as alternative forms of lecithin are commercially available. The AMS concludes that the economic impact of this addition of allowed substances, if any, would be minimal and beneficial to small agricultural service firms. Accordingly, USDA certifies that this rule will not have a significant economic impact on a substantial number of small entities.

Small agricultural service firms, which include producers, handlers, and accredited certifying agents, have been defined by the Small Business Administration (SBA) (13 CFR 121.201) as those having annual receipts of less than $7,000,000 and small agricultural producers are defined as those having annual receipts of less than $750,000.

According to USDA, Economic Research Service (ERS) data based on information from USDA-accredited certifying agents, the number of certified U.S. organic crop and livestock operations totaled nearly 13,000 and certified organic acreage exceeded 4.8 million acres in 2008.[5] ERS, based upon the list of certified operations maintained by the National Organic Program, estimated the number of certified handling operations was 3,225 in 2007.[6] AMS believes that most of these entities would be considered small entities under the criteria established by the SBA.

The U.S. sales of organic food and beverages have grown from $3.6 billion in 1997 to nearly $21.1 billion in 2008.[7] The organic industry is viewed as the fastest growing sector of agriculture, representing over 3 percent of overall food sales in 2009. Between 1990 and 2008, organic food sales have historically demonstrated a growth rate between 15 to 24 percent each year. In 2009, organic food sales grew 5.1%.[8]

In addition, USDA has 97 accredited certifying agents who provide certification services to producers and handlers. A complete list of names and addresses of accredited certifying agents may be found on the AMS NOP Web site, at *http://www.ams.usda.gov/nop.* AMS believes that most of these accredited certifying agents would be considered small entities under the criteria established by the SBA.

D. Paperwork Reduction Act

No additional collection or recordkeeping requirements are imposed on the public by this proposed rule. Accordingly, OMB clearance is not required by section 350(h) of the Paperwork Reduction Act of 1995, 44 U.S.C. 3501, *et seq.,* or OMB's implementing regulation at 5 CFR part 1320.

The AMS is committed to compliance with the Government Paperwork Elimination Act (GPEA), which requires Government agencies in general to

[5] U.S. Department of Agriculture, Economic Research Service. 2009. *Data Sets: U.S. Certified Organic Farmland Acreage, Livestock Numbers and Farm Operations, 1992–2008. http://www.ers.usda.gov/Data/Organic/.*

[6] U.S. Department of Agriculture, Economic Research Service, 2009. *Data Sets: Procurement and Contracting by Organic Handlers: Documentation. http://www.ers.usda.gov/Data/OrganicHandlers/Documentation.htm.*

[7] Dimitri, C., and L. Oberholtzer. 2009. *Marketing U.S. Organic Foods: Recent Trends from Farms to Consumers,* Economic Information Bulletin No. 58, U.S. Department of Agriculture, Economic Research Service, *http://www.ers.usda.gov/Publications/EIB58.*

[8] Organic Trade Association's 2010 *Organic Industry Survey, http://www.ota.com.*

provide the public the option of submitting information or transacting business electronically to the maximum extent possible.

The AMS is committed to complying with the E-Government Act to promote the use of the Internet and other information technologies to provide increased opportunities for citizen access to Government information and services, and for other purposes.

List of Subjects in 7 CFR Part 205

Administrative practice and procedure, Agriculture, Animals, Archives and records, Imports, Labeling, Organically produced products, Plants, Reporting and recordkeeping requirements, Seals and insignia, Soil conservation.

For the reasons set forth in the preamble, 7 CFR part 205, Subpart G is proposed to be amended as follows:

PART 205—NATIONAL ORGANIC PROGRAM

1. The authority citation for 7 CFR part 205 continues to read as follows:

Authority: 7 U.S.C. 6501–6522.

2. Section 205.601 is amended by adding paragraph (o) to read as follows:

§ 205.601 Synthetic substances allowed for use in organic crop production.

* * * * *

(o) As production aids. Microcrystalline cheesewax (CAS #'s 64742–42–3, 8009–03–08, and 8002–74–2)—for use in log grown mushroom culture. Must be made without either ethylene-propylene co-polymer or synthetic colors.

* * * * *

3. Section 205.605, paragraph (b), is amended by:

A. Removing "Lecithin—bleached."; and

B. Adding one new substance to paragraph (b) to read as follows:

§ 205.605 Nonagricultural (nonorganic) substances allowed as ingredients in or on processed products labeled as "organic" or "made with organic (specified ingredients or food group(s))."

* * * * *

(b) * * *

Acidified sodium chlorite—Secondary direct antimicrobial food treatment and indirect food contact surface sanitizing. Acidified with citric acid only.

* * * * *

4. Section 205.606 is amended by:

A. Revising paragraph (p);

B. Redesignating paragraphs (r) through (t) and paragraphs (u) through (y) as paragraphs (s) through (u) and (w) through (aa) respectively; and

C. Adding new paragraphs (r) and (v) to read as follows:

§ 205.606 Nonorganically produced agricultural products allowed as ingredients in or on processed products labeled as "organic."

* * * * *

(p) Lecithin—de-oiled.

* * * * *

(r) Orange pulp, dried.

* * * * *

(v) Seaweed, Pacific kombu.

* * * * *

Dated: November 2, 2010.

David R. Shipman,

Acting Administrator.

[FR Doc. 2010–28042 Filed 11–5–10; 8:45 am]

BILLING CODE 3410–02–P

DEPARTMENT OF AGRICULTURE

Agricultural Marketing Service

7 CFR Part 924

[Doc. No. AMS–FV–10–0053; FV10–924–1 PR]

Fresh Prunes Grown in Designated Counties in Washington and in Umatilla County, OR; Termination of Marketing Order 924

AGENCY: Agricultural Marketing Service, USDA.

ACTION: Proposed rule.

SUMMARY: This rule invites comments on the proposed termination of the Federal marketing order regulating the handling of fresh prunes grown in designated counties in Washington and in Umatilla County, Oregon, and the rules and regulations issued thereunder. Marketing Order No. 924 is administered locally by the Washington-Oregon Fresh Prune Marketing Committee (Committee), which unanimously recommended termination of the marketing order at a meeting held on June 1, 2010. This recommendation is based on the Committee's determination that this order is no longer an effective marketing tool for the fresh prune industry, and that termination would best serve the current needs of the industry while also eliminating the costs associated with the operation of the marketing order.

DATES: Comments must be received by January 7, 2011.

ADDRESSES: Interested persons are invited to submit written comments concerning this proposal. Comments must be sent to the Docket Clerk, Marketing Order Administration Branch, Fruit and Vegetable Programs, AMS, USDA, 1400 Independence Avenue, SW., STOP 0237, Washington, DC 20250–0237; Fax: (202) 720–8938; or Internet: *http://www.regulations.gov*. All comments should reference the document number and the date and page number of this issue of the **Federal Register** and will be made available for public inspection in the Office of the Docket Clerk during regular business hours, or can be viewed at: *http://www.regulations.gov*. All comments submitted in response to this rule will be included in the record and will be made available to the public. Please be advised that the identity of the individuals or entities submitting the comments will be made public on the Internet at the address provided above.

FOR FURTHER INFORMATION CONTACT: Martin Engeler, Marketing Order Administration Branch, Fruit and Vegetable Programs, AMS, USDA, 2202 Monterey Street, Suite 102–B, Fresno, California 93721, Telephone: (559) 487–5110, Fax: (559) 487–5906, or E-mail: *Martin.Engeler@ams.usda.gov;* or Robert Curry, Marketing Order Administration Branch, Fruit and Vegetable Programs, AMS, USDA, 1220 SW Third Avenue, Suite 385, Portland, Oregon 97068, Telephone: (503) 326–2724, Fax: (503) 326–7440, or E-mail: *Robert.Curry@ams.usda.gov*.

Small businesses may request information on complying with this regulation by contacting Antoinette Carter, Marketing Order Administration Branch, Fruit and Vegetable Programs, AMS, USDA, 1400 Independence Avenue, SW., STOP 0237, Washington, DC 20250–0237; telephone: (202) 720–2491, Fax: (202) 720–8938, or E-mail: *Antoinette.Carter@ams.usda.gov*.

SUPPLEMENTARY INFORMATION: This proposed rule is governed by § 608c(16)(A) of the Agricultural Marketing Agreement Act of 1937, as amended (7 U.S.C. 601–674), hereinafter referred to as the "Act", and § 924.64 of Marketing Agreement and Order No. 924, both as amended (7 CFR part 924), effective under the Act and hereinafter referred to as the "order".

The Department of Agriculture (USDA) is issuing this rule in conformance with Executive Order 12866.

This proposal to terminate the order has been reviewed under Executive Order 12988, Civil Justice Reform. This rule is not intended to have retroactive effect.

The Act provides that administrative proceedings must be exhausted before parties may file suit in court. Under section 608c(15)(A) of the Act, any handler subject to an order may file

with USDA a petition stating that the order, any provision of the order, or any obligation imposed in connection with the order is not in accordance with law and request a modification of the order or to be exempted therefrom. A handler is afforded the opportunity for a hearing on the petition. After the hearing USDA would rule on the petition. The Act provides that the district court of the United States in any district in which the handler is an inhabitant, or has his or her principal place of business, has jurisdiction to review USDA's ruling on the petition, provided an action is filed not later than 20 days after the date of the entry of the ruling.

This rule proposes to terminate the order and the rules and regulations issued thereunder. The order contains authority for regulation of the handling of fresh prunes grown in designated counties in Washington and in Umatilla County, Oregon. At a meeting held in Prosser, Washington, on June 1, 2010, the Committee unanimously recommended termination of the order.

Section 924.64 of the order provides, in pertinent part, that USDA terminate or suspend any or all provisions of the order when a finding is made that the order does not tend to effectuate the declared policy of the Act. In addition, section 608c(16)(A) of the Act provides that USDA terminate or suspend the operation of any order whenever the order or any provision thereof obstructs or does not tend to effectuate the declared policy of the Act. Additionally, USDA is required to notify Congress not later than 60 days before the date the order would be terminated.

The order has been in effect since 1960 and has provided the fresh prune industry in Washington and Oregon with authority for grade, size, quality, maturity, pack, and container regulations, as well as the authority for mandatory inspection. The order also authorizes production research and marketing research and development projects, as well as the necessary reporting, recordkeeping, and assessment functions required for operation.

Based on the Committee's recommendation, USDA suspended the order's handling regulations on May 9, 2006 (71 FR 26817). The suspended handling regulations (§ 924.319) consist of minimum quality requirements for certain fresh prunes produced within the regulated production area. When the Committee made the recommendation to suspend the handling regulations, the industry believed that the costs of inspection outweighed the benefits of having the regulatory requirements in effect. The Committee decided to evaluate the marketing conditions annually thereafter to determine whether to continue the regulatory suspension, reinstate handling regulations, or take some other action. The only regulatory provisions in effect since 2006 have been collection of assessments to maintain the functionality of the Committee, and a reporting provision that provides a basis for assessment collection.

After four years of evaluating the effects of operating without the quality regulations, the Committee has determined that the suspension of the regulations has not negatively impacted the marketing of fresh Washington-Oregon prunes. Analysis of the marketing conditions over the past four years, as well as an analysis of statistics showing that the fresh prune industry has been in steady decline over the past several decades, led the Committee to conclude that the order is no longer an effective marketing tool for the fresh prune industry, and that termination would be the best means of relieving the industry of the costs and burdens associated with the order.

Evidence supporting the conclusion that the industry has been decreasing in scope and volume include statistics showing that the Washington-Oregon fresh prune industry has fewer producers and handlers today then there were when the order was promulgated, and that acreage and production has significantly declined as well. For example, USDA Marketing Order Administration Branch records from an amendatory referendum indicate that there were approximately 720 producers of fresh prunes in the order's production area in 1974, while the most recent information received from the Committee indicates that there are now only 56 currently active producers. Furthermore, Committee records indicate that there were 51 handlers in 1961—the year after the order was promulgated—as opposed to the six currently operating handlers. Committee records also indicate that 12,120 tons of fresh prunes were shipped in 1961 as compared to the 4,260 tons shipped in 2009. Finally, data provided by the USDA National Agricultural Statistics Service (NASS) indicates that prune acreage in Washington and Oregon has declined in the past 50 years by about 80 percent.

This proposed termination of the order is intended to solicit input and any additional information available from interested parties regarding whether the order should be terminated. USDA will evaluate all available information prior to making a final determination on this matter. Termination of the order would become effective only after a 60-day notification to Congress as required by law.

Initial Regulatory Flexibility Analysis

Pursuant to the requirements set forth in the Regulatory Flexibility Act (RFA) (5 U.S.C. 601–612), the Agricultural Marketing Service (AMS) has considered the economic impact of this rule on small entities. Accordingly, AMS has prepared this initial regulatory flexibility analysis.

The purpose of the RFA is to fit regulatory actions to the scale of business subject to such actions in order that small businesses will not be unduly or disproportionately burdened. Marketing orders issued pursuant to the Act, and the rules issued thereunder, are unique in that they are brought about through group action of essentially small entities acting on their own behalf.

There are six handlers of Washington-Oregon fresh prunes subject to regulation under the order and approximately 56 fresh prune producers in the regulated production area. Small agricultural service firms are defined by the Small Business Administration (SBA) (13 CFR 121.201) as those having annual receipts of less than $7,000,000, and small agricultural producers are defined as those having annual receipts of less than $750,000.

Based on information compiled by both the Committee and NASS, the average producer price for fresh prunes in 2009 was approximately $385 per ton. With 4,260 tons of fresh prunes shipped from the Washington and Oregon production areas in 2009, this equates to average producer revenue of about $30,000. In addition, AMS Market News Service reported that 2009 f.o.b. prices ranged from $12.00 to $18.00 per 30-pound container, indicating that the entire Washington-Oregon fresh prune industry handled less than $7,000,000 worth of prunes last season. In view of the foregoing, the majority of Washington-Oregon fresh prune producers and handlers may be classified as small entities.

This rule proposes to terminate the Federal marketing order for fresh prunes grown in Washington and Oregon, and the rules and regulations issued thereunder. The order contains authority to regulate the handling of fresh prunes grown in designated counties in Washington and in Umatilla County, Oregon. The Committee has determined that the order no longer provides the fresh prune industry with an effective marketing tool since evidence shows that prunes can be shipped absent the order's quality

regulations without negative impact, and that the costs associated with the order outweigh the benefits. The Committee also believes that the overall decline in the scope and volume of the fresh prune industry in Washington and Oregon supports order termination. As a consequence, in action taken on June 1, 2010, the Committee unanimously recommended that USDA terminate the order.

Section 924.64 of the order provides that USDA terminate or suspend any or all provisions of the order when a finding is made that the order does not tend to effectuate the declared policy of the Act. Furthermore, § 608c(16)(A) of the Act provides that USDA shall terminate or suspend the operation of any order whenever the order or provision thereof obstructs or does not tend to effectuate the declared policy of the Act. An additional provision requires that Congress be notified not later than 60 days before the date the order would be terminated.

The proposed termination of the order is a regulatory relaxation and would consequently reduce the costs to both handlers and producers (while marketing order requirements are applied to handlers, the costs of such requirements are often passed on to producers). Furthermore, the Committee has determined, through its analysis of the four year period of regulatory suspension, that termination would not negatively impact the marketing of fresh prunes. The Committee considered alternatives to this rule including leaving the order active but continuing with regulatory suspension, and suspending the order rather than terminating it. Interest was not shown for either option, however, and the Committee subsequently recommended that the order be terminated.

This proposed rule is intended to solicit input and other available information from interested parties on whether the order should be terminated. USDA will evaluate all available information prior to making a final determination on this matter.

In accordance with the Paperwork Reduction Act of 1995, (44 U.S.C. Chapter 35), the information collection requirements being suspended were approved previously by the Office of Management and Budget (OMB) and assigned OMB No. 0581–0189, Fruit Crops. Termination of the reporting requirements under the order is expected to reduce the reporting burden on Washington-Oregon prune handlers by 2.92 hours, and should further reduce industry expenses. Handlers are no longer required to file forms with the Committee. This proposed rule would thus not impose any additional reporting or recordkeeping requirements on either small or large prune handlers. As with all Federal marketing order programs, reports and forms are periodically reviewed to reduce information requirements and duplication by industry and public sector agencies.

In addition, USDA has not identified any relevant Federal rules that duplicate, overlap or conflict with this rule.

AMS is committed to complying with the E-Government Act, to promote the use of the Internet and other information technologies to provide increased opportunities for citizen access to Government information and services, and for other purposes.

The Committee's meeting was widely publicized throughout the Washington-Oregon fresh prune industry and all interested persons were invited to attend the meeting and participate in Committee deliberations. Like all Committee meetings, the June 1, 2010, meeting was a public meeting and all entities, both large and small, were able to express their views on this issue. Additionally, interested persons are invited to submit information on the regulatory and informational impacts of this action on small businesses.

A small business guide on complying with fruit, vegetable, and specialty crop marketing agreements and orders may be viewed at: *http://www.ams.usda.gov/MarketingOrdersSmallBusinessGuide.* Any questions about the compliance guide should be sent to Antoinette Carter at the previously mentioned address in the **FOR FURTHER INFORMATION CONTACT** section.

This rule invites comments on the proposed termination of Marketing Order 924, which regulates the handling of fresh prunes grown in designated counties in Washington and in Umatilla County, Oregon. All written comments received in a timely manner will be considered before a final determination is made on this matter.

Based on the foregoing, and pursuant to § 608c(16)(A) of the Act and § 924.64 of the order, USDA is considering termination of the order. If USDA decides to terminate the order, trustees would be appointed to conclude and liquidate the affairs of the Committee, and would continue in that capacity until discharged by USDA. In addition, USDA would notify Congress 60 days in advance of termination pursuant to § 608c(16)(A) of the Act.

List of Subjects in 7 CFR Part 924

Prunes, Marketing agreements, Reporting and recordkeeping requirements.

PART 924—FRESH PRUNES GROWN IN DESIGNATED COUNTIES IN WASHINGTON AND IN UMATILLA COUNTY, OREGON—[REMOVED]

For the reasons set forth in the preamble, under the authority of 7 U.S.C. 601–674, 7 CFR part 924 is proposed to be removed.

Dated: November 2, 2010.

David R. Shipman,

Acting Administrator.

[FR Doc. 2010–28046 Filed 11–5–10; 8:45 am]

BILLING CODE 3410–02–P

DEPARTMENT OF AGRICULTURE

Agricultural Marketing Service

7 CFR Part 1214

[Document No. AMS–FV–10–0008–PR–1A]

RIN 0581–AD00

Proposed Christmas Tree Promotion, Research, and Information Order

AGENCY: Agricultural Marketing Service, USDA.

ACTION: Proposed rule with request for comments.

SUMMARY: This proposed rule invites comments on the establishment of an industry-funded promotion, research, and information program for fresh cut Christmas trees. The proposed Christmas Tree Promotion, Research, and Information Order (Proposed Order), was submitted to the Department of Agriculture (Department) by the Christmas Tree Checkoff Task Force, an industry wide group of producers and importers that support this proposed program. Under the Proposed Order, producers and importers of fresh cut Christmas trees would pay an initial assessment of $0.15 per tree, which would be paid to the proposed Christmas Tree Promotion Board (Board). This Board would be responsible for administration and operation of the proposed Order. Producers and importers that domestically produce or import less than 500 Christmas trees annually would be exempt from the assessment. The proposed program is authorized under the Commodity Promotion, Research, and Information Act of 1996 (1996 Act). A referendum will be conducted, among producers and importers, three years after the

collection of assessments begin to determine if Christmas tree producers and importers favor the continuation of this program. This proposed rule also announces the Agricultural Marketing Service's (AMS) intention to request approval of new Christmas tree information collection requirements by the Office of Management and Budget (OMB) for the operation of the Proposed Order.

DATES: Comments must be received by February 7, 2011. Pursuant to the Paperwork Reduction Act (PRA), comments on the information collection burden that would result from this proposal must be received by February 7, 2011.

ADDRESSES: Interested persons are invited to submit written comments on the Internet at *http://www.regulations.gov* or to the Research and Promotion Branch, Fruit and Vegetable Programs, AMS, USDA, 1400 Independence Avenue, SW., Stop 0244, Room 0632–S, Washington, DC 20250–0244; fax: (202) 205–2800. All comments should reference the docket number and the date and page number of this issue of the **Federal Register** and will be made available for public inspection in the above office during regular business hours or can be viewed at *http://www.regulations.gov.* All comments submitted in response to this proposed rule will be included in the record and will be made available to the public. Please be advised that the identity of the individuals or entities submitting comments will be made public on the Internet at the address provided above.

Pursuant to PRA, comments regarding the accuracy of the burden estimate, ways to minimize the burden, including the use of automated collection techniques or other forms of information technology, or any other aspect of this collection of information, should be sent to the above address. In addition, comments concerning the information collection should also be sent to the Desk Office for Agriculture, Office of Information and Regulatory Affairs, Office of Management and Budget, New Executive Office Building, 725 17th Street, NW., Room 725, Washington, DC 20503.

FOR FURTHER INFORMATION CONTACT: Patricia A. Petrella, Marketing Specialist, Research and Promotion Branch, Fruit and Vegetable Programs, AMS, USDA, 1400 Independence Avenue, SW., Room 0632, Stop 0244, Washington, DC 20250–0244; telephone: (301) 334–2891; or facsimile: (301) 334–2896; or e-mail: *Patricia.Petrella@ams.usda.gov.*

SUPPLEMENTARY INFORMATION: This proposed rule is issued pursuant to the Commodity Promotion, Research, and Information Act of 1996 (1996 Act) (7 U.S.C. 7411–7425).

Executive Order 12866

This proposed rule has been determined not significant for purposes of Executive Order 12866 and therefore has not been reviewed by the Office of Management and Budget (OMB).

Executive Order 12988

This proposed rule has been reviewed under Executive Order 12988, Civil Justice Reform. It is not intended to have retroactive effect. Section 524 of the 1996 Act provides that it shall not affect or preempt any other Federal or state law authorizing promotion or research relating to an agricultural commodity.

Under section 519 of the 1996 Act, a person subject to an order may file a written petition with the Department stating that an order, any provision of an order, or any obligation imposed in connection with an order, is not established in accordance with the law, and requesting a modification of an order or an exemption from an order. Any petition filed challenging an order, any provision of an order, or any obligation imposed in connection with an order, shall be filed within two years after the effective date of an order, provision, or obligation subject to challenge in the petition. The petitioner will have the opportunity for a hearing on the petition. Thereafter, the Department will issue a ruling on the petition. The 1996 Act provides that the district court of the United States for any district in which the petitioner resides or conducts business shall have the jurisdiction to review a final ruling on the petition, if the petitioner files a complaint for that purpose not later than 20 days after the date of the entry of the Department's final ruling.

Executive Order 13132

This proposed rule has been reviewed under Executive Order 13132, Federalism. This Executive Order directs agencies to construe, in regulations and otherwise, a Federal Statute to preempt State law only when the statute contains an express preemption provision. Section 524 of the 1996 Act provides that the Act shall not affect or preempt any other Federal or State law authorizing promotion or research relating to an agricultural commodity.

The proponent, the Christmas Tree Checkoff Task Force is an industry wide group of producers and importers that support this proposed program. They have conducted meetings throughout the United States with several State and multi-State Christmas tree organizations. The proposed program is not intended to duplicate any State program. The proponents have determined that they need a mechanism that would be sustainable over time. A national Christmas tree research and promotion program would accomplish this goal.

Summary

This proposed rule invites comments on the establishment of an industry-funded promotion, research, and information program for fresh cut Christmas trees. The proposed Christmas Tree Promotion, Research, and Information Order (Proposed Order), was submitted to the Department of Agriculture (Department) by the Christmas Tree Checkoff Task Force (Task Force), an industry wide group of producers and importers that support this proposed program. Under the Proposed Order, producers and importers of fresh cut Christmas trees would pay an initial assessment of $0.15 cents per tree, which would be paid to the Christmas Tree Promotion Board (Board). This Board would be responsible for administration and operation of the Proposed Order. Producers and importers that domestically produce or import less than 500 Christmas trees annually would be exempt from the assessment. The proposed program is authorized under the 1996 Act.

A referendum will be conducted, among producers and importers, three years after the collection of assessments begin to determine if Christmas tree producers and importers favor the continuation of this program. This proposed rule also announces the Agricultural Marketing Service's (AMS) intention to request approval of new Christmas tree information collection requirements by the OMB for the operation of Proposed Order.

Authority in 1996 Act

The proposed Order is authorized under the 1996 Act which authorizes USDA to establish agricultural commodity research and promotion orders which may include a combination of promotion, research, industry information, and consumer information activities funded by mandatory assessments. These programs are designed to maintain and expand markets and uses for agricultural commodities. As defined under section 513(1)(D) of the 1996 Act, agricultural commodities include the products of

forestry. The proposed Order would provide for the development and financing of a coordinated program of research, promotion, and information for Christmas trees.

The 1996 Act provides for a number of optional provisions that allow the tailoring of orders for different commodities. Section 516 of the 1996 Act provides permissive terms for orders, and other sections provide for alternatives. For example, section 514 of the 1996 Act provides for orders applicable to (1) Producers, (2) first handlers and others in the marketing chain as appropriate, and (3) importers (if imports are subject to assessments). Section 516 states that an order may include an exemption of de minimis quantities of an agricultural commodity; different payment and reporting schedules; coverage of research, promotion, and information activities to expand, improve, or make more efficient the marketing or use of an agricultural commodity in both domestic and foreign markets; provision for reserve funds; provision for credits for generic and branded activities; and assessment of imports.

In addition, section 518 of the 1996 Act provides for referenda to ascertain approval of an order to be conducted either prior to its going into effect or within three years after assessments first begin under the order. An order also may provide for its approval in a referendum based upon different voting patterns. Section 515 provides for establishment of a board or council from among producers, first handlers and others in the marketing chain as appropriate, and importers, if imports are subject to assessment.

Industry Background

Christmas trees have been commercially sold in the United States since about 1850, when most were cut from wild stands. In the last 55 to 60 years, Christmas trees have been farmed and harvested as an agricultural row crop. Most Christmas trees are now grown on or selected and cut by consumers on tree farms. The U.S. Christmas tree industry consists of over 12,000 farms producing over 17 million Christmas trees per year. The best selling Christmas trees are Scotch pine, Douglas fir, noble fir, Fraser fir, Virginia pine, balsam fir and white pine.

Christmas trees are grown for retail sale in almost all U.S. states. Oregon, Michigan, Wisconsin, North Carolina and Pennsylvania together produce more than 75 percent of the trees produced each year. During 2007, 47 out of the 50 States contributed to the production of Christmas trees.

Competition

The fresh cut Christmas tree industry competes directly with the artificial Christmas tree industry. Artificial Christmas tree companies advertise heavily throughout the fall and Christmas seasons. According to data supplied by the proponents artificial tree purchases have increased from 9.8 million in 2003 to 17.4 million in 2007.

Imports

According to U.S. Department of Commerce, U.S. Census Bureau, Foreign Trade Statistics, imports of Christmas trees from 2006 through 2008 averaged about 1.9 million trees. During those years, imports from Canada accounted for 99.72 percent of the total imports. Italy, Colombia and Mali comprised about .28 million trees or less than one percent. For the same period, these imports were valued at 27.427 million dollars.

Prices

According to the Task Force, in 2007 the average price per tree for a Noble was approximately $18.00 and the average price per tree for a Douglas was $11.00. By averaging these two types of Christmas trees, prices would be approximately $15 per tree. With 31 million trees cut in 2007, the value would be approximately $465 million (value at point of first sale).

Need for a Program

A national research and promotion program for Christmas trees would help the industry to address the many market problems it currently faces. According to the Task Force, two main factors currently affecting Christmas tree sales, both in the domestic market and abroad, are increased competition and changing consumer habits.

According to additional data supplied by the Task Force, the market share of fresh Christmas trees in the U.S. from 1965 to 2008 has declined by 6 percent. In comparison, the market share of artificial trees has increased 655 percent from 1965 to 2008.

According to the proponent data, sales of fresh cut Christmas trees decreased by 15 million trees from 37 million trees sold in 1991 down to 22 million trees sold in 2002. The industry saw an increase in sales in 2003 through 2007 when the industry conducted a voluntary marketing campaign which was lead by a small group of producers and retailers. This voluntary marketing campaign saw sales rebound by 9 million trees—from 22 million trees sold in 2002 to 31 million trees sold in 2007. Even with the strong sales response to the marketing efforts, the voluntary marketing program suffers from a lack of funding.

The Christmas tree industry has tried three different times to conduct promotional programs based on voluntary contributions. Each time, after about three years, the revenue declined to a point where the programs were ineffective. The decline in revenue is attributable to the voluntary nature of these programs. Therefore, the proponents have determined that they need a mechanism that would be sustainable over time. They believe that a national Christmas tree research and promotion program would accomplish this goal.

Specific Provisions

Definitions

Pursuant to section 513 of the 1996 Act, sections 1214.1 through 1214.30 of the proposed Order define certain terms that would be used throughout the Order. Several of the terms are common to all research and promotion programs authorized under the 1996 Act while other terms are specific to the proposed Christmas tree Order.

Section 1214.1 would define the term "Act" to mean the Commodity Promotion, Research, and Information Act of 1996 (7 U.S.C. 7411–7425), and any amendments thereto.

Section 1214.2 would define the term "Christmas Tree Promotion Board" to mean the administrative body established pursuant to § 1214.40.

Section 1214.3 would define the term "Christmas tree" to mean any tree of the coniferous species that is severed or cut from its roots and marketed as a Christmas tree. The coniferous species include the botanical group of trees that have needle-like or scale-like leaves.

Section 1214.5 would define the term "crop year" to mean August 1 through July 31.

Section 1214.6 would define the term "Customs" to mean the U.S. Customs and Border Protection or U.S. Customs Service, an agency of the U.S. Department of Homeland Security.

Section 1214.8 would define the term "fiscal period" or "fiscal year" to mean the period August 1 through July 31.

Section 1214.9 would define the term "importer" to mean any person importing Christmas trees into the United States in a fiscal period as a principal or agent, broker, or consignee of any person who domestically produces Christmas trees outside of the United States for sale in the United States, and who is listed in the import records as the importer of record for such Christmas trees.

Section 1214.10 would define the term "information" to mean activities or

programs designed to disseminate the results of research, new and existing marketing programs, new and existing marketing strategies, new and existing uses and applications, and to enhance the image of Christmas trees.

Section 1214.11 would define the term "marketing" to mean the sale or other disposition of Christmas trees in interstate, foreign, or intrastate commerce.

Section 1214.13 would define the terms "part" and "subpart." The term "part" would mean the Christmas Tree Promotion, Research, and Information Order and all rules, regulations, and supplemental orders issued pursuant to the Act and the Order. The Order would be a "subpart" of the part.

Section 1214.15 would define the terms programs, plans, and projects to mean research, promotion and information programs, plans, or projects established under the Order.

Section 1214.16 would define "produce" to mean to engage in the cutting and selling of Christmas trees for the holiday market.

Section 1214.17 would define "producer" to mean any person who is engaged in the production of Christmas trees in the United States, and who owns, or shares the ownership and risk of loss of production of Christmas trees or a person who is engaged in the business of producing, or causing to be domestically produced, Christmas trees beyond personal use and having value at first point of sale.

Section 1214.18 would define the term "promotion" to mean any action taken, including paid advertising, public relations and other communications, and promoting the results of research, that presents a favorable image of Christmas trees to the public and to any and all consumers and those who influence consumption of Christmas trees with the intent of improving the perception, markets and competitive position of Christmas trees and stimulating sales of Christmas trees.

Section 1214.19 would define the term "research" to mean any activity that advances the position of Christmas trees in the market place that includes, but is not limited to any type of test, study, or analysis designed to advance the image, desirability, use, marketability, sales, product development, or quality of Christmas trees; and the effectiveness of market development and promotion efforts including competitiveness, efficiency, pest and disease control, and other aspects of Christmas tree production.

Sections 1214.4, 1214.7, 1214.12, 1214.14, 1214.20, 1214.21, 1214.22, 1214.23, and 1214.24 would define the terms "conflict of interest," "Department or UDSA," "Order," "person," "Secretary," "State," "suspend," "terminate," and "United States," respectively. The definitions are the same as those specified in section 513 of the Act.

Establishment of the Board

Pursuant to section 515 of the 1996 Act, §§ 1214.40 through 1214.47 of the proposed Order would detail the establishment and membership of the proposed Christmas Tree Promotion Board, nominations and appointments, the term of office, removal and vacancies, procedure, reimbursement and attendance, powers and duties, and prohibited activities.

Section 1214.40 would specify the Board establishment and membership. The Board would be composed of 12 members. Eleven members would be domestic producers and would be allocated to three regions in the United States based on the volume of Christmas trees domestically produced from each respective region. The total number of Board members could not be increased. The 11 members would be allocated as follows: Region number 1 (Western Region), 5 members; region number 2 (Central Region), 2 members; and region number 3 (Eastern Region), 4 members. Specific States and territories within each domestic region would be specified in § 1214.40(a)(1) of the proposed Order. One member would be an importer who imports Christmas trees into the United States.

The Task Force recommended that the Board have no alternate Board members. It wants to ensure that industry members who seek representation and serve on the Board are committed to their service and participate in all Board meetings.

Every 5 years, but no more often than once every 3 years, the Board must review, based on a 3-year average, the geographical distribution of the production of Christmas trees within the United States and the number of Christmas trees imported into the United States. If warranted, the Board would recommend to the Secretary that the Board membership be reapportioned appropriately to reflect such changes. Any changes in Board composition would be implemented by the Secretary through rulemaking.

Section 1214.41 of the proposed Order would specify Board nominations and appointments. The initial nominations would be conducted by the Department. The Department would publicize the nomination process, using trade press or other means it deems appropriate, and outreach to all sizes of Christmas tree producers for the U.S. market. The Department could use regional caucuses, mail or other methods to elicit potential nominees. The Secretary would select the members of the Board from the nominations.

Regarding subsequent nominations, the Board staff would solicit nominations as described in the preceding paragraph. Nominees would have the opportunity to provide the Board a short background statement outlining their qualifications and desire to serve on the Board. Nominees for the initial and subsequent Boards must domestically produce 500 or more Christmas trees during the crop year to be eligible to serve on the Board.

Producers who domestically produce Christmas trees in more than one region could seek nomination in the region where the majority of their trees are produced. The names of producers would be placed on a ballot by region. The ballots along with the background statements would be mailed to producers in each respective region for a vote. Producers who produce in more than one region could only vote in the region in which they produce a majority of their Christmas trees. The nominee receiving the highest number of votes and the nominee receiving the second highest number of votes shall be submitted to the Department as the producers' first and second choice nominees.

Importer nominees would be solicited by the Board from those importers who have paid their assessments to the Board in the most recent fiscal period. They also must have imported more than 500 Christmas trees during the fiscal period. The names of importer nominees would then be placed on a ballot. The ballots along with the background statements would be mailed to importers for a vote. The nominee receiving the highest number of votes and the nominee receiving the second highest number of votes shall be submitted to the Department as the producers' first and second choice nominees. If there is an insufficient number of nominees from whom to appoint members to the Board, the Secretary may appoint members in such a manner as the Secretary determines appropriate.

The Board would submit nominations to the Secretary 90 days before the new Board term begins. The Secretary would select the members of the Board from the nominations submitted by the Board (through the balloting process). In order to provide the Board flexibility, the Board could recommend to the Secretary modifications to its nomination procedures. Any such modifications would be implemented

through rulemaking by the Secretary. Section 1214.42 of the proposed Order would specify the term of office. With the exception of the initial Board, each Board member would serve a three-year term or until the Secretary selected his or her successor. Each term of office would begin on January 1 and end on December 31. No member could serve more than two consecutive terms, excluding any term of office less than three years. For the initial board, the terms of Board members would be staggered for two, three, and four years.

Section 1214.43 of the proposed Order would specify criteria for the removal of members and for filling vacancies. If a Board member ceased to work for a producer or importer or ceased to do business in the region he or she represented, such position would become vacant. Additionally, the Board could recommend to the Secretary that a member be removed from office if the member consistently refused to perform his or her duties or engaged in dishonest acts or willful misconduct. The Secretary could remove the member if he or she finds that the Board's recommendation shows adequate cause. Further, without recommendation of the Board, a member may be removed by the Secretary upon showing of adequate cause, including the failure by a member to submit reports or remit assessments required under this part, if the Secretary determines that such member's continued service would be detrimental to the achievement of the purposes of the Act.

If a position became vacant, nominations to fill the vacancy would be conducted using the nominations process as proposed in § 1214.41 of the Order. A vacancy would not be required to be filled if the unexpired term is less than six months.

Section 1214.44 of the proposed Order would specify procedures of the Board. A majority of the Board members (7) would constitute a quorum. If participation by telephone or other means were permitted, members participating by such means would count towards the quorum requirements or other voting requirements as authorized under the Order. Proxy voting would not be permitted. A motion would carry if supported by a majority of Board members present.

The proposed Order would also provide for the Board to take action by mail, telephone, electronic mail, facsimile, or any other electronic means when the chairperson believes it is necessary. Actions taken under these procedures would be valid only if all members and the Secretary were notified of the meeting and all members were provided the opportunity to vote and a majority of the members present voted in favor of the action. Additionally, all votes would have to be confirmed in writing and recorded in Board minutes.

Section 1214.45 of the proposed Order would specify that Board members or committee members would serve without compensation. However, Board members or committee members would be reimbursed for reasonable travel expenses, as approved by the Board, incurred when performing Board business.

Section 1214.46 of the proposed Order would specify powers and duties of the Board. These are similar to promotion programs authorized under the 1996 Act. They include, among other things, to administer the Order and collect assessments; to develop bylaws and recommend regulations necessary to administer the Order; to select a chairperson and other Board officers; to create an executive committee and form other committees and subcommittees as necessary; to hire staff or contractors; to provide appropriate notice of meetings to the industry and USDA and keep minutes of such meetings; to develop programs and enter into contracts to implement programs; to submit a budget to USDA for approval within 60 calendars days after assessments are due; to borrow funds necessary to cover startup costs of the Order; to invest Board funds appropriately; to recommend changes in the assessment rate as appropriate and within the limits of the Order; to have its books audited by an outside certified public accountant at the end of each fiscal period and at other times as requested by the Secretary; to report its activities to manufacturers for the U.S. market; to make public an accounting of funds received and expended; to receive, investigate and report to the Secretary complaints of violations of the Order; and to recommend amendments to the Order as appropriate.

Section 1214.47 of the proposed Order would specify prohibited activities that appear in other promotion programs authorized under the 1996 Act. In summary, neither the Board nor its employees and agents could engage in actions that would be a conflict of interest; use Board funds to lobby (influencing legislation or governmental action or policy, by local, state, national, and foreign governments or subdivisions thereof, other than recommending to the Secretary amendments to the Order); or engage in any advertising or activities that may be false, misleading or disparaging to another agricultural commodity.

Expenses and Assessments

Pursuant to sections 516 and 517 of the 1996 Act, §§ 1214.50 through 1214.56 of the proposed Order detail requirements regarding the Board's budget and expenses, financial statements, assessments, and exemption from assessments. Within 60 days after assessments are due to the Board, and as necessary during the year, the Board would submit a budget to USDA covering its projected expenses. The budget must include a summary of anticipated revenue and expenses for each program along with a breakdown of staff and administrative expenses. Except for the initial budget, the Board's budgets should include comparative data for at least one preceding fiscal period.

Assessments are due to the Board on February 15th of each crop year. Providing the Board sixty days after assessments are due to develop and submit a budget allow enough time for the budget to be approved prior to the beginning of the fiscal period (August 1). Also, this allows the Board to have knowledge of the monies available to develop promotion, research, or information programs for the upcoming fiscal period.

Each budget must provide for adequate funds to cover the Board's anticipated expenses. Any amendment or addition to an approved budget must be approved by USDA, including shifting of funds from one program, plan or project to another. Shifts of funds that do not result an increase in the Board's approved budget would not have to have prior approval from USDA. For example, if the Board's approved budget provided for $1 million in consumer advertising and $500,000 in research projects, a shift of $50,000 from consumer advertising to research would require USDA approval. However, a shift within the $1 million consumer advertising line item would not require prior USDA approval.

The Board would be authorized to incur reasonable expenses for its maintenance and functioning. During its first year of operation, the Board could borrow funds for startup costs and capital outlay. Any borrowed funds would be subject to the same fiscal, budget and audit controls as other funds of the Board.

The Board could also accept voluntary contributions and seek other funding sources to carry out activities authorized under the Order. Any contributions received by the Board would be free from encumbrances by the donor and the Board would retain control over use of the funds. However,

the Board could receive funds from outside sources targeted for specific authorized projects. For example, the Board could receive Federal grant funds, subject to approval by the Secretary, for a specific research project. The Board would also be required to reimburse USDA for costs incurred by USDA in overseeing the Order's operations, including all costs associated with referenda.

The Board would be limited to spending no more than 10 percent of its available funds for administration, maintenance, and the functioning of the Board. Reimbursements to USDA would not be considered administrative costs. As an example, if the Board received $2 million in assessments during a fiscal period, and had available $500,000 in reserve funds, the Board's available funds would be $2,500,000. In this scenario, the Board would be limited to spending no more than $250,000 (.10 × $2.5 million) on administrative costs. While section 515 of the 1996 Act limits such spending to 15 percent of a board's budget, the Task Force believes that 10 percent is appropriate.

The Board could also maintain a monetary reserve and carry over excess funds from one fiscal period to the next. However, such reserve funds could not exceed one fiscal period's budgeted expenses. For example, if the Board's budgeted expenses for a fiscal period were $2 million, it could carry over no more than $2 million in reserve. With approval of the Secretary, reserve funds could be used to pay expenses.

The Board could invest its revenue collected under the Order in the following: (1) Obligations of the United States or any agency of the United States; (2) general obligations of any State or any political subdivision of a State; (3) interest bearing accounts or certificates of deposit of financial institutions that are members of the Federal Reserve; and (4) obligations fully guaranteed as to principal interest by the United States.

The Board would be required to submit to USDA financial statements on a quarterly basis, or at any other time as requested by the Secretary. Financial statements should include, at a minimum, a balance sheet, an income statement, and an expense budget.

Assessments

The Board's programs and expenses would be funded through assessments on producers, importers, donations, other income, and other funds available to the Board. The Order would provide for an initial assessment rate of $0.15 per Christmas tree domestically produced or imported into the United States.

This assessment rate will be reviewed by the Board after the initial referendum is conducted (3 years after assessments first begin). The assessment rate cannot be changed during the first three years of operation of the Order. The assessment rate may be increased or decreased no more than 2 cents per Christmas tree during the fiscal period. Any change in the assessment rate within this range would be subject to rulemaking by the Secretary. The assessment rate shall not exceed 20 cents per Christmas tree, nor shall it be less than 10 cents per Christmas tree, unless a majority of producers and importers approve such other levels of assessments through a referendum conducted pursuant to this subpart.

The number of entities assessed under the program would be approximately 3,263. Estimated revenue is expected at $2 million of which 10 percent is expected from imported product and 90 percent from domestic product.

Producers would be required to pay their assessments owed to the Board by February 15th of each fiscal period. Importer assessments would be collected through Customs. The Order would specify a list of numbers of the Harmonized Tariff Schedule of the United States that would identify Christmas trees subject to assessments. If Customs did not collect the assessment from an importer, then the importer would be responsible for paying the assessment directly to the Board within 30 calendar days after importation.

The Order would provide authority for the Board to impose a late payment charge and interest for assessments overdue to the Board. The late payment charge and rate of interest would be prescribed in the Order's regulations issued by the Secretary.

Exemptions

The Order would provide for two exemptions. First, producers who produce domestically less than 500 Christmas trees or importers that import less than 500 Christmas trees during a fiscal period would be exempt from paying assessments. Producers or importers would apply to the Board for an exemption prior to the start of the fiscal period. This would be an annual exemption; entities would have to reapply each year. They would have to certify that they expect to produce domestically or import less than 500 Christmas trees for the applicable fiscal period. The Board could request past sales or import data to support the exemption request. The Board would then issue, if deemed appropriate, a certificate of exemption to the eligible producer or importer. Once approved, producers would not have to pay assessments to the Board for the applicable fiscal period. Approved importers would have their assessments as collected by Customs refunded by the Board within 60 calendar days after receipt of such assessments by the Board. No interest would be paid on the assessments collected by Customs.

Producers who did not apply to the Board for an exemption and domestically produced or imported less than 500 Christmas trees during the fiscal period would receive a refund from the Board for the applicable assessments within 30 calendar days after the end of the fiscal period. Producers who receive an exemption certificate but domestically produce or import more than 500 Christmas trees during the fiscal period would have to pay the Board the applicable assessments owed within 30 calendar days after the end of the fiscal period and submit any necessary reports to the Board.

The Board could develop additional procedures to administer the exemption as appropriate. Such procedures would be implemented through rulemaking by the Secretary.

The second exemption under the proposed Order would be for organic Christmas trees. A producer who operates under an approved National Organic Program (NOP) (7 CFR part 205) system plan, only domestically produces Christmas trees that are eligible to be labeled as 100 percent organic under the NOP, and is not a split operation would be exempt from payment of assessments. Likewise, an importer who imports only Christmas trees that is eligible to be labeled as 100 percent organic under the NOP and who does not import any nonorganic Christmas trees would be exempt from the payment of assessments.

Refunds

Pursuant to section 518 of the 1996 Act, section 1214.54 of the proposed Order would specify the refund procedures if the initial referendum does not pass. The Task Force has proposed that the proposed Order be voted in a referendum of producers and importers three years after assessments first begin under the Order. The Board shall establish an interest bearing escrow account with a financial institution that is a member of the Federal Reserve System and will deposit into such account an amount equal to 10 percent of the assessments collected during the period beginning on the

effective date of the Order and ending on the date the Secretary announces the results of the required referendum.

If the required referendum fails, the Board shall promptly pay refunds of assessments to all producers and importers that have paid assessments during the period beginning on the effective date of the Order and ending on the date the Secretary announces the results of the required referendum in the manner specified in the proposed Order. Producers and importers shall notify the Board, in a manner specified by the Secretary, within 30 days after the announcement of the referendum of their demand to receive a refund.

If the amount deposited in the escrow account is less than the amount of all refunds that producers and importers subject to the Order have a right to receive, the Board shall prorate the amount deposited in such account among all producers and importers who desire a refund of assessments paid no later than 90 days after the required referendum results are announced by the Secretary.

If the proposed Order is approved by the required referendum conducted under this section, the Board will close the escrow account and all funds will be available to the Board under section 1214.50.

Promotion, Research and Information

Pursuant to section 516 of the 1996 Act, §§ 1214.60 through 1214.62 of the proposed Order would detail requirements regarding promotion, research and information projects authorized under the Order. The Board would develop and submit to the Secretary for approval plans and programs regarding promotion, research, education, and other activities, including consumer and industry information and advertising designed to, among other things, build markets for Christmas trees, and enhance the image and reputation of Christmas trees. The Board would be required to evaluate each plan and program to ensure that it contributes to an effective promotion program. Christmas trees of all origins would have to be treated equally by the Board, and no program, plan, or project could be false, misleading, or disparage against another agricultural commodity.

The Order would also require that, at least once every five years, the Board fund an independent evaluation of the effectiveness of the Order and programs conducted by the Board. Finally, the Order would specify that any patents, copyrights, trademarks, inventions, product formulations and publications developed through the use of funds received by the Board would be the property of the U.S. Government, as represented by the Board. These along with any rents, royalties and the like from their use would be considered income subject to the same fiscal, budget, and audit controls as other funds of the Board, and could be licensed with approval of the Secretary.

Reports, Books and Records

Pursuant to section 515 of the 1996 Act, §§ 1214.70 through 1214.72 specify the reporting and recordkeeping requirements under the proposed Order as well as requirements regarding confidentiality of information.

Producers and importers would be required to submit periodically to the Board certain information as the Board may request. Specifically, producers and importers would submit a report to the Board that would include, but not be limited to, the producers' or importers' name and address; the number of trees produced or imported; the number of Christmas trees on which the assessment was paid; and the date the assessment was paid. Producers and importers would submit this report at the same time they remit their assessments to the Board. Producers or importers who received a certificate of exemption from the Board would not have to submit such a report to the Board. Importers who paid their assessments through Customs would not have to submit such reports to the Board because Customs would collect this information upon entry. However, exempt producers or importers who domestically produced or imported over the exemption threshold of 500 Christmas trees during the fiscal period would have to submit such reports to the Board with the payment of assessments as specified in § 1214.53.

The Board would have the flexibility to request additional information from producers and importers as deemed appropriate to administer the Order. Additionally, producers and importers, including those who were exempt, would be required to maintain books and records needed to verify any required reports. Such books and records must be made available during normal business hours for inspection by the Board's or USDA's employees or agents. Producers and importers would be required to maintain such books and records for two years beyond the applicable fiscal period.

The Order would also require that all information obtained from persons subject the Order as a result of proposed recordkeeping and reporting requirements would be kept confidential by all officers, employees, and agents of the Board and USDA. Such information could only be disclosed if the Secretary considered it relevant, and the information were revealed in a judicial proceeding or administrative hearing brought at the direction or at the request of the Secretary or to which the Secretary or any officer of USDA were a party. Other exceptions for disclosure of confidential information would include the issuance of general statements based on reports or on information relating to a number of persons subject to the Order, if the statements did not identify the information furnished by any person, or the publication, by direction of the Secretary, of the name of any person violating the Order and a statement of the particular provisions of the Order violated.

Miscellaneous Provisions

Referenda

Pursuant to section 518 of the 1996 Act, § 1214.81(a)(1) of the proposed Order specifies that the program would be implemented and a referendum conducted three years after assessments first begin under the Order. The Order would not continue unless it is approved by a majority of those persons voting in the referendum for approval.

Section 1214.81(b) of the proposed Order specifies criteria for subsequent referenda. Under the Order, a referendum would be held to ascertain whether the program should continue, be amended, or be terminated. This section specifies that a referendum would be held every seven years to determine whether producers and importers favor continuation of the Order. The Order would continue if favored by a majority of producers and importers voting in the referendum.

Additionally, a referendum could be conducted at the request of the Board. A referendum could also be conducted at the request of 10 percent or more of the number of persons eligible to vote in a referendum under the Order. Finally, a referendum could be conducted at any time as determined by the Secretary.

Other Miscellaneous Provisions

Section 1214.80 and §§ 1214.82 through 1214.88 describe the rights of the Secretary; authorize the Secretary to suspend or terminate the Order when deemed appropriate; prescribe proceedings after termination; address personal liability, separability, and amendments; and provide OMB control numbers. These provisions are common to all research and promotion programs authorized under the 1996 Act.

Initial Regulatory Flexibility Act Analysis

In accordance with the Regulatory Flexibility Act (RFA) (5 U.S.C. 601–612), AMS is required to examine the impact of the proposed rule on small entities. Accordingly, AMS has considered the economic impact of this action on small entities.

The purpose of the RFA is to fit regulatory actions to the scale of businesses subject to such actions so that small businesses will not be disproportionately burdened. The Small Business Administration defines, in 13 CFR part 121, small agricultural producers as those having annual receipts of no more than $750,000 and small agricultural service firms (producers and importers) as those having annual receipts of no more than $7.0 million.

Under these criteria, the majority of the producers that would be affected by this Proposed Order would be considered small entities, while most importers would not. Producers and importers who domestically produce or imported less than 500 Christmas trees annually would be exempt from the assessment. Organic producers and importers also would be exempt from assessments. The number of entities assessed under the program would be approximately 3,263. Estimated revenue is expected at $2 million of which 10 percent is expected from imported product and 90 percent from domestic product.

According to the Task Force, based on data from the 2007 Census of Agriculture, there were approximately 12,255 Christmas tree farms that produced Christmas trees in the United States. Approximately 25 percent of the producers, or 3,100 Christmas tree producers, would be subject to the assessment based on the exemption of those producing less than 500 trees would be exempt from assessments. Approximately 95 percent of these producers subject to the assessment would be considered small entities under SBA criteria. During 2007, 47 out of 50 States produced Christmas trees in the United States. Oregon, Michigan, Wisconsin, North Carolina, and Pennsylvania together produced more than 75 percent of the trees produced in 2007. In 2008, there were approximately 200 importers. Based on the 2008 U.S. Customs data, 163 importers that imported more than 500 Christmas trees would be subject to the assessment rate under the proposed Order.

This proposed rule invites comments on a proposed industry-funded research, promotion, and information program for fresh cut Christmas trees. The program would be financed by an assessment on Christmas tree producers and importers and would be administered by a board of industry members selected by the Secretary. The initial assessment rate would be $0.15 per Christmas tree domestically produced or imported to the United States and could be increased to $0.20 per Christmas tree. Entities that domestically produce or import less than 500 Christmas trees within a crop year would be exempt. The purpose of the program would be to strengthen the position of Christmas trees in the marketplace, and maintain and expand markets for Christmas trees. A referendum would be held among eligible producers and importers to determine whether they favor implementation of the program three years after the first assessments begin. The Order would continue if favored by a majority of producers and importers voting in the referendum. The program is authorized under the 1996 Act.

Regarding the economic impact of the proposed Order on affected entities, Christmas tree producers and importers would be required to pay assessments to the Board. As previously mentioned, the initial assessment rate would be $0.15 per Christmas tree domestically produced or imported to the United States and could be increased to no more than $0.20 per Christmas tree.

Regarding the impact on the industry as a whole, the proposed program is expected to help stabilize prices and grow demand for fresh cut Christmas trees. The Christmas tree industry hopes to achieve a stable funding base to promote Christmas now and into the future.

Regarding alternatives, the Christmas tree industry has already considered and implemented voluntary programs, but based on past experience, these programs only worked in the short term; until monies were depleted.

This action would impose additional reporting and recordkeeping burden on producers and importers of fresh cut Christmas trees. Producers and importers interested in serving on the Board may be asked to submit a nomination form to the Board indicating their desire to serve or nominating another industry member to serve on the Board. Interested persons would also submit a background statement outlining their qualifications to serve on the Board. Producers and importers would have the opportunity to cast a ballot and vote for candidates to serve on the Board. Producer and importer nominees to the Board would have to submit a background form to the Secretary to ensure they are qualified to serve on the Board.

Additionally, producers and importers who domestically produce or import less than 500 Christmas trees annually could submit a request to the Board for an exemption from paying assessments on this volume. Producers and importers also would report regarding their sales/imports that would accompany their assessments paid to the Board. Producers and importers who would qualify as 100 percent organic under the NOP could submit a request to the Board for an exemption from assessments.

Finally, producers and importers who wanted to participate in a referendum to vote on whether the Order should continue would have to complete a ballot for submission to the Secretary. These forms are being submitted to OMB for approval under OMB Control No. 0581–NEW. Specific burdens for the forms are detailed later in this document in the section titled Paperwork Reduction Act. As with all Federal promotion programs, reports and forms are periodically reviewed to reduce information requirements and duplication by industry and public sector agencies. Finally, USDA has not identified any relevant Federal rules that duplicate, overlap, or conflict with this proposed rule.

AMS is committed to complying with the E-Government Act, to promote the use of the Internet and other information technologies to provide increased opportunities for citizen access to Government information and services, and for other purposes.

Regarding outreach efforts, as previously mentioned, the Task Force conducted sessions throughout the United Sates in different States and regions. These were held in conjunction with regional and state organization meetings. Approximately 50 sessions were held across the United States. Input regarding the proposed program was incorporated into the Task Force's proposal.

Paperwork Reduction Act

In accordance with the Paperwork Reduction Act of 1995 (44 U.S.C. chapter 35), AMS announces its intention to request an approval of a new information collection and recordkeeping requirements for the proposed Christmas tree program.

Title: Research and Promotion Background Information.

OMB Number for background form AD–755: (Approved under OMB No. 0505–0001).

Expiration Date of Approval: Awaiting renewal.

Title: National Research, Promotion, and Consumer Information Programs.

OMB Number: 0581–NEW.

Expiration Date of Approval: 7/31/2012.

Type of Request: New information collection for research and promotion programs.

Abstract: The information collection requirements in the request are essential to carry out the intent of the 1996 Act. The information collection concerns a proposal received by USDA for a national research and promotion program for the Christmas tree industry. The program would be financed by an assessment on Christmas tree producers and importers and would be administered by a board of industry members selected by the Secretary. The program would provide for an exemption for producers and importers that domestically produce or import less than 500 Christmas trees during the year. A referendum would be held among eligible producers and importers to determine whether they favor continuation of the program three years after assessments first begin. The purpose of the program would be to help increase demand for fresh cut Christmas trees.

In summary, the information collection requirements under the program concern Board nominations, refunds of assessments, exemption applications, and the collection of assessments. For Board nominations, producers and importers interested in serving on the Board would be asked to submit a "Nomination Form" to the Board indicating their desire to serve or to nominate another industry member to serve on the Board. Producers and importers would have the opportunity to submit a "Nomination Ballot" to the Board where they would vote for candidates to serve on the Board. Nominees would also have to submit a background information form, "AD–755," to the Secretary to ensure they are qualified to serve on the Board.

Regarding assessments, producers and importers who domestically produce or import less than 500 Christmas trees annually could submit a request, "Application for Exemption from Assessments," to the Board for an exemption from paying assessments. Producers and importers may be asked to submit a "Sales/Import Report" that would accompany their assessments paid to the Board and report the quantity of Christmas trees domestically produced or imported during the applicable period, the quantity for which assessments were paid, and the port of entry (for imports). As previously mentioned, the majority of importer assessments would be collected by Customs. Customs would remit the funds to the Board along with this information. Finally, producers and importers who would qualify as 100 percent organic under the NOP could submit an "Organic Exemption Form" to the Board and request an exemption from assessments.

Producers and importers would also file a form to request a refund of assessments paid if the referendum fails to pass. A referendum is proposed to be conducted three years after the assessments first begin to determine if producers and importers favor the continuance of the Order.

There would also be an additional burden on producers and importers voting in referenda. The referendum ballot, which represents the information collection requirement relating to referenda, is addressed in a proposed rule on referendum procedures which is published separately in this issue of the **Federal Register**.

Information collection requirements that are included in this proposal include:

(1) Background Information Form AD–755 (OMB Form No. 0505–0001)

Estimate of Burden: Public recordkeeping burden for this collection of information is estimated to average 0.5 hour per application.

Respondents: Producers and importers.

Estimated Number of Respondents: 8 (24 for initial nominations to the Board, 8 in subsequent years).

Estimated Number of Responses per Respondent: 1 every 3 years (0.3).

Estimated Total Annual Burden on Respondents: 12 hours for the initial nominations to the Board and 4 hours annually thereafter.

(2) Sales/Import Report by Each Producer or Importer of Christmas Trees

Estimate of Burden: Public reporting burden for this collection of information is estimated to average 0.5 hours per producer reporting on Christmas trees produced.

Respondents: Producers and importers.

Estimated Number of Respondents: 3,110.

Estimated Number of Responses per Respondent: 1.

Estimated Total Annual Burden on Respondents: 1,555 hours.

(3) An Exemption Application for Producers and Importers Who Are Exempt From Assessments

Estimate of Burden: Public reporting burden for this collection of information is estimated to average 0.25 hours per producers or importer reporting on Christmas trees sold or imported. Upon approval of an application, producers and importers will receive exemption certification.

Respondents: Exempt producers and importers.

Estimated Number of Respondents: 9,192.

Estimated Number of Responses per Respondent: 1.

Estimated Total Annual Burden on Respondents: 2,298 hours.

(4) Application for Reimbursement of Assessment

Estimate of Burden: Public reporting burden for this collection of information is estimated to average 0.25 hours per request for reimbursement.

Respondents: Importers.

Estimated Number of Respondents: 37.

Estimated Number of Responses per Respondent: 1.

Estimated Total Annual Burden on Respondents: 9.25 hours.

(5) A Requirement To Maintain Records Sufficient To Verify Reports Submitted Under the Order

Estimate of Burden: Public recordkeeping burden for keeping this information is estimated to average 0.5 hours per recordkeeper maintaining such records.

Recordkeepers: Producers and importers.

Estimated Number of Recordkeepers: 12,455.

Estimated Total Recordkeeping Hours: 6,227.5 hours.

(6) Nomination Form

Estimate of Burden: Public recordkeeping burden for this collection of information is estimated to average 0.25 hours per application.

Respondents: Producers and importers.

Estimated Number of Respondents: 40.

Estimated Number of Responses per Respondent: 1.

Estimated Total Annual Burden on Respondents: 10.00 hours.

(7) Background Statement

Estimate of Burden: Public recordkeeping burden for this collection of information is estimated to average 0.25 hour per application.

Respondents: Producers and importers.

Estimated Number of Respondents: 40.

Estimated Number of Responses per Respondent: 1.

Estimated Total Annual Burden on Respondents: 10.00.

(8) Nomination Ballot

Estimate of Burden: Public recordkeeping burden for this collection of information is estimated to average 0.25 hours per application.

Respondents: Producers and importers.

Estimated Number of Respondents: 1,200.

Estimated Number of Responses per Respondent: 1.

Estimated Total Annual Burden on Respondents: 300 hours.

(9) Organic Exemption Form

Estimate of Burden: Public recordkeeping burden for this collection of information is estimated to average 0.5 hours per exemption form.

Respondents: Producers and importers.

Estimated Number of Respondents: 5.

Estimated Number of Responses per Respondent: 1.

Estimated Total Annual Burden on Respondents: 2.5 hours.

(10) Application for Refund Form

Estimate of Burden: Public recordkeeping burden for this collection of information is estimated to average 0.5 hours per refund form.

Respondents: Producers, importers and organic producers and importers.

Estimated Number of Respondents: 325.

Estimated Number of Responses per Respondent: 1.

Estimated Total Annual Burden on Respondents: 162.5.

As noted above, under the proposed program, producers and importers would be required to pay assessments and file reports with and submit assessments to the Board (importers through Customs). While the proposed Order would impose certain recordkeeping requirements on producers and importers, information required under the proposed Order could be compiled from records currently maintained. Such records shall be retained for at least two years beyond the marketing year of their applicability.

An estimated 12,455 respondents would provide information to the Board (12,255 producers and 200 importers). The estimated cost of providing the information to the Board by respondents would be $348,975. This total has been estimated by multiplying 10,575 total hours required for reporting and recordkeeping by $33, the average mean hourly earnings of various occupations involved in keeping this information. Data for computation of this hourly rate was obtained from the U.S. Department of Labor Statistics.

The proposed Order's provisions have been carefully reviewed, and every effort has been made to minimize any unnecessary recordkeeping costs or requirements, including efforts to utilize information already submitted under other programs administered by USDA and other state programs.

The proposed forms would require the minimum information necessary to effectively carry out the requirements of the program, and their use is necessary to fulfill the intent of the 1996 Act. Such information can be supplied without data processing equipment or outside technical expertise. In addition, there are no additional training requirements for individuals filling out reports and remitting assessments to the Board. The forms would be simple, easy to understand, and place as small a burden as possible on the person required to file the information.

Collecting information quarterly would coincide with normal industry business practices. The timing and frequency of collecting information are intended to meet the needs of the industry while minimizing the amount of work necessary to fill out the required reports. The requirement to keep records for two years is consistent with normal industry practices. In addition, the information to be included on these forms is not available from other sources because such information relates specifically to individual producers and importers who are subject to the provisions of the 1996 Act. Therefore, there is no practical method for collecting the required information without the use of these forms.

Request for Public Comment Under the Paperwork Reduction Act

Comments are invited on: (a) Whether the proposed collection of information is necessary for the proper performance of functions of the proposed Order and USDA's oversight of the proposed Order, including whether the information would have practical utility; (b) the accuracy of USDA's estimate of the burden of the proposed collection of information, including the validity of the methodology and assumptions used; (c) the accuracy of USDA's estimate of the principal producing areas in the United States for Christmas trees; (d) the accuracy of USDA's estimate of the number of producers and importers of Christmas trees that would be covered under the program; (e) ways to enhance the quality, utility, and clarity of the information to be collected; and (f) ways to minimize the burden of the collection of information on those who are to respond, including the use of appropriate automated, electronic, mechanical, or other technological collection techniques or other forms of information technology.

Comments concerning the information collection requirements contained in this action should reference OMB No. 0581–NEW. In addition, the docket number, date, and page number of this issue of the **Federal Register** also should be referenced. Comments should be sent to the same addresses referenced in the **ADDRESSES** section of this proposed rule.

OMB is required to make a decision concerning the collection of information contained in this proposed rule between 30 and 60 days after publication. Therefore, a comment to OMB is best assured of having its full effect if OMB receives it within 30 days of publication.

USDA made modifications to the proponent's proposal to conform with other similar national research and promotion programs implemented under the 1996 Act.

While the proposal set forth below has not received the approval of USDA, it is determined that this proposed Order is consistent with and would effectuate the purposes of the 1996 Act.

A 90-day comment period is provided to allow interested persons to respond to this proposal. All written comments received in response to this proposed rule by the date specified will be considered prior to finalizing this action.

List of Subjects in 7 CFR Part 1214

Administrative practice and procedure, Advertising, Consumer information, Marketing agreements, Christmas trees promotion, Reporting and recordkeeping requirements.

For the reasons set forth in the preamble, it is proposed that Title 7, Chapter XI of the Code of Federal Regulations be amended by adding part 1214 to read as follows:

PART 1214—CHRISTMAS TREE PROMOTION, RESEARCH, AND INFORMATION ORDER

Subpart A—Christmas Tree Promotion, Research, and Information Order

Definitions

Sec.
1214.1 Act.
1214.2 Board.
1214.3 Christmas tree.
1214.4 Conflict of interest.
1214.5 Crop year.
1214.6 Customs.

1214.7 Department.
1214.8 Fiscal period.
1214.9 Importer.
1214.10 Information.
1214.11 Marketing.
1214.12 Order.
1214.13 Part and subpart.
1214.14 Person.
1214.15 Programs, plans, and projects.
1214.16 Produce.
1214.17 Producer.
1214.18 Promotion.
1214.19 Research.
1214.20 Secretary.
1214.21 State.
1214.22 Suspend.
1214.23 Terminate.
1214.24 United States.

Christmas Tree Promotion Board

1214.40 Establishment and membership.
1214.41 Nominations and appointments.
1214.42 Term of office.
1214.43 Vacancies.
1214.44 Procedure.
1214.45 Compensation and reimbursement.
1214.46 Powers and duties.
1214.47 Prohibited activities.

Expenses and Assessments

1214.50 Budget and expenses.
1214.51 Financial statements.
1214.52 Assessments.
1214.53 Exemption from and refunds of assessments.
1214.54 Refund escrow accounts.
1214.55 Refunds.
1214.56 Procedures for obtaining a refund.

Promotion, Research, and Information

1214.60 Programs, plans, and projects.
1214.61 Independent evaluation.
1214.62 Patents, copyrights, trademarks, information, publications, and product formulations.

Reports, Books, and Records

1214.70 Reports.
1214.71 Books and records.
1214.72 Confidential treatment.

Miscellaneous

1214.80 Right of the Secretary.
1214.81 Referenda.
1214.82 Suspension and termination.
1214.83 Proceedings after termination.
1214.84 Effect of termination or amendment.
1214.85 Personal liability.
1214.86 Separability.
1214.87 Amendments.
1214.88 OMB control numbers.

Subpart B—[Reserved]

Authority: 7 U.S.C. 7411–7425; 7 U.S.C. 7401.

Subpart A—Christmas Tree Promotion, Research, and Information Order

Definitions

§ 1214.1 Act.

Act means the Commodity Promotion, Research, and Information Act of 1996 (7 U.S.C. 7411–7425), and any amendments thereto.

§ 1214.2 Board.

Board or the Christmas Tree Promotion Board means the administrative body established pursuant to § 1214.40.

§ 1214.3 Christmas tree.

Christmas tree means any tree of the coniferous species, that is severed or cut from its roots and marketed as a Christmas tree for holiday use.

§ 1214.4 Conflict of interest.

Conflict of interest means a situation in which a member or employee of the Board has a direct or indirect financial interest in a person who performs a service for, or enters into a contract with, the Board for anything of economic value.

§ 1214.5 Crop year.

Crop year means the period August 1 through July 31.

§ 1214.6 Customs.

Customs means the United States Customs and Border Protection or U.S. Customs Service, an agency of the United States Department of Homeland Security.

§ 1214.7 Department.

Department means the United States Department of Agriculture or any officer or employee of the Department to whom authority has heretofore been delegated, or to whom authority may hereafter be delegated, to act in the Secretary's stead.

§ 1214.8 Fiscal period.

Fiscal period means the period August 1 through July 31.

§ 1214.9 Importer.

Importer means any person importing Christmas trees into the United States in a fiscal period as a principal or as an agent, broker, or consignee of any person who domestically produces Christmas trees outside of the United States for sale in the United States, and who is listed in the import records as the importer of record for such Christmas trees.

§ 1214.10 Information.

Information means information, program, and activities that are designed to increase efficiency in processing, enhance the development of new markets and marketing strategies, increase market efficiency, and enhance the image of Christmas trees and the Christmas tree industry in the United States.

§ 1214.11 Marketing.

Marketing means to sell or otherwise dispose of Christmas trees in interstate, foreign or intrastate commerce.

§ 1214.12 Order.

Order means an order issued by the Secretary under section 514 of the Act that provides for a program of generic promotion, research, and information regarding agricultural commodities authorized under the Act.

§ 1214.13 Part and subpart.

Part means the Christmas Tree Promotion, Research, and Information Order and all rules, regulations, and supplemental orders issued pursuant to the Act and the Order. The Order shall be a subpart of such part.

§ 1214.14 Person.

Person means any individual, group of individuals, partnership, corporation, association, cooperative, or any other legal entity.

§ 1214.15 Programs, plans, and projects.

Programs, plans and projects mean those research, promotion and information programs, plans, or projects established pursuant to this Order.

§ 1214.16 Produce.

Produce means to engage in the cutting and selling of Christmas trees for the holiday market.

§ 1214.17 Producer.

Producer means any person who is engaged in the production of Christmas trees in the United States, and who owns, or shares the ownership and risk of loss of the production of Christmas trees or a person who is engaged in the business of producing, or causing to be domestically produced, Christmas trees beyond personal use and having value at first point of sale.

§ 1214.18 Promotion.

Promotion means any action, including paid advertising and public relations that presents a favorable image of Christmas trees to the general public with the intent of improving the perception and competitive position of Christmas trees and stimulating sales of Christmas trees.

§ 1214.19 Research.

Research means any type of test, systematic study, study, investigation, analysis and/or evaluation designed to advance the image, desirability, use, marketability, quality, product development, or production of Christmas trees, including but not limited to research related to cost of production, market development, testing the effectiveness of market development and promotional efforts, new species of Christmas trees and environmental issues relating to the Christmas tree industry.

§ 1214.20 Secretary.

Secretary means the Secretary of Agriculture of the United States, or any officer or employee of the Department to whom authority has been delegated, or to whom authority may be delegated, to act in the Secretary's stead.

§ 1214.21 State.

State means any of the several 50 States of the United States, the District of Columbia, the Commonwealth of Puerto Rico, and the territories and possessions of the United States.

§ 1214.22 Suspend.

Suspend means to issue a rule under section 553 of title 5 U.S.C. to temporarily prevent the operation of an order or part thereof during a particular period of time specified in the rule.

§ 1214.23 Terminate.

Terminate means to issue a rule under section 553 of title 5 U.S.C. to cancel permanently the operation of an order or part thereof beginning on a certain date specified in the rule.

§ 1214.24 United States.

United States means collectively the 50 states, the District of Columbia, the Commonwealth of Puerto Rico, and the territories and possessions of the United States.

Christmas Tree Promotion Board

§ 1214.40 Establishment and membership.

(a) *Establishment of the Christmas Tree Promotion Board.* There is hereby established a Christmas Tree Promotion Board, composed of no more than twelve (12) members as follows:

(1) Producer members from each of the following regions:

(i) Five producer members from Region #1—Western Region (states from the Pacific Ocean east to the Rocky Mountains): Alaska, Arizona, California, Colorado, Hawaii, Idaho, Montana, Nevada, New Mexico, Oregon, Utah, Washington, Wyoming and all U.S. Territories located in the Pacific Ocean.

(ii) Two producer members from Region #2—Central Region (states east of the Rocky Mountains to the Great Lakes): Arkansas, Illinois, Indiana, Iowa, Kansas, Michigan, Minnesota, Missouri, Nebraska, North Dakota, Ohio, Oklahoma, South Dakota, Texas, and Wisconsin.

(iii) Four producer members from Region #3—Eastern Region (states east of the Great Lakes): Alabama, Connecticut, Delaware, Florida, Georgia, Kentucky, Louisiana, New York, Maine, Maryland, Massachusetts, Mississippi, New Hampshire, New Jersey, North Carolina, Pennsylvania, Rhode Island, South Carolina, Tennessee, Virginia, Vermont, Washington, D.C., West Virginia, and all U.S. Territories located in the Atlantic Ocean and Caribbean Sea, including but not limited to Puerto Rico.

(2) One Importer member.

(b) *Adjustment of membership.* At least once every five years upon implementation of the Order, but not more frequently than once every three years, the Board will review the geographic distribution of United States production of Christmas trees and the quantity and source of Christmas tree imports. The review will be conducted through State crop production figures and Board assessment records, including the amount of assessments collected from importers, or other government data. If warranted, the Board will recommend to the Secretary that membership on the Board be altered to reflect any changes in geographic distribution of domestic Christmas tree production and the quantity of imports. *Provided,* that there shall be at least one importer member on the Board. Such adjustments shall not increase the total number of Board members. The adjustments to the Board membership would be submitted to the Secretary by Board recommendation and be implemented by the Secretary through rulemaking.

§ 1214.41 Nominations and appointments.

(a) Voting for producer members will be made by mail ballot, electronic mail, in person, or by facsimile.

(b) Nominations for the initial Board will be conducted by the Department. Subsequent nominations will be conducted by the Board.

(c) The Board shall outreach to all segments of the Christmas tree industry and solicit nominations as described in paragraphs (d) and (e) of this section. Nominees must domestically produce or import more than 500 Christmas trees during the most recent fiscal period.

(d) Nomination of producer members will be conducted by the Board. The Board staff will seek nominations for each vacant producer seat from each region from producers who have paid their assessments to the Board in the most recent fiscal period. Producers who produce Christmas trees in more than one region may seek nomination only in the region in which they produce the majority of their Christmas trees. For selection to the initial Board, the Secretary would notify producers to request nominations to the Board. Subsequent nominations will be submitted to the Board office and placed on a ballot that will be sent to producers in each region for a vote. Producers who produce Christmas trees in more than one region may only vote in the region in which they produce the majority of their Christmas trees. The nominee receiving the highest number of votes and the nominee receiving the second highest number of votes shall be submitted to the Department as the producers' first and second choice nominees. The Board shall submit nominations to the Secretary not less than 90 days prior to the expiration of the term of office.

(e) Nominations for the importer member(s) will be conducted by the Board. The Board will solicit importer nominations from those importers who have paid their assessments to the Board in the most recent fiscal period. For selection to the initial Board, the Secretary would notify importers to request nominations to the Board. Subsequent nominations will be submitted to the Board office and placed on a ballot that will be sent to importers for a vote. The Board shall submit those nominations to the Secretary not less than 90 days prior to the expiration of the term of office. Two nominees for each importer position will be submitted to the Secretary for consideration.

(f) From the nominations, the Secretary shall select the members of the Board for each position on the Board. Members will serve until their successors have been appointed by the Secretary.

§ 1214.42 Term of office.

Board members will serve for a term of three years and be able to serve a maximum of two consecutive three-year terms. When the Board is first established, the members will be assigned initial terms of two, three, and four years. Initial terms will be staggered to assure continuity of the Board. The term of office will begin on January 1 and conclude on December 31. Members serving the initial term of two and four years will be eligible to serve a second term of three years. Thereafter, each of the positions will carry a full three year term. Board members shall serve during the term of office for which they have been appointed and qualified, and until their successors are appointed and have qualified.

§ 1214.43 Vacancies.

(a) In the event that any member of the Board ceases to be a member of the category of membership from which the member was appointed to the Board, such position shall automatically become vacant.

(b) If a member of the Board consistently refuses to perform the duties of a member of the Board, or if a member of the Board engages in acts of dishonesty or willful misconduct, the Board may recommend to the Secretary that the member be removed from office. If the Secretary finds the recommendation of the Board shows adequate cause, the Secretary may remove such member from office. Further, without recommendation of the Board, a member may be removed by the Secretary upon showing of adequate cause, including the failure by a member to submit reports or remit assessments required under this part, if the Secretary determines that such member's continued service would be detrimental to the achievement of the purposes of the Act.

(c) Should any member position become vacant, successors for the unexpired terms of such member shall be appointed in the manner specified in § 1214.41. A vacancy will not be required to be filled if the unexpired term is less than six months.

§ 1214.44 Procedure.

(a) At a Board meeting, it will be considered a quorum when a majority of the Board members is present.

(b) All Board members will receive a minimum of 14 days advance notice of all Board and committee meetings, except when emergency circumstances exist and meetings need to be held prior to the advance notice.

(c) Each member of the Board will be entitled to one vote on any matter put to the Board. For any action of the Board to pass, at least a majority of the Board members present must vote in support of such action.

(d) The Board may appoint committees as necessary. It will be considered a quorum at a committee meeting when at least a majority of those appointed to the committee are present. Committees may consist of persons other than Board members, and such persons may vote in committee meetings as the Board shall determine. These committee members shall serve without compensation, but shall be reimbursed for reasonable travel expenses, as approved by the Board.

(e) In lieu of voting at a properly convened meeting, and when, in the opinion of the Board's chairperson, such action is considered necessary, the Board may take action by mail, telephone, electronic mail, facsimile, or any other means of communication. Any action taken under this procedure is valid only if:

(1) All members and the Secretary are notified and the members are provided the opportunity to vote;

(2) A majority of the members vote in favor of the action; and

(3) All votes are promptly confirmed in writing and recorded in the Board minutes.

(f) There shall be no voting by proxy.

(g) The chairperson shall be a voting member.

§ 1214.45 Compensation and reimbursement.

The members of the Board shall serve without compensation but shall be reimbursed for reasonable travel expenses, as approved by the Board, incurred by them in the performance of their duties as Board members.

§ 1214.46 Powers and duties.

The Board shall have the following powers and duties:

(a) To administer the Order in accordance with its terms and conditions and to collect assessments;

(b) To develop and recommend to the Secretary for approval such bylaws as may be necessary for the functioning of the Board, and such rules as may be necessary to administer the Order, including activities authorized to be carried out under the Order;

(c) To meet, organize, and select from among the members of the Board a chairperson, other officers, committees, and subcommittees, as the Board determines to be appropriate, provided that the committee and subcommittee members may also include individuals other than Board members;

(d) To notify producers and importers of all Board meetings through press releases or other means;

(e) To give the Secretary the same notice of meetings of the Board and committees as is given to members, including committee members if committee members are not members of the Board, in order that the Secretary's representative(s) may attend such meetings, and to keep and report minutes of each meeting of the Board and all committees to the Secretary;

(f) To appoint and convene, from time to time, committees that may include importers, exporters, producers or other members of the Christmas tree industry and public to assist in the development of research, promotion, advertising, and information programs for Christmas trees;

(g) To employ persons, other than members, as the Board considers necessary to assist the Board in carrying out its duties and to determine the compensation and specify the duties of such persons;

(h) To act as intermediary between the Secretary and any producer or importer;

(i) To furnish to the Secretary any information or records that the Secretary may request;

(j) To receive, investigate, and report to the Secretary complaints of violations of the Order;

(k) To maintain such records and books and prepare and submit such reports and records from time to time to the Secretary as the Secretary may require and to make the records available to the Secretary for inspection and audit; to make appropriate accounting with respect to the receipt and disbursement of all funds entrusted to it; and to keep records that accurately reflect the actions and transactions of the Board;

(l) To recommend to the Secretary such amendments to the Order as the Board considers appropriate;

(m) To develop and carry out generic promotion, research, and information activities relating to Christmas trees;

(n) To work to achieve an effective, continuous, and coordinated program of promotion, research, evaluation, and information designed to strengthen the Christmas tree industry's position in the marketplace; maintain and expand existing markets for Christmas trees; and to carry out programs, plans, and projects designed to provide maximum benefits to the Christmas tree industry;

(o) To develop programs, plans, and projects, and enter into contracts or agreements, which must be approved by the Secretary before becoming effective, for the development and carrying out of programs or projects of research, information, or promotion, and the payment of costs thereof with funds collected pursuant to this subpart. Each contract or agreement shall provide that any person who enters into a contract or agreement with the Board shall develop and submit to the Board a proposed activity; keep accurate records of all of its transactions relating to the contract or agreement; account for funds received and expended in connection with the contract or agreement; make periodic reports to the Board of activities conducted under the contract or agreement; and make such other reports available as the Board or the Secretary considers necessary. Any contract or agreement shall provide that:

(1) The contractor or agreeing party shall develop and submit to the Board a program, plan, or project together with a budget or budgets that shall show the estimated cost to be incurred for such program, plan, or project;

(2) The contractor or agreeing party shall keep accurate records of all its transactions and make periodic reports

to the Board of activities conducted, submit accounting for funds received and expended, and make such other reports as the Secretary or the Board may require;

(3) The Secretary may audit the records of the contracting or agreeing party periodically; and

(4) Any subcontractor who enters into a contract with a Board contractor and who receives or otherwise uses funds allocated by the Board shall be subject to the same provisions as the contractor;

(p) To prepare and submit for approval of the Secretary, within 60 days after assessments are due to the Board, rates of assessment and a fiscal period budget of the anticipated expenses to be incurred in the administration of the Order, in accordance with § 1214.50;

(q) To borrow funds necessary for the startup expenses of the order;

(r) To invest assessments collected under this part in accordance with § 1214.50;

(s) To pay the cost of the activities with assessments collected under § 1214.52;

(t) To recommend adjustments to the assessments as provided in § 1214.52;

(u) To periodically prepare, make public and to make available to producers and importers, reports of its activities and, at least once each fiscal period, to make public an accounting of funds received and expended; and

(v) To cause its books to be audited by an independent certified public accountant at the end of each fiscal period and at such other times as the Secretary may request, and to submit a report of the audit directly to the Secretary.

§ 1214.47 Prohibited activities.

The Board may not engage in, and shall prohibit the employees and agents of the Board from engaging in:

(a) Any action that would be a conflict of interest;

(b) Using funds collected by the Board under the Order to undertake any action for the purpose of influencing legislation or governmental action or policy, by local, state, national, and foreign governments or any subdivision thereof, other than recommending to the Secretary amendments to the Order; and

(c) No program, plan, or project including advertising shall be false or misleading or disparaging to another agricultural commodity. Christmas trees of all origins shall be treated equally.

Expenses and Assessments

§ 1214.50 Budget and expenses.

(a) Within 60 days after assessments are due to the Board, and as may be necessary thereafter, the Board shall prepare and submit to the Secretary a budget for the fiscal period covering its anticipated expenses and disbursements in administering this part. Each budget shall include:

(1) A statement of objectives and strategy for each program, plan, or project;

(2) A summary of anticipated revenue, with comparative data or at least one preceding year, except for the initial budget;

(3) A summary of proposed expenditures for each program, plan, or project; and

(4) Staff and administrative expense breakdowns, with comparative data for at least one preceding year, except for the initial budget.

(b) Each budget shall provide adequate funds to defray its proposed expenditures and to provide for a reserve as set forth in this part.

(c) Subject to this section, any amendment or addition to an approved budget must be approved by the Secretary, including shifting funds from one program, plan, or project to another.

(d) The Board is authorized to incur such expenses, including provision for a reserve, as the Secretary finds are reasonable and likely to be incurred by the Board for its maintenance and functioning, and to enable it to exercise its powers and perform its duties in accordance with the provisions of this part. Such expenses shall be paid from funds received by the Board.

(e) With approval of the Secretary, the Board may borrow money for the payment of administrative expenses, subject to the same fiscal, budget, and audit controls as other funds of the Board. Any such funds borrowed by the Board shall be expended for startup costs and are limited to the first year of operation of the Board.

(f) The Board may accept voluntary contributions, but these shall only be used to pay expenses incurred in the conduct of programs, plans, and projects approved by the Secretary. Such contributions shall be free from any encumbrance by the donor and the Board shall retain complete control of their use.

(g) In accordance with § 1214.54, the Board shall deposit funds in a refund escrow account and shall not use such funds for expenses, except as provided for in that section.

(h) The Board may also receive funds provided through the Department's Foreign Agricultural Service or from other sources, with the approval of the Secretary, for authorized activities.

(i) The Board shall reimburse the Secretary for all expenses incurred by the Secretary in the implementation, administration, enforcement, and supervision of the Order, including all referendum costs in connection with the Order.

(j) The Board may not expend for administration, maintenance, and functioning of the Board in any fiscal period an amount that exceeds 10 percent of the assessments and other income received by or available to the Board for that fiscal period. Reimbursements to the Secretary required under paragraph (i) of this section are excluded from this limitation on spending.

(k) The Board may establish an operating monetary reserve and may carry over to subsequent fiscal periods excess funds in any reserve so established: *Provided:* That, the funds in the reserve do not exceed one fiscal period's budget of expenses. Subject to approval by the Secretary, such reserve funds may be used to defray any expenses authorized under this part.

(l) Pending disbursement of assessments and all other revenue under a budget approved by the Secretary, the Board may invest assessments and all other revenues collected under this section in:

(1) Obligations of the United States or any agency of the United States;

(2) General obligations of any State or any political subdivision of a State;

(3) Interest bearing accounts or certificates of deposit of financial institutions that are members of the Federal Reserve System; or

(4) Obligations fully guaranteed as to principal interest by the United States.

§ 1214.51 Financial statements.

(a) The Board shall prepare and submit quarterly financial statements to the Secretary, or at any other time requested by the Secretary. Each such financial statement shall include, but not be limited to, a balance sheet, income statement, and expense budget. The expense budget shall show expenditures during the time period covered by the report, year-to-date expenditures, and the unexpended budget.

(b) Each financial statement shall be submitted to the Secretary within 45 days after the end of the time period to which it applies.

(c) The Board shall submit annually to the Secretary an annual financial statement within 90 days after the end of the fiscal period to which it applies.

§ 1214.52 Assessments.

(a) The funds to cover the Board's expenses shall be paid from assessments on producers, importers, and donations

from any person including those not subject to assessments under this Order, and other funds available to the Board including those collected pursuant to § 1214.62 and subject to the limitations contained therein.

(b) The payment of assessments on domestic Christmas trees that are cut and sold will be the responsibility of the producer who produces the Christmas trees or causes the trees to be cut.

(c) Each importer of Christmas trees shall pay the assessment to the Board on Christmas trees imported for marketing in the United States, through Customs. If Customs does not collect an assessment from an importer, the importer would be responsible for paying the assessment directly to the Board 30 calendar days after importation.

(1) The assessment rate for imported Christmas trees shall be the same or equivalent to the rate for Christmas trees domestically produced in the United States.

(2) The import assessment shall be uniformly applied to imported Christmas trees that are identified by the numbers 0604.91.00.20, 0604.91.00.40, and 0604.91.00.60 in the Harmonized Tariff Schedule of the United States or any other numbers used to identify Christmas trees in that schedule.

(3) The assessments due on imported Christmas trees shall be paid when they enter into the United States.

(d) Such assessments shall be levied at an initial rate of 15 cents per Christmas tree domestically produced or imported into the United States. The assessment rate will be reviewed by the Board, after the initial referendum is conducted pursuant to this subpart. The assessment rate may be increased or decreased no more than 2 cents per Christmas tree during the fiscal period. Any change in the assessment rate shall be subject to rulemaking by the Department. The assessment rate shall not exceed 20 cents per Christmas tree, nor shall it be less than 10 cents per Christmas tree, unless a majority of producers and importers approve such other levels of assessment through a referendum conducted pursuant to this subpart.

(e) All assessment payments and reports will be submitted to the office of the Board. All assessment payments are to be received no later than February 15 of the crop year following for producers and importers of Christmas trees. A late payment charge, may be imposed on any producer or importer who fails to remit to the Board, the total amount for which any such producer or importer is liable on or before the due date established by the Board. In addition to the late payment charge, an interest charge may be imposed on the outstanding amount for which the producer or importer is liable. The rate for late payment and interest charges shall be specified by the Secretary through rulemaking.

(f) Persons failing to remit total assessments due in a timely manner may also be subject to actions under Federal debt collection procedures.

(g) The Board may authorize other organizations, to collect assessments on its behalf with the approval of the Secretary.

§ 1214.53 Exemption from and refunds of assessments.

(a) *Producers that domestically produce and importers that import less than 500 Christmas trees.* (1) Any producer who domestically produces less than 500 Christmas trees who desires to claim an exemption from assessments as provided in § 1214.52 shall file an application on a form by the Board, for a certificate of exemption. Such producer shall certify that he/she will domestically produce less than 500 trees for the fiscal period for which the exemption is claimed. It is the responsibility of the producer to retain a copy of the certificate of exemption.

(2) Any importer who imports less than 500 trees in a fiscal period who desires to claim an exemption from assessments as provided in § 1214.52 shall file an application on a form by the Board, for a certificate of exemption. Such importer shall certify that the importer's total imports of Christmas trees are fewer than 500 trees for the fiscal period for which the exemption is claimed. It is the responsibility of the importer to retain a copy of the certificate of exemption.

(3) On receipt of an exemption application, the Board shall determine whether an exemption may be granted. The Board will then issue, if deemed appropriate, a certificate of exemption to the producer or importer which is eligible to receive one.

(4) The Board, with the Secretary's approval, may require persons receiving an exemption from assessments to provide to the Board reports on the disposition of exempt Christmas trees and, in the case of importers, proof of payment of assessments.

(5) The exemption will apply immediately following the issuance of the certificate of exemption.

(6) Producers and importers who received an exemption certificate from the Board but domestically produced or imported more than 500 Christmas trees during the fiscal period shall pay the Board the applicable assessments owed and submit any necessary reports to the Board pursuant to § 1214.70.

(7) The Board may develop additional procedures as it deems necessary for accurately accounting for this exemption. Such procedures shall be implemented through rulemaking by the Secretary.

(b) *Assessment refunds to importers.* (1) Importers who are exempt from assessment shall be eligible for a refund of assessments collected by Customs during the applicable fiscal period. No interest will be paid on assessments collected by Customs. The Board shall refund such importers their assessments as collected by Customs no later than 60 calendar days after receipt by the Board.

(c) *Organic.* (1) Organic Act means section 2103 of the Organic Foods Production Act of 1990 (7 U.S.C. 6502).

(2) A producer who domestically produces Christmas trees under an approved National Organic Program (NOP) (7 CFR part 205) system plan, produces only products that are eligible to be labeled as 100 percent organic under the NOP and is not a split operation shall be exempt from payment of assessments. To obtain an organic exemption, an eligible producer shall submit a request for exemption to the Board, on a form provided by the Board, at any time initially and annually thereafter on or before the start of the fiscal period as long as such producer continues to be eligible for the exemption. The request shall include the following: The producer's name and address; a copy of the organic operation certificate provided by a USDA-accredited certifying agent as defined in the Organic Act, a signed certification that the applicant meets all of the requirements specified for an assessment exemption, and such other information as may be required by the Board and with the approval of the Secretary. The Board shall have 30 calendar days to approve the exemption request. If the exemption is not granted, the Board will notify the applicant and provide reasons for the denial within the same time frame.

(3) An importer who imports only Christmas trees that are eligible to be labeled as 100 percent organic under the NOP and is not a split operation shall be exempt from the payment of assessments. To obtain an organic exemption, an eligible importer must submit documentation to the Board and request an exemption from assessment on 100 percent of organic Christmas trees, on a form provided by the Board, at any time initially and annually thereafter on or before the beginning of the fiscal period as long as the importer continues to be eligible for the

exemption. This documentation shall include the same information as required by producers in paragraph (c)(2) of this section. If the importer complies with the requirements of this section, the Board will grant the exemption and issue a Certificate of Exemption to the importer. The Board will also issue the importer a 9-digit alphanumeric Harmonized Tariff Schedule of the United States (HTSUS) classification valid for 1 year from the date of issue. This HTSUS classification should be entered by the importer on the Customs entry documentation. Any line item entry of 100 percent organic Christmas trees bearing this HTSUS classification assigned by the Board will not be subject to assessments.

(4) Importers who are exempt from assessment in paragraph (c)(3) of this section shall also be eligible for reimbursement of assessments collected by Customs and may apply to the Board for a reimbursement. The importer would be required to submit satisfactory proof to the Board that the importer paid the assessment on exempt organic products.

(5) The exemption will apply immediately following the issuance of the exemption certificate.

§ 1214.54 Refund escrow accounts.

(a) The Board shall establish an interest bearing escrow account with a financial institution that is a member of the Federal Reserve System and will deposit into such account an amount equal to 10 percent of the assessments collected during the period beginning on the effective date of the Order and ending on the date the Secretary announces the results of the required referendum.

(b) If the Order is not approved by the required referendum, the Board shall promptly pay refunds of assessments to all producers and importers that have paid assessments during the period beginning on the effective date of the Order and ending on the date the Secretary announces the results of the required referendum in the manner specified in paragraph (c) of this section.

(c) If the amount deposited in the escrow account is less than the amount of all refunds that producers and importers subject to the Order have a right to receive, the Board shall prorate the amount deposited in such account among all producers and importers who desire a refund of assessments paid no later than 90 days after the required referendum results are announced by the Secretary.

(d) Any producer or importer requesting a refund shall submit an application on the prescribed form to the Board within 60 days from the date the assessments were paid by such producer or importer but no later than the date the results of the required referendum are announced by the Secretary. The producer and importer shall also submit documentation to substantiate that assessments were paid. Any such demand shall be made by such producer or importer in accordance with the provisions of this subpart and in a manner consistent with regulations recommended by the Board and prescribed by the Secretary.

(e) If the Order is approved by the required referendum conducted under § 1214.71 then:

(1) The escrow account shall be closed; and,

(2) The funds shall be available to the Board for disbursement under § 1214.50.

Promotion, Research, and Information

§ 1214.60 Programs, plans, and projects.

(a) The Board shall receive and evaluate, or on its own initiative, develop and submit to the Secretary for approval any program, plan, or project authorized under this subpart. Such programs, plans, or projects shall provide for:

(1) The establishment, issuance, effectuation, and administration of appropriate programs for promotion, research, and information, including producer and consumer industry information, with respect to Christmas trees;

(2) The establishment and conduct of research with respect to the image, desirability, use, marketability, quality, product development or production of Christmas trees, to the end that the marketing and use of Christmas trees may be encouraged, expanded, improved, or made more acceptable and to advance the image, desirability, or quality of Christmas trees.

(b) A program, plan, or project may not be implemented prior to approval of the program, plan, or project by the Secretary. Once a program, plan, or project is so approved, the Board shall take appropriate steps to implement it.

(c) Each program, plan, or project implemented under this subpart shall be reviewed or evaluated periodically by the Board to ensure that it contributes to an effective program of promotion, research, or information. If it is found by the Board that any such program, plan, or project does not contribute to an effective program of promotion, research, or information, then the Board shall terminate such program, plan, or project.

§ 1214.61 Independent evaluation.

The Board shall, not less often than once every five years, authorize and fund, from funds otherwise available to the Board, an independent evaluation of the effectiveness of the Order and programs conducted by the Board pursuant to the Act. The Board shall submit to the Secretary, and make available to the public, the results of each periodic independent evaluation conducted under this paragraph.

§ 1214.62 Patents, copyrights, trademarks, information, publications, and product formulations.

Patents, copyrights, trademarks, information, publications, and product formulations developed through the use of funds received by the Board under this subpart shall be the property of the U.S. Government as represented by the Board and shall, along with any rents, royalties, residual payments, or other income from the rental, sales, leasing, franchising, or other uses of such patents, copyrights, trademarks, information, publications, or product formulations, inure to the benefit of the Board, shall be considered income subject to the same fiscal, budget, and audit controls as other funds of the Board, and may be licensed subject to approval by the Secretary. Upon termination of this subpart, § 1214.73 shall apply to determine disposition of all such property.

Reports, Books, and Records

§ 1214.70 Reports.

(a) Each producer and importer subject to this subpart shall be required to provide to the Board periodically such information as required by the Board, with the approval of the Secretary, which may include but not be limited to the following:

(1) Number of trees produced or total imports;

(2) Number of Christmas trees on which an assessment was paid;

(3) Name and address of producer or importer; and

(4) Date assessment was paid on each Christmas tree produced or imported.

(b) All reports required under § 1214.70 are due to the Board by February 15 of the crop year.

(c) This report shall accompany the payment of the collected assessments.

§ 1214.71 Books and records.

Each producer and importer subject to this subpart, including those who are exempt under this subpart, shall maintain any books and records necessary to carry out the provisions of this subpart and the regulations issued thereunder, including such records as

are necessary to verify any reports required. Such books and records must be made available during normal business hours for inspection by the Board's or Secretary's employees or agents. Such records shall be retained for at least two years beyond the fiscal period of their applicability.

§ 1214.72 Confidential treatment.

All information obtained from books, records, or reports under the Act, this subpart, and the regulations issued thereunder shall be kept confidential by all persons, including all employees and former employees of the Board, all officers and employees and former officers and employees of contracting and subcontracting agencies or agreeing parties having access to such information. Such information shall not be available to Board members, producers, or importers. Only those persons having a specific need for such information to effectively administer the provisions of this subpart shall have access to such information. Only such information so obtained as the Secretary deems relevant shall be disclosed by them, and then only in a judicial proceeding or administrative hearing brought at the direction, or on the request, of the Secretary, or to which the Secretary or any officer of the United States is a party, and involving this subpart. Nothing in this section shall be deemed to prohibit:

(a) The issuance of general statements based upon the reports of the number of persons subject to this subpart or statistical data collected therefrom, which statements do not identify the information furnished by any person; and

(b) The publication, by direction of the Secretary, of the name of any person who has been adjudged to have violated this subpart, together with a statement of the particular provisions of this subpart violated by such person.

Miscellaneous

§ 1214.80 Right of the Secretary.

All fiscal matters, programs, plans, or projects, rules or regulations, contracts, reports, or other substantive actions proposed or prepared by the Board shall be submitted to the Secretary for approval.

§ 1214.81 Referenda.

(a) *Required referendum.* For the purpose of ascertaining whether the persons subject to this Order favor the continuation, suspension, amendment, or termination of this Order, the Secretary shall conduct a referendum among persons subject to assessments under § 1214.52 who, during a representative period determined by the Secretary, have engaged in the production or importation of Christmas trees:

(1) The first referendum shall be conducted not later than 3 years after assessments first begin under the Order;

(2) The order will be approved in a referendum if a majority of producers and importers vote for approval in the referendum.

(b) *Subsequent referenda.* The Secretary shall conduct subsequent referenda:

(1) For the purpose of ascertaining whether producers and importers favor the continuation, suspension, or termination of the Order;

(2) Every seven years the Secretary shall hold a referendum to determine whether producers and importers of Christmas trees favor the continuation of the Order. The Order shall continue if it is favored by a majority of producers and importers voting for approval in the referendum who have been engaged in the production or importation of Christmas trees;

(3) At the request of the Board established in this Order;

(4) At the request of 10 percent or more of the number of persons eligible to vote in a referendum as set forth under the Order; or

(5) At any time as determined by the Secretary.

§ 1214.82 Suspension or termination.

(a) The Secretary shall suspend or terminate this part or subpart or a provision thereof, if the Secretary finds that the subpart or a provision thereof obstructs or does not tend to effectuate the purpose of the Act, or if the Secretary determines that this subpart or a provision thereof is not favored by persons voting in a referendum conducted pursuant to the Act.

(b) The Secretary shall suspend or terminate this subpart at the end of the fiscal period whenever the Secretary determines that its suspension or termination is favored by a majority of producers and importers voting in a referenda who, during a representative period determined by the Secretary, have been engaged in the production or importation of Christmas trees.

(c) If, as a result of a referendum the Secretary determines that this subpart is not approved, the Secretary shall:

(1) Not later than one hundred and eighty (180) days after making the determination, suspend or terminate, as the case may be, collection of assessments under this subpart; and

(2) As soon as practical, suspend or terminate, as the case may be, activities under this subpart in an orderly manner.

§ 1214.83 Proceedings after termination.

(a) Upon the termination of this subpart, the Board shall recommend not more than three of its members to the Secretary to serve as trustees for the purpose of liquidating the affairs of the Board. Such persons, upon designation by the Secretary, shall become trustees of all of the funds and property then in the possession or under control of the Board, including claims for any funds unpaid or property not delivered, or any other claim existing at the time of such termination.

(b) The said trustees shall:

(1) Continue in such capacity until discharged by the Secretary;

(2) Carry out the obligations of the Board under any contracts or agreements entered into pursuant to the Order;

(3) From time to time account for all receipts and disbursements and deliver all property on hand, together with all books and records of the Board and the trustees, to such person or persons as the Secretary may direct; and

(4) Upon request of the Secretary execute such assignments or other instruments necessary and appropriate to vest in such persons title and right to all funds, property and claims vested in the Board or the trustees pursuant to the Order.

(c) Any person to whom funds, property or claims have been transferred or delivered pursuant to the Order shall be subject to the same obligations imposed upon the Board and upon the trustees.

(d) Any residual funds not required to defray the necessary expenses of liquidation shall be turned over to the Secretary to be disposed of, to the extent practical, to one or more Christmas tree organizations in the United States in the interest of continuing Christmas tree promotion, research, and information programs.

§ 1214.84 Effect of termination or amendment.

Unless otherwise expressly provided by the Secretary, the termination of this subpart or of any regulation issued pursuant thereto, or the issuance of any amendment to either thereof, shall not:

(a) Affect or waive any right, duty, obligation or liability which shall have arisen or which may thereafter arise in connection with any provision of this subpart or any regulation issued thereunder.

(b) Release or extinguish any violation of this subpart or any regulation issued thereunder.

(c) Affect or impair any rights or remedies of the United States, or of the

Secretary or of any other persons, with respect to any such violation.

§ 1214.85 Personal liability.

No member or employee of the Board shall be held personally responsible, either individually or jointly with others, in any way whatsoever, to any person for errors in judgment, mistakes, or other acts, either of commission or omission, as such member or employee, except for acts of dishonesty or willful misconduct.

§ 1214.86 Separability.

If any provision of this subpart is declared invalid or the applicability thereof to any person or circumstances is held invalid, the validity of the remainder of this subpart or the applicability thereof to other persons or circumstances shall not be affected thereby.

§ 1214.87 Amendments.

Amendments to this subpart may be proposed from time to time by the Board or by any interested person affected by the provisions of the Act, including the Secretary.

§ 1214.88 OMB control numbers.

The control number assigned to the information collection requirements by the Office of Management and Budget pursuant to the Paperwork Reduction Act of 1995, 44 U.S.C. chapter 35, is OMB control number 0505–0001, and OMB control number 0581–NEW.

Subpart B—[Reserved]

Dated: November 2,2010.

David R. Shipman,

Acting Administrator.

[FR Doc. 2010–28038 Filed 11–5–10; 8:45 am]

BILLING CODE 3410–02–P

DEPARTMENT OF AGRICULTURE

Agricultural Marketing Service

7 CFR Part 1214

[Document No. AMS–FV–10–0008–PR]

RIN 0581–AD00

Proposed Christmas Tree Promotion, Research, and Information Order; Referendum Procedures

AGENCY: Agricultural Marketing Service, Agriculture, USDA.

ACTION: Proposed rule.

SUMMARY: This proposed rule invites comments on procedures for conducting a referendum to determine whether the issuance or continuation of the proposed Christmas Promotion, Research, and Information Order (Proposed Order) is favored by domestic producers and importers of Christmas trees. This proposed program would be implemented under the Commodity Promotion, Research, and Information Act of 1996 (1996 Act). The 1996 Act allows for a referendum to be conducted determining if domestic producers and importers favor the proposed order and also providing that a referendum be conducted up to three years after the effective date of the Proposed Order. The program would be implemented or continued if approved by a simple majority of the eligible domestic producers and importers voting in the referendum. These procedures would also be used for any subsequent referendum under the Proposed Order, if it is approved in the initial referendum. The Proposed Order is being published separately in this issue of the **Federal Register**. This proposed rule also announces the Agricultural Marketing Service's (AMS) intent to request approval by the Office of Management and Budget (OMB) of new information collection requirements to implement the program.

DATES: Comments must be received by February 7, 2011. Pursuant to the Paperwork Reduction Act, comments on the information collection burden that would result from this proposal must be received by February 7, 2011.

ADDRESSES: Interested persons are invited to submit written comments concerning this proposed rule. Comments can be made on the Internet at *http://www.regulations.gov* or to the Research and Promotion Branch, Fruit and Vegetable Programs, Agricultural Marketing Service, USDA, Stop 0244, Room 0634–S, 1400 Independence Avenue, SW., Washington, DC 20250–0244; Fax (202) 205–2800; Toll Free (888) 720–9917. Comments should reference the docket number, title of action, date, and page number of this issue of the **Federal Register** and will be made available for public inspection at the above address during regular business hours or at *http://www.regulations.gov.* All comments submitted in response to this proposed rule will be included in the record and will be made available to the public. Please be advised that the identity of the individuals or entities submitting comments will be made public on the Internet at the address provided above.

Pursuant to the Paperwork Reduction Act (PRA), send comments regarding the accuracy of the burden estimate, ways to minimize the burden, including the use of automated collection techniques or other forms of information technology, or any other aspect of this collection of information, to the above address and to the Desk Office for Agriculture, Office of Information and Regulatory Affairs, Office of Management and Budget, New Executive Office Building, 725 17th Street, NW., Room 725, Washington, DC 20503.

FOR FURTHER INFORMATION CONTACT: Patricia A. Petrella, Marketing Specialist, Research and Promotion Branch, FV, AMS, USDA, Stop 0244, Room 0634–S, 1400 Independence Avenue, SW., Washington, DC 20250–0244; telephone 202–720–9915 or (888) 720–9917 (toll free) or e-mail: *Patricia.Petrella@ams.usda.gov.*

SUPPLEMENTARY INFORMATION: This proposed rule is issued pursuant to the Commodity Promotion, Research, and Information Act of 1996 (1996 Act) (7 U.S.C. 7411–7425).

Executive Order 12866

This proposed rule has been determined to be not significant for purposes of Executive Order 12866 and, therefore, has not been reviewed by the Office of Management and Budget (OMB).

Executive Order 12988

This proposed rule has been reviewed under Executive Order 12988, Civil Justice Reform. It is not intended to have retroactive effect. Section 524 of the 1996 Act provides that the Act shall not affect or preempt any other Federal or State law authorizing promotion or research relating to an agricultural commodity.

Under Section 519 of the 1996 Act, a person subject to an order may file a petition with the Department (USDA) stating that an order, any provision of an order, or any obligation imposed in connection with an order, is not established in accordance with the law. In the petition, the person may request a modification of an order or an exemption from an order. Any petition filed challenging an order, any provision of an order, or any obligation imposed in connection with an order, shall be filed within two years after the effective date of an order, provision or obligation subject to challenge in the petition. The petitioner will have the opportunity for a hearing on the petition. Thereafter, the Department will issue a ruling on the petition. The 1996 Act provides that the district court of the United States for any district in which the petitioner resides or conducts business shall have the jurisdiction to review a final ruling on the petition, if the petitioner files a complaint for that

purpose not later than 20 days after the date of entry of the Department's final ruling.

Domestic producers and importers can vote three years after the establishment of the program to determine if they favor the continuation of the program. This proposed rule invites comments on procedures for conducting a referendum to determine if domestic producers and importers favor the proposed order. This referendum would need to be approved by a simple majority of the eligible domestic producers and importers voting in the referendum. The proponents proposed that a referendum be held among domestic producers and importers three years after the first assessments begin to determine whether they favor continuation of the program. These procedures would also be used for any subsequent referendum under the Proposed Order. The Proposed Order is being published separately in this issue of the **Federal Register**. This proposed rule also announces the Agricultural Marketing Service's (AMS) intent to request approval by the Office of Management and Budget (OMB) of new information collection requirements to implement the program.

The 1996 Act authorizes USDA to establish agricultural commodity research and promotion orders which may include a combination of promotion, research, industry information, and consumer information activities funded by mandatory assessments. These programs are designed to maintain and expand markets and uses for agricultural commodities.

The 1996 Act provides for alternatives within the terms of a variety of provisions. Paragraph (e) of section 518 of the 1996 Act provides three options for determining industry approval of a new research and promotion program: (1) By a majority of those persons voting; (2) by persons voting for approval who represent a majority of the volume of the agricultural commodity; or (3) by a majority of those persons voting for approval who also represent a majority of the volume of the agricultural commodity. In addition, section 518 of the 1996 Act provides for referenda to ascertain approval of an order to be conducted either prior to its going into effect or within three years after assessments first begin under an order.

USDA received a proposal for a national research and promotion program for Christmas trees from the Christmas Tree Checkoff Task Force (Task Force). The program would be financed by an assessment on Christmas trees—domestic producers and importers—and would be administered by a board of industry members selected by the Secretary of Agriculture (Secretary). The initial assessment rate would be $0.15 per Christmas tree domestically produced or imported into the United States and could be increased up to $0.20 per Christmas tree. The purpose of the program would be to strengthen the position of fresh cut Christmas trees in the marketplace and maintain and expand markets for Christmas trees within the United States.

The Task Force proposed that a referendum be held among domestic producers and importers three years after the first assessments begin to determine whether they favor continuation of the program. The Task Force recommended that the program be implemented or continued if it is favored by a majority of the domestic producers and importers voting in the referendum. Domestic producers or importers who domestically produce or import more than 500 Christmas trees annually would be eligible to vote in the referendum.

Accordingly, this proposed rule would add subpart B to part 1214 that would establish procedures for conducting the referendum. The procedures would cover definitions, voting instructions, use of subagents, ballots, the referendum report, and confidentiality of information. The procedures would be applicable for the initial referendum and future referenda.

Initial Regulatory Flexibility Act Analysis

In accordance with the Regulatory Flexibility Act (RFA) (5 U.S.C. 601–612), AMS is required to examine the impact of the proposed rule on small entities. Accordingly, AMS has considered the economic impact of this action on small entities.

The purpose of the RFA is to fit regulatory actions to the scale of businesses subject to such actions so that small businesses will not be disproportionately burdened. The Small Business Administration defines, in 13 CFR part 121, small agricultural producers as those having annual receipts of no more than $750,000 and small agricultural service firms (domestic manufacturers and importers) as those having annual receipts of no more than $7.0 million.

Under these criteria, the majority of the domestic producers that would be covered under this Proposed Order would be considered small entities, while most importers would not. Domestic producers and importers who produced or imported less than 500 Christmas trees annually would be exempt from the assessment. Organic domestic producers and importers are also expected to be exempt from assessments. The number of entities assessed under the program would be approximately 3,263. Estimated revenue is expected at $2 million of which 10 percent is expected from imported product and 90 percent from domestic product.

According to the Task Force, based on data from the 2007 Census of Agriculture, there were approximately 12,255 Christmas tree farms that produced Christmas trees in the United States. Approximately 25 percent of the domestic producers or 3,100 Christmas tree domestic producers would be subject to the assessment based on the exemption of those producing less than 500 Christmas trees would be exempt from assessments. Approximately 95 percent of the domestic producers subject to the assessment qualified under the definition for small business owners. In 2008, there were approximately 175 importers. Based on the U.S. Customs data, 163 importers are subject to the assessment rate under the proposed Order.

This proposed rule invites comments on procedures for conducting a referendum to determine whether domestic producers and importers favor issuance or continuation of a proposed Christmas tree Order. USDA would conduct the referendum. The 1996 Act allows for a referendum to be conducted determining if domestic producers and importers favor the proposed order and also providing that a referendum be conducted up to three years after the effective date of the Proposed Order. Domestic producers and importers can vote three years after the establishment of the program to determine if they favor the continuation of the program. The procedures would also be used for any subsequent referendum under the Order. The procedures are authorized under paragraph (e) of section 518 of the 1996 Act.

Regarding the economic impact of the Proposed Order on affected entities, domestic producers and importers of more than 500 Christmas trees annually would be required to pay assessments to the Board. As previously mentioned, the initial assessment rate would be $0.15 per Christmas tree domestically produced or imported to the United States and could be increased to no more than $0.20 per Christmas tree. Voting in the referendum is optional. If domestic producers and importers chose to vote, the burden of voting would be offset by the benefits of having the

opportunity to vote on whether or not they want the program to become effective.

Regarding alternatives, USDA considered requiring eligible voters to vote in person at various USDA offices across the country. Conducting the referendum from one central location by mail ballot would be more cost effective and reliable. USDA would provide easy access to information for potential voters through a toll free telephone line. USDA also considered electronic voting, but the use of computers is not universal.

This action would impose an additional reporting burden on domestic producers and importers of Christmas trees. Eligible domestic producers and importers would have the opportunity to complete and submit a ballot to USDA indicating whether or not they favor implementation or continuation of the proposed Order. The specific burden for the ballot is detailed later in this document in the section titled Paperwork Reduction Act. As with all Federal promotion programs, reports and forms are periodically reviewed to reduce information requirements and duplication by industry and public sector agencies. Finally, USDA has not identified any relevant Federal rules that duplicate, overlap, or conflict with this proposed rule.

AMS is committed to complying with the E-Government Act, to promote the use of the Internet and other information technologies to provide increased opportunities for citizen access to Government information and services, and for other purposes.

Regarding outreach efforts, USDA would keep these individuals informed throughout the program implementation and referendum process to ensure that they are aware of and are able to participate in the program implementation process. USDA would also publicize information regarding the referendum process so that trade associations and related industry media can be kept informed.

USDA has performed this initial RFA analysis regarding the impact of this proposed rule on small businesses.

Paperwork Reduction Act

In accordance with the Paperwork Reduction Act of 1995 (44 U.S.C. chapter 35), the referendum ballot, which represents the information collection and recordkeeping requirements that may be imposed by this proposed rule, has been submitted to OMB for approval.

Title: Christmas Tree Promotion, Research, and Information Order.

OMB Number: 0581–NEW.

Expiration Date of Approval: 3 years from OMB date of approval.

Type of Request: New information collection for research and promotion programs.

Abstract: The information collection requirements in this request are essential to carry out the intent of the 1996 Act. The information collection concerns a proposal received by USDA for a national research and promotion program for Christmas trees. The program would be financed by an assessment on Christmas tree domestic producers and importers and would be administered by a board of industry members selected by the Secretary. The program would provide an exemption for domestic producers and importers that domestically produce or import less than 500 Christmas trees annually. A referendum would be held among eligible domestic producers and importers to determine whether they favor implementation or continuation of the program. The purpose of the program would be to help build the market for fresh cut Christmas trees.

The information collection requirements in this proposed rule concern the referendum that would be held to determine whether the program is favored by the industry. Domestic producers and importers that domestically produce or import more than 500 Christmas trees annually would be eligible to vote in the referendum. The ballot would be completed by eligible domestic producers and importers who want to indicate whether or not they support implementation or continuation of the program.

Referendum Ballot

Estimate of Burden: Public recordkeeping burden for this collection of information is estimated to average 0.25 hour per application.

Respondents: Domestic producers and importers.

Estimated Number of Respondents: 3,263 (3,100 domestic producers and 163 importers).

Estimated Number of Responses per Respondent: 1 every 7 years (0.14).

Estimated Total Annual Burden on Respondents: 114.21 hours.

The ballot would be added to the other information collections approved under OMB No. 0581–NEW.

An estimated 3,263 respondents would provide information to the Board (3,100 domestic producers and 163 importers). The estimated cost of providing the information to the Board by respondents would be $3,768.93. This total has been estimated by multiplying 114.21 total hours required for reporting and recordkeeping by $33, the average mean hourly earnings of various occupations involved in keeping this information. Data for computation of this hourly rate was obtained from the U.S. Department of Labor Statistics.

The proposed Order's provisions have been carefully reviewed, and every effort has been made to minimize any unnecessary recordkeeping costs or requirements, including efforts to utilize information already submitted under other programs administered by USDA and other state programs.

Request for Public Comment Under the Paperwork Reduction Act

Comments are invited on: (a) Whether the proposed collection of information is necessary for the proper performance of functions of the Proposed Order and USDA's oversight of the Proposed Order, including whether the information would have practical utility; (b) the accuracy of USDA's estimate of the burden of the proposed collection of information, including the validity of the methodology and assumptions used; (c) the accuracy of USDA's estimate of the principal producing areas in the United States for Christmas trees; (d) the accuracy of USDA's estimate of the number of domestic producers and importers of Christmas trees that would be covered under the program; (e) ways to enhance the quality, utility, and clarity of the information to be collected; and (f) ways to minimize the burden of the collection of information on those who are to respond, including the use of appropriate automated, electronic, mechanical, or other technological collection techniques or other forms of information technology.

Comments concerning the information collection requirements contained in this action should reference OMB No. 0581–NEW. In addition, the docket number, date, and page number of this issue of the **Federal Register** also should be referenced. Comments should be sent to the same addresses referenced in the **ADDRESSES** section of this proposed rule.

A 90-day comment period is provided to allow interested persons to comment on this proposed information collection. All written comments received will be summarized and included in the request for OMB approval. All comments will also become a matter of public record.

List of Subjects in 7 CFR Part 1214

Administrative practice and procedure, Advertising, Consumer information, Marketing agreements, Christmas trees, Promotion, Reporting and recordkeeping requirements.

For the reasons set forth in the preamble, it is proposed that Title 7, Chapter XI of the Code of Federal Regulations, as proposed to be amended elsewhere in this issue of the **Federal Register**, be further amended as follows:

PART 1214—CHRISTMAS TREES, PROMOTION, RESEARCH AND INFORMATION ORDER

1. The authority citation for part 1214 continues to read as follows:

Authority: 7 U.S.C. 7411–7425; 7 U.S.C. 7401.

2. Subpart B is added to read as follows:

Subpart B—Referendum Procedures

Sec.
1214.100 General.
1214.101 Definitions.
1214.102 Voting.
1214.103 Instructions.
1214.104 Subagents.
1214.105 Ballots.
1214.106 Referendum report.
1214.107 Confidential information.
1214.108 OMB control number.

Subpart B—Referendum Procedures.

§ 1214.100 General.

Referenda to determine whether eligible domestic producers and importers of Christmas trees favor the issuance, continuance, amendment, suspension, or termination of the Christmas Tree Promotion, Research, and Information Order shall be conducted in accordance with this subpart.

§ 1214.101 Definitions.

(a) *Administrator* means the Administrator of the Agricultural Marketing Service, with power to delegate, or any officer or employee of the U.S. Department of Agriculture to whom authority has been delegated or may hereafter be delegated to act in the Administrator's stead.

(b) *Customs* means the United States Customs and Border Protection or U.S. Customs Service, an agency of the United States Department of Homeland Security.

(c) *Department* means the U.S. Department of Agriculture or any officer or employee of the Department to whom authority has heretofore been delegated, or to whom authority may hereafter be delegated, to act in the Secretary's stead.

(d) *Eligible domestic producer* means any person who domestically produces more than 500 Christmas trees annually in the United States, and who:

(1) Owns, or shares the ownership and risk of loss of the production of Christmas trees;

(2) Rents Christmas tree production land, facilities and/or equipment resulting in the ownership of all or a portion of the Christmas trees domestically produced;

(3) Owns Christmas tree production facilities and equipment but does not manage them and, as compensation, obtains the ownership of a portion of the Christmas trees domestically produced; or

(4) Is a party in a landlord-tenant relationship or a divided ownership arrangement involving totally independent entities cooperating only to domestically produce Christmas trees who share the risk of loss and receive a share of the Christmas trees domestically produced. No other acquisition of legal title to Christmas trees shall be deemed to result in persons becoming eligible domestic producers.

(e) *Eligible importer* means any person importing more than 500 Christmas trees annually into the United States as a principal or as an agent, broker, or consignee of any person who domestically produces or handles Christmas trees outside of the United States for sale in the United States, and who is listed as the importer of record for such Christmas trees that are identified in the Harmonized Tariff Schedule of the United States by the numbers 0604.91.00.20, 0604.91.00.40, and 0604.91.00.60 during the representative period. Importation occurs when Christmas trees originating outside of the United States are released from custody by Customs and introduced into the stream of commerce in the United States. Included are persons who hold title to foreign-produced Christmas trees immediately upon release by Customs, as well as any persons who act on behalf of others, as agents or brokers, to secure the release of Christmas trees from Customs when such Christmas trees are entered or withdrawn for consumption in the United States.

(f) *Christmas tree* means any tree of the coniferous species, that is severed or cut from its roots and marketed as a Christmas tree for holiday use.

(g) *Order* means the Christmas Tree Promotion, Research, and Information Order.

(h) *Person* means any individual, group of individuals, partnership, corporation, association, cooperative, or any other legal entity. For the purpose of this definition, the term "partnership" includes, but is not limited to:

(1) A husband and a wife who have title to, or leasehold interest in, a Christmas tree farm as tenants in common, joint tenants, tenants by the entirety, or, under community property laws, as community property; and

(2) So-called "joint ventures" wherein one or more parties to an agreement, informal or otherwise, contributed land and others contributed capital, labor, management, or other services, or any variation of such contributions by two or more parties.

(i) *Referendum agent* or *agent* means the individual or individuals designated by the Department to conduct the referendum.

(j) *Representative period* means the period designated by the Department.

(k) *United States* or *U.S.* means collectively the 50 states, the District of Columbia, the Commonwealth of Puerto Rico, and the territories and possessions of the United States.

§ 1214.102 Voting.

(a) Each eligible domestic producer and eligible importer of Christmas trees shall be entitled to cast only one ballot in the referendum. However, each domestic producer in a landlord/tenant relationship or a divided ownership arrangement involving totally independent entities cooperating only to domestically produce Christmas trees, in which more than one of the parties is a domestic producer or importer, shall be entitled to cast one ballot in the referendum covering only such domestic producer or importer's share of the ownership.

(b) Proxy voting is not authorized, but an officer or employee of an eligible corporate domestic producer or importer, or an administrator, executor, or trustee or an eligible entity may cast a ballot on behalf of such entity. Any individual so voting in a referendum shall certify that such individual is an officer or employee of the eligible entity, or an administrator, executive, or trustee of an eligible entity and that such individual has the authority to take such action. Upon request of the referendum agent, the individual shall submit adequate evidence of such authority.

(c) All ballots are to be cast by mail as instructed by the Department.

(d) Eligible domestic producers or eligible importers may be asked to provide proof of sales or acreage as proof of eligibility to vote in any referendum.

§ 1214.103 Instructions.

The referendum agent shall conduct the referendum, in the manner provided in this subpart, under the supervision of the Administrator. The Administrator may prescribe additional instructions, not inconsistent with the provisions of this subpart, to govern the procedure to

be followed by the referendum agent. Such agent shall:

(a) Determine the period during which ballots may be cast.

(b) Provide ballots and related material to be used in the referendum. The ballot shall provide for recording essential information, including that needed for ascertaining whether the person voting, or on whose behalf the vote is cast, is an eligible voter.

(c) Give reasonable public notice of the referendum:

(1) By utilizing available media or public information sources, without incurring advertising expense, to publicize the dates, places, method of voting, eligibility requirements, and other pertinent information. Such sources of publicity may include, but are not limited to, print and radio; and

(2) By such other means as the agent may deem advisable.

(d) Mail to eligible domestic producers and importers whose names and addresses are known to the referendum agent, the instructions on voting, a ballot, and a summary of the terms and conditions of the proposed Order. No person who claims to be eligible to vote shall be refused a ballot.

(e) At the end of the voting period, collect, open, number, and review the ballots and tabulate the results in the presence of an agent of a third party authorized to monitor the referendum process.

(f) Prepare a report on the referendum.

(g) Announce the results to the public.

§ 1214.104 Subagents.

The referendum agent may appoint any individual or individuals necessary or desirable to assist the agent in performing such agent's functions of this subpart. Each individual so appointed may be authorized by the agent to perform any or all of the functions which, in the absence of such appointment, shall be performed by the agent.

§ 1214.105 Ballots.

The referendum agent and subagents shall accept all ballots cast. However, if an agent or subagent deems that a ballot should be challenged for any reason, the agent or subagent shall endorse above their signature, on the ballot, a statement to the effect that such ballot was challenged, by whom challenged, the reasons therefore, the results of any investigations made with respect thereto, and the disposition thereof. Ballots invalid under this subpart shall not be counted.

§ 1214.106 Referendum report.

Except as otherwise directed, the referendum agent shall prepare and submit to the Administrator a report on the results of the referendum, the manner in which it was conducted, the extent and kind of public notice given, and other information pertinent to the analysis of the referendum and its results.

§ 1214.107 Confidential information.

The ballots and other information or reports that reveal, or tend to reveal, the vote of any person covered under the Order and the voter list shall be strictly confidential and shall not be disclosed.

§ 1214.108 OMB control number.

The control number assigned to the information collection requirement in this subpart by the Office of Management and Budget pursuant to the Paperwork Reduction Act of 1995, 44 U.S.C. chapter 35 is OMB control number 0581–NEW.

Dated: November 2, 2010.

David R. Shipman,

Acting Administrator.

[FR Doc. 2010–28040 Filed 11–5–10; 8:45 am]

BILLING CODE 3410–02–P

FARM CREDIT ADMINISTRATION

12 CFR Part 615

RIN 3052–AC25

Funding and Fiscal Affairs, Loan Policies and Operations, and Funding Operations; Capital Adequacy; Capital Components—Basel Accord Tier 1 and Tier 2

AGENCY: Farm Credit Administration.

ACTION: Advance notice of proposed rulemaking (ANPRM); extension of comment period.

SUMMARY: The Farm Credit Administration (FCA, Agency or we) is extending the comment period on our ANPRM that seeks comments to facilitate the development of enhancements to our regulatory capital framework to more closely align minimum capital requirements with those of the Federal banking regulators and with risks taken by Farm Credit System (FCS or System) institutions, taking into consideration the System's public mission as a Government-sponsored enterprise (GSE) and its unique cooperative structure. We are extending the comment period so all interested parties will have additional time to provide comments.

DATES: You may send comments on or before May 4, 2011.

ADDRESSES: There are several methods for you to submit your comments. For accuracy and efficiency reasons, commenters are encouraged to submit comments by e-mail or through the Agency's Web site. As facsimiles (faxes) are difficult for us to process and achieve compliance with section 508 of the Rehabilitation Act (29 U.S.C. 794d), we are no longer accepting comments submitted by fax. Regardless of the method you use, please do not submit your comments multiple times via different methods. You may submit comments by any of the following methods:

- *E-mail:* Send us an e-mail at *reg-comm@fca.gov*.
- *FCA Web site: http://www.fca.gov*. Select "Public Commenters," then "Public Comments," and follow the directions for "Submitting a Comment."
- *Federal E-Rulemaking Web site: http://www.regulations.gov*. Follow the instructions for submitting comments.
- *Mail:* Gary K. Van Meter, Deputy Director, Office of Regulatory Policy, Farm Credit Administration, 1501 Farm Credit Drive, McLean, VA 22102–5090.

You may review copies of comments we receive at our office in McLean, Virginia, or on our Web site at *http://www.fca.gov*. Once you are in the Web site, select "Legal Info," and then select "Public Comments." We will show your comments as submitted, but for technical reasons we may omit items such as logos and special characters. Identifying information that you provide, such as phone numbers and addresses, will be publicly available. However, we will attempt to remove e-mail addresses to help reduce Internet spam.

FOR FURTHER INFORMATION CONTACT: Laurie Rea, Associate Director, Office of Regulatory Policy, Farm Credit Administration, McLean, VA 22102–5090, (703) 883–4232, TTY (703) 883–4434, or Chris Wilson, Financial Analyst, Office of Regulatory Policy, Farm Credit Administration, McLean, VA 22102–5090, (703) 883–4204, TTY (703) 883–4434, or Rebecca S. Orlich, Senior Counsel, Office of General Counsel, Farm Credit Administration, McLean, VA 22102–5090, (703) 883–4020, TTY (703) 883–4020.

SUPPLEMENTARY INFORMATION: On July 8, 2010, FCA published a notice in the **Federal Register** seeking public comment to facilitate the development of a proposed rule that would minimize the differences, to the extent appropriate, in regulatory capital requirements between System institutions and Federally regulated banking organizations.[1]

[1] *See* 75 FR 39392.

The comment period is scheduled to expire on November 5, 2010. In a letter dated October 20, 2010, the Farm Credit Council (FCC), on behalf of the System including the Federal Farm Credit Banks Funding Corporation, requested that the Agency extend the comment period until February 28, 2011. The FCC requested the extension in order to give the System the opportunity to study the rules developed by the Federal banking regulators. The Basel Committee on Banking Supervision is in the process of formulating a new regulatory capital framework, and the U.S. banking regulators are expected to revise their capital guidelines consistent with the new requirements. In view of the expected revisions in the near future, the FCA has decided to extend the comment period 180 days beyond the original expiration date and, therefore, the comment period will close on May 4, 2011. The FCA supports public involvement and participation in its regulatory process and invites all interested parties to review and provide comments on our ANPRM.

Dated: November 4, 2010.

Roland E. Smith,

Secretary, Farm Credit Administration Board.

[FR Doc. 2010–28245 Filed 11–5–10; 8:45 am]

BILLING CODE 6705–01–P

FEDERAL HOUSING FINANCE BOARD

12 CFR Parts 965, 966, 969, and 987

FEDERAL HOUSING FINANCE AGENCY

12 CFR Part 1270

RIN 2590–AA36

Federal Home Loan Bank Liabilities

AGENCY: Federal Housing Finance Board, Federal Housing Finance Agency.

ACTION: Notice of proposed rulemaking; request for comment.

SUMMARY: The Federal Housing Finance Agency (FHFA) is proposing to re-organize and re-adopt existing Federal Housing Finance Board (Finance Board) regulations dealing with consolidated obligations (COs), as well as related regulations addressing other authorized Federal Home Loan Bank (Bank) liabilities and book-entry procedures for COs, as new part 1270 of the FHFA regulations. The proposed rule would also make changes to the regulations governing COs to reflect recent statutory amendments which removed authority from FHFA to issue COs on which the Banks are jointly and severally liable and provided this authority to the Banks themselves. Otherwise, FHFA is proposing to re-adopt most of the regulatory provisions addressed in this rulemaking without substantive amendment.

DATES: Comments on the proposed rule must be received on or before January 7, 2011. For additional information, see **SUPPLEMENTARY INFORMATION.**

ADDRESSES: You may submit your comments on the proposed rule, identified by regulatory information number (RIN) 2590–AA36 by any of the following methods:

- *E-mail:* Comments to Alfred M. Pollard, General Counsel may be sent by e-mail to *RegComments@FHFA.gov.* Please include "RIN 2590–AA36" in the subject line of the message.
- *Federal eRulemaking Portal: http://www.regulations.gov.* Follow the instructions for submitting comments. If you submit your comments to the Federal eRulemaking Portal, please also send it by e-mail to FHFA at *RegComments@FHFA.gov* to ensure timely receipt by the agency. Please include "RIN 2590–AA36" in the subject line of the message.
- *Hand Delivery/Courier:* The hand delivery address is: Alfred M. Pollard, General Counsel, Attention: Comments/RIN 2590–AA36, Federal Housing Finance Agency, Fourth Floor, 1700 G Street, NW., Washington, DC 20552. The package should be logged at the Guard Desk, First Floor, on business days between 9 a.m. and 5 p.m.
- *U.S. Mail, United Parcel Service, Federal Express, or Other Mail Service:* The mailing address for comments is: Alfred M. Pollard, General Counsel, Attention: Comments/RIN 2590–AA36, Federal Housing Finance Agency, Fourth Floor, 1700 G Street, NW., Washington, DC 20552.

FOR FURTHER INFORMATION CONTACT: Joseph A. McKenzie, Chief Economist, Federal Home Loan Bank and System Analysis, 202–408–2845, Federal Housing Finance Agency, 1625 Eye Street, NW., Washington, DC 20006; or Thomas E. Joseph, Senior Attorney-Advisor, 202–414–3095, Office of General Counsel, Federal Housing Finance Agency, Fourth Floor, 1700 G Street, NW., Washington, DC 20552. The telephone number for the Telecommunications Device for the Deaf is (800) 877–8339.

SUPPLEMENTARY INFORMATION:

I. Comments

FHFA invites comments on all aspects of the proposed rule, and will adopt a final regulation with appropriate changes after taking all comments into consideration. Copies of all comments will be posted on the Internet Web site at *https://www.fhfa.gov.* In addition, copies of all comments received will be available for examination by the public on business days between the hours of 10 a.m. and 3 p.m., at the Federal Housing Finance Agency, Fourth Floor, 1700 G Street, NW., Washington, DC 20552. To make an appointment to inspect comments, please call the Office of General Counsel at (202) 414–6924.

II. Background

A. Creation of the Federal Housing Finance Agency and Recent Legislation

Effective July 30, 2008, the Housing and Economic Recovery Act of 2008 (HERA), Public Law 110–289, 122 Stat. 2654, created FHFA as a new independent agency of the Federal Government, and transferred to FHFA the supervisory and oversight responsibilities of the Office of Federal Housing Enterprise Oversight (OFHEO) over the Federal National Mortgage Association, and the Federal Home Loan Mortgage Corporation (collectively, the Enterprises), the oversight responsibilities of the Finance Board over the Banks and the Office of Finance (OF) (which acts as the Banks' fiscal agent) and certain functions of the Department of Housing and Urban Development. *See id.* at section 1101, 122 Stat. 2661–62. FHFA is responsible for ensuring that the Enterprises and the Banks operate in a safe and sound manner, including that they maintain adequate capital and internal controls, that their activities foster liquid, efficient, competitive and resilient national housing finance markets, and that they carry out their public policy missions through authorized activities. *See id.* at section 1102, 122 Stat. 2663–64. The Enterprises, the Banks, and the OF continue to operate under regulations promulgated by OFHEO and the Finance Board until such regulations are superseded by regulations issued by FHFA. *See id.* at sections 1301, 1302, 1311, 1312, 122 Stat. 2794–95, 2797–98.

B. The Bank System Generally

The twelve Banks are instrumentalities of the United States organized under the Federal Home Loan Bank Act (Bank Act).[1] *See* 12 U.S.C. 1423 and 1432(a). The Banks are cooperatives; only members of a Bank may purchase the capital stock of a

[1] The twelve Banks are located in: Boston, New York, Pittsburgh, Atlanta, Cincinnati, Indianapolis, Chicago, Des Moines, Dallas, Topeka, San Francisco, and Seattle.

Bank, and only members or certain eligible housing associates (such as state housing finance agencies) may obtain access to secured loans, known as advances, or other products provided by a Bank. *See* 12 U.S.C. 1426(a)(4), 1430(a), and 1430b. Each Bank is managed by its own board of directors and serves the public interest by enhancing the availability of residential mortgage and community lending credit through its member institutions. *See* 12 U.S.C. 1427. Any eligible institution (generally a federally insured depository institution or state-regulated insurance company) may become a member of a Bank if it satisfies certain criteria and purchases a specified amount of the Bank's capital stock. *See* 12 U.S.C. 1424; 12 CFR part 1263.

As government-sponsored enterprises (GSEs), the Banks are granted certain privileges under Federal law. In light of those privileges and their status as GSEs, the Banks typically can borrow funds at spreads over the rates on U.S. Treasury securities of comparable maturity lower than most other entities. The Banks pass along a portion of their GSE funding advantage to their members—and ultimately to consumers—by providing advances and other financial services at rates that would not otherwise be available to their members.

C. Consolidated Obligations

COs, consisting of bonds and discount notes, are the principal funding source for the Banks. Although each Bank is primarily liable for the portion of COs corresponding to the proceeds received by that Bank, each Bank is also jointly and severally liable with the other eleven Banks for the payment of principal and interest on all COs. *See* 12 CFR 966.9. In addition to issuing COs, the Banks are authorized to raise funds and incur liabilities by accepting deposits from members, other Banks and instrumentalities of the United States, purchasing Federal funds and entering into repurchase agreements. *See* 12 CFR 965.2.

Prior to June 2000, COs had for many years been issued on behalf of the Banks by the Finance Board, as the Banks' regulator, under authority in section 11(c) of the Bank Act. Until the passage of HERA, section 11(c) of the Bank Act authorized the Banks' regulator to issue bonds which were the joint and several obligations of all the Banks. *See* 12 U.S.C. 1431(c)(2007).

In June 2000, the Finance Board published a final rule which altered how COs were issued and transferred authority for issuance of the Bank COs to the Banks themselves pursuant to authority under section 11(a) of the Bank Act. *See* 65 FR 36290 (June 7, 2000) (*adopting* among other parts 12 CFR parts 966 and 985). Section 11(a) of the Bank Act allows each Bank to issue debt subject to any conditions and requirements established by the Banks' regulator. *See* 12 U.S.C. 1431(a). Under the rules published in June 2000, the Banks were allowed to issue debt subject to requirements that all such debt be the joint and several obligations of all twelve Banks and be issued through the OF as their agent. *See* 12 CFR 966.2(b). The Finance Board retained the option to issue COs itself under section 11(c) of the Bank Act at any point, although it did not do so. *See* 12 CFR 966.2(a).

In 2008, HERA amended section 11 of the Bank Act to remove the authority of the regulator to issue COs and to allow the Banks to issue such debt through OF as the Banks' agent. *See* section 1204(3), Public Law 110–289, 122 Stat. 2786. As a consequence, the Banks are now able to issue COs pursuant to section 11(c) of the Bank Act on which the Banks are jointly and severally liable by statute.[2] To reflect this statutory change, FHFA is proposing to amend the regulations governing the issuance of COs, as well as make other changes to existing regulations.

D. Considerations of Differences between the Banks and the Enterprises

Section 1201 of HERA requires the Director, when promulgating regulations relating to the Banks, to consider the following differences between the Banks and the Enterprises: Cooperative ownership structure; mission of providing liquidity to members; affordable housing and community development mission; capital structure; and joint and several liability. *See* section 1201 Public Law 110–289, 122 Stat. 2782–83 (*amending* 12 U.S.C. 4513). The Director also may consider any other differences that are deemed appropriate. In preparing this proposed rule, FHFA considered the differences between the Banks and the Enterprises as they relate to the above factors. FHFA requests comments from the public about whether differences related to these factors should result in any revisions to the proposal.

[2] As amended by HERA, section 11(c) of the Bank Act provides, in relevant part, that "* * * the Office of Finance, as agent for the Banks, may issue consolidated * * * Bank bonds which shall be the joint and several obligations of all the * * * Banks, and shall be secured and be issued upon such terms and conditions as such Office may prescribe." 12 U.S.C. 1431(c).

III. Analysis of the Proposed Rule

FHFA is proposing to amend the existing regulations previously adopted by the Finance Board that address COs to reflect changes made by HERA to section 11 of the Bank Act. At the same time, FHFA is proposing to combine the CO regulations with related regulations addressing Banks' authorized sources of funds, deposits from Bank members and book-entry procedures for COs into a single new part 1270 of the FHFA regulations. *See* 12 CFR parts 965, 966, 969 and 987. Most of the existing provisions would be carried over to new part 1270 without change, other than for technical changes necessary to conform cross-references to other FHFA regulations and to reflect the fact that FHFA is now regulator for the Banks. Changes to the regulations that FHFA is proposing are discussed in more detail below.

Proposed Subpart A of Part 1270

FHFA is proposing to consolidate relevant definitions from parts 965, 966, 969 and 987 of the Finance Board regulations into proposed subpart A of part 1270. To the extent necessary, FHFA is also proposing to include in this subpart, relevant definitions from part 900 of the Finance Board regulations. Definitions contained in part 900 apply to all Finance Board regulations but would not apply to proposed part 1270 of the FHFA regulations. *See* 12 CFR part 900. No substantive changes would be made to most of these definitions.

FHFA is, however, proposing to adopt a new definition for "consolidated obligations" that varies slightly from the one that is currently set forth in part 900. The proposed changes reflect the fact that HERA amended section 11 of the Bank Act so that the Banks, and not FHFA, are now authorized to issue COs while recognizing that some outstanding COs may have been issued by the Finance Board under the prior statutory provisions. The proposed definition is the same as one FHFA adopted in other regulations. *See, e.g.,* 12 CFR 1229.1.

FHFA is also proposing to amend slightly the definition for the "Office of Finance" that now appears in the part 987 regulations concerning book-entry procedures for COs. The Finance Board first adopted the definition for OF in the book-entry procedure rules in 1998 to reflect the fact that OF would act as agent for the Finance Board in issuing COs, but at other times, would act as agent for the Banks in other functions such as payment on the COs. *See* 63 FR 8057, 8058 (Feb. 18, 1998). In 2002, the Finance Board adopted a technical

amendment to the part 987 definition to remove references to the OF acting as agent for the Finance Board in recognition of the fact that the Finance Board in 2000 had delegated authority to issue COs to the Banks themselves. *See* Final Rule: Technical Amendments to Federal Housing Finance Board Regulations, 67 FR 12841, 12855 (Mar. 20, 2002). The definition proposed in this rulemaking would combine the definition of "OF" used in part 1273 of the FHFA regulations, which establishes OF, with the substance of the definition now in part 987. *See* 12 CFR 1273.1. The proposed changes to the definition would recognize that under proposed part 1270, a reference to "OF" could be made in circumstances, or to address duties, other than those related to book-entry procedures.

Proposed Subpart B of Part 1270

Proposed subpart B would combine provisions now found in the Finance Board regulations part 965, Sources of Funds, and part 969, Deposits. In this respect, § 965.2 of the Finance Board regulations would be relocated to proposed § 1270.2, and proposed § 1270.3 would combine in a single section the authorizations and requirements now set forth in § 965.3 and § 969.2 of the Finance Board regulations. 12 CFR 965.2, 965.3 and 969.2. No substantive changes are being proposed to any of the provisions which would be relocated to subpart B of part 1270 by this proposed rule.

Proposed Subpart C of Part 1270

Under the proposed rule, § 966.2 through § 966.10 of the Finance Board regulations, addressing COs, would be incorporated into subpart C of part 1270 as proposed §§ 1270.4 through 1270.11.[3] 12 CFR 966.2 through 966.10. FHFA is not proposing to amend most of these provisions in any substantive fashion.

FHFA is proposing amendments in § 1270.4 which would address issuance of COs, however. First, the provision now found in § 966.2(a) which reserves to the Banks' regulator the right to issue COs under section 11(c) of the Bank Act, would be deleted to conform the rule to the HERA amendments, which removed this authority for FHFA and provided the authority to the Banks instead. Similarly, proposed § 1270.4(a) would provide that the Banks shall issue COs pursuant to authority in section 11(c) of the Bank Act, rather than under section 11(a) of the Bank Act, as is stated in current § 966.2(b). New language in proposed § 1270.4(a) would also reflect other changes made by HERA to the Bank Act and update references to reflect FHFA's role as regulator and the fact that the FHFA Director's principal duties and authority for oversight of the Bank System are found in sections 1311, 1312, and 1313 of the Federal Housing Enterprises Financial Safety and Soundness Act, as amended. 12 U.S.C. 4511, 4512 and 4513.

Proposed § 1270.4(a) would continue to require the Banks to issue COs subject to the provisions of part 1270 and any other relevant rules, regulations, terms, and conditions as the FHFA Director may prescribe. The proposed provision also would continue to make clear that the Banks are jointly and severally liable on all COs issued under the rule. The negative pledge requirement now found in § 966.2(c) of the Finance Board regulations would also be carried over without substantive change under the proposed rule as new § 1270.4(b).

The proposed rule would also remove, as unnecessary, the current provision found in § 966.4(b) that refers to consolidated notes. *See* 12 CFR 966.4(b). This change has no effect on the Banks' authority to issue COs. Current § 966.4(a), which provides that all COs shall be issued in *pari passu,* would be carried over as new § 1270.4(a)(3). *See* 12 CFR 966.4(a).

Finally, FHFA is proposing to amend language in § 1270.9(c) which would carry over the current prohibition on the direct placement of COs found in § 966.8(c). 12 CFR 966.8(c). The proposed language would incorporate into the rule the regulatory interpretation issued in 2005 by the Finance Board which clarified that the prohibition on the direct placement of COs meant that the Banks cannot purchase COs as part of an initial issuance of COs regardless of whether the purchase was directly from the OF or indirectly from one of the firms that form OF's approved underwriter network. *See* Regulatory Interpretation 2005–RI–01 (Mar. 30, 2005). As explained in the RI, the Finance Board did not believe that such purchases would further the mission of the Banks. The proposed change in language is to make clear that FHFA agrees with this view and intends this interpretation of the prohibition in existing § 966.8(c) to be incorporated into the new provision.[4]

Proposed Subpart D of Part 1270

FHFA is proposing to move regulations governing book-entry procedures for COs now found in § 987.2 through § 987.10 to subpart D of part 1270 as proposed §§ 1270.12 through 1270.20.[5] Any changes being proposed to these provisions are technical and conforming in nature, such as amendments to remove and update references to the Finance Board and to make other changes made necessary by the transfer and combination of these regulations into new part 1270. No substantive changes are being proposed to these provisions.

Requirements Referencing Credit Ratings

The recently enacted Dodd-Frank Wall Street Reform and Consumer Protection Act provides Federal agencies with one year to review regulations that require the use of an assessment of the credit-worthiness of a security or money market instrument and any references to, or requirements in, such regulations regarding credit ratings, and to remove such references or requirements. *See* § 939A, Public Law 111–203, 124 Stat. 1376 (July 21, 2010). In place of such credit-rating based requirements, an agency is instructed to substitute appropriate standards for determining credit-worthiness. The new law further provides that, to the extent feasible, an agency should adopt a uniform standard of credit-worthiness for use in its regulations, taking into account the entities regulated by it and the purposes for which such regulated entities would rely on the credit-worthiness standard.

As proposed, the rule would carry over without change a number of existing provisions which reference credit ratings or otherwise impose specific credit rating requirements. Rather than use this rulemaking to suggest specific changes to these provisions, FHFA has determined instead to begin soliciting comments on what alternative standards of credit-worthiness could appropriately be adopted more generally to replace the requirements in its regulations that are based on credit ratings. Therefore, FHFA is requesting comments on potential credit-worthiness standards that could be applied across regulations governing the Bank System that could be used to replace the credit-ratings

[3] As already noted, relevant definitions now found in § 966.1 of the Finance Board regulations would be incorporated in subpart A of part 1270 under this proposed rule. 12 CFR 966.1.

[4] The proposed change would not affect the validity of the waiver of this requirement issued by the Finance Board in December 2005 to allow, subject to certain conditions, the direct placement of COs with a Bank when necessary to assure that the Federal Reserve Bank of New York has sufficient funds to pay all principal and interest that come due on a given day on COs or portion of COs. *See* Fed. Hsing, Fin. Brd. Res. 2005–22 (Dec. 14, 2005).

[5] As already noted, relevant definitions now found in § 987.1 of the Finance Board regulations would be incorporated in subpart A of part 1270 under this proposed rule. 12 CFR 987.1.

requirements discussed below, as well as to replace similar requirements in other applicable rules. Further, with regard to the specific provisions described below, FHFA is also seeking comments on whether the provisions could be deleted from a final rule without compromising safety or soundness or whether other specific safeguards or requirements (but ones which are not necessarily based on credit-worthiness standards) could provide similar protections as those afforded under the proposed provisions.

First, proposed § 1270.4(b)(6) references assets that have been assigned a rating or assessment by a credit rating organization registered with the Securities and Exchange Commission as a nationally recognized statistical rating organization (NRSRO) that is equivalent to or higher than the rating or assessment assigned by the NRSRO to outstanding COs. This provision would be carried over as part of the "negative pledge requirement" which states that a Bank must maintain certain specific assets free of any lien or pledge in an amount equal to the Bank's pro rata share of total outstanding COs. *See* 12 CFR 966.2(c). The negative pledge requirement was first adopted in 1946. It has been amended only once to any significant degree, in 1992, at which time the Finance Board expanded slightly the list of qualifying assets to account for certain conservative investment opportunities that arose subsequent to 1946. *See* Proposed Rule: Leverage Ratio on Consolidated Federal Home Loan Bank Debt, 57 FR 20061, 20062 (May 11, 1992); Final Rule: Leverage Ratio on Consolidated Federal Home Loan Bank Debt, 57 FR 62183, 62185 (Dec. 30, 1992). The specific provision at issue here was added as part of the 1992 amendments. As the Finance Board noted in proposing the change, the provision was meant to assure that "the investments [used to meet the negative pledge] have a relatively conservative risk profile [by requiring] * * * a rating or assessment at least equal to senior [Bank] bonds * * *" 57 FR at 20062.

Proposed § 1270.5(a)(2)(xi), (xii), and (xiii) contain references to mortgage and community development related investments that carry either the highest or the second highest investment grade ratings from an NRSRO. These provisions are included in the transitional leverage limit which applies until a Bank converts to the capital structure required under the Gramm-Leach-Bliley Act (GLB Act) and complies with the GLB Act capital requirements in 12 CFR part 932. *See* Final Rule: Federal Home Loan Bank Consolidated Obligations—Definition of the Term "Non-Mortgage Assets", 67 FR 35713 (May 21, 2002). This proposed leverage requirement currently would apply to only one Bank. The specific provisions at issue identify assets that would be considered related to the Bank's core mission activities and therefore would not be included in calculations of the Bank's non-mortgage assets. *Id.* at 35713–14. The calculation of "non-mortgage assets" is relevant because, under the current and proposed regulations, the leverage limit applicable to a Bank would become more restrictive if the Bank's non-mortgage assets exceed 11 percent of the Bank's total assets.

FHFA is also proposing to carry over as new § 1270.5(b) and § 1270.5(c) current requirements concerning specific credit ratings that Banks collectively must maintain for COs and that each Bank must maintain individually. These requirements were adopted as a means of enhancing protections afforded holders of COs by requiring Banks either collectively or individually to take actions to maintain the required ratings. *See* Final Rule: Office of Finance; Authority of Federal Home Loan Banks to Issue Consolidated Obligations, 65 FR 36290, 36294 (June 7, 2000). The Finance Board believed that these requirements provided more effective on-going protections to bond holders than the provision that they replaced, which had required a written statement from a rating agency or an investment bank that a change in the leverage limit applicable to the Banks would not adversely affect the ratings or creditworthiness of COs, prior to the change becoming effective. *Id.*

IV. Paperwork Reduction Act

The proposed rule does not contain any collections of information pursuant to the Paperwork Reduction Act of 1995 (44 U.S.C. 3501 *et seq.*). Therefore, FHFA has not submitted any information to the Office of Management and Budget for review.

V. Regulatory Flexibility Act

The proposed rule applies only to the Banks, which do not come within the meaning of small entities as defined in the Regulatory Flexibility Act (RFA). *See* 5 U.S.C. 601(6). Therefore in accordance with section 605(b) of the RFA, FHFA certifies that this proposed rule, if promulgated as a final rule, will not have significant economic impact on a substantial number of small entities.

List of Subjects

12 CFR Parts 965, 969

Federal home loan banks.

12 CFR Part 966

Federal home loan banks, Government securities.

12 CFR Part 987

Accounting, Government securities.

12 CFR Part 1270

Accounting, Federal home loan banks, Government securities.

Accordingly, for reasons stated in the preamble and under the authority of 12 U.S.C. 1431, 1432, 1435, 4511, 4512, 4513, and 4526, FHFA proposes to amend subchapters H and K of chapter IX and subchapter D of chapter XII of title 12 of the Code of Federal Regulations as follows:

CHAPTER IX—FEDERAL HOUSING FINANCE BOARD

SUBCHAPTER H—FEDERAL HOME LOAN BANK LIABILITIES

PART 965—[REMOVED]

1. Remove part 965.

PART 966—[REMOVED]

2. Remove part 966.

PART 969—[REMOVED]

3. Remove part 969.

SUBCHAPTER K—OFFICE OF FINANCE

PART 987—[REMOVED]

4. Remove part 987.

CHAPTER XII—FEDERAL HOUSING FINANCE AGENCY

SUBCHAPTER D—FEDERAL HOME LOAN BANKS

5. Add part 1270 to subchapter D to read as follows:

PART 1270—LIABILITIES

Subpart A—Definitions

Sec.
1270.1 Definitions.

Subpart B—Sources of Funds

1270.2 Authorized liabilities.
1270.3 Deposits from members.

Subpart C—Consolidated Obligations

1270.4 Issuance of consolidated obligations.
1270.5 Leverage limit and credit rating requirements.
1270.6 Transactions in consolidated obligations.
1270.7 Lost, stolen, destroyed, mutilated or defaced consolidated obligations.
1270.8 Administrative provision.
1270.9 Conditions for issuance of consolidated obligations.

1270.10 Joint and several liability.
1270.11 Savings clause.

Subpart D—Book-Entry Procedure for Consolidated Obligations

1270.12 Law governing rights and obligations of Banks, FHFA, Office of Finance, United States and Federal Reserve Banks; rights of any Person against Banks, FHFA, Office of Finance, United States and Federal Reserve Banks.
1270.13 Law governing other interests.
1270.14 Creation of Participant's Security Entitlement; security interests.
1270.15 Obligations of the Banks and the Office of Finance; no Adverse Claims.
1270.16 Authority of Federal Reserve Banks.
1270.17 Liability of Banks, FHFA, Office of Finance and Federal Reserve Banks.
1270.18 Additional requirements; notice of attachment for Book-entry consolidated obligations.
1270.19 Reference to certain Department of Treasury commentary and determinations.
1270.20 Obligations of United States with respect to consolidated obligations.

Authority: 12 U.S.C. 1431, 1432, 1435, 4511, 4512, 4513, and 4526.

Subpart A—Definitions

§ 1270.1 Definitions.

As used in this part, unless the context otherwise requires or indicates:

Adverse Claim means a claim that a claimant has a property interest in a Book-entry consolidated obligation and that it is a violation of the rights of the claimant for another Person to hold, transfer, or deal with the Security.

Bank, written in title case, means a Federal Home Loan Bank established under section 12 of the Bank Act.

Bank Act means the Federal Home Loan Bank Act, as amended (12 U.S.C. 1421 through 1449).

Book-entry consolidated obligation means a consolidated obligation maintained in the book-entry system of the Federal Reserve Banks.

Consolidated obligation means any bond, debenture or note on which the Banks are jointly and severally liable and which was issued under section 11 of the Bank Act (12 U.S.C. 1431) and in accordance with any implementing regulations, whether or not such instrument was originally issued jointly by the Banks or by the Federal Housing Finance Board on behalf of the Banks.

Deposits in banks or trust companies means:

(1) A deposit in another Bank;

(2) A demand account in a Federal Reserve Bank;

(3) A deposit in, or a sale of Federal funds to:

(i) An insured depository institution, as defined in section 2(9)(A) of the Bank Act (12 U.S.C. 1422(9)(A)), that is designated by a Bank's board of directors;

(ii) A trust company that is a member of the Federal Reserve System or insured by the FDIC, and is designated by a Bank's board of directors; or

(iii) A U.S. branch or agency of a foreign bank, as defined in the International Banking Act of 1978, as amended (12 U.S.C. 3101 *et seq.*), that is subject to the supervision of the FRB, and is designated by a Bank's board of directors.

Director, written in title case, means the Director of FHFA or his or her designee.

Entitlement Holder means a Person or a Bank to whose account an interest in a Book-entry consolidated obligation is credited on the records of a Securities Intermediary.

Federal Reserve Bank means a Federal Reserve Bank or branch, acting as fiscal agent for the Office of Finance, unless otherwise indicated.

Federal Reserve Bank Operating Circular means the publication issued by each Federal Reserve Bank that sets forth the terms and conditions under which the Federal Reserve Bank maintains Book-entry Securities accounts and transfers Book-entry Securities.

FHFA means the Federal Housing Finance Agency.

FRB means the Board of Governors of the Federal Reserve System.

Funds account means a reserve and/or clearing account at a Federal Reserve Bank to which debits or credits are posted for transfers against payment, Book-entry Securities transaction fees, or principal and interest payments.

Non-complying Bank means a Bank that has failed to provide the liquidity certification as required under § 1270.10(b)(1).

NRSRO means a credit rating organization registered with the Securities and Exchange Commission as a nationally recognized statistical rating organization.

Office of Finance or *OF* means the Office of Finance, a joint office of the Banks established under part 1273 of this title and referenced in the Bank Act and the Safety and Soundness Act, including OF acting as agent of the Banks in all matters relating to the issuance of Book-entry consolidated obligations and in the performance of all other necessary and proper functions relating to Book-entry consolidated obligations, including the payment of principal and interest due thereon.

Participant means a Person or a Bank that maintains a Participant's Securities Account with a Federal Reserve Bank.

Participant's Securities Account means an account in the name of a Participant at a Federal Reserve Bank to which Book-entry consolidated obligations held for a Participant are or may be credited.

Person means and includes an individual, corporation, company, governmental entity, association, firm, partnership, trust, estate, representative, and any other similar organization, but does not mean or include a Bank, the Director, FHFA, the Office of Finance, the United States, or a Federal Reserve Bank.

Repurchase agreement means an agreement in which a Bank sells securities and simultaneously agrees to repurchase those securities or similar securities at an agreed upon price, with or without a stated time for repurchase.

Revised Article 8 means Uniform Commercial Code, Revised Article 8, Investment Securities (with Conforming and Miscellaneous Amendments to Articles 1, 3, 4, 5, 9, and 10) 1994 Official Text. Copies of this publication are available from the Executive Office of the American Law Institute, 4025 Chestnut Street, Philadelphia, PA 19104, and the National Conference of Commissioners on Uniform State Laws, 676 North St. Clair Street, Suite 1700, Chicago, IL 60611.

Safety and Soundness Act means the Federal Housing Enterprises Financial Safety and Soundness Act of 1992 (12 U.S.C. 4501 *et seq.*) as amended.

Securities Intermediary means:

(1) A Person that is registered as a "clearing agency" under the Federal securities laws; a Federal Reserve Bank; any other person that provides clearance or settlement services with respect to a Book-entry consolidated obligation that would require it to register as a clearing agency under the Federal securities laws but for an exclusion or exemption from the registration requirement, its activities as a clearing corporation, including promulgation of rules, are subject to regulation by a Federal or State governmental authority; or

(2) A Person (other than an individual, unless such individual is registered as a broker or dealer under the Federal securities laws) including a bank or broker, that in the ordinary course of its business maintains securities accounts for others and is acting in that capacity.

Security Entitlement means the rights and property interest of an Entitlement Holder with respect to a Book-entry consolidated obligation.

Transfer Message means an instruction of a Participant to a Federal Reserve Bank to effect a transfer of a Book-entry consolidated obligation, as

set forth in Federal Reserve Bank Operating Circulars.

Subpart B—Sources of Funds

§ 1270.2 Authorized liabilities.

As a source of funds for business operations, each Bank is authorized to incur liabilities by:

(a) Accepting proceeds from the issuance of consolidated obligations issued in accordance with this part;

(b) Accepting time or demand deposits from members, other Banks or instrumentalities of the United States, and cash accounts from members or associates pursuant to § 950.17(b)(2)(i)(B) and 950.17(d) of this title, § 1269.4(a)(1) of this chapter, or § 1270.3 of this part, or from other institutions for which the Bank is providing correspondent services pursuant to section 11(e) of the Bank Act (12 U.S.C. 1431(e));

(c) Purchasing Federal funds; and

(d) Entering into repurchase agreements.

§ 1270.3 Deposits from members.

(a) Banks may accept demand and time deposits from members, reserving the right to require notice of intention to withdraw any part of time deposits. Rates of interest paid on all deposits shall be set by the Bank's board of directors (or, between regular meetings thereof, by a committee of directors selected by the board) or by the Bank President, if so authorized by the board. Unless otherwise specified by the board, a Bank President may delegate to any officer or employee of the Bank any authority he possesses under this section.

(b) Each Bank shall at all times have at least an amount equal to the current deposits received from its members invested in:

(1) Obligations of the United States;

(2) Deposits in banks or trust companies; or

(3) Advances with a remaining maturity not to exceed five years that are made to members in conformity with part 950 of this title.

Subpart C—Consolidated Obligations

§ 1270.4 Issuance of consolidated obligations.

(a) *Consolidated obligations issued by the Banks*—(1) Pursuant to the duties and authority of the Director set forth in sections 1311, 1312, and 1313 of the Safety and Soundness Act (12 U.S.C. 4511, 4512 and 4513), and subject to the provisions of this part and such other rules, regulations, terms, and conditions as the Director may prescribe, the Banks may issue joint debt under section 11(c) of the Bank Act (12 U.S.C. 1431(c)), which shall be consolidated obligations, on which the Banks shall be jointly and severally liable in accordance with § 1270.10 of this part.

(2) Consolidated obligations shall be issued only through the Office of Finance, as agent of the Banks pursuant to this part and part 1273 of this chapter.

(3) All consolidated obligations shall be issued in *pari passu.*

(b) *Negative pledge requirement.* Each Bank shall at all times maintain assets described in paragraphs (b)(1) through (b)(6) of this section free from any lien or pledge, in an amount at least equal to a *pro rata* share of the total amount of currently outstanding consolidated obligations and equal to such Bank's participation in all such consolidated obligations outstanding, provided that any assets that are subject to a lien or pledge for the benefit of the holders of any issue of consolidated obligations shall be treated as if they were assets free from any lien or pledge for purposes of compliance with this paragraph (b). Eligible assets are:

(1) Cash;

(2) Obligations of or fully guaranteed by the United States;

(3) Secured advances;

(4) Mortgages as to which one or more Banks have any guaranty or insurance, or commitment therefor, by the United States or any agency thereof;

(5) Investments described in section 16(a) of the Bank Act (12 U.S.C. 1436(a)); and

(6) Other securities that have been assigned a rating or assessment by an NRSRO that is equivalent to or higher than the rating or assessment assigned by that NRSRO to consolidated obligations outstanding.

§ 1270.5 Leverage limit and credit rating requirements.

(a) *Bank leverage*—(1) Except as provided in paragraph (a)(2) of this section, the total assets of any Bank that is not subject to the capital requirements set forth in part 932 of this title shall not exceed 21 times the total of paid-in capital stock, retained earnings, and reserves (excluding loss reserves and liquidity reserves for deposits pursuant to section 11(g) of the Bank Act (12 U.S.C. 1431(g)) of that Bank.

(2) The aggregate amount of assets of any Bank that is not subject to the capital requirements set forth in part 932 of this title may be up to 25 times the total paid-in capital stock, retained earnings, and reserves of that Bank, provided that non-mortgage assets, after deducting the amount of deposits and capital, do not exceed 11 percent of such total assets. For the purposes of this section, the amount of non-mortgage assets equals total assets after deduction of:

(i) Advances;

(ii) Acquired member assets, including all United States government-insured or guaranteed whole single-family or multi-family residential mortgage loans;

(iii) Standby letters of credit;

(iv) Intermediary derivative contracts;

(v) Debt or equity investments:

(A) That primarily benefit households having a targeted income level, a significant proportion of which must benefit households with incomes at or below 80 percent of area median income, or areas targeted for redevelopment by local, state, tribal or Federal government (including Federal Empowerment Zones and Enterprise and Champion Communities), by providing or supporting one or more of the following activities:

(*1*) Housing;

(*2*) Economic development;

(*3*) Community services;

(*4*) Permanent jobs; or

(*5*) Area revitalization or stabilization;

(B) In the case of mortgage-or asset-backed securities, the acquisition of which would expand liquidity for loans that are not otherwise adequately provided by the private sector and do not have a readily available or well established secondary market; and

(C) That involve one or more members or housing associates in a manner, financial or otherwise, and to a degree to be determined by the Bank;

(vi) Investments in SBICs, where one or more members or housing associates of the Bank also make a material investment in the same activity;

(vii) SBIC debentures, the short term tranche of SBIC securities, or other debentures that are guaranteed by the Small Business Administration under title III of the Small Business Investment Act of 1958, as amended (15 U.S.C. 681 *et seq.*);

(viii) Section 108 Interim Notes and Participation Certificates guaranteed by the Department of Housing and Urban Development under section 108 of the Housing and Community Development Act of 1974, as amended (42 U.S.C. 5308);

(ix) Investments and obligations issued or guaranteed under the Native American Housing Assistance and Self-Determination Act of 1996 (25 U.S.C. 4101 *et seq.*).

(x) Securities representing an interest in pools of mortgages (MBS) issued, guaranteed, or fully insured by the Government National Mortgage Association (Ginnie Mae), the Federal

Home Loan Mortgage Corporation (Freddie Mac), or the Federal National Mortgage Association (Fannie Mae), or Collateralized Mortgage Obligations (CMOs), including Real Estate Mortgage Investment Conduits (REMICs), backed by such securities;

(xi) Other MBS, CMOs, and REMICs rated in the highest rating category by an NRSRO;

(xii) Asset-backed securities collateralized by manufactured housing loans or home equity loans and rated in the highest rating category by an NRSRO; and

(xiii) Marketable direct obligations of state or local government units or agencies, rated in one of the two highest rating categories by an NRSRO, where the purchase of such obligations by a Bank provides to the issuer the customized terms, necessary liquidity, or favorable pricing required to generate needed funding for housing or community development.

(b) *Credit ratings*—(1) The Banks, collectively, shall obtain from an NRSRO and, at all times, maintain a current credit rating on the Banks' consolidated obligations.

(2) Each Bank shall operate in such a manner and take any actions necessary, including without limitation reducing Bank leverage, to ensure that the Banks' consolidated obligations receive and continue to receive the highest credit rating from any NRSRO by which the consolidated obligations have then been rated.

(c) *Individual Bank credit rating.* Each Bank shall operate in such a manner and take any actions necessary to ensure that the Bank has and maintains an individual issuer credit rating of at least the second highest credit rating from any NRSRO providing a rating, where such rating is a meaningful measure of the individual Bank's financial strength and stability, and is updated at least annually by an NRSRO, or more frequently as required by FHFA, to reflect any material changes in the condition of the Bank.

§ 1270.6 Transactions in consolidated obligations.

The general regulations of the Department of the Treasury now or hereafter in force governing transactions in United States securities, except 31 CFR part 357 regarding book-entry procedure, are hereby incorporated into this subpart C of this part, so far as applicable and as necessarily modified to relate to consolidated obligations, as the regulations of FHFA for similar transactions on consolidated obligations. The book-entry procedure for consolidated obligations is contained in subpart D of this part.

§ 1270.7 Lost, stolen, destroyed, mutilated or defaced consolidated obligations.

United States statutes and regulations of the Department of the Treasury now or hereafter in force governing relief on account of the loss, theft, destruction, mutilation or defacement of United States securities, so far as applicable and as necessarily modified to relate to consolidated obligations, are hereby adopted as the regulations of FHFA for the issuance of substitute consolidated obligations or the payment of lost, stolen, destroyed, mutilated or defaced consolidated obligations.

§ 1270.8 Administrative provision.

The Secretary of the Treasury or the Acting Secretary of the Treasury is hereby authorized and empowered, as the agent of FHFA and the Banks, to administer §§ 1270.6 and 1270.7, and to delegate such authority at their discretion to other officers, employees, and agents of the Department of the Treasury. Any such regulations may be waived on behalf of FHFA and the Banks by the Secretary of the Treasury, the Acting Secretary of the Treasury, or by an officer of the Department of the Treasury authorized to waive similar regulations with respect to United States securities, but only in any particular case in which a similar regulation with respect to United States securities would be waived. The terms "securities" and "bonds" as used in this section shall, unless the context otherwise requires, include and apply to coupons and interim certificates.

§ 1270.9 Conditions for issuance of consolidated obligations.

(a) The Office of Finance board of directors shall authorize the offering for current and forward settlement (up to 12 months) or the reopening of consolidated obligations, as necessary, and authorize the maturities, rates of interest, terms and conditions thereof, subject to the provisions of 31 U.S.C. 9108.

(b) Consolidated obligations may be offered for sale only to the extent that Banks are committed to take the proceeds.

(c) Consolidated obligations shall not be purchased by any Bank as part of an initial issuance whether such consolidated obligation is purchased directly from the Office of Finance or indirectly from an underwriter.

(d) If the Banks issue consolidated obligations denominated in a currency other than U.S. Dollars or linked to equity or commodity prices, then any Bank accepting proceeds from those consolidated obligations shall meet the following requirements with regard to such consolidated obligations:

(1) The relevant foreign exchange, equity price or commodity price risks associated with the consolidated obligation must be hedged in accordance with § 956.6 of this title;

(2) If there is a default on the part of a counterparty to a contract hedging the foreign exchange, equity or commodity price risk associated with a consolidated obligation, the Bank shall enter into a replacement contract in a timely manner and as soon as market conditions permit.

§ 1270.10 Joint and several liability.

(a) *In general*—(1) Each and every Bank, individually and collectively, has an obligation to make full and timely payment of all principal and interest on consolidated obligations when due.

(2) Each and every Bank, individually and collectively, shall ensure that the timely payment of principal and interest on all consolidated obligations is given priority over, and is paid in full in advance of, any payment to or redemption of shares from any shareholder.

(3) The provisions of this part shall not limit, restrict or otherwise diminish, in any manner, the joint and several liability of all of the Banks on any consolidated obligation.

(b) *Certification and reporting*—(1) Before the end of each calendar quarter, and before declaring or paying any dividend for that quarter, the President of each Bank shall certify in writing to FHFA that, based on known current facts and financial information, the Bank will remain in compliance with the liquidity requirements set forth in section 11(g) of the Act (12 U.S.C. 1431(g)), and any regulations (as the same may be amended, modified or replaced), and will remain capable of making full and timely payment of all of its current obligations, including direct obligations, coming due during the next quarter.

(2) A Bank shall immediately provide written notice to FHFA if at any time the Bank:

(i) Is unable to provide the certification required by paragraph (b)(1) of this section;

(ii) Projects at any time that it will fail to comply with statutory or regulatory liquidity requirements, or will be unable to timely and fully meet all of its current obligations, including direct obligations, due during the quarter;

(iii) Actually fails to comply with statutory or regulatory liquidity requirements or to timely and fully meet

all of its current obligations, including direct obligations, due during the quarter; or

(iv) Negotiates to enter or enters into an agreement with one or more other Banks to obtain financial assistance to meet its current obligations, including direct obligations, due during the quarter; the notice of which shall be accompanied by a copy of the agreement, which shall be subject to the approval of FHFA.

(c) *Consolidated obligation payment plans*—(1) A Bank promptly shall file a consolidated obligation payment plan for FHFA approval:

(i) If the Bank becomes a non-complying Bank as a result of failing to provide the certification required in paragraph (b)(1) of this section;

(ii) If the Bank becomes a non-complying Bank as a result of being required to provide the notice required pursuant to paragraph (b)(2) of this section, except in the event that a failure to make a principal or interest payment on a consolidated obligation when due was caused solely by a temporary interruption in the Bank's debt servicing operations resulting from an external event such as a natural disaster or a power failure; or

(iii) If FHFA determines that the Bank will cease to be in compliance with the statutory or regulatory liquidity requirements, or will lack the capacity to timely and fully meet all of its current obligations, including direct obligations, due during the quarter.

(2) A consolidated obligation payment plan shall specify the measures the non-complying Bank will undertake to make full and timely payments of all of its current obligations, including direct obligations, due during the applicable quarter.

(3) A non-complying Bank may continue to incur and pay normal operating expenses incurred in the regular course of business (including salaries, benefits, or costs of office space, equipment and related expenses), but shall not incur or pay any extraordinary expenses, or declare, or pay dividends, or redeem any capital stock, until such time as FHFA has approved the Bank's consolidated obligation payment plan or inter-Bank assistance agreement, or ordered another remedy, and all of the non-complying Bank's direct obligations have been paid.

(d) *FHFA payment orders; Obligation to reimburse*—(1) FHFA, in its discretion and notwithstanding any other provision in this section, may at any time order any Bank to make any principal or interest payment due on any consolidated obligation.

(2) To the extent that a Bank makes any payment on any consolidated obligation on behalf of another Bank, the paying Bank shall be entitled to reimbursement from the non-complying Bank, which shall have a corresponding obligation to reimburse the Bank providing assistance, to the extent of such payment and other associated costs (including interest to be determined by FHFA).

(e) *Adjustment of equities*—(1) Any non-complying Bank shall apply its assets to fulfill its direct obligations.

(2) If a Bank is required to meet, or otherwise meets, the direct obligations of another Bank due to a temporary interruption in the latter Bank's debt servicing operations (*e.g.,* in the event of a natural disaster or power failure), the assisting Bank shall have the same right to reimbursement set forth in paragraph (d)(2) of this section.

(3) If FHFA determines that the assets of a non-complying Bank are insufficient to satisfy all of its direct obligations as set forth in paragraph (e)(1) of this section, then FHFA may allocate the outstanding liability among the remaining Banks on a *pro rata* basis in proportion to each Bank's participation in all consolidated obligations outstanding as of the end of the most recent month for which FHFA has data, or otherwise as FHFA may prescribe.

(f) *Reservation of authority.* Nothing in this section shall affect the Director's authority to adjust equities between the Banks in a manner different than the manner described in paragraph (e) of this section, or to take enforcement or other action against any Bank pursuant to the Director's authority under the Safety and Soundness Act or the Bank Act, or otherwise to supervise the Banks and ensure that they are operated in a safe and sound manner.

(g) *No rights created*—(1) Nothing in this part shall create or be deemed to create any rights in any third party.

(2) Payments made by a Bank toward the direct obligations of another Bank are made for the sole purpose of discharging the joint and several liability of the Banks on consolidated obligations.

(3) Compliance, or the failure to comply, with any provision in this section shall not be deemed a default under the terms and conditions of the consolidated obligations.

§ 1270.11 Savings clause.

Any agreements or other instruments entered into in connection with the issuance of consolidated obligations prior to the amendments made to this part shall continue in effect with respect to all consolidated obligations issued under the authority of section 11 of the Bank Act (12 U.S.C. 1431) and pursuant to this part. References to consolidated obligations in such agreements and instruments shall be deemed to refer to all joint and several obligations of the Banks.

Subpart D—Book-Entry Procedure for Consolidated Obligations

§ 1270.12 Law governing rights and obligations of Banks, FHFA, Office of Finance, United States and Federal Reserve Banks; rights of any Person against Banks, FHFA, Office of Finance, United States and Federal Reserve Banks.

(a) Except as provided in paragraph (b) of this section, the rights and obligations of the Banks, FHFA, the Director, the Office of Finance, the United States and the Federal Reserve Banks with respect to: A Book-entry consolidated obligation or Security Entitlement and the operation of the Book-entry system, as it applies to consolidated obligations; and the rights of any Person, including a Participant, against the Banks, FHFA, the Director, the Office of Finance, the United States and the Federal Reserve Banks with respect to: A Book-entry consolidated obligation or Security Entitlement and the operation of the Book-entry system, as it applies to consolidated obligations; are governed solely by regulations of FHFA, including the regulations of this part 1270, the applicable offering notice, applicable procedures established by the Office of Finance, and Federal Reserve Bank Operating Circulars.

(b) A security interest in a Security Entitlement that is in favor of a Federal Reserve Bank from a Participant and that is not recorded on the books of a Federal Reserve Bank pursuant to § 1270.14(c)(1), is governed by the law (not including the conflict-of-law rules) of the jurisdiction where the head office of the Federal Reserve Bank maintaining the Participant's Securities Account is located. A security interest in a Security Entitlement that is in favor of a Federal Reserve Bank from a Person that is not a Participant, and that is not recorded on the books of a Federal Reserve Bank pursuant to § 1270.14(c)(1), is governed by the law determined in the manner specified in § 1270.13.

(c) If the jurisdiction specified in the first sentence of paragraph (b) of this section is a State that has not adopted Revised Article 8, then the law specified in the first sentence of paragraph (b) of this section shall be the law of that State as though Revised Article 8 had been adopted by that State.

§ 1270.13 Law governing other interests.

(a) To the extent not inconsistent with this part 1270, the law (not including the conflict-of-law rules) of a Securities Intermediary's jurisdiction governs:

(1) The acquisition of a Security Entitlement from the Securities Intermediary;

(2) The rights and duties of the Securities Intermediary and Entitlement Holder arising out of a Security Entitlement;

(3) Whether the Securities Intermediary owes any duties to an adverse claimant to a Security Entitlement;

(4) Whether an Adverse Claim can be asserted against a Person who acquires a Security Entitlement from the Securities Intermediary or a Person who purchases a Security Entitlement or interest therein from an Entitlement Holder; and

(5) Except as otherwise provided in paragraph (c) of this section, the perfection, effect of perfection or non-perfection, and priority of a security interest in a Security Entitlement.

(b) The following rules determine a "Securities Intermediary's jurisdiction" for purposes of this section:

(1) If an agreement between the Securities Intermediary and its Entitlement Holder specifies that it is governed by the law of a particular jurisdiction, that jurisdiction is the Securities Intermediary's jurisdiction.

(2) If an agreement between the Securities Intermediary and its Entitlement Holder does not specify the governing law as provided in paragraph (b)(1) of this section, but expressly specifies that the securities account is maintained at an office in a particular jurisdiction, that jurisdiction is the Securities Intermediary's jurisdiction.

(3) If an agreement between the Securities Intermediary and its Entitlement Holder does not specify a jurisdiction as provided in paragraphs (b)(1) or (b)(2) of this section, the Securities Intermediary's jurisdiction is the jurisdiction in which is located the office identified in an account statement as the office serving the Entitlement Holder's account.

(4) If an agreement between the Securities Intermediary and its Entitlement Holder does not specify a jurisdiction as provided in paragraphs (b)(1) or (b)(2) of this section and an account statement does not identify an office serving the Entitlement Holder's account as provided in paragraph (b)(3) of this section, the Securities Intermediary's jurisdiction is the jurisdiction in which is located the chief executive office of the Securities Intermediary.

(c) Notwithstanding the general rule in paragraph (a)(5) of this section, the law (but not the conflict-of-law rules) of the jurisdiction in which the Person creating a security interest is located governs whether and how the security interest may be perfected automatically or by filing a financing statement.

(d) If the jurisdiction specified in paragraph (b) of this section is a State that has not adopted Revised Article 8, then the law for the matters specified in paragraph (a) of this section shall be the law of that State as though Revised Article 8 had been adopted by that State. For purposes of the application of the matters specified in paragraph (a) of this section, the Federal Reserve Bank maintaining the Securities Account is a clearing corporation, and the Participant's interest in a Bank Book-entry Security is a Security Entitlement.

§ 1270.14 Creation of Participant's Security Entitlement; security interests.

(a) A Participant's Security Entitlement is created when a Federal Reserve Bank indicates by book entry that a Book-entry consolidated obligation has been credited to a Participant's Securities Account.

(b) A security interest in a Security Entitlement of a Participant in favor of the United States to secure deposits of public money, including, without limitation, deposits to the Treasury tax and loan accounts, or other security interest in favor of the United States that is required by Federal statute, regulation, or agreement, and that is marked on the books of a Federal Reserve Bank is thereby effected and perfected, and has priority over any other interest in the Securities. Where a security interest in favor of the United States in a Security Entitlement of a Participant is marked on the books of a Federal Reserve Bank, such Federal Reserve Bank may rely, and is protected in relying, exclusively on the order of an authorized representative of the United States directing the transfer of the Security. For purposes of this paragraph (b), an "authorized representative of the United States" is the official designated in the applicable regulations or agreement to which a Federal Reserve Bank is a party, governing the security interest.

(c)(1) The Banks, FHFA, the Director, the Office of Finance, the United States and the Federal Reserve Banks have no obligation to agree to act on behalf of any Person or to recognize the interest of any transferee of a security interest or other limited interest in a Security Entitlement in favor of any Person except to the extent of any specific requirement of Federal law or regulation or to the extent set forth in any specific agreement with the Federal Reserve Bank on whose books the interest of the Participant is recorded. To the extent required by such law or regulation or set forth in an agreement with a Federal Reserve Bank, or the Federal Reserve Bank Operating Circular, a security interest in a Security Entitlement that is in favor of a Federal Reserve Bank or a Person may be created and perfected by a Federal Reserve Bank marking its books to record the security interest. Except as provided in paragraph (b) of this section, a security interest in a Security Entitlement marked on the books of a Federal Reserve Bank shall have priority over any other interest in the Securities.

(2) In addition to the method provided in paragraph (c)(1) of this section, a security interest in a Security Entitlement, including a security interest in favor of a Federal Reserve Bank, may be perfected by any method by which a security interest may be perfected under applicable law as described in § 1270.12(b) or § 1270.13. The perfection, effect of perfection or non-perfection, and priority of a security interest are governed by that applicable law. A security interest in favor of a Federal Reserve Bank shall be treated as a security interest in favor of a clearing corporation in all respects under that law, including with respect to the effect of perfection and priority of the security interest. A Federal Reserve Bank Operating Circular shall be treated as a rule adopted by a clearing corporation for such purposes.

§ 1270.15 Obligations of the Banks and the Office of Finance; no Adverse Claims.

(a) Except in the case of a security interest in favor of the United States or a Federal Reserve Bank or otherwise as provided in § 1270.14(c)(1), for the purposes of this part 1270, the Banks, the Office of Finance and the Federal Reserve Banks shall treat the Participant to whose Securities Account an interest in a Book-entry consolidated obligation has been credited as the person exclusively entitled to issue a Transfer Message, to receive interest and other payments with respect thereof and otherwise to exercise all the rights and powers with respect to the Security, notwithstanding any information or notice to the contrary. Neither the Banks, FHFA, the Director, the Office of Finance, the United States, nor the Federal Reserve Banks are liable to a Person asserting or having an Adverse Claim to a Security Entitlement or to Book-entry consolidated obligation in a Participant's Securities Account, including any such claim arising as a

result of the transfer or disposition by a Federal Reserve Bank pursuant to a Transfer Message that the Federal Reserve Bank reasonably believes to be genuine.

(b) The obligation of the Banks and the Office of Finance to make payments of interest and principal with respect to Book-entry consolidated obligations is discharged at the time payment in the appropriate amount is made as follows:

(1) Interest on Book-entry consolidated obligations is either credited by a Federal Reserve Bank to a Funds Account maintained at the Federal Reserve Bank or otherwise paid as directed by the Participant.

(2) Book-entry consolidated obligations are paid, either at maturity or upon redemption, in accordance with their terms by a Federal Reserve Bank withdrawing the securities from the Participant's Securities Account in which they are maintained and by either crediting the amount of the proceeds, including both principal and interest, where applicable, to a Funds Account at the Federal Reserve Bank or otherwise paying such principal and interest as directed by the Participant. No action by the Participant is required in connection with the payment of a Book-entry consolidated obligation, unless otherwise expressly required.

§ 1270.16 Authority of Federal Reserve Banks.

(a) Each Federal Reserve Bank is hereby authorized as fiscal agent of the Office of Finance: To perform functions with respect to the issuance of Book-entry consolidated obligations, in accordance with the terms of the applicable offering notice and with procedures established by the Office of Finance; to service and maintain Book-entry consolidated obligations in accounts established for such purposes; to make payments of principal, interest and redemption premium (if any), as directed by the Office of Finance; to effect transfer of Book-entry consolidated obligations between Participants' Securities Accounts as directed by the Participants; and to perform such other duties as fiscal agent as may be requested by the Office of Finance.

(b) Each Federal Reserve Bank may issue Operating Circulars not inconsistent with this part 1270, governing the details of its handling of Book-entry consolidated obligations, Security Entitlements, and the operation of the Book-entry system under this part 1270.

§ 1270.17 Liability of Banks, FHFA, Office of Finance and Federal Reserve Banks.

The Banks, the Finance Board, the Office of Finance and the Federal Reserve Banks may rely on the information provided in a tender, transaction request form, other transaction documentation, or Transfer Message, and are not required to verify the information. Neither the Banks, FHFA, the Director, the Office of Finance, the United States, nor the Federal Reserve Banks shall be liable for any action taken in accordance with the information set out in a tender, transaction request form, other transaction documentation, or Transfer Message, or evidence submitted in support thereof.

§ 1270.18 Additional requirements; notice of attachment for Book-entry consolidated obligations.

(a) *Additional requirements.* In any case or any class of cases arising under the regulations in this part 1270, the Office of Finance may require such additional evidence and a bond of indemnity, with or without surety, as may in its judgment, or in the judgment of the Banks or FHFA, be necessary for the protection of the interests of the Banks, FHFA, the Office of Finance or the United States.

(b) *Notice of attachment.* The interest of a debtor in a Security Entitlement may be reached by a creditor only by legal process upon the Securities Intermediary with whom the debtor's securities account is maintained, except where a Security Entitlement is maintained in the name of a secured party, in which case the debtor's interest may be reached by legal process upon the secured party. The regulations in this part 1270 do not purport to establish whether a Federal Reserve Bank is required to honor an order or other notice of attachment in any particular case or class of cases.

§ 1270.19 Reference to certain Department of Treasury commentary and determinations.

Notwithstanding provisions in § 1270.6 regarding Department of Treasury regulations set forth in 31 CFR part 357:

(a) The Department of Treasury TRADES Commentary (31 CFR part 357, appendix B) addressing the Department of Treasury regulations governing book-entry procedure for Treasury Securities is hereby referenced, so far as applicable and as necessarily modified to relate to Book-entry consolidated obligations, as an interpretive aid to this subpart D of this part.

(b) Determinations of the Department of Treasury regarding whether a State shall be considered to have adopted Revised Article 8 for purposes of 31 CFR part 357, as published in the **Federal Register** or otherwise, shall also apply to this subpart D of this part.

§ 1270.20 Obligations of United States with respect to consolidated obligations.

Consolidated obligations are not obligations of the United States and are not guaranteed by the United States.

Dated: November 3, 2010.

Edward J. DeMarco,

Acting Director, Federal Housing Finance Agency.

[FR Doc. 2010–28178 Filed 11–5–10; 8:45 am]

BILLING CODE 8070–01–P

DEPARTMENT OF TRANSPORTATION

Federal Aviation Administration

14 CFR Part 39

[Docket No. FAA–2010–1101; Directorate Identifier 2009–CE–013–AD]

RIN 2120–AA64

Airworthiness Directives; Cessna Aircraft Company Models 150, 152, 170, 172, 175, 177, 180, 182, 185, 188, 190, 195, 206, 207, 210, T303, 336, and 337 Airplanes

AGENCY: Federal Aviation Administration (FAA), Department of Transportation (DOT).

ACTION: Notice of proposed rulemaking (NPRM).

SUMMARY: We propose to supersede Airworthiness Directive (AD) 87–20–03 R2, which applies to certain Cessna Aircraft Company (Cessna) 150, 152, 170, 172, 175, 177, 180, 182, 185, 188, 190, 195, 206, 207, 210, T303, 336, and 337 series airplanes. AD 87–20–03 R2 currently requires repetitive inspections and replacement of parts, if necessary, of the seat rail and seat rail holes; seat pin engagement; seat rollers, washers, and axle bolts or bushings; wall thickness of roller housing and the tang; and lock pin springs. Since we issued AD 87–20–03 R2, we have added steps to the inspection procedures, added revised figures, and clarified some of the existing steps. Consequently, this proposed AD would retain all of the actions from the previous AD and add steps to the inspection procedures in the previous AD. We are proposing this AD to prevent seat slippage or the seat roller housing from departing the seat rail, which may consequently cause the pilot/copilot to be unable to reach all the controls. This failure could lead to

the pilot/copilot losing control of the airplane.

DATES: We must receive comments on this proposed AD by December 23, 2010.

ADDRESSES: Use one of the following addresses to comment on this proposed AD:

- *Federal eRulemaking Portal:* Go to *http://www.regulations.gov.* Follow the instructions for submitting comments.
- *Fax:* (202) 493–2251.
- *Mail:* U.S. Department of Transportation, Docket Operations, M–30, West Building Ground Floor, Room W12–140, 1200 New Jersey Avenue, SE., Washington, DC 20590.
- *Hand Delivery:* U.S. Department of Transportation, Docket Operations, M–30, West Building Ground Floor, Room W12–140, 1200 New Jersey Avenue, SE., Washington, DC 20590, between 9 a.m. and 5 p.m., Monday through Friday, except Federal holidays.

FOR FURTHER INFORMATION CONTACT: Gary Park, Aerospace Engineer, ACE–118W, Wichita Aircraft Certification Office (ACO), 1801 Airport Road, Room 100, Wichita, Kansas 67209; telephone: (316) 946–4123; fax: (316) 946–4107.

SUPPLEMENTARY INFORMATION:

Comments Invited

We invite you to send any written relevant data, views, or arguments regarding this proposed AD. Send your comments to an address listed under the **ADDRESSES** section. Include the docket number, "FAA–2010–1101; Directorate Identifier 2009–CE–013–AD" at the beginning of your comments. We specifically invite comments on the overall regulatory, economic, environmental, and energy aspects of the proposed AD. We will consider all comments received by the closing date and may amend the proposed AD in light of those comments.

We will post all comments we receive, without change, to *http://www.regulations.gov,* including any personal information you provide. We will also post a report summarizing each substantive verbal contact we receive concerning this proposed AD.

Discussion

Reports of seats slipping on the rails on Cessna airplanes caused us to issue AD 87–20–03 R2, Amendment 39–6669. AD 87–20–03 R2 currently requires repetitive inspections and replacement of parts if necessary of the seat rail and seat rail holes; seat pin engagement; seat rollers, washers, and axle bolts or bushings; wall thickness of roller housing and the tang; and lock pin springs on Cessna 150, 152, 170, 172, 175, 177, 180, 182, 185, 188, 190, 195, 206, 207, 210, T303, 336, and 337 series airplanes.

We have in the last 20 years received several reports of accidents, some fatal, for Cessna airplanes where the primary latch pin for the pilot/copilot seat is not properly engaged in the seat rail/track. There have also been incidents where the seat roller housing has departed the seat rail. Consequently, we have added steps to the inspection procedures, added revised figures, and clarified some of the existing steps.

This condition, if not corrected, could result in seat slippage or the seat roller housing departing from the seat rail, which may consequently cause the pilot/copilot to be unable to reach all the controls. This failure could lead to the pilot/copilot losing control of the airplane.

FAA's Determination and Requirements of the Proposed AD

We are proposing this AD because we evaluated all information and determined the unsafe condition described previously is likely to exist or develop on other products of the same type design. This proposed AD would supersede AD 87–20–03 R2 with a new AD that would retain all of the actions from the previous AD and add steps to the inspection procedures in the previous AD.

Costs of Compliance

We estimate that this proposed AD would affect 36,000 airplanes in the U.S. registry.

The estimated total cost on U.S. operators includes the cumulative costs associated with AD 87–20–03 R2. The required actions of this proposed AD are the same as in AD 87–20–03 R2 with the exception of some added steps to the inspection, which do not increase work-hours. The increased estimated cost of this AD is due to increased labor cost and parts cost from 1987 when AD 87–20–03 R2 was issued.

We estimate the following costs to do the proposed inspections:

Labor cost	Parts cost	Total cost per airplane	Total cost on U.S. operators
1 work-hour × $85 per hour = $85	Not applicable	$85	$3,060,000

We estimate the following costs to do any necessary replacements that would be required based on the results of the proposed inspection. We have no way of determining the number of airplanes that may need this replacement:

Labor cost	Parts cost	Total cost per airplane
Seat rail: 2 work-hours × $85 per hour = $170 per rail	$225 per rail	$395
Seat roller kit: 2 work-hours per seat (less per leg) × $85 per hour = $170	110	280
Miscellaneous parts, such as seat rollers, washers, bushings, bolts, lock pin springs, etc.: 1 work-hour per seat × $85 per hour = $85.	15	100

Authority for This Rulemaking

Title 49 of the United States Code specifies the FAA's authority to issue rules on aviation safety. Subtitle I, section 106, describes the authority of the FAA Administrator. Subtitle VII, Aviation Programs, describes in more detail the scope of the Agency's authority.

We are issuing this rulemaking under the authority described in subtitle VII, part A, subpart III, section 44701, "General requirements." Under that section, Congress charges the FAA with promoting safe flight of civil aircraft in air commerce by prescribing regulations for practices, methods, and procedures the Administrator finds necessary for safety in air commerce. This regulation is within the scope of that authority because it addresses an unsafe condition that is likely to exist or develop on products identified in this rulemaking action.

Regulatory Findings

We have determined that this proposed AD would not have federalism implications under Executive Order 13132. This proposed AD would not have a substantial direct effect on the States, on the relationship between the national Government and the States, or on the distribution of power and responsibilities among the various levels of government.

For the reasons discussed above, I certify that the proposed regulation:

1. Is not a "significant regulatory action" under Executive Order 12866;

2. Is not a "significant rule" under the DOT Regulatory Policies and Procedures (44 FR 11034, February 26, 1979); and

3. Will not have a significant economic impact, positive or negative, on a substantial number of small entities under the criteria of the Regulatory Flexibility Act.

We prepared a regulatory evaluation of the estimated costs to comply with this proposed AD and placed it in the AD docket.

Examining the AD Docket

You may examine the AD docket that contains the proposed AD, the regulatory evaluation, any comments received, and other information on the Internet at *http://www.regulations.gov;* or in person at the Docket Management Facility between 9 a.m. and 5 p.m., Monday through Friday, except Federal holidays. The Docket Office (telephone (800) 647–5527) is located at the street address stated in the **ADDRESSES** section. Comments will be available in the AD docket shortly after receipt.

List of Subjects in 14 CFR Part 39

Air transportation, Aircraft, Aviation safety, Incorporation by reference, Safety.

The Proposed Amendment

Accordingly, under the authority delegated to me by the Administrator, the FAA proposes to amend 14 CFR part 39 as follows:

PART 39—AIRWORTHINESS DIRECTIVES

1. The authority citation for part 39 continues to read as follows:

Authority: 49 U.S.C. 106(g), 40113, 44701.

§ 39.13 [Amended]

2. The FAA amends § 39.13 by removing Airworthiness Directive (AD) 87–20–03 R2, Amendment 39–6669, and adding the following new AD:

Cessna Aircraft Company: Docket No. FAA–2010–1101; Directorate Identifier 2009–CE–013–AD.

Comments Due Date

(a) We must receive comments on this airworthiness directive (AD) action by December 23, 2010.

Affected ADs

(b) This AD supersedes AD 87–20–03 R2, Amendment 39–6669.

Applicability

(c) This AD applies to all serial numbers of the following Cessna Aircraft Company (Cessna) Models that are certificated in any category:

Models
150A, 150B, 150C, 150D, 150E, 150F, 150G, 150H, 150J, 150K, 150L, 150M, A150K, A150L, A150M, F150F, F150G, F150H, F150J, F150K, F150L, F150M, FA150K, FA150L, FA150M, FRA150L, and FRA150M
152, A152, F152, and FA152
170, 170A, and 170B
172, 172A, 172B, 172C, 172D, 172E, 172F (USAF T–41A), 172G, 172H (USAF T–41A), 172I, 172K, 172L, 172M, 172N, 172P, 172Q, 172RG, F172D, F172E, F172F, F172G, F172H, F172K, F172L, F172M, F172N, F172P, FR172E, FR172F, FR172G, FR172H, FR172J, FR172K, P172D, R172E (USAF T-41B) (USAF T–41C and D), R172F (USAF T–41D), R172G (USAF T–41C or D), R172H (USAF T–41D), R172J, and R172K
175, 175A, 175B, and 175C
177, 177A, 177B, 177RG, and F177RG
180, 180A, 180B, 180C, 180D, 180E, 180F, 180G, 180H, 180J, and 180K
182, 182A, 182B, 182C, 182D, 182E, 182F, 182G, 182H, 182J, 182K, 182L, 182M, 182N, 182P, 182Q, 182R, F182P, F182Q, FR182, R182, T182, and TR182
185, 185A, 185B, 185C, 185D, 185E, A185E, and A185F
188, 188A, A188, A188A, 188B, A188B, and T188C
190
195, 195A, and 195B
206, P206, P206A, P206B, P206C, P206D, P206E, TP206A, TP206B, TP206C, TP206D, TP206E, TU206A, TU206B, TU206C, TU206D, TU206E, TU206F, TU206G, U206, U206A,U206B, U206C, U206D, U206E, U206F, and U206G
207, 207A, T207, and T207A
210, 210–5 (205), 210–5A (205A), 210A, 210B, 210C, 210D, 210E, 210F, 210G, 210H, 210J, 210K, 210L, 210M, 210N, 210R, P210N, P210R, T210F, T210G, T210H, T210J, T210K, T210L, T210M, T210N, and T210R
T303
336
337, 337A, 337B, 337C, 337D, 337E, 337F, 337G, 337H, F337E, F337F, F337G, F337H, FT337E, FT337F, FT337GP, FT337HP, M337B, P337H, T337B, T337C, T337D, T337E, T337F, T337G, T337H, and T337H–SP

Unsafe Condition

(d) This AD results from reports of seats slipping on the rails where the primary latch pin for the pilot/copilot seat is not properly engaged in the seat rail/track and reports of the seat roller housing departing the seat rail. We are issuing this AD to prevent seat slippage or the seat roller housing from departing the seat rail, which may consequently cause the pilot/copilot to be unable to reach all the controls. This failure could lead to the pilot/copilot losing control of the airplane.

Compliance

(e) For all airplanes, to address the unsafe condition described in paragraph (d) of this AD, you must do the following actions on the seat rails; seat rollers, washers, and axle bolts or bushings; seat roller housings and the tangs; and lock pin springs, unless already done, initially within the next 100 hours time-in-service (TIS) after the last inspection done following AD 87–20–03 R2 or within the next 12 calendar months after the effective date of this AD, whichever occurs first. Repetitively thereafter do the actions at intervals not to exceed every 100 hours TIS or every 12 months, whichever occurs first:

(1) Visually inspect the pilot and copilot seat rails for dirt and debris that may prevent engagement of the seat locking pins. Before further flight, after any inspection where dirt or debris is found, remove the dirt or debris found.

(2) Lift up the forward edge of each seat to eliminate vertical play of the seat locking pin

in the engagement hole, and from this position, inspect the depth of engagement of each seat locking pin (see figure 2). If the rail is worn, this depth is measured from the worn surface, not the manufactured surface.

(i) If engagement of any of the seat locking pins measures less than 0.15 of an inch, before further flight, replace or repair any seat components necessary to achieve a seat pin engagement of a minimum of 0.15 of an inch.

(ii) Repair or replacement of necessary seat components does not terminate the repetitive actions required in paragraph (e) of this AD.

(3) Remove the seat from the seat rail.

(i) Remove the seat stops.

(ii) Disengage seat belt/shoulder harness from the seat, if necessary.

(iii) Raise vertical adjusting seats to maximum height.

(iv) Hold seat latches disengaged and slide the seat forward and aft to disengage rollers.

(v) Lift the seat out of the airplane.

(4) Inspect the diameter of each seat locking pin engagement hole in the pilot and copilot seat rails for excessive wear. Due to wear on the rail surface at the hole opening, we allow this measurement 0.020 of an inch below the surface of the rail. You must take this measurement somewhere between the surface of the rail or no more than 0.020 of an inch below the surface of the rail.

(i) If the diameter of any of the holes is 0.42 of an inch or more (see figure 1), before further flight, replace the rail.

(ii) Rail replacement does not terminate the repetitive actions required in paragraph (e) of this AD.

BILLING CODE 4910–13–P

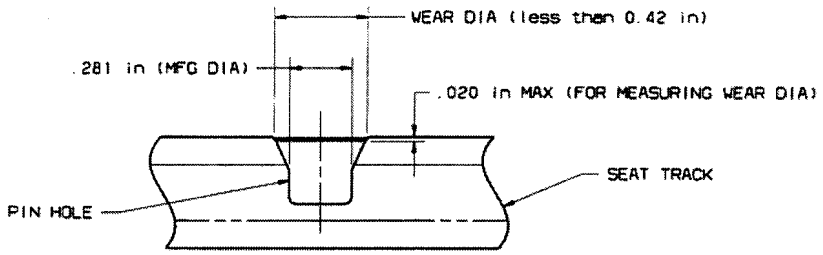

Figure 1. Diameter of seat pin locking engagement hole

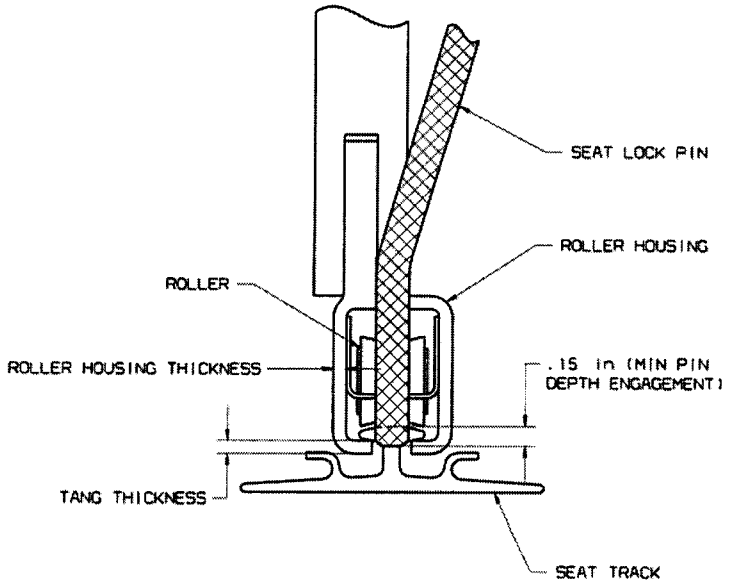

Figure 2. Seat locking pin depth engagement

(5) Visually inspect the seat rollers for flat spots and inspect the rollers and washers for binding. Assure all rollers and washers, which are meant to rotate, turn freely on their axles (or bushings if installed).

(i) Before further flight, replace any rollers with flat spots and any worn washers.

(ii) Before further flight, remove and clean the parts if there is any binding between the bores of the rollers, washers, or axles.

(iii) Do not lubricate the rollers, washers, or axles because the lubricant will attract dust and other particles that may cause binding.

(6) Inspect the thickness of the tang (see figure 2 and figure 3). Due to wear of the tang chafing against the seat rail, measure the tang thickness where the tang inner edges contact the seat rail.

(i) If the tang thickness measures less than 0.05 of an inch, before further flight replace the roller housing.

(ii) Replacement of the roller housing does not terminate the repetitive actions required in paragraph (e) of this AD.

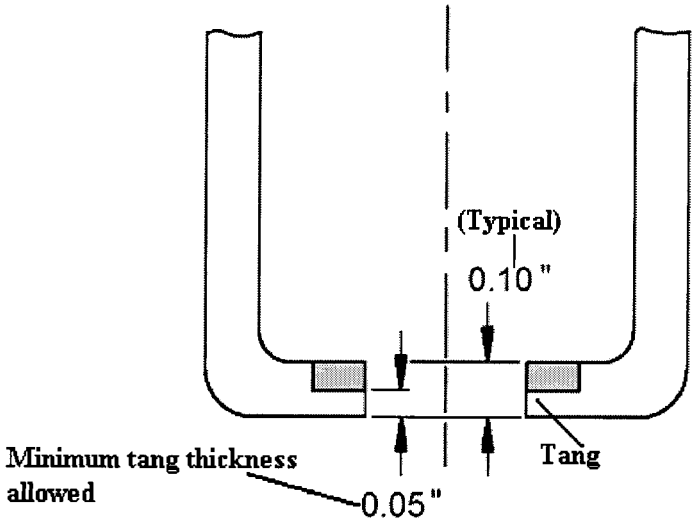

Figure 3. Closeup of seat roller housing and tang thickness

(7) Inspect the inner edges of the tangs. Due to wear or deformation of the tangs, measure the distance from one tang inner edge to the other tang inner edge (see figure 4).

(i) The maximum distance allowed between tang edges is 0.44 inches. If the distance between tang inner edges measures 0.44 of an inch or more, before further flight, replace the roller housing.

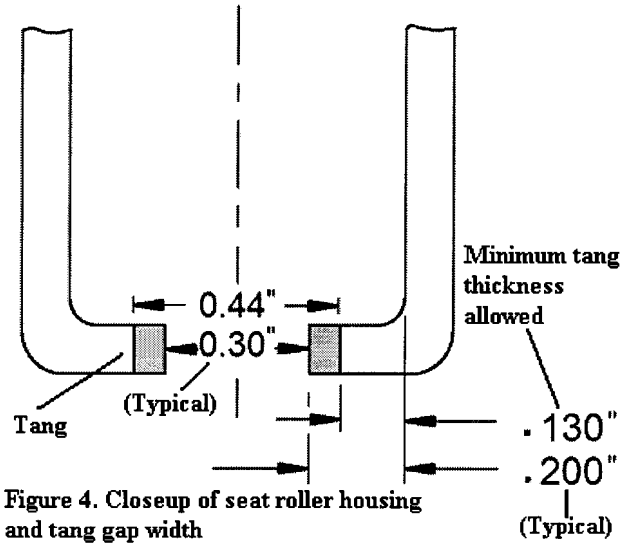

Figure 4. Closeup of seat roller housing and tang gap width

(ii) The minimum measurement allowed for the remaining tang is 0.130 inches remaining on either of the tangs, from the inner edge of the tang to the bend of the roller housing. If the measurement is less than 0.130 inches on either of the tangs, before further flight, replace the roller housing.

(iii) Replacement of the roller housing does not terminate the repetitive actions required in paragraph (e) of this AD.

(8) Inspect the springs that keep the lock pins in position in the rail holes for positive engagement action. Before further flight, replace any spring that does not provide positive engagement.

(9) Visually inspect the seat rails for cracks.

(i) If there are seat rail cracks that exceed the crack criteria in figure 5, before further flight, replace the seat rail.

(ii) Replacement of the seat rail does not terminate the repetitive actions required in paragraph (e) of this AD.

BILLING CODE 4910–13–P

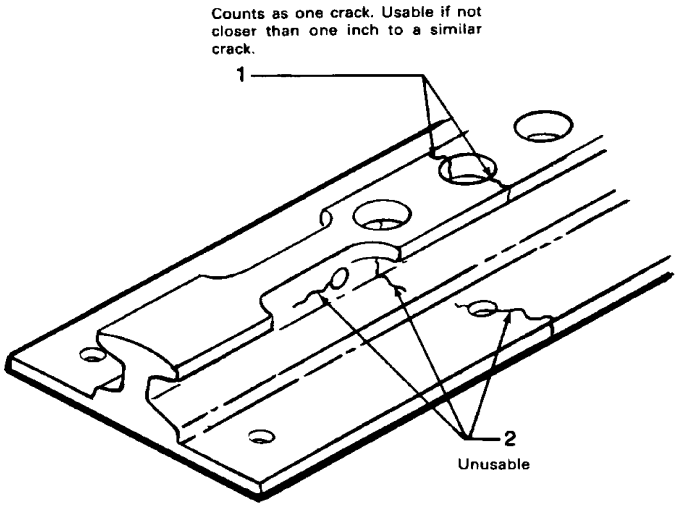

REPLACE SEAT RAIL WHEN:

(1) Any portion of web or lower flange is cracked (index 2).
(2) Any crack in crown of rail is in any direction other than right angle to length of rail.
(3) Number of cracks on any one rail exceeds four, or any two cracks (index 1) are closer than one inch.

NOTE

Use of seat rail cargo tie-downs is not permissible on seat rails with cracks.

Figure 5. Seat rail

(10) Reinstall the seat on the seat rail.

(i) Lift the seat into the airplane and place on the seat rail.

(ii) Hold seat latch disengaged and slide the seat aft and then forward to re-engage rollers.

(iii) Lower vertical adjusting seats to a comfortable height.

(iv) Reattach seat belt/shoulder harness to the seat, if previously attached to the seat.

(v) Reinstall the seat stops.

Alternative Methods of Compliance (AMOCs)

(g) The Manager, Wichita Aircraft Certification Office (ACO), FAA, has the authority to approve AMOCs for this AD, if requested using the procedures found in 14 CFR 39.19. Send information to ATTN: Gary Park, Aerospace Engineer, ACE–118W, Wichita Aircraft Certification Office (ACO), 1801 Airport Road, Room 100, Wichita, Kansas 67209; telephone: (316) 946–4123; fax: (316) 946–4107. Before using any approved AMOC on any airplane to which the AMOC applies, notify your appropriate principal inspector (PI) in the FAA Flight Standards District Office (FSDO), or lacking a PI, your local FSDO.

(h) AMOCs approved for AD 87–20–03 R2 are approved for this AD.

Related Information

(i) To view the AD docket, go to U.S. Department of Transportation, Docket Operations, M–30, West Building Ground Floor, Room W12–140, 1200 New Jersey Avenue, SE., Washington, DC 20590, or on the Internet at *http://www.regulations.gov.*

Issued in Kansas City, Missouri on November 1, 2010.

John Colomy,

Acting Manager, Small Airplane Directorate, Aircraft Certification Service.

[FR Doc. 2010–28158 Filed 11–5–10; 8:45 am]

BILLING CODE 4910–13–C

DEPARTMENT OF TRANSPORTATION

Federal Aviation Administration

14 CFR Part 39

[Docket No. FAA–2010–1045; Directorate Identifier 2010–NM–101–AD]

RIN 2120–AA64

Airworthiness Directives; Airbus Model A318, A319, A320, and A321 Series Airplanes

AGENCY: Federal Aviation Administration (FAA), DOT.

ACTION: Notice of proposed rulemaking (NPRM).

SUMMARY: We propose to adopt a new airworthiness directive (AD) for the products listed above that would supersede an existing AD. This proposed AD results from mandatory continuing airworthiness information (MCAI) originated by an aviation authority of another country to identify and correct an unsafe condition on an aviation product. The MCAI describes the unsafe condition as:

One case of elevator servo-control disconnection has been experienced on an aeroplane of the A320 family. Investigation has revealed that the failure occurred at the servo-control rod eye-end.

Further to this finding, additional inspections have revealed cracking at the same location on a number of other servo-control rod eye-ends. In several cases, both actuators of the same elevator surface were affected. The root cause of the cracking has not yet been determined and tests are ongoing.

A dual servo-control disconnection on the same elevator could result in an uncontrolled surface, the elevator surface being neither actuated nor damped, which could lead to reduced control of the aeroplane.

* * * * *

The proposed AD would require actions that are intended to address the unsafe condition described in the MCAI.

DATES: We must receive comments on this proposed AD by December 23, 2010.

ADDRESSES: You may send comments by any of the following methods:

- *Federal eRulemaking Portal:* Go to *http://www.regulations.gov*. Follow the instructions for submitting comments.
- *Fax:* (202) 493–2251.
- *Mail:* U.S. Department of Transportation, Docket Operations, M–30, West Building Ground Floor, Room W12–140, 1200 New Jersey Avenue, SE., Washington, DC 20590.
- *Hand Delivery:* U.S. Department of Transportation, Docket Operations, M–30, West Building Ground Floor, Room W12–40, 1200 New Jersey Avenue, SE., Washington, DC, between 9 a.m. and 5 p.m., Monday through Friday, except Federal holidays.

For service information identified in this proposed AD, contact Airbus, Airworthiness Office—EAS, 1 Rond Point Maurice Bellonte, 31707 Blagnac Cedex, France; telephone +33 5 61 93 36 96; fax +33 5 61 93 44 51; e-mail: *account.airworth-eas@airbus.com;* Internet *http://www.airbus.com*. You may review copies of the referenced service information at the FAA, Transport Airplane Directorate, 1601 Lind Avenue, SW., Renton, Washington. For information on the availability of this material at the FAA, call 425–227–1221.

Examining the AD Docket

You may examine the AD docket on the Internet at *http://www.regulations.gov;* or in person at the Docket Operations office between 9 a.m. and 5 p.m., Monday through Friday, except Federal holidays. The AD docket contains this proposed AD, the regulatory evaluation, any comments received, and other information. The street address for the Docket Operations office (telephone (800) 647–5527) is in the **ADDRESSES** section. Comments will be available in the AD docket shortly after receipt.

FOR FURTHER INFORMATION CONTACT: Tim Dulin, Aerospace Engineer, International Branch, ANM–116, Transport Airplane Directorate, FAA, 1601 Lind Avenue, SW., Renton, Washington 98057–3356; telephone (425) 227–2141; fax (425) 227–1149.

SUPPLEMENTARY INFORMATION:

Comments Invited

We invite you to send any written relevant data, views, or arguments about this proposed AD. Send your comments to an address listed under the **ADDRESSES** section. Include "Docket No. FAA–2010–1045; Directorate Identifier 2010–NM–101–AD" at the beginning of your comments. We specifically invite comments on the overall regulatory, economic, environmental, and energy aspects of this proposed AD. We will consider all comments received by the closing date and may amend this proposed AD based on those comments.

We will post all comments we receive, without change, to *http://www.regulations.gov*, including any personal information you provide. We will also post a report summarizing each substantive verbal contact we receive about this proposed AD.

Discussion

On August 7, 2009, we issued AD 2009–17–04, amendment 39–15995 (74 FR 41611, August 18, 2009). That AD corresponds to the European Aviation Safety Agency (EASA) AD 2008–0149, dated August 5, 2008, and requires a one-time inspection of the elevator servo-control rod eye-ends to detect cracking and in case of findings replacement of the cracked rod eye-end with a serviceable unit and readjusting the elevator servo-control.

Since we issued AD 2009–17–04, the EASA, which is the Technical Agent for the Member States of the European Community, has issued EASA Airworthiness Directive 2010–0046, dated March 19, 2010 (referred to after this as "the MCAI"), to supersede EASA AD 2008–0149 to correct an unsafe condition for the specified products. The MCAI states:

> One case of elevator servo-control disconnection has been experienced on an aeroplane of the A320 family. Investigation has revealed that the failure occurred at the servo-control rod eye-end.
>
> Further to this finding, additional inspections have revealed cracking at the same location on a number of other servo-control rod eye-ends. In several cases, both actuators of the same elevator surface were affected. The root cause of the cracking has not yet been determined and tests are ongoing.
>
> A dual servo-control disconnection on the same elevator could result in an uncontrolled surface, the elevator surface being neither actuated nor damped, which could lead to reduced control of the aeroplane.
>
> To address this unsafe condition, EASA AD 2008–0149 [which corresponds to FAA AD 2009–17–04] was issued to require a one-time inspection of the elevator servo-control rod eye-ends for aeroplanes which have accumulated more than 10,000 total Flight Cycles (FC) since aeroplane first flight and, in case of findings, the accomplishment of corrective actions. As a result of this one-time inspection campaign, a significant number of rod eye-ends have been found cracked. In addition, some cracks have been reported on rod eye-ends that had not yet accumulated the 10,000 FC of the established threshold.
>
> For the reason described above, this AD partially retains the initial inspection requirement of EASA AD 2008–0149, which is superseded, reduces the compliance time of the initial inspections and introduces a repetitive inspection program.

The corrective actions include replacing any cracked rod eye-end with a serviceable unit and re-adjusting the elevator servo-control. You may obtain further information by examining the MCAI in the AD docket.

Relevant Service Information

Airbus has issued Mandatory Service Bulletin A320–27A1186, Revision 05, including Appendices 1 through 6, dated March 10, 2010. The actions described in this service information are intended to correct the unsafe condition identified in the MCAI.

FAA's Determination and Requirements of This Proposed AD

This product has been approved by the aviation authority of another country, and is approved for operation in the United States. Pursuant to our bilateral agreement with the State of Design Authority, we have been notified of the unsafe condition described in the MCAI and service information referenced above. We are proposing this AD because we evaluated all pertinent information and determined an unsafe condition exists and is likely to exist or develop on other products of the same type design.

Differences Between This AD and the MCAI or Service Information

We have reviewed the MCAI and related service information and, in general, agree with their substance. But we might have found it necessary to use different words from those in the MCAI to ensure the AD is clear for U.S. operators and is enforceable. In making these changes, we do not intend to differ substantively from the information provided in the MCAI and related service information.

We might also have proposed different actions in this AD from those in the MCAI in order to follow FAA policies. Any such differences are highlighted in a NOTE within the proposed AD.

Costs of Compliance

Based on the service information, we estimate that this proposed AD would affect about 770 products of U.S. registry.

The actions that are required by AD 2009–17–04 and retained in this proposed AD take about 13 work-hours per product, at an average labor rate of $85 per work hour. Based on these

figures, the estimated cost of the currently required actions is $1,105 per product.

We estimate that it would take about 12 work-hours per product to comply with the new basic requirements of this proposed AD. The average labor rate is $85 per work-hour. Based on these figures, we estimate the cost of the proposed AD on U.S. operators to be $785,400, or $1,020 per product.

Authority for This Rulemaking

Title 49 of the United States Code specifies the FAA's authority to issue rules on aviation safety. Subtitle I, section 106, describes the authority of the FAA Administrator. "Subtitle VII: Aviation Programs," describes in more detail the scope of the Agency's authority.

We are issuing this rulemaking under the authority described in "Subtitle VII, Part A, Subpart III, Section 44701: General requirements." Under that section, Congress charges the FAA with promoting safe flight of civil aircraft in air commerce by prescribing regulations for practices, methods, and procedures the Administrator finds necessary for safety in air commerce. This regulation is within the scope of that authority because it addresses an unsafe condition that is likely to exist or develop on products identified in this rulemaking action.

Regulatory Findings

We determined that this proposed AD would not have federalism implications under Executive Order 13132. This proposed AD would not have a substantial direct effect on the States, on the relationship between the national Government and the States, or on the distribution of power and responsibilities among the various levels of government.

For the reasons discussed above, I certify this proposed regulation:

1. Is not a "significant regulatory action" under Executive Order 12866;
2. Is not a "significant rule" under the DOT Regulatory Policies and Procedures (44 FR 11034, February 26, 1979); and
3. Will not have a significant economic impact, positive or negative, on a substantial number of small entities under the criteria of the Regulatory Flexibility Act.

We prepared a regulatory evaluation of the estimated costs to comply with this proposed AD and placed it in the AD docket.

List of Subjects in 14 CFR Part 39

Air transportation, Aircraft, Aviation safety, Incorporation by reference, Safety.

The Proposed Amendment

Accordingly, under the authority delegated to me by the Administrator, the FAA proposes to amend 14 CFR part 39 as follows:

PART 39—AIRWORTHINESS DIRECTIVES

1. The authority citation for part 39 continues to read as follows:

Authority: 49 U.S.C. 106(g), 40113, 44701.

§ 39.13 [Amended]

2. The FAA amends § 39.13 by removing amendment 39–15995 (74 FR 41611, August 18, 2009) and adding the following new AD:

Airbus: Docket No. FAA–2010–1045; Directorate Identifier 2010–NM–101–AD.

Comments Due Date

(a) We must receive comments by December 23, 2010.

Affected ADs

(b) This AD supersedes AD 2009–17–04, amendment 39–15995.

Applicability

(c) This AD applies to Airbus Model A318–111, –112, –121, and –122; A319–111, –112, –113, –114, –115, –131, –132, and –133; A320–111, –211, –212, –214, –231, –232, –233; and A321–111, –112, –131, –211, –212, –213, –231, and –232 airplanes; certificated in any category; all manufacturer serial numbers.

Subject

(d) Air Transport Association (ATA) of America Code 27: Flight controls.

Reason

(e) The mandatory continuing airworthiness information (MCAI) states:

One case of elevator servo-control disconnection has been experienced on an aeroplane of the A320 family. Investigation has revealed that the failure occurred at the servo-control rod eye-end.

Further to this finding, additional inspections have revealed cracking at the same location on a number of other servo-control rod eye-ends. In several cases, both actuators of the same elevator surface were affected. The root cause of the cracking has not yet been determined and tests are ongoing.

A dual servo-control disconnection on the same elevator could result in an uncontrolled surface, the elevator surface being neither actuated nor damped, which could lead to reduced control of the aeroplane.

* * * * *

Compliance

(f) You are responsible for having the actions required by this AD performed within the compliance times specified, unless the actions have already been done.

Restatement of Requirements of AD 2009–17–04, With Reduced and Revised Compliance Times and Revised Service Information

(g) Unless already done, do the following actions.

(1) At the applicable times specified in paragraphs (g)(1)(i) and (g)(1)(ii) of this AD: Inspect both the left-hand and right-hand inboard elevator servo-control rod eye-ends for cracking, in accordance with the instructions of Airbus All Operators Telex (AOT) A320–27A1186, Revision 04, dated April 3, 2009; or the Accomplishment Instructions of Airbus Mandatory Service Bulletin A320–27A1186, Revision 05, dated March 10, 2010. As of the effective date of this AD, use only Airbus Mandatory Service Bulletin A320–27A1186, Revision 05, dated March 10, 2010.

(i) For airplanes that have accumulated 10,000 total flight cycles or more as of September 22, 2009 (the effective date of AD 2009–17–04): At the later of the times specified in paragraphs (g)(1)(i)(A) and (g)(1)(i)(B) of this AD.

(A) Within 1,500 flight cycles after September 22, 2009.

(B) Within 1,500 flight cycles after accumulating 10,000 total flight cycles since first flight of the airplane.

(ii) For airplanes that have accumulated less than 10,000 total flight cycles as of September 22, 2009: At the later of the times specified in paragraphs (g)(1)(ii)(A) and (g)(1)(ii)(B) of this AD.

(A) Before the accumulation of 5,000 total flight cycles.

(B) Within 20 months after the effective date of this AD but no later than before the accumulation of 11,500 total flight cycles.

(2) At the applicable time specified in paragraphs (g)(2)(i) and (g)(2)(ii) of this AD: Inspect both the left-hand and right-hand outboard elevator servo-control rod eye-ends for cracking, in accordance with the instructions of Airbus AOT A320–27A1186, Revision 04, dated April 3, 2009; or the Accomplishment Instructions of Airbus Mandatory Service Bulletin A320–27A1186, Revision 05, dated March 10, 2010. As of the effective date of this AD, use only Airbus Mandatory Service Bulletin A320–27A1186, Revision 05, dated March 10, 2010.

(i) For airplanes that have accumulated 10,000 total flight cycles or more as of September 22, 2009: At the later of the times specified in paragraphs (g)(2)(i)(A) and (g)(2)(i)(B) of this AD.

(A) Within 3,000 flight cycles after September 22, 2009.

(B) Within 3,000 flight cycles after accumulating 10,000 total flight cycles since first flight of the airplane.

(ii) For airplanes that have accumulated less than 10,000 total flight cycles as of September 22, 2009: At the later of the times specified in paragraphs (g)(2)(ii)(A) and (g)(2)(ii)(B) of this AD.

(A) Before the accumulation of 7,500 total flight cycles.

(B) Within 40 months after the effective date of this AD but no later than before the accumulation of 13,000 total flight cycles.

(3) Submit a report of the findings of the inspection required by paragraphs (g)(1) and

(g)(2) of this AD to Airbus in accordance with the instructions of Airbus AOT A320–27A1186, Revision 04, dated April 3, 2009; or the Accomplishment Instructions of Airbus Mandatory Service Bulletin A320–27A1186, Revision 05, dated March 10, 2010; at the applicable time specified in paragraph (g)(3)(i) or (g)(3)(ii) of this AD. As of the effective date of this AD, use only Airbus Mandatory Service Bulletin A320–27A1186, Revision 05, dated March 10, 2010.

(i) If the inspection was done after September 22, 2009: Submit the report within 40 days after the inspection.

(ii) If the inspection was done before September 22, 2009: Submit the report within 40 days after September 22, 2009.

New Requirements of This AD

Actions

(h) Repeat the inspections of the left-hand and right-hand inboard and outboard elevator servo-control rod eye-ends for cracking as required by paragraphs (g)(1) and (g)(2) of this AD at the later of the times specified in paragraph (h)(1) or (h)(2) of this AD. Repeat the inspections thereafter at intervals not to exceed 5,000 flight cycles.

(1) Within 5,000 flight cycles after the last inspection required by paragraph (g)(1) or (g)(2) of this AD as applicable.

(2) Within 6 months after the effective date of this AD.

(i) If any cracking is found during any inspection required by this AD, before further flight, accomplish all applicable corrective actions in accordance with the Accomplishment Instructions and figures of Airbus Mandatory Service Bulletin A320–27A1186, Revision 05, dated March 10, 2010.

(j) As of the effective date of this AD, no person may install on any airplane an elevator servo-control rod eye-end unless it is new or has been inspected in accordance with the Accomplishment Instructions of Airbus Mandatory Service Bulletin A320–27A1186, Revision 05, dated March 10, 2010, with no crack findings.

(k) Actions done before the effective date of this AD, in accordance with the service information specified in Table 1 of this AD are acceptable for compliance with the corresponding requirements of paragraphs (g)(1) and (g)(2) of this AD.

TABLE 1—CREDIT SERVICE INFORMATION

Airbus AOT—	Revision—	Dated—
A320–27A1186	Original	June 23, 2008.
A320–27A1186	01	August 11, 2008.
A320–27A1186	02	March 30, 2009.
A320–27A1186	03	April 1, 2009.
A320–27A1186	04	April 3, 2009.

FAA AD Differences

Note 1: This AD differs from the MCAI and/or service information as follows: No differences.

Other FAA AD Provisions

(l) The following provisions also apply to this AD:

(1) *Alternative Methods of Compliance (AMOCs):* The Manager, International Branch, Transport Airplane Directorate, FAA, has the authority to approve AMOCs for this AD, if requested using the procedures found in 14 CFR 39.19. Send information to ATTN: Tim Dulin, Aerospace Engineer, International Branch, ANM–116, Transport Airplane Directorate, FAA, 1601 Lind Avenue SW., Renton, Washington 98057–3356; telephone (425) 227–2141; fax (425) 227–1149. Before using any approved AMOC on any airplane to which the AMOC applies, notify your principal maintenance inspector (PMI) or principal avionics inspector (PAI), as appropriate, or lacking a principal inspector, your local Flight Standards District Office. The AMOC approval letter must specifically reference this AD. AMOCs approved previously in accordance with AD 2009–17–04, Amendment 39–15995, are approved as AMOCs for the corresponding provisions of this AD.

(2) *Airworthy Product:* For any requirement in this AD to obtain corrective actions from a manufacturer or other source, use these actions if they are FAA-approved. Corrective actions are considered FAA-approved if they are approved by the State of Design Authority (or their delegated agent). You are required to assure the product is airworthy before it is returned to service.

(3) *Reporting Requirements:* For any reporting requirement in this AD, under the provisions of the Paperwork Reduction Act (44 U.S.C. 3501 *et seq.*), the Office of Management and Budget (OMB) has approved the information collection requirements and has assigned OMB Control Number 2120–0056.

Related Information

(m) Refer to MCAI EASA Airworthiness Directive 2010–0046, dated March 19, 2010; and Airbus Mandatory Service Bulletin A320–27A1186, Revision 05, dated March 10, 2010; for related information.

Issued in Renton, Washington, on October 23, 2010.

Michael Kaszycki,

Acting Manager, Transport Airplane Directorate, Aircraft Certification Service.

[FR Doc. 2010–28172 Filed 11–5–10; 8:45 am]

BILLING CODE 4910–13–P

DEPARTMENT OF TRANSPORTATION

Federal Aviation Administration

14 CFR Part 71

[Docket No. FAA–2010–1028; Airspace Docket No. 10–AGL–16]

Proposed Amendment of Class E Airspace; Greensburg, IN

AGENCY: Federal Aviation Administration (FAA), DOT.

ACTION: Notice of proposed rulemaking (NPRM).

SUMMARY: This action proposes to amend Class E airspace at Greensburg, IN, to accommodate new Standard Instrument Approach Procedures (SIAP) for the Decatur County Memorial Hospital Heliport. The FAA is taking this action to enhance the safety and management of Instrument Flight Rules (IFR) operations at the heliport.

DATES: 0901 UTC. Comments must be received on or before December 23, 2010.

ADDRESSES: Send comments on this proposal to the U.S. Department of Transportation, Docket Operations, 1200 New Jersey Avenue, SE., West Building Ground Floor, Room W12–140, Washington, DC 20590–0001. You must identify the docket number FAA–2010–1028/Airspace Docket No. 10–AGL–16, at the beginning of your comments. You may also submit comments through the Internet at *http://www.regulations.gov.* You may review the public docket containing the proposal, any comments received, and any final disposition in person in the Dockets Office between 9 a.m. and 5 p.m., Monday through Friday, except Federal holidays. The Docket Office (telephone 1–800–647–5527), is on the ground floor of the building at the above address.

FOR FURTHER INFORMATION CONTACT: Scott Enander, Central Service Center, Operations Support Group, Federal Aviation Administration, Southwest Region, 2601 Meacham Blvd., Fort Worth, TX 76137; telephone: 817–321–7716.

SUPPLEMENTARY INFORMATION:

Comments Invited

Interested parties are invited to participate in this proposed rulemaking by submitting such written data, views, or arguments, as they may desire. Comments that provide the factual basis supporting the views and suggestions presented are particularly helpful in developing reasoned regulatory decisions on the proposal. Comments are specifically invited on the overall regulatory, aeronautical, economic, environmental, and energy-related aspects of the proposal. Communications should identify both docket numbers and be submitted in triplicate to the address listed above. Commenters wishing the FAA to acknowledge receipt of their comments on this notice must submit with those comments a self-addressed, stamped postcard on which the following statement is made: "Comments to Docket No. FAA–2010–1028/Airspace Docket No. 10–AGL–16." The postcard will be date/time stamped and returned to the commenter.

Availability of NPRMs

An electronic copy of this document may be downloaded through the Internet at *http://www.regulations.gov.* Recently published rulemaking documents can also be accessed through the FAA's web page at *http://www.faa.gov/airports_airtraffic/air_traffic/publications/airspace_amendments/.*

You may review the public docket containing the proposal, any comments received and any final disposition in person in the Dockets Office (*see* **ADDRESSES** section for address and phone number) between 9 a.m. and 5 p.m., Monday through Friday, except Federal holidays. An informal docket may also be examined during normal business hours at the office of the Central Service Center, 2601 Meacham Blvd., Fort Worth, TX 76137.

Persons interested in being placed on a mailing list for future NPRMs should contact the FAA's Office of Rulemaking 202–267–9677, to request a copy of Advisory Circular No. 11–2A, Notice of Proposed Rulemaking Distribution System, which describes the application procedure.

The Proposal

This action proposes to amend Title 14, Code of Federal Regulations (14 CFR), part 71 by adding Class E airspace extending upward from 700 feet above the surface for a new COPTER RNAV (POINT-IN-SPACE) SIAP for the Decatur County Memorial Hospital Heliport, Greensburg, IN. Controlled airspace is needed for the safety and management of IFR operations at the airport.

Class E airspace areas are published in Paragraph 6005 of FAA Order 7400.9U, dated August 18, 2010, and effective September 15, 2010, which is incorporated by reference in 14 CFR 71.1. The Class E airspace designation listed in this document would be published subsequently in the Order.

The FAA has determined that this proposed regulation only involves an established body of technical regulations for which frequent and routine amendments are necessary to keep them operationally current. It, therefore, (1) Is not a "significant regulatory action" under Executive Order 12866; (2) is not a "significant rule" under DOT Regulatory Policies and Procedures (44 FR 11034; February 26, 1979); and (3) does not warrant preparation of a Regulatory Evaluation as the anticipated impact is so minimal. Since this is a routine matter that will only affect air traffic procedures and air navigation, it is certified that this rule, when promulgated, will not have a significant economic impact on a substantial number of small entities under the criteria of the Regulatory Flexibility Act.

The FAA's authority to issue rules regarding aviation safety is found in Title 49 of the U.S. Code. Subtitle 1, section 106 describes the authority of the FAA Administrator. Subtitle VII, Aviation Programs, describes in more detail the scope of the agency's authority. This rulemaking is promulgated under the authority described in subtitle VII, part A, subpart I, section 40103. Under that section, the FAA is charged with prescribing regulations to assign the use of airspace necessary to ensure the safety of aircraft and the efficient use of airspace. This regulation is within the scope of that authority as it would add controlled airspace at Decatur County Memorial Hospital Heliport, Greensburg, IN.

List of Subjects in 14 CFR Part 71

Airspace, Incorporation by reference, Navigation (Air).

The Proposed Amendment

In consideration of the foregoing, the Federal Aviation Administration proposes to amend 14 CFR part 71 as follows:

PART 71—DESIGNATION OF CLASS A, B, C, D, AND E AIRSPACE AREAS; AIR TRAFFIC SERVICE ROUTES; AND REPORTING POINTS

1. The authority citation for part 71 continues to read as follows:

Authority: 49 U.S.C. 106(g); 40103, 40113, 40120; E.O. 10854, 24 FR 9565, 3 CFR, 1959–1963 Comp., p. 389.

§ 71.1 [Amended]

2. The incorporation by reference in 14 CFR 71.1 of FAA Order 7400.9U, Airspace Designations and Reporting Points, dated August 18, 2010, and effective September 15, 2010, is amended as follows:

Paragraph 6005 Class E airspace areas extending upward from 700 feet or more above the surface of the earth.

* * * * *

AGL IN E5 Greensburg, IN [Amended]

Greensburg-Decatur County Airport, IN.
(Lat. 39°19′37″ N., long. 85°31′21″ W.)
Decatur County Memorial Hospital Heliport, IN Point In Space
(Lat. 39°21′10″ N., long. 85°29′09″ W.)

That airspace extending upward from 700 feet above the surface within a 6.3-mile radius of Greensburg-Decatur County Airport, and within a 6-mile radius of the Decatur County Memorial Heliport Point in Space at lat. 39°21′10″ N., long. 85°29′09″ W.

Issued in Fort Worth, TX, on October 26, 2010.

Anthony D. Roetzel,

Manager, Operations Support Group, ATO Central Service Center.

[FR Doc. 2010–28101 Filed 11–5–10; 8:45 am]

BILLING CODE 4910–13–P

DEPARTMENT OF TRANSPORTATION

Federal Aviation Administration

14 CFR Part 71

[Docket No. FAA–2010–1032; Airspace Docket No. 10–AGL–20]

Proposed Amendment of Class E Airspace; Muncie, IN

AGENCY: Federal Aviation Administration (FAA), DOT.

ACTION: Notice of proposed rulemaking (NPRM).

SUMMARY: This action proposes to amend Class E airspace at Muncie, IN to accommodate new Standard Instrument Approach Procedures (SIAP) for the Ball Memorial Hospital Heliport. The FAA is taking this action to enhance the safety and management of Instrument Flight Rules (IFR) operations.

DATES: 0901 UTC. Comments must be received on or before December 23, 2010.

ADDRESSES: Send comments on this proposal to the U.S. Department of Transportation, Docket Operations, 1200 New Jersey Avenue, SE., West Building Ground Floor, Room W12–140,

Washington, DC 20590–0001. You must identify the docket number FAA–2010–1032/Airspace Docket No. 10–AGL–20, at the beginning of your comments. You may also submit comments through the Internet at *http://www.regulations.gov*. You may review the public docket containing the proposal, any comments received, and any final disposition in person in the Dockets Office between 9 a.m. and 5 p.m., Monday through Friday, except Federal holidays. The Docket Office (telephone 1–800–647–5527), is on the ground floor of the building at the above address.

FOR FURTHER INFORMATION CONTACT: Scott Enander, Central Service Center, Operations Support Group, Federal Aviation Administration, Southwest Region, 2601 Meacham Blvd., Fort Worth, TX 76137; telephone: 817–321–7716.

SUPPLEMENTARY INFORMATION:

Comments Invited

Interested parties are invited to participate in this proposed rulemaking by submitting such written data, views, or arguments, as they may desire. Comments that provide the factual basis supporting the views and suggestions presented are particularly helpful in developing reasoned regulatory decisions on the proposal. Comments are specifically invited on the overall regulatory, aeronautical, economic, environmental, and energy-related aspects of the proposal. Communications should identify both docket numbers and be submitted in triplicate to the address listed above. Commenters wishing the FAA to acknowledge receipt of their comments on this notice must submit with those comments a self-addressed, stamped postcard on which the following statement is made: "Comments to Docket No. FAA–2010–1032/Airspace Docket No. 10–AGL–20." The postcard will be date/time stamped and returned to the commenter.

Availability of NPRMs

An electronic copy of this document may be downloaded through the Internet at *http://www.regulations.gov*. Recently published rulemaking documents can also be accessed through the FAA's Web page at *http://www.faa.gov/airports_airtraffic/air_traffic/publications/airspace_amendments/*.

You may review the public docket containing the proposal, any comments received and any final disposition in person in the Dockets Office (*see* **ADDRESSES** section for address and phone number) between 9 a.m. and 5 p.m., Monday through Friday, except Federal holidays. An informal docket may also be examined during normal business hours at the office of the Central Service Center, 2601 Meacham Blvd., Fort Worth, TX 76137.

Persons interested in being placed on a mailing list for future NPRMs should contact the FAA's Office of Rulemaking 202–267–9677, to request a copy of Advisory Circular No. 11–2A, Notice of Proposed Rulemaking Distribution System, which describes the application procedure.

The Proposal

This action proposes to amend title 14, Code of Federal Regulations (14 CFR), part 71 by adding Class E airspace extending upward from 700 feet above the surface for a new COPTER RNAV (POINT-IN-SPACE) SIAP for the Ball Memorial Hospital Heliport, Muncie, IN. Controlled airspace is needed for the safety and management of IFR operations at the heliport.

Class E airspace areas are published in Paragraph 6005 of FAA Order 7400.9U, dated August 18, 2010, and effective September 15, 2010, which is incorporated by reference in 14 CFR 71.1. The Class E airspace designation listed in this document would be published subsequently in the Order.

The FAA has determined that this proposed regulation only involves an established body of technical regulations for which frequent and routine amendments are necessary to keep them operationally current. It, therefore, (1) Is not a "significant regulatory action" under Executive Order 12866; (2) is not a "significant rule" under DOT Regulatory Policies and Procedures (44 FR 11034; February 26, 1979); and (3) does not warrant preparation of a Regulatory Evaluation as the anticipated impact is so minimal. Since this is a routine matter that will only affect air traffic procedures and air navigation, it is certified that this rule, when promulgated, will not have a significant economic impact on a substantial number of small entities under the criteria of the Regulatory Flexibility Act.

The FAA's authority to issue rules regarding aviation safety is found in title 49 of the U.S. Code. Subtitle 1, section 106 describes the authority of the FAA Administrator. Subtitle VII, Aviation Programs, describes in more detail the scope of the agency's authority. This rulemaking is promulgated under the authority described in subtitle VII, part A, subpart I, section 40103. Under that section, the FAA is charged with prescribing regulations to assign the use of airspace necessary to ensure the safety of aircraft and the efficient use of airspace. This regulation is within the scope of that authority as it would add controlled airspace for the Ball Memorial Hospital Heliport, Muncie, IN.

List of Subjects in 14 CFR Part 71

Airspace, Incorporation by reference, Navigation (Air).

The Proposed Amendment

In consideration of the foregoing, the Federal Aviation Administration proposes to amend 14 CFR part 71 as follows:

PART 71—DESIGNATION OF CLASS A, B, C, D, AND E AIRSPACE AREAS; AIR TRAFFIC SERVICE ROUTES; AND REPORTING POINTS

■ 1. The authority citation for part 71 continues to read as follows:

Authority: 49 U.S.C. 106(g); 40103, 40113, 40120; E.O. 10854, 24 FR 9565, 3 CFR, 1959–1963 Comp., p. 389.

§ 71.1 [Amended]

■ 2. The incorporation by reference in 14 CFR 71.1 of FAA Order 7400.9U, Airspace Designations and Reporting Points, dated August 18, 2010, and effective September 15, 2010, is amended as follows:

Paragraph 6005 Class E airspace areas extending upward from 700 feet or more above the surface of the earth.

* * * * *

AGL IN E5 Muncie, IN [Amended]

Muncie, Delaware County Regional Airport, IN
(Lat. 40°14′33″ N., long. 85°23′45″ W.)
Muncie, Ball Memorial Hospital Heliport, IN Point in Space
(Lat. 40°11′50″ N., long. 85°25′52″ W.)

That airspace extending upward from 700 feet above the surface within a 7-mile radius of Purdue University Airport, and within a 6-mile radius of the Ball Memorial Hospital Heliport point in space at lat. 40°11′50″N., long. 85°25′52″W.

Issued in Fort Worth, TX, on October 26, 2010.

Anthony D. Roetzel,

Manager, Operations Support Group, ATO Central Service Center.

[FR Doc. 2010–28095 Filed 11–5–10; 8:45 am]

BILLING CODE 4910–13–P

DEPARTMENT OF TRANSPORTATION

Federal Aviation Administration

14 CFR Part 71

[Docket No. FAA–2010–1029; Airspace Docket No. 10–AGL–17]

Proposed Amendment of Class E Airspace; Lafayette, Purdue University Airport, IN

AGENCY: Federal Aviation Administration (FAA), DOT.

ACTION: Notice of proposed rulemaking (NPRM).

SUMMARY: This action proposes to amend Class E airspace at Lafayette, IN, to accommodate new Standard Instrument Approach Procedures (SIAP) for the Clarian Arnett Heliport. The FAA is taking this action to enhance the safety and management of Instrument Flight Rules (IFR) operations at the heliport.

DATES: 0901 UTC. Comments must be received on or before December 23, 2010.

ADDRESSES: Send comments on this proposal to the U.S. Department of Transportation, Docket Operations, 1200 New Jersey Avenue, SE., West Building Ground Floor, Room W12–140, Washington, DC 20590–0001. You must identify the docket number FAA–2010–1029/Airspace Docket No. 10–AGL–17, at the beginning of your comments. You may also submit comments through the Internet at *http://www.regulations.gov.* You may review the public docket containing the proposal, any comments received, and any final disposition in person in the Dockets Office between 9 a.m. and 5 p.m., Monday through Friday, except Federal holidays. The Docket Office (telephone 1–800–647–5527), is on the ground floor of the building at the above address.

FOR FURTHER INFORMATION CONTACT: Scott Enander, Central Service Center, Operations Support Group, Federal Aviation Administration, Southwest Region, 2601 Meacham Blvd., Fort Worth, TX 76137; telephone: 817–321–7716.

SUPPLEMENTARY INFORMATION:

Comments Invited

Interested parties are invited to participate in this proposed rulemaking by submitting such written data, views, or arguments, as they may desire. Comments that provide the factual basis supporting the views and suggestions presented are particularly helpful in developing reasoned regulatory decisions on the proposal. Comments are specifically invited on the overall regulatory, aeronautical, economic, environmental, and energy-related aspects of the proposal. Communications should identify both docket numbers and be submitted in triplicate to the address listed above. Commenters wishing the FAA to acknowledge receipt of their comments on this notice must submit with those comments a self-addressed, stamped postcard on which the following statement is made: "Comments to Docket No. FAA–2010–1029/Airspace Docket No. 10–AGL–17." The postcard will be date/time stamped and returned to the commenter.

Availability of NPRMs

An electronic copy of this document may be downloaded through the Internet at *http://www.regulations.gov.* Recently published rulemaking documents can also be accessed through the FAA's Web page at *http://www.faa.gov/airports_airtraffic/air_traffic/publications/airspace_amendments/.*

You may review the public docket containing the proposal, any comments received and any final disposition in person in the Dockets Office (*see* **ADDRESSES** section for address and phone number) between 9 a.m. and 5 p.m., Monday through Friday, except Federal holidays. An informal docket may also be examined during normal business hours at the office of the Central Service Center, 2601 Meacham Blvd, Fort Worth, TX 76137.

Persons interested in being placed on a mailing list for future NPRMs should contact the FAA's Office of Rulemaking 202–267–9677, to request a copy of Advisory Circular No. 11–2A, Notice of Proposed Rulemaking Distribution System, which describes the application procedure.

The Proposal

This action proposes to amend title 14, Code of Federal Regulations (14 CFR), part 71 by adding Class E airspace extending upward from 700 feet above the surface for a new COPTER RNAV (POINT-IN-SPACE) SIAP at Clarian Arnett Heliport, Lafayette, IN. Controlled airspace is needed for the safety and management of IFR operations at the heliport.

Class E airspace areas are published in Paragraph 6005 of FAA Order 7400.9U, dated August 18, 2010, and effective September 15, 2010, which is incorporated by reference in 14 CFR 71.1. The Class E airspace designation listed in this document would be published subsequently in the Order.

The FAA has determined that this proposed regulation only involves an established body of technical regulations for which frequent and routine amendments are necessary to keep them operationally current. It, therefore, (1) Is not a "significant regulatory action" under Executive Order 12866; (2) is not a "significant rule" under DOT Regulatory Policies and Procedures (44 FR 11034; February 26, 1979); and (3) does not warrant preparation of a Regulatory Evaluation as the anticipated impact is so minimal. Since this is a routine matter that will only affect air traffic procedures and air navigation, it is certified that this rule, when promulgated, will not have a significant economic impact on a substantial number of small entities under the criteria of the Regulatory Flexibility Act.

The FAA's authority to issue rules regarding aviation safety is found in Title 49 of the U.S. Code. Subtitle 1, section 106 describes the authority of the FAA Administrator. Subtitle VII, Aviation Programs, describes in more detail the scope of the agency's authority. This rulemaking is promulgated under the authority described in subtitle VII, part A, subpart I, section 40103. Under that section, the FAA is charged with prescribing regulations to assign the use of airspace necessary to ensure the safety of aircraft and the efficient use of airspace. This regulation is within the scope of that authority as it would add controlled airspace at Clarian Arnett Heliport, Lafayette, IN.

List of Subjects in 14 CFR Part 71

Airspace, Incorporation by reference, Navigation (Air).

The Proposed Amendment

In consideration of the foregoing, the Federal Aviation Administration proposes to amend 14 CFR part 71 as follows:

PART 71—DESIGNATION OF CLASS A, B, C, D, AND E AIRSPACE AREAS; AIR TRAFFIC SERVICE ROUTES; AND REPORTING POINTS

1. The authority citation for part 71 continues to read as follows:

Authority: 49 U.S.C. 106(g); 40103, 40113, 40120; E.O. 10854, 24 FR 9565, 3 CFR, 1959–1963 Comp., p. 389.

§ 71.1 [Amended]

2. The incorporation by reference in 14 CFR 71.1 of FAA Order 7400.9U, Airspace Designations and Reporting Points, dated August 18, 2010, and effective September 15, 2010, is amended as follows:

Paragraph 6005 Class E airspace areas extending upward from 700 feet or more above the surface of the earth.

* * * * *

AGL IN E5 Lafayette, Purdue University Airport, IN [Amended]

Lafayette, Purdue University Airport, IN
(Lat. 40°24′44″ N., long. 86°56′13″ W.)
Lafayette, Clarian Arnett Heliport, IN Point in Space
(Lat. 40°23′30″ N., long. 86°48′58″ W.)
Boiler VORTAC
(Lat. 40°33′22″ N., long. 87°04′10″ W.)

That airspace extending upward from 700 feet above the surface within a 6.7-mile radius of Purdue University Airport, and within 1.7 miles each side of the 144° radial of the Boiler VORTAC extending from the 6.7-mile radius to the VORTAC, and within a 6-mile radius of the Clarian Arnett Heliport point in space at lat. 40°23′30″ N., long. 86°48′58″ W.

Issued in Fort Worth, TX, on October 26, 2010.

Anthony D. Roetzel,

Manager, Operations Support Group, ATO Central Service Center.

[FR Doc. 2010–28098 Filed 11–5–10; 8:45 am]

BILLING CODE 4910–13–P

DEPARTMENT OF TRANSPORTATION

Federal Aviation Administration

14 CFR Part 71

[Docket No. FAA–2010–1033; Airspace Docket No. 10–AGL–21]

Proposed Amendment of Class E Airspace; Richmond, IN

AGENCY: Federal Aviation Administration (FAA), DOT.

ACTION: Notice of proposed rulemaking (NPRM).

SUMMARY: This action proposes to amend Class E airspace at Richmond, IN, to accommodate new Standard Instrument Approach Procedures (SIAP) for the Reid Hospital Heliport. The FAA is taking this action to enhance the safety and management of Instrument Flight Rules (IFR) operations.

DATES: 0901 UTC. Comments must be received on or before December 23, 2010.

ADDRESSES: Send comments on this proposal to the U.S. Department of Transportation, Docket Operations, 1200 New Jersey Avenue, SE., West Building Ground Floor, Room W12–140, Washington, DC 20590–0001. You must identify the docket number FAA–2010–1033/Airspace Docket No. 10–AGL–21, at the beginning of your comments. You may also submit comments through the Internet at *http://www.regulations.gov.* You may review the public docket containing the proposal, any comments received, and any final disposition in person in the Dockets Office between 9 a.m. and 5 p.m., Monday through Friday, except Federal holidays. The Docket Office (telephone 1–800–647–5527), is on the ground floor of the building at the above address.

FOR FURTHER INFORMATION CONTACT: Scott Enander, Central Service Center, Operations Support Group, Federal Aviation Administration, Southwest Region, 2601 Meacham Blvd, Fort Worth, TX 76137; telephone: 817–321–7716.

SUPPLEMENTARY INFORMATION:

Comments Invited

Interested parties are invited to participate in this proposed rulemaking by submitting such written data, views, or arguments, as they may desire. Comments that provide the factual basis supporting the views and suggestions presented are particularly helpful in developing reasoned regulatory decisions on the proposal. Comments are specifically invited on the overall regulatory, aeronautical, economic, environmental, and energy-related aspects of the proposal. Communications should identify both docket numbers and be submitted in triplicate to the address listed above. Commenters wishing the FAA to acknowledge receipt of their comments on this notice must submit with those comments a self-addressed, stamped postcard on which the following statement is made: "Comments to Docket No. FAA–2010–1033/Airspace Docket No. 10–AGL–21." The postcard will be date/time stamped and returned to the commenter.

Availability of NPRMs

An electronic copy of this document may be downloaded through the Internet at *http://www.regulations.gov.* Recently published rulemaking documents can also be accessed through the FAA's Web page at *http://www.faa.gov/airports_airtraffic/air_traffic/publications/airspace_amendments/.*

You may review the public docket containing the proposal, any comments received and any final disposition in person in the Dockets Office (*see* **ADDRESSES** section for address and phone number) between 9 a.m. and 5 p.m., Monday through Friday, except Federal holidays. An informal docket may also be examined during normal business hours at the office of the Central Service Center, 2601 Meacham Blvd., Fort Worth, TX 76137.

Persons interested in being placed on a mailing list for future NPRMs should contact the FAA's Office of Rulemaking 202–267–9677, to request a copy of Advisory Circular No. 11–2A, Notice of Proposed Rulemaking Distribution System, which describes the application procedure.

The Proposal

This action proposes to amend Title 14, Code of Federal Regulations (14 CFR), part 71 by adding additional Class E airspace extending upward from 700 feet above the surface for a new COPTER RNAV (POINT-IN-SPACE) SIAP for the Reid Hospital Heliport, Richmond, IN. Controlled airspace is needed for the safety and management of IFR operations in the Richmond, IN, area.

Class E airspace areas are published in Paragraph 6005 of FAA Order 7400.9U, dated August 18, 2010, and effective September 15, 2010, which is incorporated by reference in 14 CFR 71.1. The Class E airspace designation listed in this document would be published subsequently in the Order.

The FAA has determined that this proposed regulation only involves an established body of technical regulations for which frequent and routine amendments are necessary to keep them operationally current. It, therefore, (1) Is not a "significant regulatory action" under Executive Order 12866; (2) is not a "significant rule" under DOT Regulatory Policies and Procedures (44 FR 11034; February 26, 1979); and (3) does not warrant preparation of a Regulatory Evaluation as the anticipated impact is so minimal. Since this is a routine matter that will only affect air traffic procedures and air navigation, it is certified that this rule, when promulgated, will not have a significant economic impact on a substantial number of small entities under the criteria of the Regulatory Flexibility Act.

The FAA's authority to issue rules regarding aviation safety is found in Title 49 of the U.S. Code. Subtitle 1, section 106 describes the authority of the FAA Administrator. Subtitle VII, Aviation Programs, describes in more detail the scope of the agency's authority. This rulemaking is promulgated under the authority described in subtitle VII, part A, subpart I, section 40103. Under that section, the FAA is charged with prescribing regulations to assign the use of airspace necessary to ensure the safety of aircraft and the efficient use of airspace. This regulation is within the scope of that authority as it would add controlled

airspace at Reid Hospital Heliport, Richmond, IN.

List of Subjects in 14 CFR Part 71

Airspace, Incorporation by reference, Navigation (Air).

The Proposed Amendment

In consideration of the foregoing, the Federal Aviation Administration proposes to amend 14 CFR part 71 as follows:

PART 71—DESIGNATION OF CLASS A, B, C, D, AND E AIRSPACE AREAS; AIR TRAFFIC SERVICE ROUTES; AND REPORTING POINTS

1. The authority citation for part 71 continues to read as follows:

Authority: 49 U.S.C. 106(g); 40103, 40113, 40120; E.O. 10854, 24 FR 9565, 3 CFR, 1959–1963 Comp., p. 389.

§ 71.1 [Amended]

2. The incorporation by reference in 14 CFR 71.1 of FAA Order 7400.9U, Airspace Designations and Reporting Points, dated August 18, 2010, and effective September 15, 2010, is amended as follows:

Paragraph 6005 Class E airspace areas extending upward from 700 feet or more above the surface of the earth.

* * * * *

AGL IN E5 Richmond, IN [Amended]

Richmond Municipal Airport, IN
(Lat. 39°45′26″ N., long. 84°50′34″ W.)
Reid Hospital Heliport, IN
Point in Space
(Lat. 39°52′25″ N., long. 84°53′24″ W.)

That airspace extending upward from 700 feet above the surface within a 7-mile radius of Richmond Municipal Airport, and within a 6-mile radius of the Reid Hospital Heliport point in space at lat. 39°52′25″ N., long. 84°53′24″ W.

Issued in Fort Worth, TX, on October 26, 2010.

Anthony D. Roetzel,

Manager, Operations Support Group, ATO Central Service Center.

[FR Doc. 2010–28099 Filed 11–5–10; 8:45 am]

BILLING CODE 4901–13–P

DEPARTMENT OF TRANSPORTATION

Federal Aviation Administration

14 CFR Part 71

[Docket No. FAA–2010–1030; Airspace Docket No. 10–AGL–18]

Proposed Amendment of Class E Airspace; La Porte, IN

AGENCY: Federal Aviation Administration (FAA), DOT.

ACTION: Notice of proposed rulemaking (NPRM).

SUMMARY: This action proposes to amend Class E airspace at La Porte, IN, to accommodate new Standard Instrument Approach Procedures (SIAP) for the La Porte Hospital Heliport. The FAA is taking this action to enhance the safety and management of Instrument Flight Rules (IFR) operations at the heliport.

DATES: 0901 UTC. Comments must be received on or before December 23, 2010.

ADDRESSES: Send comments on this proposal to the U.S. Department of Transportation, Docket Operations, 1200 New Jersey Avenue SE., West Building Ground Floor, Room W12–140, Washington, DC 20590–0001. You must identify the docket number FAA–2010–1030/Airspace Docket No. 10–AGL–18, at the beginning of your comments. You may also submit comments through the Internet at *http://www.regulations.gov.* You may review the public docket containing the proposal, any comments received, and any final disposition in person in the Dockets Office between 9 a.m. and 5 p.m., Monday through Friday, except Federal holidays. The Docket Office (telephone 1–800–647–5527), is on the ground floor of the building at the above address.

FOR FURTHER INFORMATION CONTACT: Scott Enander, Central Service Center, Operations Support Group, Federal Aviation Administration, Southwest Region, 2601 Meacham Blvd., Fort Worth, TX 76137; telephone: 817–321–7716.

SUPPLEMENTARY INFORMATION:

Comments Invited

Interested parties are invited to participate in this proposed rulemaking by submitting such written data, views, or arguments, as they may desire. Comments that provide the factual basis supporting the views and suggestions presented are particularly helpful in developing reasoned regulatory decisions on the proposal. Comments are specifically invited on the overall regulatory, aeronautical, economic, environmental, and energy-related aspects of the proposal. Communications should identify both docket numbers and be submitted in triplicate to the address listed above. Commenters wishing the FAA to acknowledge receipt of their comments on this notice must submit with those comments a self-addressed, stamped postcard on which the following statement is made: "Comments to Docket No. FAA–2010–1030/Airspace Docket No. 10–AGL–18." The postcard will be date/time stamped and returned to the commenter.

Availability of NPRMs

An electronic copy of this document may be downloaded through the Internet at *http://www.regulations.gov.* Recently published rulemaking documents can also be accessed through the FAA's Web page at *http://www.faa.gov/airports_airtraffic/air_traffic/publications/airspace_amendments/.*

You may review the public docket containing the proposal, any comments received and any final disposition in person in the Dockets Office (see **ADDRESSES** section for address and phone number) between 9 a.m. and 5 p.m., Monday through Friday, except Federal holidays. An informal docket may also be examined during normal business hours at the office of the Central Service Center, 2601 Meacham Blvd., Fort Worth, TX 76137.

Persons interested in being placed on a mailing list for future NPRMs should contact the FAA's Office of Rulemaking 202–267–9677, to request a copy of Advisory Circular No. 11–2A, Notice of Proposed Rulemaking Distribution System, which describes the application procedure.

The Proposal

This action proposes to amend Title 14, Code of Federal Regulations (14 CFR), part 71 by adding Class E airspace extending upward from 700 feet above the surface for a new COPTER RNAV (POINT-IN-SPACE) SIAP for the La Porte Hospital Heliport, La Porte, IN. Controlled airspace is needed for the safety and management of IFR operations at the heliport.

Class E airspace areas are published in Paragraph 6005 of FAA Order 7400.9U, dated August 18, 2010, and effective September 15, 2010, which is incorporated by reference in 14 CFR 71.1. The Class E airspace designation listed in this document would be published subsequently in the Order.

The FAA has determined that this proposed regulation only involves an established body of technical regulations for which frequent and routine amendments are necessary to keep them operationally current. It, therefore, (1) Is not a "significant regulatory action" under Executive Order 12866; (2) is not a "significant rule" under DOT Regulatory Policies and Procedures (44 FR 11034; February 26, 1979); and (3) does not warrant preparation of a Regulatory Evaluation as the anticipated impact is so minimal. Since this is a routine matter that will

only affect air traffic procedures and air navigation, it is certified that this rule, when promulgated, will not have a significant economic impact on a substantial number of small entities under the criteria of the Regulatory Flexibility Act.

The FAA's authority to issue rules regarding aviation safety is found in Title 49 of the U.S. Code. Subtitle 1, section 106 describes the authority of the FAA Administrator. Subtitle VII, Aviation Programs, describes in more detail the scope of the agency's authority. This rulemaking is promulgated under the authority described in subtitle VII, part A, subpart I, section 40103. Under that section, the FAA is charged with prescribing regulations to assign the use of airspace necessary to ensure the safety of aircraft and the efficient use of airspace. This regulation is within the scope of that authority as it would add controlled airspace for the La Porte Hospital Heliport, La Porte, IN.

List of Subjects in 14 CFR Part 71

Airspace, Incorporation by reference, Navigation (Air).

The Proposed Amendment

In consideration of the foregoing, the Federal Aviation Administration proposes to amend 14 CFR part 71 as follows:

PART 71—DESIGNATION OF CLASS A, B, C, D, AND E AIRSPACE AREAS; AIR TRAFFIC SERVICE ROUTES; AND REPORTING POINTS

1. The authority citation for part 71 continues to read as follows:

Authority: 49 U.S.C. 106(g); 40103, 40113, 40120; E.O. 10854, 24 FR 9565, 3 CFR, 1959–1963 Comp., p. 389.

§ 71.1 [Amended]

2. The incorporation by reference in 14 CFR 71.1 of FAA Order 7400.9U, Airspace Designations and Reporting Points, dated August 18, 2010, and effective September 15, 2010, is amended as follows:

Paragraph 6005 Class E airspace areas extending upward from 700 feet or more above the surface of the earth.

* * * * *

AGL IN E5 La Porte, IN [Amended]

La Porte Municipal Airport, IN
(Lat. 41°34′21″ N., long. 86°44′04″ W.)
La Porte Hospital Heliport, IN
Point in Space
(Lat. 41°36′11″ N., long. 86°44′10″ W.)
La Porte NDB
(Lat. 41°29′56″ N., long. 86°46′17″ W.)

That airspace extending upward from 700 feet above the surface within a 7.3-mile radius of La Porte Municipal Airport, and within 2.5 miles each side of the 201° bearing from the La Porte NDB extending from the 7.3-mile radius to 11.4 miles south of the airport, and within a 6-mile radius of the La Porte Hospital Heliport Point in Space at lat. 41°29′56″ N., long. 86°46′17″ W.

Issued in Fort Worth, TX, on October 26, 2010.

Anthony D. Roetzel,

Manager, Operations Support Group, ATO Central Service Center.

[FR Doc. 2010–28102 Filed 11–5–10; 8:45 am]

BILLING CODE 4910–13–P

DEPARTMENT OF TRANSPORTATION

Federal Aviation Administration

14 CFR Part 71

[Docket No. FAA–2010–1031; Airspace Docket No. 10–AGL–19]

Proposed Establishment of Class E Airspace; Martinsville, IN

AGENCY: Federal Aviation Administration (FAA), DOT.

ACTION: Notice of proposed rulemaking (NPRM).

SUMMARY: This action proposes to establish Class E airspace at Martinsville, IN, to accommodate new Standard Instrument Approach Procedures (SIAP) for the Morgan Hospital Heliport. The FAA is taking this action to enhance the safety and management of Instrument Flight Rules (IFR) operations at the heliport.

DATES: 0901 UTC. Comments must be received on or before December 23, 2010.

ADDRESSES: Send comments on this proposal to the U.S. Department of Transportation, Docket Operations, 1200 New Jersey Avenue, SE., West Building Ground Floor, Room W12–140, Washington, DC 20590–0001. You must identify the docket number FAA–2010–1031/Airspace Docket No. 10–AGL–19, at the beginning of your comments. You may also submit comments through the Internet at *http://www.regulations.gov.* You may review the public docket containing the proposal, any comments received, and any final disposition in person in the Dockets Office between 9 a.m. and 5 p.m., Monday through Friday, except Federal holidays. The Docket Office (telephone 1–800–647–5527), is on the ground floor of the building at the above address.

FOR FURTHER INFORMATION CONTACT: Scott Enander, Central Service Center, Operations Support Group, Federal Aviation Administration, Southwest Region, 2601 Meacham Blvd., Fort Worth, TX 76137; *telephone:* 817–321–7716.

SUPPLEMENTARY INFORMATION:

Comments Invited

Interested parties are invited to participate in this proposed rulemaking by submitting such written data, views, or arguments, as they may desire. Comments that provide the factual basis supporting the views and suggestions presented are particularly helpful in developing reasoned regulatory decisions on the proposal. Comments are specifically invited on the overall regulatory, aeronautical, economic, environmental, and energy-related aspects of the proposal. Communications should identify both docket numbers and be submitted in triplicate to the address listed above. Commenters wishing the FAA to acknowledge receipt of their comments on this notice must submit with those comments a self-addressed, stamped postcard on which the following statement is made: "Comments to Docket No. FAA–2010–1031/Airspace Docket No. 10–AGL–19." The postcard will be date/time stamped and returned to the commenter.

Availability of NPRMs

An electronic copy of this document may be downloaded through the Internet at *http://www.regulations.gov.* Recently published rulemaking documents can also be accessed through the FAA's web page at *http://www.faa.gov/airports_airtraffic/air_traffic/publications/airspace_amendments/.*

You may review the public docket containing the proposal, any comments received and any final disposition in person in the Dockets Office (*see* **ADDRESSES** section for address and phone number) between 9 a.m. and 5 p.m., Monday through Friday, except Federal holidays. An informal docket may also be examined during normal business hours at the office of the Central Service Center, 2601 Meacham Blvd., Fort Worth, TX 76137.

Persons interested in being placed on a mailing list for future NPRMs should contact the FAA's Office of Rulemaking 202–267–9677, to request a copy of Advisory Circular No. 11–2A, Notice of Proposed Rulemaking Distribution System, which describes the application procedure.

The Proposal

This action proposes to amend Title 14, Code of Federal Regulations (14 CFR), part 71 by establishing Class E airspace extending upward from 700 feet above the surface for a new

COPTER RNAV (POINT-IN-SPACE) SIAP for the Morgan Hospital Heliport, Martinsville, IN. Controlled airspace is needed for the safety and management of IFR operations at the heliport.

Class E airspace areas are published in Paragraph 6005 of FAA Order 7400.9U, dated August 18, 2010, and effective September 15, 2010, which is incorporated by reference in 14 CFR 71.1. The Class E airspace designation listed in this document would be published subsequently in the Order.

The FAA has determined that this proposed regulation only involves an established body of technical regulations for which frequent and routine amendments are necessary to keep them operationally current. It, therefore, (1) Is not a "significant regulatory action" under Executive Order 12866; (2) is not a "significant rule" under DOT Regulatory Policies and Procedures (44 FR 11034; February 26, 1979); and (3) does not warrant preparation of a Regulatory Evaluation as the anticipated impact is so minimal. Since this is a routine matter that will only affect air traffic procedures and air navigation, it is certified that this rule, when promulgated, will not have a significant economic impact on a substantial number of small entities under the criteria of the Regulatory Flexibility Act.

The FAA's authority to issue rules regarding aviation safety is found in Title 49 of the U.S. Code. Subtitle 1, section 106 describes the authority of the FAA Administrator. Subtitle VII, Aviation Programs, describes in more detail the scope of the agency's authority. This rulemaking is promulgated under the authority described in subtitle VII, part A, subpart I, section 40103. Under that section, the FAA is charged with prescribing regulations to assign the use of airspace necessary to ensure the safety of aircraft and the efficient use of airspace. This regulation is within the scope of that authority as it would establish controlled airspace for the Morgan Hospital Heliport, Martinsville, IN.

List of Subjects in 14 CFR Part 71

Airspace, Incorporation by reference, Navigation (Air).

The Proposed Amendment

In consideration of the foregoing, the Federal Aviation Administration proposes to amend 14 CFR part 71 as follows:

PART 71—DESIGNATION OF CLASS A, B, C, D, AND E AIRSPACE AREAS; AIR TRAFFIC SERVICE ROUTES; AND REPORTING POINTS

1. The authority citation for part 71 continues to read as follows:

Authority: 49 U.S.C. 106(g); 40103, 40113, 40120; E.O. 10854, 24 FR 9565, 3 CFR, 1959–1963 Comp., p. 389.

§ 71.1 [Amended]

2. The incorporation by reference in 14 CFR 71.1 of FAA Order 7400.9U, Airspace Designations and Reporting Points, dated August 18, 2010, and effective September 15, 2010, is amended as follows:

Paragraph 6005 Class E airspace areas extending upward from 700 feet or more above the surface of the earth.

* * * * *

AGL IN E5 Martinsville, IN [New]

Martinsville, Morgan Hospital Heliport, IN
Point in Space
(Lat. 39°25′00″ N., long. 86°24′49″ W.)

That airspace extending upward from 700 feet above the surface within a 6-mile radius of the Morgan Hospital Heliport point in space at lat. 39°25′00″ N., long. 86°24′49″ W.

Issued in Fort Worth, TX, on October 26, 2010.

Anthony D. Roetzel,

Manager, Operations Support Group, ATO Central Service Center.

[FR Doc. 2010–28097 Filed 11–5–10; 8:45 am]

BILLING CODE 4910–13–P

DEPARTMENT OF TRANSPORTATION

Federal Aviation Administration

14 CFR Part 71

[Docket No. FAA–2010–1035; Airspace Docket No. 10–ACE–12]

Proposed Establishment of Class E Airspace; New Hampton, IA

AGENCY: Federal Aviation Administration (FAA), DOT.

ACTION: Notice of proposed rulemaking (NPRM).

SUMMARY: This action proposes to establish Class E airspace at New Hampton, IA, to accommodate new Standard Instrument Approach Procedures (SIAP) for the Mercy Medical Center Heliport. The FAA is taking this action to enhance the safety and management of Instrument Flight Rules (IFR) operations.

DATES: 0901 UTC. Comments must be received on or before December 23, 2010.

ADDRESSES: Send comments on this proposal to the U.S. Department of Transportation, Docket Operations, 1200 New Jersey Avenue, SE., West Building Ground Floor, Room W12–140, Washington, DC 20590–0001. You must identify the docket number FAA–2010–1035/Airspace Docket No. 10–ACE–12, at the beginning of your comments. You may also submit comments through the Internet at *http://www.regulations.gov.* You may review the public docket containing the proposal, any comments received, and any final disposition in person in the Dockets Office between 9 a.m. and 5 p.m., Monday through Friday, except Federal holidays. The Docket Office (telephone 1–800–647–5527), is on the ground floor of the building at the above address.

FOR FURTHER INFORMATION CONTACT: Scott Enander, Central Service Center, Operations Support Group, Federal Aviation Administration, Southwest Region, 2601 Meacham Blvd., Fort Worth, TX 76137; telephone: 817–321–7716.

SUPPLEMENTARY INFORMATION:

Comments Invited

Interested parties are invited to participate in this proposed rulemaking by submitting such written data, views, or arguments, as they may desire. Comments that provide the factual basis supporting the views and suggestions presented are particularly helpful in developing reasoned regulatory decisions on the proposal. Comments are specifically invited on the overall regulatory, aeronautical, economic, environmental, and energy-related aspects of the proposal. Communications should identify both docket numbers and be submitted in triplicate to the address listed above. Commenters wishing the FAA to acknowledge receipt of their comments on this notice must submit with those comments a self-addressed, stamped postcard on which the following statement is made: "Comments to Docket No. FAA–2010–1035/Airspace Docket No. 10–ACE–12." The postcard will be date/time stamped and returned to the commenter.

Availability of NPRMs

An electronic copy of this document may be downloaded through the Internet at *http://www.regulations.gov.* Recently published rulemaking documents can also be accessed through the FAA's web page at *http://www.faa.gov/airports_airtraffic/air_traffic/publications/airspace_amendments/.*

You may review the public docket containing the proposal, any comments

received and any final disposition in person in the Dockets Office (see **ADDRESSES** section for address and phone number) between 9 a.m. and 5 p.m., Monday through Friday, except Federal holidays. An informal docket may also be examined during normal business hours at the office of the Central Service Center, 2601 Meacham Blvd, Fort Worth, TX 76137.

Persons interested in being placed on a mailing list for future NPRMs should contact the FAA's Office of Rulemaking 202–267–9677, to request a copy of Advisory Circular No. 11–2A, Notice of Proposed Rulemaking Distribution System, which describes the application procedure.

The Proposal

This action proposes to amend Title 14, Code of Federal Regulations (14 CFR), part 71 by establishing Class E airspace extending upward from 700 feet above the surface for a new COPTER RNAV (POINT-IN-SPACE) SIAP at Mercy Medical Center Heliport, New Hampton, IA. Controlled airspace is needed for the safety and management of IFR operations.

Class E airspace areas are published in Paragraph 6005 of FAA Order 7400.9U, dated August 18, 2010, and effective September 15, 2010, which is incorporated by reference in 14 CFR 71.1. The Class E airspace designation listed in this document would be published subsequently in the Order.

The FAA has determined that this proposed regulation only involves an established body of technical regulations for which frequent and routine amendments are necessary to keep them operationally current. It, therefore, (1) Is not a "significant regulatory action" under Executive Order 12866; (2) is not a "significant rule" under DOT Regulatory Policies and Procedures (44 FR 11034; February 26, 1979); and (3) does not warrant preparation of a Regulatory Evaluation as the anticipated impact is so minimal. Since this is a routine matter that will only affect air traffic procedures and air navigation, it is certified that this rule, when promulgated, will not have a significant economic impact on a substantial number of small entities under the criteria of the Regulatory Flexibility Act.

The FAA's authority to issue rules regarding aviation safety is found in Title 49 of the U.S. Code. Subtitle 1, section 106 describes the authority of the FAA Administrator. Subtitle VII, Aviation Programs, describes in more detail the scope of the agency's authority. This rulemaking is promulgated under the authority described in subtitle VII, part A, subpart I, section 40103. Under that section, the FAA is charged with prescribing regulations to assign the use of airspace necessary to ensure the safety of aircraft and the efficient use of airspace. This regulation is within the scope of that authority as it would establish controlled airspace at Mercy Medical Center Heliport, New Hampton, IA.

List of Subjects in 14 CFR Part 71

Airspace, Incorporation by reference, Navigation (Air).

The Proposed Amendment

In consideration of the foregoing, the Federal Aviation Administration proposes to amend 14 CFR part 71 as follows:

PART 71—DESIGNATION OF CLASS A, B, C, D, AND E AIRSPACE AREAS; AIR TRAFFIC SERVICE ROUTES; AND REPORTING POINTS

1. The authority citation for part 71 continues to read as follows:

Authority: 49 U.S.C. 106(g); 40103, 40113, 40120; E.O. 10854, 24 FR 9565, 3 CFR, 1959–1963 Comp., p. 389.

§ 71.1 [Amended]

2. The incorporation by reference in 14 CFR 71.1 of FAA Order 7400.9U, Airspace Designations and Reporting Points, dated August 18, 2010, and effective September 15, 2010, is amended as follows:

Paragraph 6005 Class E airspace areas extending upward from 700 feet or more above the surface of the earth.

* * * * *

ACE IA E5 New Hampton, IA [New]

New Hampton, Mercy Medical Center Heliport, IA
Point In Space
(Lat. 43°03′11″ N., long. 92°19′38″ W.)

That airspace extending upward from 700 feet above the surface within a 6-mile radius of the Mercy Medical Center Heliport point in space at lat. 43°03′11″ N., long. 92°19′38″ W.

Issued in Fort Worth, TX, on October 26, 2010.

Anthony D. Roetzel,

Manager, Operations Support Group, ATO Central Service Center.

[FR Doc. 2010–28096 Filed 11–5–10; 8:45 am]

BILLING CODE 4910–13–P

FEDERAL TRADE COMMISSION

16 CFR Part 437

Disclosure Requirements and Prohibitions Concerning Business Opportunities

AGENCY: Federal Trade Commission.

ACTION: Staff Report.

SUMMARY: The Federal Trade Commission ("FTC" or "Commission") announces the publication of the Staff Report on the Business Opportunity Rule. The Staff Report sets forth the staff's recommendations to the Commission on the various proposed amendments to the Business Opportunity Rule.

DATES: Comments on the Staff Report must be submitted on or before January 18, 2011.

ADDRESSES: Interested persons are invited to submit written comments electronically or in paper form by following the instructions in the **SUPPLEMENTARY INFORMATION** section below. Comments filed in electronic form should be submitted at: *https://ftcpublic.commentworks.com/ftc/busopprulestaffreport* (and following the instructions on the web-based form). Comments filed in paper form should be mailed or delivered to the following address: Federal Trade Commission/Office of the Secretary, Room 113–H, Annex S, 600 Pennsylvania Ave., NW., Washington, DC 20580, in the manner detailed in the **SUPPLEMENTARY INFORMATION** section below.

FOR FURTHER INFORMATION CONTACT: Kathleen Benway (202) 326–2024, Division of Marketing Practices, Bureau of Consumer Protection, Federal Trade Commission, 600 Pennsylvania Avenue, NW., Room H–286, Washington, DC 20580.

SUPPLEMENTARY INFORMATION: The Business Opportunity Rule, 16 CFR part 437, requires the pre-sale disclosure of information to prospective purchasers about the business opportunity and the seller.[1] The Business Opportunity Rule, modeled on the original Franchise Rule, mandates that business opportunity sellers make 22 separate categories of disclosures to potential buyers. The Commission has concluded that these extensive disclosure requirements impose unnecessary compliance costs on both business opportunity sellers and buyers.

The Commission's experience in conducting numerous law enforcement sweeps of the business opportunity industry, however, demonstrates that

[1] 16 CFR 437 *et seq.*

fraud in the sale of business opportunities is not only prevalent but persistent. Accordingly, the Commission has engaged in an ongoing effort to amend the Business Opportunity Rule to adequately protect consumers from potentially fraudulent business opportunity sellers, while at the same time minimizing compliance costs. The Commission began by publishing an initial Notice of Proposed Rulemaking in 2006.[2] It published a revised Notice of Proposed Rulemaking in 2008 ("RNPR"),[3] and held a public workshop on June 1, 2009 to discuss proposed amended disclosure requirements.[4]

Pursuant to the Commission's Rules of Practice, and the rulemaking procedures specified earlier in the RNPR, the Commission now announces the availability of the Staff Report on the Business Opportunity Rule. The Staff Report summarizes the rulemaking record to date, analyzes the various alternatives suggested, and sets forth the staff's recommendation to the Commission on the proposed revised Rule. The Staff Report has not been endorsed or adopted by the Commission.

The Staff Report is available at the FTC's Web site at *http://www.ftc.gov.* It is also available from the Commission's Public Reference Room, Room H–130, Federal Trade Commission, 600 Pennsylvania Avenue, NW., Washington, DC 20580.

The Commission invites interested parties to submit written data, views, and arguments on the recommendations announced by the Staff Report by following the instructions in the **ADDRESSES** section of this notice. Comments, however, are to be limited to those matters not already part of the rulemaking record. Further, comments previously submitted in the ongoing rulemaking procedures are already part of the rulemaking record and need not be repeated. Written communications and summaries or transcripts of any oral communications respecting the merits of this proceeding from any outside party to any Commissioner or Commissioner's advisor will also be placed on the public record. *See* 16 CFR 1.26(b)(5).

Please note that comments will be placed on the public record—including on the publicly accessible FTC Web site, at *http://www.ftc.gov/os/publiccomments.shtm*—and therefore should not include any sensitive or confidential information. In particular, comments should not include any sensitive personal information, such as an individual's Social Security Number; date of birth; driver's license number or other state identification number, or foreign country equivalent; passport number; financial account number; or credit or debit card number. Comments also should not include any sensitive health information, such as medical records or other individually identifiable health information. In addition, comments should not include any "[t]rade secrets and commercial or financial information obtained from a person and privileged or confidential" as provided in Section 6(f) of the FTC Act, 15 U.S.C. 46(f), and Commission Rule 4.10(a)(2), 16 CFR 4.10(a)(2). Comments containing material for which confidential treatment is requested must be filed in paper (rather than electronic) form, must be clearly labeled "Confidential," and must comply with FTC Rule 4.9(c).[5]

The FTC is requesting that any comment filed in paper form be sent by courier or overnight service, if possible, because U.S. postal mail in the Washington area, and at the Commission, is subject to delay due to heightened security precautions.

Because U.S. postal mail is subject to delay due to heightened security measures, please consider submitting your comments in electronic form. To ensure that the Commission considers an electronic comment, you must file it on the web-based form at the weblink *https://ftcpublic.commentworks.com/ftc/busopprulestaffreport.* If this Notice appears at *http://www.regulations.gov/search/index.isp,* you also may file an electronic comment though that Web site. The Commission will consider all comments that *regulations.gov* forwards to it.

The FTC Act and other laws the Commission administers permit the collection of public comments to consider and use in this proceeding as appropriate. The Commission will consider all timely and responsive public comments that it receives, whether filed in electronic or paper form. Comments received will be available to the public on the FTC Web site, to the extent practicable, at *http://www.ftc.gov.* As a matter of discretion, the FTC makes every effort to remove home contact information for individuals from the public comments it receives before placing those comments on the FTC Web site. More information, including routine uses permitted by the Privacy Act, may be found at the FTC's privacy policy, at *http://www.ftc.gov/ftc/privacy.htm.*

Upon completion of the comment period, the staff will make final recommendations to the Commission about the Rule. Assuming the Commission adopts the proposed revised Rule as recommended by the staff, or after the conclusion of the comment period determines to make changes to the proposed revised Rule, it will publish in a future Federal Register notice the final text of the Rule, a statement of Basis and Purpose on the Rule, and an announcement of when the revised Rule will become effective.

By direction of the Commission.

Richard C. Donohue,

Acting Secretary.

[FR Doc. 2010–28044 Filed 11–5–10; 8:45 am]

BILLING CODE 6750–01–P

[2] 71 FR 19,056 (Apr. 12, 2006).

[3] 73 FR 16,110 (Mar. 28, 2008).

[4] 74 FR 18,712 (Apr. 24, 2009).

[5] FTC Rule 4.2(d), 16 CFR 4.2(d). The comment must be accompanied by an explicit request for confidential treatment, including the factual and legal basis for the request, and must identify the specific portions of the comment to be withheld from the public record. The request will be granted or denied by the Commission's General Counsel, consistent with applicable law and the public interest. *See* FTC Rule 4.9(c), 16 CFR 4.9(c).

SECURITIES AND EXCHANGE COMMISSION

17 CFR Part 240

[Release No. 34–63236; File No. S7–32–10]

RIN 3235–AK77

Prohibition Against Fraud, Manipulation, and Deception in Connection With Security-Based Swaps

AGENCY: Securities and Exchange Commission.

ACTION: Proposed rule.

SUMMARY: The Securities and Exchange Commission ("Commission") is proposing for comment a new rule under the Securities Exchange Act of 1934 ("Exchange Act") that is intended to prevent fraud, manipulation, and deception in connection with the offer, purchase or sale of any security-based swap, the exercise of any right or performance of any obligation under a security-based swap, or the avoidance of such exercise or performance.

DATES: Comments should be received on or before December 23, 2010.

ADDRESSES: Comments may be submitted by any of the following methods:

Electronic Comments

- Use the Commission's Internet comment form (*http://www.sec.gov/rules/proposed.shtml*); or

• Send an e-mail to *rule-comments@sec.gov*. Please include File Number S7–32–10 on the subject line; or

• Use the Federal eRulemaking Portal (*http://www.regulations.gov*). Follow the instructions for submitting comments.

Paper Comments

• Send paper comments in triplicate to Elizabeth M. Murphy, Securities and Exchange Commission, 100 F Street, NE., Washington, DC 20549.

All submissions should refer to File Number S7–32–10. This file number should be included on the subject line if e-mail is used. To help us process and review your comments more efficiently, please use only one method. The Commission will post all comments on the Commission's Internet Web site (*http://www.sec.gov/rules/proposed.shtml*). Comments are also available for Web site viewing and printing in the Commission's Public Reference Room, 100 F Street, NE., Washington, DC 20549. All comments received will be posted without change; we do not edit personal identifying information from submissions. You should submit only information that you wish to make available publicly.

FOR FURTHER INFORMATION CONTACT: Josephine Tao, Assistant Director, Elizabeth Sandoe, Senior Special Counsel, or Joan Collopy, Special Counsel, Office of Trading Practices and Processing, Division of Trading and Markets, at (202) 551–5720, at the Securities and Exchange Commission, 100 F Street, NE., Washington, DC 20549.

SUPPLEMENTARY INFORMATION: The Commission is requesting public comment on proposed Rule 9j–1 under the Exchange Act.

I. Introduction

The Commission is proposing Exchange Act Rule 9j–1, which is intended to prohibit fraud, manipulation, and deception in connection with the offer, purchase or sale of any security-based swap, as well as in connection with the exercise of any right or performance of any obligation under a security-based swap, including the avoidance of such exercise or performance. Section 761(a) of the Dodd-Frank Wall Street Reform and Consumer Protection Act (the "Dodd-Frank Act") [1] adds new Section 3(a)(68) of the Exchange Act to define a "security-based swap" as any agreement, contract, or transaction that is a swap, as defined in Section 1(a) of the Commodity Exchange Act,[2] that is based on a narrow-based security index, or a single security or loan, or any interest therein or on the value thereof, or the occurrence or non-occurrence of an event relating to a single issuer of a security or the issuers of securities in a narrow-based security index, provided that such event directly affects the financial statements, financial condition, or financial obligations of the issuer.[3]

Security-based swaps, as securities,[4] will be subject to the general antifraud and anti-manipulation provisions of the federal securities laws (*e.g.,* Section 10(b) of the Exchange Act and Rule 10b–5 thereunder, and Section 17(a) of the Securities Act of 1933 ("Securities Act")) [5] once the relevant provisions of the Dodd-Frank Act take effect.[6] Most security-based swaps are characterized by ongoing payments or deliveries between the parties throughout the life of the security-based swap pursuant to their rights and obligations. Because such payments or deliveries occur after the purchase of a security-based swap but before the sale or termination of the security-based swap,[7] we believe a rule making explicit the liability of persons that engage in misconduct to trigger, avoid, or affect the value of such ongoing payments or deliveries is a measured and reasonable means to prevent fraud, manipulation, and deception in connection with security-based swaps.

Proposed Rule 9j–1 would prohibit the same misconduct as Exchange Act Section 10(b) and Rule 10b–5 thereunder, and Securities Act Section 17(a), but would also explicitly reach misconduct that is in connection with the "exercise of any right or performance of any obligation under" a security-based swap. In other words, proposed Rule 9j–1 would apply to offers,

[1] Public Law 111–203 (July 21, 2010).

[2] 7 U.S.C. 1a. Section 721(b) of the Dodd-Frank Act amends Section 1(a) of the Commodity Exchange Act to add paragraph (47) defining swap, subject to enumerated exceptions, as "any agreement, contract, or transaction: (i) That is a put, call, cap, floor, collar, or similar option of any kind that is for the purchase or sale, or based on the value, of 1 or more interest or other rates, currencies, commodities, securities, instruments of indebtedness, indices, quantitative measures, or other financial or economic interests or property of any kind; (ii) that provides for any purchase, sale, payment, or delivery (other than a dividend on an equity security) that is dependent on the occurrence, nonoccurrence, or the extent of the occurrence of an event or contingency associated with a potential financial, economic, or commercial consequence; (iii) that provides on an executory basis for the exchange, on a fixed or contingent basis, of 1 or more payments based on the value or level of 1 or more interest or other rates, currencies, commodities, securities, instruments of indebtedness, indices, quantitative measures, or other financial or economic interests or property of any kind, or any interest therein or based on the value thereof, and that transfers, as between the parties to the transaction, in whole or in part, the financial risk associated with a future change in any such value or level * * * including any agreement, contract, or transaction commonly known as (I) an interest rate swap; (II) a rate floor; (III) a rate cap; (IV) a rate collar; (V) a cross-currency rate swap; (VI) a basis swap; (VII) a currency swap; (VIII) a foreign exchange swap; (IX) a total return swap; (X) an equity index swap; (XI) an equity swap; (XII) a debt index swap; (XIII) a debt swap; (XIV) a credit spread; (XV) a credit default swap; (XVI) a credit swap; * * * (iv) that is an agreement, contract, or transaction that is, or in the future becomes commonly known to the trade as a swap * * * or (vi) that is any combination or permutation of, or option on, any agreement, contract, or transaction described in any of clauses (i) through (v)."

[3] *See* Section 761(a)(6) of the Dodd-Frank Act. *See also* 15 U.S.C. 78c(a)(68).

[4] *See* Section 761(a)(2) of the Dodd-Frank Act, which amends the definition of "security" in Section 3(a)(10) of the Exchange Act to include security-based swaps. *See also* Section 768(a)(1) of the Dodd-Frank Act, which amends the definition of "security" in Section 2(a)(1) of the Securities Act to include security-based swaps.

[5] Exchange Act Section 10(b) provides that "[i]t shall be unlawful for any person, directly or indirectly * * * (b) to use or employ, in connection with the purchase or sale of any security * * * any manipulative or deceptive device or contrivance in contravention of such rules and regulations as the Commission may prescribe as necessary or appropriate in the public interest or for the protection of investors." 15 U.S.C. 78j.

Rule 10b–5 under the Exchange Act provides that "[i]t shall be unlawful for any person, directly or indirectly * * * (a) to employ any device, scheme, or artifice to defraud, (b) to make any untrue statement of a material fact or to omit to state a material fact necessary in order to make the statements made, in light of the circumstances under which they are made, not misleading, or (c) to engage in any act, practice, or course of business which operates or would operate as a fraud or deceit upon any person, in connection with the purchase or sale of any security." 17 CFR 240.10b–5.

Securities Act Section 17(a) provides that "[i]t shall be unlawful for any person in the offer or sale of securities * * * directly or indirectly—(1) to employ any device, scheme, or artifice to defraud, or (2) to obtain money or property by means of any untrue statement of a material fact or any omission to state a material fact necessary in order to make the statements made, in light of the circumstances under which they are made, not misleading, or (3) to engage in any transaction, practice, or course of business which operates or would operate as a fraud or deceit upon the purchaser." 15 U.S.C. 77q(a).

[6] *See* Section 774 of the Dodd-Frank Act. Security-based swap agreements, as defined in Section 206B of the Gramm-Leach-Bliley Act, 15 U.S.C. 78c note, are currently subject to the general antifraud and anti-manipulation provisions of the federal securities laws (*e.g.,* Section 10(b) of the Exchange Act and Rule 10b–5 thereunder).

[7] The Dodd-Frank Act amended the definitions of "purchase" or "sale" in the Securities Act and Exchange Act to include, in the context of security-based swaps, execution, termination, assignment, exchange, transfer, or extinguishment of rights. *See* Sections 761(a)(3) and (a)(4) of the Dodd-Frank Act (amending Sections 3(a)(13) and (a)(14) of the Exchange Act). *See also* Section 768(a)(3) of the Dodd-Frank Act (amending Section 2(a)(18) of the Securities Act). Therefore, misconduct in connection with these actions will also be prohibited under Exchange Act Section 10(b) and Rule 10b–5 thereunder, and Securities Act Section 17(a).

purchases and sales of security-based swaps in the same way that the general antifraud provisions apply to all securities but would also explicitly apply to the cash flows, payments, deliveries, and other ongoing obligations and rights that are specific to security-based swaps.

II. Background

On July 21, 2010, the President signed into law the Dodd-Frank Act. Title VII of the Dodd-Frank Act, referred to as the Wall Street Transparency and Accountability Act of 2010, establishes a regulatory framework for the regulation of over-the-counter ("OTC") swaps market. Under this framework, in general, swaps are regulated primarily by the Commodity Futures Trading Commission ("CFTC"), and security-based swaps are regulated primarily by the Commission.

Section 763(g) of the Dodd-Frank Act expands the anti-manipulation provisions of Section 9 of the Exchange Act [8] and authorizes the Commission to adopt rules to prevent fraud, manipulation, and deception in connection with security-based swaps. Specifically, Section 763(g) adds new subparagraph (j) to Section 9 to make it unlawful for "any person, directly or indirectly, by the use of any means or instrumentality of interstate commerce or of the mails, or of any facility of any national securities exchange, to effect any transaction in, or to induce or attempt to induce the purchase or sale of, any security-based swap, in connection with which such person engages in any fraudulent, deceptive, or manipulative act or practice, makes any fictitious quotation, or engages in any transaction, practice, or course of business which operates as a fraud or deceit upon any person." [9]

Because Exchange Act Section 9(j) applies to "any person," [10] it would encompass issuers, broker-dealers, security-based swap dealers,[11] major security-based swap participants,[12] persons associated with a security-based swap dealer or major security-based swap participant, security-based swap counterparties, and any customers, clients or other persons that use or employ or effect transactions in security-based swaps, including security-based swaps to hedge or mitigate commercial risk or exposure.[13] Section 763(g) does not include any specific exceptions. In addition, Exchange Act Section 9(j) directs the Commission to "by rules and regulations define, and prescribe means reasonably designed to prevent, such transactions, acts, practices, and courses of business as are fraudulent, deceptive, or manipulative, and such quotations as are fictitious." [14]

III. Proposed Rule 9j–1

As noted above, unlike many other securities, a key characteristic of most security-based swaps is the obligation for and rights to ongoing payments or deliveries between the parties throughout the life of the security-based swap pursuant to the rights and obligations under the security-based swap. For example, a total return swap ("TRS") that is a security-based swap may obligate one of the parties (*i.e.,* the total return payer) to transfer the total economic performance (*e.g.,* income from interest and fees, gains or losses from market movements, and credit losses) of a reference asset (*e.g.,* a debt security) (the "reference underlying"),[15] in exchange for a specified or fixed or floating cash flow (including payments for any principal losses on the reference asset) from the other party (*i.e.,* the total return receiver). This stream of payments, deliveries, or other ongoing obligations or rights between parties to a security-based swap can pose significant risk if, for example, the reference underlying of such security-based swap declines in value or the economic condition of the issuer changes (*e.g.,* defaults or goes into bankruptcy).

The exercise of rights or performance of obligations under a security-based swap can present opportunities and incentives for fraudulent, deceptive, or manipulative conduct. Parties to a security-based swap may engage in misconduct in connection with the security-based swap (including in the reference underlying of such security-based swap) [16] to trigger, avoid, or affect the value of such ongoing payments or deliveries. For instance, a party faced with significant risk exposure may attempt to engage in manipulative or deceptive conduct that increases or decreases the value of payments or cash flow under a security-based swap relative to the value of the reference underlying, including the price or value of a deliverable obligation under a security-based swap. However, because such payments (and the avoidance of such payments) occur after the purchase of a security-based swap but before the sale or termination of the security-based swap, we believe a rule making explicit the illegality of misconduct in connection with such payments is appropriate.

Proposed Rule 9j–1 therefore prohibits the same categories of misconduct as Exchange Act Section 10(b) and Rule 10b–5 thereunder, and Securities Act Section 17(a) [17] in the context of security-based swaps, and

[8] *See* Exchange Act Section 9, 15 U.S.C. 78i.

[9] *See* Exchange Act Section 9(j), 15 U.S.C. 78i(j).

[10] Exchange Act Section 3(a)(9) defines "person" as "a natural person, company, government or, political subdivision, agency, or instrumentality of a government." 15 U.S.C. 78c(a)(9).

[11] Section 761 of the Dodd-Frank Act adds new definitions to Exchange Act Section 3(a). Subject to certain exceptions, Exchange Act Section 3(a)(71)(A) defines "security-based swap dealer" to mean any person who: (i) Holds themself out as a dealer in security-based swaps; (ii) makes a market in security-based swaps; (iii) regularly enters into security-based swaps with counterparties as an ordinary course of business for its own account; or (iv) engages in any activity causing it to be commonly known in the trade as a dealer or market maker in security-based swaps. 15 U.S.C. 78c(a)(71)(A).

[12] "Major security-based swap participant" is defined in Section 3(a)(67)(A) of the Exchange Act as any person: (i) Who is not a security-based swap dealer; and (ii)(I) who maintains a substantial position in security-based swaps for any of the major security-based swap categories, as such categories are determined by the Commission, excluding both positions held for hedging or mitigating commercial risk and positions maintained by any employee benefit plan (or any contract held by such a plan) as defined in paragraphs (3) and (32) of Section 3 of the Employee Retirement Income Security Act of 1974 (29 U.S.C. 1002) for the primary purpose of hedging or mitigating any risk directly associated with the operation of the plan; (II) whose outstanding security-based swaps create substantial counterparty exposure that could have serious adverse effects on the financial stability of the United States banking system or financial markets; or (III) that is a financial entity that (aa) is highly leveraged relative to the amount of capital such entity holds and that is not subject to capital requirements established by an appropriate Federal banking regulator; and (bb) maintains a substantial position in outstanding security-based swaps in any major security-based swap category, as such categories are determined by the Commission. 15 U.S.C. 78c(a)(67)(A).

The terms "security-based swap dealer," "major security-based swap participant," as well as "security-based swap," and other terms will be the subject of joint rulemaking by the Commission and the CFTC. The Commission has issued an advance notice of proposed rulemaking seeking comment on the definitions of key terms relating to the regulation of swaps and security-based swaps. *See* Securities Exchange Act Release No. 62717 (Aug. 13, 2010), 75 FR 51429 (Aug. 20, 2010).

[13] In other words, in contrast to certain other provisions of Title VII of the Dodd-Frank Act, Section 763(g) does not make an exception for end-users.

[14] *See supra* note 9.

[15] As used in this release, the term "reference underlying" of a security-based swap would include any reference asset underlying a security-based swap, including any security underlying a security-based swap, any deliverable obligation under the terms of a security-based swap, any reference obligation, or reference entity under a security-based swap. This could include, for example, securities, instruments of indebtedness, indices, interest rates, quantitative measures, or other financial or economic interests underlying a security-based swap.

[16] *See id.*

[17] *See supra* note 5.

explicitly reaches misconduct in connection with these ongoing payments or deliveries. In particular, proposed Rule 9j–1 would specify that it is unlawful for any person, directly or indirectly, in connection with the offer, purchase or sale of any security-based swap, the exercise of any right or performance of any obligation under a security-based swap, or the avoidance of such exercise or performance: (a) To employ any device, scheme, or artifice to defraud or manipulate; (b) to knowingly or recklessly make any untrue statement of a material fact, or to knowingly or recklessly omit to state a material fact necessary in order to make the statements made, in the light of the circumstances under which they were made, not misleading; (c) to obtain money or property by means of any untrue statement of a material fact or any omission to state a material fact necessary in order to make the statements made, in light of the circumstances under which they were made, not misleading; or (d) to engage in any act, practice, or course of business which operates or would operate as a fraud or deceit upon any person.[18]

The language in paragraph (a) of the proposed rule, which is based on Rule 10b–5(a), differs from Rule 10b–5(a) in that it explicitly prohibits employing any device, scheme or artifice to defraud *or manipulate.* While the term "manipulate" does not appear in the text of Rule 10b–5, Rule 10b–5 has been interpreted to reach manipulative activities. In light of that interpretation, we have added language to clarify that manipulation in connection with security-based swaps is unlawful. We do not anticipate or intend this clarification to represent a departure from the past interpretation or scope of Rule 10b–5(a). In addition, the language in paragraph (b) of the proposed rule, which is based on Rule 10b–5(b), differs from Rule 10b–5(b) in that it explicitly prohibits *knowingly* or *recklessly* making any untrue statement of a material fact, or *knowingly* or *recklessly* omitting to state a material fact necessary in order to make the statements made, in light of the circumstances under which they were made, not misleading. This is intended to make clear, consistent with Rule 10b–5 case law, that paragraph (b), in contrast to paragraph (c), would require scienter. We do not anticipate or intend this clarification to represent a departure from the past interpretation or scope of Rule 10b–5(b).

[18] Proposed Rule 9j–1.

The proposed rule would prohibit a person from engaging in fraudulent and deceptive schemes in order to increase or decrease the price or value of a security-based swap, or disseminating false or misleading statements that affect or otherwise manipulate the price or value of the reference underlying of a security-based swap for the purpose of benefiting such person's position in the security-based swap. The proposed rule would also prevent, for example, disseminating false financial information or data in connection with the sale of a security-based swap or insider trading in a security-based swap.[19]

In addition, the proposed rule would explicitly prohibit misconduct that is in connection with the "exercise of any right or performance of any obligation under" a security-based swap. This would include, for example, misconduct that affects the market value of the security-based swap for purposes of posting collateral or making payments or deliveries under such security-based swap. Thus, the proposed rule would, among other things, prohibit fraudulent conduct (*e.g.,* knowingly or recklessly making a false or misleading statement) in connection with a security-based swap that affects the value of such cash flow, payments, or deliveries, such as by triggering the obligation of a counterparty to make a large payment or to post additional collateral. It would also prohibit a person from taking fraudulent or manipulative action with respect to the reference underlying of the security-based swap that triggers the exercise of a right or performance of an obligation or affects the payments to be made.

The proposed rule also would explicitly prohibit misconduct that avoids the exercise of rights or the performance of obligations under the security-based swap. Thus, it would prohibit a person from making false or misleading statements in order to avoid having to make a large payment, post additional collateral, or perform another obligation under the security-based swap. It would also prohibit a person from taking fraudulent or manipulative action with respect to the reference underlying of the security-based swap that avoids triggering the exercise of a right or performance of an obligation or affects the payments to be made.

Paragraphs (a) and (b) of proposed Rule 9j–1 are modeled after Exchange Act Section 10(b) and Rule 10b–5,[20] and Securities Act Section 17(a)(1),[21] and therefore would require scienter. In contrast, paragraphs (c) and (d) of the proposed rule would not require scienter like Sections 17(a)(2) and (a)(3) of the Securities Act[22] and Section 206(2) of the Investment Advisers Act of 1940 ("Advisers Act").[23] These paragraphs are proposed to prevent conduct that operates as a fraud, manipulation, or deception.

While both paragraphs (b) and (c) of the proposed rule would prohibit

[19] *See also supra* note 5.

[20] To state a claim under Exchange Act Section 10(b) and Rule 10b–5, the Commission must establish that the misstatements or omissions were made with scienter. *See, e.g., Ernst & Ernst* v. *Hochfelder,* 425 U.S. 185, 193 (1976). The Supreme Court has defined scienter as "a mental state embracing intent to deceive, manipulate or defraud." *Id.* Recklessness will generally satisfy the scienter requirement. *See, e.g., Greebel* v. *FTP Software, Inc.,* 194 F.3d 185, 198 (1st Cir. 1999); *SEC* v. *Environmental, Inc.,* 155 F.3d 107, 111 (2d Cir. 1998).

[21] Establishing violations of Securities Act Section 17(a)(1) requires a showing of scienter. *See, e.g., Aaron* v. *SEC,* 446 U.S. 680, 701–02 (1980). Scienter is the "mental state embracing intent to deceive, manipulate or defraud." *Ernst & Ernst* v. *Hochfelder,* 425 U.S. 185, 193 (1976). The Fifth Circuit Court of Appeals has held that scienter is established by a showing that the defendants acted intentionally or with severe recklessness. *See Broad* v. *Rockwell International Corp.,* 642 F.2d 929 (5th Cir.) (*en banc*), *cert. denied,* 454 U.S. 965 (1981).

[22] Actions pursuant to Securities Act Sections 17(a)(2) and 17(a)(3) do not require a showing of scienter. *See, e.g., Aaron,* 446 U.S. at 701–02. In *Aaron,* the Supreme Court sought to determine whether scienter was required in a Commission injunctive proceeding pursuant to the antifraud provisions of Exchange Act Section 10(b) and Securities Act Section 17(a). The Court examined the language of both sections and determined that scienter was required under Section 10(b) because the words "manipulative," "device," and "contrivance," which are used in the statute, evidenced a Congressional intent to proscribe only knowing or intentional misconduct. Similarly, the Court concluded that subsection (1) of Section 17(a) required proof of scienter because Congress used such words as "device," "scheme," and "artifice to defraud." *Aaron,* 446 U.S. at 696. In contrast, the Court concluded that the absence of such words under subsections (2) and (3) of Section 17(a) demonstrated that no scienter was required. Section 17(a)(2) prohibits any person from obtaining money or property "by means of any untrue statement of a material fact or omission to state a material fact," which the Court found to be "devoid of any suggestion whatsoever of a scienter requirement." *Aaron,* 446 U.S. at 696. Similarly, the Court found, in construing Section 17(a)(3), under which it is unlawful for any person "to engage in any transaction, practice, or course of business which operates or would operate as a fraud or deceit," that scienter was not required because it "quite plainly focuses upon the effect of particular conduct on members of the investing public, rather than upon the culpability of the person responsible." *Aaron,* 446 U.S. at 697.

[23] *See, e.g.,* Section 206(2) of the Advisers Act, which prohibits an investment adviser from engaging in "any transaction, practice or course of business which operates as a fraud or deceit upon any client or prospective client." The Commission is not required to demonstrate that an adviser acted with scienter in order to prove a Section 206(2) violation. *SEC* v. *Steadman,* 967 F.2d 636, 643 (D.C. Cir. 1992) (*citing SEC* v. *Capital Gains Research Bureau, Inc.,* 375 U.S. 180, 191–92 (1963)).

material misstatements and omissions,[24] they would address different levels of culpability. Paragraph (b) would apply when there is evidence of scienter (*e.g.,* when a party to a security-based swap knowingly or recklessly makes a false statement even though it may not receive any money or property as a result). In contrast, paragraph (c) would extend to conduct that is at least negligent (*e.g.,* when a party to a security-based swap knows or reasonably should know that a statement was false or misleading and directly or indirectly obtains money or property from such statement).

Because the proposed rule would apply to conduct "in connection with * * * a security-based swap" it would apply to fraud, manipulation, or deception involving the reference underlying[25] of such security-based swap to the extent that such misconduct is in connection with the offer, purchase or sale of any security-based swap, the exercise of any right or performance of any obligation under a security-based swap, or the avoidance of such exercise or performance (*e.g.,* manipulative activity in the reference underlying that affects the price of the security-based swap, including misconduct in the reference underlying of a security-based swap that triggers, avoids, or affects the value of ongoing payments or other delivery obligations under such security-based swap).[26] Depending on the facts and circumstances, misconduct involving a security that is also a reference underlying of any security-based swap may not necessarily be "in connection with" the offer, purchase or sale of any security-based swap, the exercise of any right or performance of any obligation under a security-based swap, or the avoidance of such exercise or performance, and therefore a violation of Rule 9j–1. The Commission, in determining whether to bring an enforcement action under Rule 9j–1 for misconduct involving such a security, would consider the facts and circumstances associated with the misconduct, including, among other things, the extent to which the effect of the misconduct on one or more security-based swaps is foreseeable to the party engaging in the misconduct or the purpose or the interest of that party.

Consistent with Section 9(j) of the Exchange Act, the proposed rule would apply to "any person."[27] In addition, the proposed rule would also apply to misconduct "directly or indirectly" engaged in by such person (*i.e.,* whether the person engages in the misconduct alone or through others).[28]

The Commission preliminarily believes that Proposed Rule 9j–1 is reasonably designed to prevent fraud and manipulation in transactions in security-based swaps and inducements to purchase or sell security-based swaps. Because fraud and manipulation that affect the value of the payments or deliveries pursuant to a security-based swap are likely to distort the price and market for such security-based swaps, they can undermine investor confidence in the integrity of the market for security-based swaps, as well as the market for the reference underlying of such security-based swap. The proposed rule is intended to parallel the general antifraud provisions applicable to all securities, while also explicitly addressing the characteristics of cash flows, payments, deliveries, and other obligations and rights that are specific to security-based swaps. By targeting misconduct that is specific to the ways in which security-based swaps are structured and used, the proposed rule should help to prevent such fraudulent and manipulative conduct—without interfering with or otherwise unduly inhibiting legitimate market or business activity.

While the proposed rule is modeled on existing securities laws prohibiting fraud, manipulation, and deception in connection with security-based swaps, it is not intended to limit or extend liability in connection with non-swap securities to "rights or obligations" that do not involve purchases or sales. In other words, the scope of the proposed rule is not intended to affect the application or interpretation of the other antifraud provisions under the federal securities laws.

Finally, as noted above, the Dodd-Frank Act included security-based swaps in the definition of "security" under the Securities Act and the Exchange Act.[29] Thus, once the relevant provisions of the Dodd-Frank Act take effect,[30] persons effecting transactions in, or engaged in acts, practices, and courses of business involving security-based swaps will be subject to the Commission's rules and regulations that define and proscribe acts and practices involving securities that are deemed manipulative, deceptive, fraudulent, or otherwise unlawful for purposes of the general antifraud and anti-manipulation provisions of the federal securities laws, including Exchange Act Section 10(b), Rule 10b–5 (and the prohibitions against insider trading), and Securities Act Section 17(a).[31]

IV. Request for Comment

The Commission seeks comment generally on all aspects of proposed Rule 9j–1. We encourage commenters to present data on our proposals and any suggested alternative approaches.

In addition, we seek specific comment on the following:

Does the reference in the proposed rule to "in connection with the offer, purchase or sale of a security-based swap, the exercise of any right or performance of any obligation under a security-based swap, or the avoidance of such exercise or performance" address the full scope of potentially fraudulent, manipulative, or deceptive conduct that pertains to security-based swaps? If not, how should the scope of these provisions be modified? Are there types of conduct not otherwise discussed above that should be addressed by the proposed rule? Commenters are invited to provide specific examples of such conduct.

Please discuss how and to what extent the proposed rule may affect issuers, broker-dealers, security-based swap dealers, major security-based swap participants, and other swap market participants. Are there other alternatives or additional, or different, approaches that the Commission should consider as means reasonably designed to prevent "such transactions, acts, practices, and courses of business as are fraudulent, deceptive, or manipulative"? In addition, are there specific practices that the Commission should explicitly

[24] Consistent with Exchange Act Section 10(b), such misstatements and omissions must be material to be actionable. *See, e.g., Basic* v. *Levinson,* 485 U.S. 224, 233 (1988). Statements and omissions are material if there is a substantial likelihood that a reasonable investor would consider the information important in making an investment decision. *See id.* at 231–32; *TSC Indus., Inc.* v. *Northway, Inc.,* 426 U.S. 438, 449 (1976).

[25] *See supra* note 15 (defining "reference underlying" of a security-based swap to include, for example, any reference asset, reference security, reference entity, or reference obligation underlying a security-based swap).

[26] *See Superintendent of Insurance* v. *Bankers Life and Casualty Co.,* 404 U.S. 6, 12–13 (1971) (to satisfy the "in connection with" requirement, the fraud need only "touch" on the purchase or sale of a security). *See also SEC* v. *Texas Gulf Sulphur Co.,* 401 F.2d 833, 860 (2d Cir. 1968) (en banc) (concluding that "Congress when it used the phrase "in connection with the purchase or sale of any security" intended only that the device employed, whatever it might be, be of a sort that would cause reasonable investors to rely thereon, and, in connection therewith, so relying, cause them to purchase or sell a corporation's securities").

[27] *See* text *supra* at notes 10–13.

[28] The terms "directly and indirectly" are intended to describe the level of involvement necessary to establish liability under the proposed rule. *See also id.*

[29] *See supra* note 4 (defining "security" under the Securities Act and Exchange Act to include "security-based swaps").

[30] *See supra* note 6.

[31] *See, e.g.,* Exchange Act Rules 10b–1 through 10b–21; 17 CFR 240.10–1 through 240.10b–21.

restrict or permit as part of the proposed rule? Comments are invited regarding any prophylactic rules that would further enhance the integrity of the security-based swap markets.

Although much of the activity that would be prohibited by the proposed rule is already prohibited by the general antifraud and anti-manipulation provisions of the Federal securities laws (*e.g.,* Exchange Act Section 10(b) and Rule 10b–5 thereunder, and Securities Act Section 17(a)), to what extent, if any, would the proposed rule affect the nature of the security-based swap market in general, including the extent or nature of information shared between market participants? If so, in what ways and to what degree?

Are there any legitimate market activities that the proposed rule could have the effect of discouraging? Commenters are invited to provide specific examples of any such activities and any such potential effect.

Are there any specific issues with respect to the application of the proposed rule to fraudulent, manipulative, or deceptive activity involving security-based swaps (including the reference underlying of such security-based swaps) that are or will be effected on or through security-based swap execution facilities or national securities exchanges, or over-the-counter? Please explain.

To what extent are transactions in security-based swaps used as a functional or economic substitute or equivalent transaction for transactions or practices that are otherwise prohibited by the antifraud and anti-manipulation provisions of the Exchange Act? Should the proposed rule impose any restrictions on such transactions? Commenters are invited to provide specific examples.

What, if any, costs or burdens would be imposed by the proposed rule? Would the proposed rule create any costs associated with changes to business operations or supervisory practices or systems? How much would the proposed rule affect compliance costs for issuers, broker-dealers, security-based swap dealers, major security-based swap participants, and other swap market participants (*e.g.,* personnel or procedural changes)? We seek comment on the costs of compliance that may arise.

V. General Request for Comment

The Commission seeks comment generally on all aspects of proposed Rule 9j–1. Commenters are requested to provide empirical data or economic studies to support their views and arguments related to proposed rule. In addition to the questions above, commenters are welcome to offer their views on any other matter raised by the proposed rule. With respect to any comments, we note that they are of greatest assistance to our rulemaking initiative if accompanied by supporting data and analysis of the issues addressed in those comments and if accompanied by alternative suggestions to our proposal where appropriate.

VI. Paperwork Reduction Act

Proposed Rule 9j–1 does not contain a "collection of information" requirement within the meaning of the Paperwork Reduction Act of 1995.[32] An agency may not conduct or sponsor, and a person is not required to respond to, a collection of information unless it displays a currently valid OMB control number.

VII. Consideration of Costs and Benefits

The Commission is considering the costs and benefits of proposed Rule 9j–1. The Commission is sensitive to these costs and benefits, and encourages commenters to discuss any additional costs or benefits beyond those discussed here, as well as any reductions in costs. In particular, the Commission requests comment on the potential costs for any modification market participants' business operations or supervisory practices or systems, as well as any potential benefits resulting from the proposed rule for issuers, investors, broker-dealers, security-based swap dealers, major security-based swap participants, persons associated with a security-based swap dealer or a major security-based swap participant, other security-based swap industry professionals, regulators, and other market participants. The Commission also seeks comments on the accuracy of any of the benefits identified and also welcomes comments on any of the costs identified here. Finally, the Commission encourages commenters to identify, discuss, analyze, and supply relevant data, information, or statistics regarding any such costs or benefits.

A. Benefits

Proposed Rule 9j–1 would specify that it is unlawful for any person, directly or indirectly, in connection with the offer, purchase or sale of any security-based swap, the exercise of any right or performance of any obligation under a security based swap, or the avoidance of such exercise or performance, to: (a) To employ any device, scheme, or artifice to defraud or manipulate; (b) to knowingly or recklessly make any untrue statement of a material fact, or to knowingly or recklessly omit to state a material fact necessary in order to make the statements made, in the light of the circumstances under which they were made, not misleading; (c) to obtain money or property by means of any untrue statement of a material fact or any omission to state a material fact necessary in order to make the statements made, in light of the circumstances under which they were made, not misleading; or (d) to engage in any act, practice, or course of business which operates or would operate as a fraud or deceit upon any person.[33]

Thus, proposed Rule 9j–1 would prohibit the same misconduct as Exchange Act Section 10(b) and Rule 10b–5 thereunder, and Securities Act Section 17(a)[34] but would also explicitly reach misconduct that is in connection with the "exercise of any right or performance of any obligation under" a security-based swap. In other words, proposed Rule 9j–1 would apply to offers, purchases and sales of security-based swaps in the same way that the general antifraud provisions apply to all securities but would also explicitly apply to the cash flows, payments, deliveries, and other ongoing obligations and rights that are specific to security-based swaps. This would include, for example, misconduct that affects the market value of the security-based swap for purposes of posting collateral or making payments or deliveries under a security-based swap. Thus, the proposed rule would, among other things, prohibit a person who is a party to a security-based swap from later engaging in fraudulent conduct (*e.g.,* knowingly making a false or misleading statement) that affects the value of cash flow, payments, or deliveries, such as triggering the obligation of a counterparty to make a large payment or to post additional collateral.

By prohibiting fraud, manipulation, and deception in connection with the exercise of any rights or performance of any obligations under a security-based swap, including actions taken to avoid the triggering of such exercise or performance, the proposed rule would help to prevent such misconduct from distorting the price and market for such security-based swap, as well as for the reference underlying, and improperly interfering with the independent and proper functioning of the markets. We therefore believe that the proposed rule would benefit market participants and

[32] 44 U.S.C. 3501 *et seq.*

[33] *See* Proposed Rule 9j–1.

[34] *See supra* note 5.

investors by promoting investor confidence in the integrity of the market for security-based swaps, as well as for the reference underlying [35] of such security-based swaps.

The proposed rule should prevent fraud, manipulation, and deception from causing prices of security-based swaps to deviate from their fundamental values. This would allow the Commission to guard against misconduct that improperly interferes with the independent and proper functioning of the markets and help to promote price efficiency, the integrity of the price discovery process, and fair dealing between market participants in connection with security-based swaps.

We solicit comment on any additional short-term and long-term benefits that could be realized with the proposed rule. Specifically, we solicit comment regarding benefits to the efficient operation of security-based swap markets, price efficiency, market integrity, and investor protection.

B. Costs

As an aid in evaluating costs and reductions in costs associated with proposed Rule 9j–1, the Commission requests the public's views and any supporting information.

By targeting misconduct that is specific to how security-based swaps are structured and used, the proposed rule is intended to be a measured and reasonable means to prevent fraudulent, deceptive, or manipulative acts or practices in connection with the exercise of any right or performance of any obligation under a security-based swap without interfering with or otherwise inhibiting legitimate market activity.

Because proposed Rule 9j–1 is intended to parallel the general antifraud provisions already applicable to all securities, while also explicitly addressing the characteristics of cash flows, payments, deliveries, and other obligations and rights that are specific to security-based swaps, we do not believe that the proposed rule would impose any significant costs on persons effecting transactions or otherwise trading in security-based swaps. As noted above, the Commission seeks comment on whether the proposed rule could discourage certain legitimate market activities because of concern that such activities might be viewed as a violation of the rule.

In addition, persons effecting transactions or otherwise trading in security-based swaps may incur costs associated with changes to business operations or supervisory practices or systems. However, we believe that, because most issuers, broker-dealers, security-based swap dealers, major security-based swap participants, and other swap market participants involved with security-based swaps are already subject to the general antifraud and anti-manipulation provisions, much of these practices and systems would already be in place. Thus, we believe that any costs associated with the proposed rule for such changes (*e.g.,* business or procedural changes) would be minimal.

The Commission believes that the proposed rule would not compromise investor protection. We seek data, however, supporting any potential costs associated with the proposed rule. In addition, we request specific comment on any changes to business operations or supervisory practices or systems that might be necessary to implement the proposed rule.

VIII. Consideration of Burden on Competition and Promotion of Efficiency, Competition and Capital Formation

Section 3(f) of the Exchange Act [36] requires the Commission, whenever it engages in rulemaking and is required to consider or determine whether an action is necessary or appropriate in the public interest, to consider whether the action would promote efficiency, competition, and capital formation. In addition, Section 23(a)(2) of the Exchange Act [37] requires the Commission, when making rules under the Exchange Act, to consider the impact of such rules on competition. Section 23(a)(2) also prohibits the Commission from adopting any rule that would impose a burden on competition not necessary or appropriate in furtherance of the purposes of the Exchange Act.

Proposed Rule 9j–1 is intended to prevent fraud, manipulation, and deception in connection with the offer, purchase or sale of any security-based swap, the exercise of any right or performance of any obligation under a security-based swap, or the avoidance of such exercise or performance. Proposed Rule 9j–1 would prohibit the same misconduct as Exchange Act Section 10(b) and Rule 10b–5 thereunder, and Securities Act Section 17(a) [38] but would also explicitly reach misconduct that is in connection with the "exercise of any right or performance of any obligation under" a security-based swap. In other words, proposed Rule 9j–1 would apply to offers, purchases and sales of security-based swaps in the same way that the general antifraud provisions apply to all securities but would also explicitly apply to the cash flows, payments, deliveries, and other ongoing obligations and rights that are specific to security-based swaps.

By targeting specific misconduct that is specific to how security-based swaps are structured and used, the proposed rule is intended to be a measured and reasonable means to prevent misconduct that is "in connection with the exercise of any right or performance of any obligation under" a security-based swap without interfering with or otherwise unduly inhibiting legitimate market activity. Also, because the proposed rule would prohibit the same misconduct as Exchange Act Section 10(b) and Rule 10b–5 thereunder, and Securities Act Section 17(a),[39] except to explicitly reach misconduct that is "in connection with the exercise of any right or performance of any obligation under" a security-based swap, we believe that the proposed rule would not have an adverse effect on price efficiency. If the proposed rule mitigates fraudulent behavior, price efficiency should improve.

By prohibiting fraud, manipulation, and deception in connection with security-based swaps (including the exercise of any right or performance of any obligation under a security-based swap or the avoidance thereof), the proposed rule would help to prevent such conduct from distorting the market and artificially increasing or decreasing prices for security-based swaps. Thus, we believe the proposed rule would help to ensure price accuracy and fairness for the parties, which are elements of efficiency.

We also believe a rule highlighting the illegality of these activities would focus the attention of swap market participants on such activities and would reduce regulatory uncertainty for swap market participants and investors and would not impose significant costs on customers. We seek comment regarding whether proposed Rule 9j–1 may have any adverse effects on liquidity, market operations, or risks or costs to customers.

In addition, as discussed above, because the proposed rule would prohibit the same misconduct as Exchange Act Section 10(b) and Rule 10b–5 thereunder, and Securities Act Section 17(a),[40] except to explicitly reach misconduct that is "in connection with the exercise of any right or performance of any obligation (or the

[35] *See supra* note 15.

[36] 15 U.S.C. 78c(f).

[37] 15 U.S.C. 78w(a)(2).

[38] *See supra* note 5.

[39] *See id.*

[40] *See id.*

avoidance of such exercise or performance) under" a security-based swap, we believe that the proposed rule would have minimal impact on the promotion of capital formation. Fraudulent and manipulative conduct in connection with security-based swaps can undermine the confidence of investors, not only in the market for the security-based swaps but also in the market for the reference underlying of such security-based swaps. For the same reasons, the proposed rule should promote capital formation by discouraging misconduct in connection with the performance of security-based swaps that could otherwise undermine investor confidence or the ability of investors to make investment decisions that are congruent to their investment objectives.

Thus, we believe that the proposed rule would promote capital formation by helping to eliminate abuses in connection with security-based swaps. We seek specific comment and empirical data, if available, on the potential impact of the proposed rule on capital formation, including whether the proposed rule would promote or inhibit capital formation, and if so, how.

In addition, the prohibitions of the proposed rule would apply uniformly to all persons (*e.g.,* issuers, broker-dealers, security-based swap dealers, major security-based swap participants, and all other swap market participants and investors) effecting transactions or otherwise trading in security-based swaps and, therefore, should not impose a burden on competition. Also, the proposed rule would prohibit the same misconduct as Exchange Act 10(b) and Rule 10b–5 thereunder, and Securities Act Section 17(a),[41] except to explicitly reach misconduct that is in connection with the exercise of any rights or performance of any obligations under a security–based swap and, therefore, the proposed rule should not impose a burden on competition. By applying uniformly to all persons and by discouraging swap market participants from engaging in unfair fraudulent, manipulative, and deceptive conduct in connection with security-based swaps, we preliminarily do not believe that the proposed rule will pose a burden on competition and would also promote competition.

We request comment on whether the proposed rule would promote efficiency, competition, and capital formation or have an impact or burden on competition. Commenters are requested to provide empirical data and other factual support for their view to the extent possible.

IX. Consideration of Impact on the Economy

For purposes of the Small Business Regulatory Enforcement Fairness Act of 1996, or "SBREFA,"[42] the Commission must advise the OMB as to whether the proposed regulation constitutes a "major" rule. Under SBREFA, a rule is considered "major" where, if adopted, it results or is likely to result in: (1) An annual effect on the economy of $100 million or more (either in the form of an increase or a decrease); (2) a major increase in costs or prices for consumers or individual industries; or (3) significant adverse effect on competition, investment or innovation. If a rule is "major," its effectiveness will generally be delayed for 60 days pending Congressional review.

The Commission requests comment on the potential impact of proposed Rule 9j–1 on the economy on an annual basis, any potential increase in costs or prices for consumers or individual industries, and any potential effect on competition, investment or innovation. Commenters are requested to provide empirical data and other factual support for their view to the extent possible.

X. Regulatory Flexibility Certification

The Regulatory Flexibility Act ("RFA")[43] requires Federal agencies, in promulgating rules, to consider the impact of those rules on small entities. Section 603(a)[44] of the Administrative Procedure Act,[45] as amended by the RFA, generally requires the Commission to undertake a regulatory flexibility analysis of all proposed rules, or proposed rule amendments, to determine the impact of such rulemaking on "small entities."[46] Section 605(b) of the RFA states that this requirement shall not apply to any proposed rule or proposed rule amendment, which if adopted, would not have a significant economic impact on a substantial number of small entities.[47]

For purposes of Commission rulemaking in connection with the RFA, a small entity includes: (i) When used with reference to an "issuer" or a "person," other than an investment company, an "issuer" or "person" that, on the last day of its most recent fiscal year, had total assets of $5 million or less,[48] or (ii) a broker-dealer with total capital (net worth plus subordinated liabilities) of less than $500,000 on the date in the prior fiscal year as of which its audited financial statements were prepared pursuant to Rule 17a–5(d) under the Exchange Act,[49] or, if not required to file such statements, a broker-dealer with total capital (net worth plus subordinated liabilities) of less than $500,000 on the last day of the preceding fiscal year (or in the time that it has been in business, if shorter); and is not affiliated with any person (other than a natural person) that is not a small business or small organization.[50] Under the standards adopted by the Small Business Administration, small entities in the finance and insurance industry include the following: (i) For entities in credit intermediation and related activities, entities with $175 million or less in assets or, for non-depository credit intermediation and certain other activities, $7 million or less in annual receipts; (ii) for entities in financial investments and related activities, entities with $7 million or less in annual receipts; (iii) for insurance carriers and entities in related activities, entities with $7 million or less in annual receipts; and (iv) for funds, trusts, and other financial vehicles, entities with $7 million or less in annual receipts.[51]

Based on the Commission's existing information about the security-based swap market, the Commission preliminarily believes that the security-based swap market, while broad in scope, is largely dominated by entities such as those that would be covered by the "security-based swap dealer" and "major security-based swap market participant" definitions.[52] The Commission preliminarily believes that entities that will qualify as security-based swap dealers and major security-based swap market participants, whether registered broker-dealers or not, exceed the thresholds defining "small entities" set out above. Moreover, while it is possible that other parties may engage in security-based swap transactions, the Commission

[41] *See id.*

[42] Public Law 104–121, Title II, 110 Stat. 857 (1996) (codified in various sections of 5 U.S.C., 15 U.S.C. and as a note to 5 U.S.C. 601).

[43] 5 U.S.C. 601 *et seq.*

[44] 5 U.S.C. 603(a).

[45] 5 U.S.C. 551 *et seq.*

[46] Although Section 601(b) of the RFA defines the term "small entity," the statute permits agencies to formulate their own definitions. The Commission has adopted definitions for the term small entity for the purposes of Commission rulemaking in accordance with the RFA. Those definitions, as relevant to this proposed rulemaking, are set forth in Rule 0–10, 17 CFR 240.0–10. *See* Securities Exchange Act Release No. 18451 (January 28, 1982), 47 FR 5215 (February 4, 1982) (File No. AS–305).

[47] *See* 5 U.S.C. 605(b).

[48] *See* 17 CFR 240.0–10(a).

[49] *See* 17 CFR 240.17a–5(d).

[50] *See* 17 CFR 240.0–10(c).

[51] *See* 13 CFR 121.201 (Jan. 1, 2010).

[52] *See supra* notes 11 and 12.

preliminarily does not believe that any such entities would be "small entities" as defined in Exchange Act Rule 0–10.[53] Feedback from industry participants about the security-based swap markets indicates that only persons or entities with assets significantly in excess of $5 million (or with annual receipts significantly in excess of $7 million) participate in the security-based swap market. Even to the extent that a handful of transactions did have a counterparty that was defined as a "small entity" under the Commission Rule 0–10, we believe it is unlikely that proposed Rule 9j–1 would have a significant economic impact on such entity, as the rule prohibits fraudulent and manipulative acts, activities which are in most cases already prohibited. Finally, because the proposed rule applies to any person, the proposed rule applies equally to large and small entities and therefore would not have a disproportionate impact on small entities. Therefore, the Commission preliminarily does not believe that proposed Rule 9j–1 will have an impact on "small entities" in terms of the prohibitions included in the proposed rule.

For the foregoing reasons, the Commission certifies that proposed Rule 9j–1 would not have a significant economic impact on a substantial number of small entities for purposes of the RFA. The Commission encourages written comments regarding this certification. The Commission requests that commenters describe the nature of any impact on small entities and provide empirical data to support the extent of the impact.

XI. Statutory Authority

Pursuant to Exchange Act and, particularly, Sections 2, 3(b), 9(i), 9(j), 10, 15, 15F, and 23(a) thereof, 15 U.S.C. 78b, 78c(b), 78i(i), 78i(j), 78j, 78o, 78o–8, and 78w(a), the Commission is proposing a new antifraud rule, Rule 9j–1, to address fraud, manipulation, and deception in connection with security-based swaps.

List of Subjects in 17 CFR Part 240

Brokers, Reporting and recordkeeping requirements, Securities.

Text of the Proposed Rule

For the reasons set forth in the preamble, Title 17, Chapter II of the Code of Federal Regulations is proposed to be amended as follows:

[53] *See* 17 CFR 240.0–10(a).

PART 240—GENERAL RULES AND REGULATIONS, SECURITIES EXCHANGE ACT OF 1934

1. The authority citation for part 240 is amended by adding an authority for § 240.9j–1 to read as follows:

Authority: 15 U.S.C. 77c, 77d, 77g, 77j, 77s, 77z–2, 77z–3, 77eee, 77ggg, 77nnn, 77sss, 77ttt, 78b, 78c, 78d, 78e, 78f, 78g, 78i, 78j, 78j–1, 78k, 78k–1, 78*l,* 78m, 78n, 78o, 78o–8, 78p, 78q, 78s, 78u–5, 78w, 78x, 78*ll,* 78mm, 80a–20, 80a–23, 80a–29, 80a–37, 80b–3, 80b–4, 80b–11, and 7201 *et seq.;* and 18 U.S.C. 1350, unless otherwise noted.

Section 240.9j–1 is also issued under sec. 943, Pub. L. No. 111–203, 124 Stat. 1376.

2. Add § 240.9j–1 to read as follows:

§ 240.9j–1. Prohibition against fraud, manipulation, and deception in connection with security-based swaps.

It shall be unlawful for any person, directly or indirectly, in connection with the offer, purchase or sale of any security-based swap, the exercise of any right or performance of any obligation under a security-based swap, or the avoidance of such exercise or performance,

(a) To employ any device, scheme, or artifice to defraud or manipulate;

(b) To knowingly or recklessly make any untrue statement of a material fact, or to knowingly or recklessly omit to state a material fact necessary in order to make the statements made, in the light of the circumstances under which they were made, not misleading;

(c) To obtain money or property by means of any untrue statement of a material fact or any omission to state a material fact necessary in order to make the statements made, in light of the circumstances under which they were made, not misleading; or

(d) To engage in any act, practice, or course of business which operates or would operate as a fraud or deceit upon any person.

By the Commission.

Dated: November 3, 2010.

Elizabeth M. Murphy,

Secretary.

[FR Doc. 2010–28136 Filed 11–5–10; 8:45 am]

BILLING CODE 8011–01–P

DEPARTMENT OF HOMELAND SECURITY

United States Coast Guard

33 CFR Part 167

[USCG–2010–0833]

Port Access Route Study: In the Bering Strait

AGENCY: Coast Guard, DHS.

ACTION: Notice of study; request for comments.

SUMMARY: The Coast Guard (USCG) is conducting a Port Access Route Study (PARS) to evaluate: The continued applicability of and the need for modifications to current vessel routing measures; and the need for creation of new vessel routing measures in the Bering Strait. The goal of the study is to help reduce the risk of marine casualties and increase the efficiency of vessel traffic in the study area. The recommendations of the study may lead to future rulemaking action or appropriate international agreements.

DATES: Comments and related material must either be submitted to our online docket via *http://www.regulations.gov* on or before May 9, 2011 or reach the Docket Management Facility by that date.

ADDRESSES: You may submit comments identified by docket number USCG–2010–0833 using any one of the following methods:

- *Federal eRulemaking Portal: http://www.regulations.gov.*
- *Fax:* 202–493–2251.
- *Mail:* Docket Management Facility (M–30), U.S. Department of Transportation, West Building Ground Floor, Room W12–140, 1200 New Jersey Avenue, SE., Washington, DC 20590–0001.
- *Hand Delivery:* Same as mail address above, between 9 a.m. and 5 p.m., Monday through Friday, except Federal holidays. The telephone number is 202–366–9329.

To avoid duplication, please use only one of these four methods. *See* the "Public Participation and Request for Comments" portion of the **SUPPLEMENTARY INFORMATION** section below for instructions on submitting comments.

FOR FURTHER INFORMATION CONTACT: If you have questions on this notice of study, call or e-mail Lieutenant Faith Reynolds, Project Officer, Seventeenth Coast Guard District, telephone 907–463–2270; e-mail *Faith.A.Reynolds@uscg.mil;* or George Detweiler, Office of Waterways

Management, Coast Guard, telephone 202–372–1566, e-mail *George.H.Detweiler@uscg.mil.* If you have questions on viewing or submitting material to the docket, call Ms. Renee K. Wright, Program Manager, Docket Operations, telephone 202–366–9826.

SUPPLEMENTARY INFORMATION:

Public Participation and Request for Comments

We encourage you to participate in this study by submitting comments and related materials. All comments received will be posted, without change, to *http://www.regulations.gov* and will include any personal information you have provided.

Submitting comments: If you submit comments, please include the docket number for this notice (USCG–2010–0833), indicate the specific section of this document to which each comment applies, and provide a reason for each suggestion or recommendation. You may submit your comments and material online, or by fax, mail or hand delivery, but please use only one of these means. We recommend that you include your name and a mailing address, an e-mail address, or a telephone number in the body of your document so that we can contact you if we have questions regarding your submission.

To submit your comment online, go to *http://www.regulations.gov,* click on the "submit a comment" box, which will then become highlighted in blue. In the "Document Type" drop down menu select "Notices" and insert "USCG–2010–0833" in the "Keyword" box. Click "Search" then click on the balloon shape in the "Actions" column. If you submit your comments by mail or hand delivery, submit them in an unbound format, no larger than 8 ½ by 11 inches, suitable for copying and electronic filing. If you submit them by mail and would like to know that they reached the Facility, please enclose a stamped, self-addressed postcard or envelope. We will consider all comments and material received during the comment period.

Viewing comments and documents: To view comments and documents mentioned in this preamble as being available in the docket, go to *http://www.regulations.gov,* click on the "read comments" box, which will then become highlighted in blue. In the "Keyword" box insert "USCG–2010–0833" and click "Search." Click the "Open Docket Folder" in the "Actions" column. If you do not have access to the internet, you may view the docket online by visiting the Docket Management Facility in Room W12–140 on the ground floor of the Department of Transportation West Building, 1200 New Jersey Avenue, SE., Washington, DC 20590, between 9 a.m. and 5 p.m., Monday through Friday, except Federal holidays. We have an agreement with the Department of Transportation to use the Docket Management Facility.

Privacy Act: Anyone can search the electronic form of comments received into any of our dockets by the name of the individual submitting the comment (or signing the comment, if submitted on behalf of an association, business, labor union, etc.). You may review a Privacy Act, system of records notice regarding our public dockets in the January 17, 2008, issue of the **Federal Register** (73 FR 3316).

Definitions

The following definitions (except "Regulated Navigation Area") are from the International Maritime Organization's (IMO's) publication "*Ships' Routeing*" Tenth Edition 2010 and should help you review this notice:

Area to be avoided (ATBA) means a routing measure comprising an area within defined limits in which either navigation is particularly hazardous or it is exceptionally important to avoid casualties and which should be avoided by all ships, or certain classes of ships.

Deep-water route means a route within defined limits, which has been accurately surveyed for clearance of sea bottom and submerged obstacles as indicated on the chart.

Inshore traffic zone means a routing measure comprising a designated area between the landward boundary of a traffic separation scheme and the adjacent coast, to be used in accordance with the provisions of Rule 10(d), as amended, of the International Regulations for Preventing Collisions at Sea, 1972 (COLREGS).

Precautionary area means a routing measure comprising an area within defined limits where ships must navigate with particular caution and within which the direction of traffic flow may be recommended.

Recommended route means a route of undefined width, for the convenience of ships in transit, which is often marked by centerline buoys.

Recommended track is a route which has been specially examined to ensure so far as possible that it is free of dangers and along which vessels are advised to navigate.

Regulated Navigation Area (*RNA)* means a water area within a defined boundary for which regulations for vessels navigating within the area have been established under 33 CFR part 165.

Roundabout means a routing measure comprising a separation point or circular separation zone and a circular traffic lane within defined limits. Traffic within the roundabout is separated by moving in a counterclockwise direction around the separation point or zone.

Separation zone or *separation line* means a zone or line separating the traffic lanes in which ships are proceeding in opposite or nearly opposite directions; or separating a traffic lane from the adjacent sea area; or separating traffic lanes designated for particular classes of ship proceeding in the same direction.

Traffic lane means an area within defined limits in which one-way traffic is established. Natural obstacles, including those forming separation zones, may constitute a boundary.

Traffic Separation Scheme (TSS) means a routing measure aimed at the separation of opposing streams of traffic by appropriate means and by the establishment of traffic lanes.

Two-way route means a route within defined limits inside which two-way traffic is established, aimed at providing safe passage of ships through waters where navigation is difficult or dangerous.

Vessel routing system means any system of one or more routes or routing measures aimed at reducing the risk of casualties; it includes traffic separation schemes, two-way routes, recommended tracks, areas to be avoided, no anchoring areas, inshore traffic zones, roundabouts, precautionary areas, and deep-water routes.

Background and Purpose

Requirement for Port Access Route Studies

Under the Ports and Waterways Safety Act (PWSA) (33 U.S.C. 1223(c)), the Commandant of the Coast Guard may designate necessary fairways and traffic separation schemes (TSSs) to provide safe access routes for vessels proceeding to and from U.S. ports. The designation of fairways and TSSs recognizes the paramount right of navigation over all other uses in the designated areas.

The PWSA requires the Coast Guard to conduct a study of potential traffic density and the need for safe access routes for vessels before establishing or adjusting fairways or TSSs. Through the study process, we must coordinate with Federal, State, and foreign state agencies (as appropriate) and consider the views of maritime community representatives, environmental groups, and other interested stakeholders. A primary purpose of this coordination is, to the extent practicable, to reconcile the need for safe access routes with other reasonable waterway uses.

Previous Port Access Route Studies

A port access route study was announced in the **Federal Register** on April 16, 1979 (44 FR 22543) and modified on January 31, 1980 (45 FR 7026) that studied the whole of Alaska's maritime coast. Notice of study results were published on December 14, 1981 (46 FR 61049). Only a portion of the current study area was included in the previous port access route study, as the previous study excluded all areas west of 170 degrees West longitude and also did not consider areas north of the Bering Strait.

Necessity for a New Port Access Route Study

The Coast Guard is always seeking ways to enhance the safety of life at sea. Since 2007's record minimum for summer sea ice cover in the Arctic, international attention has been focused on the region and its potential accessibility for shipping and natural resource exploration. One significant study released in April 2009 by the Arctic Council entitled "Arctic Marine Shipping Assessment" noted both the sparse nature of aids to navigation in the United States Arctic as well as the absence of vessel routing measures in the Bering Strait. According to the study, significant increases in shipping are not expected in the near term. However, the U.S. Coast Guard desires to begin its study process so that essential safeguards are in place in advance of any future shipping increase.

The Coast Guard has identified a potential safety enhancement by increasing predictability of vessel traffic patterns in this area with an established vessel routing system. When vessels follow predictable and charted routing measures such as a TSS, congestion may be reduced, and mariners may be better able to predict where vessel interactions may occur and act accordingly.

This study will assess whether the creation of a vessel routing system is advisable to increase the predictability of vessel movements, which may decrease the potential for collisions, oil spills, and other events that could threaten the marine environment.

There are numerous interested stakeholders with concerns regarding this region, and the U.S. Coast Guard is committed to ensuring that all viewpoints are obtained and considered prior to moving forward with any vessel routing measure implementation.

Timeline, Study Area, and Process of this PARS: The Seventeenth Coast Guard District will conduct this PARS. The study will begin immediately upon publication of this notice and should take at least 24 months to complete.

The study area is described as an area bounded by a line connecting the following geographic positions:

- 62°30′ N, 173°00′ W;
- 62°30′ N, 167°30′ W;
- 67°30′ N, 167°30′ W;
- 67°30′ N, 168°58′37″ W, thence following the Russian Federation/United States maritime boundary line to position
- 63°40′ N, 173°00′ W, thence to the first geographical position.

As part of this study, we will analyze vessel traffic density, agency and stakeholder experience in vessel traffic management, navigation, ship handling, and effects of weather. We encourage you to participate in the study process by submitting comments in response to this notice.

We will publish the results of the PARS in the **Federal Register.** It is possible that the study may validate the status quo (no routing measures) and conclude that no changes are necessary. It is also possible that the study may recommend one or more changes to enhance navigational safety and the efficiency of vessel traffic management. The recommendations may lead to future rulemakings or appropriate international agreements.

Possible Scope of the Recommendations

We are attempting to determine the scope of any safety problems associated with vessel transits in the study area. We expect that information gathered during the study will help us identify any problems and appropriate solutions. The study may recommend that we—

○ Maintain current vessel routing measures, if any;

○ Establish a Traffic Separation Scheme (TSS);

○ Create one or more precautionary areas;

○ Create one or more inshore traffic zones;

○ Create deep-draft routes;

○ Establish area(s) to be avoided;

○ Establish, disestablish, or modify anchorage grounds;

○ Establish a Regulated Navigation Area (RNA) with specific vessel operating requirements to ensure safe navigation near shallow water; and

○ Identify any other appropriate ships' routing measures to be used.

Questions

To help us conduct the port access route study, we request information that will help answer the following questions, although comments on other issues addressed in this document are also welcome. In responding to a question, please explain your reasons for each answer and follow the instructions under "Public Participation and Request for Comments" above.

1. What navigational hazards do vessels operating in the study areas face? Please describe.
2. Are there strains on safe navigation in the Bering Strait, such as increasing traffic density? If so, please describe.
3. What are the benefits and drawbacks to establishing new routing measures? Please describe.
4. What impacts, both positive and negative, would new routing measures have on the study area?
5. What costs and benefits are associated with the potential study recommendations listed above? What measures do you think are most cost effective?

This document is issued under authority of 33 U.S.C. 1223(c) and 5 U.S.C. 552.

Dated: September 24, 2010.

Christopher C. Colvin,

Rear Admiral, U.S. Coast Guard, Commander, Seventeenth Coast Guard District.

[FR Doc. 2010–28115 Filed 11–5–10; 8:45 am]

BILLING CODE 4910–15–P

ENVIRONMENTAL PROTECTION AGENCY

40 CFR Part 52

[EPA–R08–OAR–2007–1027; FRL–9223–3]

Approval and Disapproval and Promulgation of Air Quality Implementation Plans; Colorado; Revision to Definitions; Construction Permit Program; Regulation 3

AGENCY: Environmental Protection Agency (EPA).

ACTION: Proposed Rule.

SUMMARY: EPA is proposing to partially approve and partially disapprove State Implementation Plan (SIP) revisions submitted by the State of Colorado on June 20, 2003 and April 12, 2004. The intended effect of this proposal is to approve those portions of the revisions to Colorado's Regulation 3 that place restrictions on increment consumption, add innovative control technology as an alternative to BACT requirements and make other changes as described in more detail below. In addition, EPA proposes to disapprove those portions of the rule revisions that EPA determined are inconsistent with the Clean Air Act (CAA), including provisions relating to pollution control projects. This action is being taken under section 110 of the CAA.

DATES: Comments must be received on or before December 8, 2010.

ADDRESSES: Submit your comments, identified by Docket ID No. EPA–R08–OAR–2007–1027, by one of the following methods:

- *http://www.regulations.gov.* Follow the on-line instructions for submitting comments.
- *E-mail: komp.mark@epa.gov.*
- *Fax:* (303) 312–6064 (please alert the individual listed in the **FOR FURTHER INFORMATION CONTACT** if you are faxing comments).
- *Mail:* Callie Videtich, Director, Air Program, Environmental Protection Agency (EPA), Region 8, Mailcode 8P–AR, 1595 Wynkoop Street, Denver, Colorado 80202–1129.
- *Hand Delivery:* Callie Videtich, Director, Air Program, Environmental Protection Agency (EPA), Region 8, Mailcode 8P–AR, 1595 Wynkoop Street, Denver, Colorado 80202–1129. Such deliveries are only accepted Monday through Friday, 8 a.m. to 4:30 p.m., excluding Federal holidays. Special arrangements should be made for deliveries of boxed information.

Instructions: Direct your comments to Docket ID No. EPA–R08–OAR–2007–1027. EPA's policy is that all comments received will be included in the public docket without change and may be made available online at *http://www.regulations.gov*, including any personal information provided, unless the comment includes information claimed to be Confidential Business Information (CBI) or other information whose disclosure is restricted by statute. Do not submit information that you consider to be CBI or otherwise protected through *http://www.regulations.gov* or e-mail. The *http://www.regulations.gov* Web site is an "anonymous access" system, which means EPA will not know your identity or contact information unless you provide it in the body of your comment. If you send an e-mail comment directly to EPA, without going through *http://www.regulations.gov* your e-mail address will be automatically captured and included as part of the comment that is placed in the public docket and made available on the Internet. If you submit an electronic comment, EPA recommends that you include your name and other contact information in the body of your comment and with any disk or CD–ROM you submit. If EPA cannot read your comment due to technical difficulties and cannot contact you for clarification, EPA may not be able to consider your comment. Electronic files should avoid the use of special characters, any form of encryption, and be free of any defects or viruses. For additional instructions on submitting comments, go to Section I. General Information of the **SUPPLEMENTARY INFORMATION** section of this document.

Docket: All documents in the docket are listed in the *http://www.regulations.gov* index. Although listed in the index, some information is not publicly available, *e.g.,* CBI or other information whose disclosure is restricted by statute. Certain other material, such as copyrighted material, will be publicly available only in hard copy. Publicly available docket materials are available either electronically in *http://www.regulations.gov* or in hard copy at the Air Program, Environmental Protection Agency (EPA), Region 8, 1595 Wynkoop Street, Denver, Colorado 80202–1129. EPA requests that if at all possible, you contact the individual listed in the **FOR FURTHER INFORMATION CONTACT** section to view the hard copy of the docket. You may view the hard copy of the docket Monday through Friday, 8 a.m. to 4 p.m., excluding Federal holidays.

FOR FURTHER INFORMATION CONTACT: Mark Komp, Air Program, 1595 Wynkoop Street, Mailcode: 8P–AR, Denver, Colorado 80202–1129, (303) 312–6022, *komp.mark@epa.gov.*

SUPPLEMENTARY INFORMATION:

Table of Contents

I. General Information
II. Background of State's Submittals
III. EPA Analysis of State's Submittals
IV. Consideration of Section 110(l) of the CAA
V. Proposed Action
VI. Statutory and Executive Order Reviews

Definitions

For the purpose of this document, we are giving meaning to certain words or initials as follows:

(i) The words or initials *Act* or *CAA* mean or refer to the Clean Air Act, unless the context indicates otherwise.

(ii) The words *EPA, we, us* or *our* mean or refer to the United States Environmental Protection Agency.

(iii) The initials *SIP* mean or refer to State Implementation Plan.

(iv) The words *State* or Colorado mean the State of Colorado, unless the context indicates otherwise.

(v) The initials *APEN* mean or refer to Air Pollutant Emission Notice.

(vi) The initials *NSR* mean or refer to New Source Review, the initials *RACT* mean or refer to Reasonably Available Control Technology, and the initials *NAAQS* mean or refer to National Ambient Air Quality Standards.

I. General Information

A. What Should I Consider as I Prepare My Comments for EPA?

1. *Submitting CBI.* Do not submit this information to EPA through *http://regulations.gov* or e-mail. Clearly mark the part or all of the information that you claim to be CBI. For CBI information in a disk or CD–ROM that you mail to EPA, mark the outside of the disk or CD–ROM as CBI and then identify electronically within the disk or CD–ROM the specific information that is claimed as CBI. In addition to one complete version of the comment that includes information claimed as CBI, a copy of the comment that does not contain the information claimed as CBI must be submitted for inclusion in the public docket. Information so marked will not be disclosed except in accordance with procedures set forth in 40 CFR part 2.

2. *Tips for Preparing Your Comments.* When submitting comments, remember to:

a. Identify the rulemaking by docket number and other identifying information (subject heading, **Federal Register** date and page number).

b. Follow directions—The agency may ask you to respond to specific questions or organize comments by referencing a Code of Federal Regulations (CFR) part or section number.

c. Explain why you agree or disagree; suggest alternatives and substitute language for your requested changes.

d. Describe any assumptions and provide any technical information and/or data that you used.

e. If you estimate potential costs or burdens, explain how you arrived at your estimate in sufficient detail to allow for it to be reproduced.

f. Provide specific examples to illustrate your concerns, and suggest alternatives.

g. Explain your views as clearly as possible, avoiding the use of profanity or personal threats.

h. Make sure to submit your comments by the comment period deadline identified.

II. Background of State's Submittals

On June 20, 2003 and on April 12, 2004, the State of Colorado submitted formal revisions to its SIP that changed or deleted numerous definitions in Part A of the State's Regulation Number 3. Primarily, these were minor changes designed to fix ambiguous language, to make the definitions more readable or to delete obsolete or duplicative definitions. In addition to the clarifications, formatting and readability changes were made to the definition

section and a number of definitions were added or modified to reflect developments in Federal law. Also, in the April 12, 2004 submittal, the only revision to Parts A and B of Regulation 3 was a minor change to Part A, Section I.A regarding the availability of material incorporated by reference.

One modified definition was for non-road engines. In response to the 1990 CAA Amendments, Federal case law, and EPA's interpretation of the term, Colorado modified the definition of a non-road engine. The definition was also moved from the Air Pollutant Emission Notice (APEN) section of Regulation 3 (Part A, Section II) to the definition section (Part A, Section I). In addition, Colorado took steps to keep track of these sources by requiring a non-road engine rated at 1200 horsepower or greater to file a Colorado APEN. The filing of an APEN for non-road engines is stipulated by Colorado's SIP revisions to be a State-only requirement.

New definitions also included the definition of Pollution Control Projects at existing electric utility steam generating units and the use of Clean Coal Technology at these units. Colorado also revised its definitions of actual emissions and major modification to include special provisions governing physical or operational changes at electric utility steam generating units. These new definitions and revisions responded to changes in the Federal regulations arising out of the decision in the Wisconsin Electric Power Company ("WEPCO") case (*Wisconsin Electric Power Co.* v. *Reilly,* 893 F.2d 901 (7th Cir. 1990)). As a result of the WEPCO decision, EPA's NSR regulations were changed in 1992 and Colorado responded to the changes by adding these definitions to its Regulation 3.

Revisions were also submitted involving Part B of Colorado's Regulation 3. Part B describes the process air emission sources must go through to obtain a required construction permit prior to commencing operation. The State's submittals modified the exemptions from construction permitting, modified requirements for permit applicants, added restrictions on increment consumption, and added provisions regarding innovative control technology.

Colorado added language to its area classification section of Part B, Section V stating that within certain Class II areas in the State (for example, certain National Monuments that are not Class I areas), sulfur dioxide concentration increases over baseline concentrations are limited to the amount permitted in Class I areas as established under Section 163(b) of the Federal CAA. Such increases are not allowed if the Federal Land Manager determines and the State concurs that there would be an adverse impact on air quality from the sulfur dioxide concentration increase.

In Section III.D.1.c(iii), Colorado modified the exemption from construction permitting for stationary internal combustion engines. The State also limited to 75 percent the amount that a new major stationary source or major modification may consume of an applicable pollutant increment (Part B, Section VII.A.5). Sources may ask for a waiver from the limit.

Finally, the State added the ability for a pollution source to request from the State a waiver from Best Available Control Technology (BACT) requirements, if the source installed and the State approved a system of Innovative Control Technology (Part B, Section IX). The owner or operator of an emission source using this technology would receive the waiver under the condition that the source using the Innovative Control Technology agrees to achieve a level of continuous emissions reduction greater than or equivalent to BACT. The level of emission reduction must be achieved no later than four years from time of startup. At no time may the technology cause any violation of an applicable NAAQS.

III. EPA Analysis of State's Submittals

We have evaluated Colorado's June 20, 2003 and April 12, 2004 submittals regarding revisions to the State's Regulation 3, Parts A and B. We propose to approve most of the revisions but also propose to disapprove certain revisions within the June 20, 2003 submittal.

What EPA Is Proposing To Disapprove

The State revised the definition of nonroad engine (Part A Section I.B.40). The revised definition of "nonroad engine" includes State-only requirements. As noted above, Colorado designated various parts of Regulation Number 3 State Only. In Section I.B.40.c., the State said this section is designated State Only and, therefore, not Federally enforceable.

Our interpretation is that provisions designated State Only have not been submitted to us for approval since one of the key purposes of a SIP approval is to make the submitted regulations Federally enforceable. Instead, we interpret these provisions to have been submitted for informational purposes. Hence, we are not proposing to act on the portions of Regulation Number 3 designated State Only and do not discuss them further unless they impact the portions of the regulation that Colorado intended to be Federally enforceable.

The State added terms and definitions (Section I.B.70) including for a "pollution control project" (I.B.70.d) in response to EPA's 1992 WEPCO rule. Under the definition of "modification" (I.B.36), the State also added provisions related to these definitions, including for pollution control projects (I.B.36.b(iii)(G)). On June 24, 2005, the Court of Appeals for the DC Circuit vacated the Pollution Control Project portion of the WEPCO rule as well as the corresponding portion of EPA's 2002 NSR rule (*State of New York et. al.* v. *EPA,* 413 F3d3 (DC Cir. 2005)). Therefore, EPA proposes to disapprove Part A, Sections I.B.36.b(iii)(G)and I.B.70.d in Regulation 3.

EPA also proposes to disapprove the new provisions in Part A, Section IV.C. regarding emissions trading under permit caps. These new provisions apply to both construction permits and to CAA Title V operating permits. For operating permits, the provisions should not be incorporated into the Federally enforceable version of the Colorado SIP. Instead, they should be submitted separately under 40 CFR 70.4(i) as a revision of Colorado's approved operating permit program. To the extent that these new provisions apply to Prevention of Significant Deterioration (PSD) or nonattainment NSR for major sources or major modifications, they are not allowed by the regulations in 40 CFR 51.166 or 51.165. EPA provides a mechanism for establishing permit caps through plant wide applicability limitations (PALs). The provisions in IV.C for emissions trading under permit caps do not meet the requirements for PALs in 40 CFR 51.165(f) and 51.166(w). Therefore, EPA is proposing to disapprove the provisions for emissions trading under permit caps set forth in Section IV.C.

In Part A Section V.F.5, Colorado expanded the acronym Lowest Achievable Emission Rate (LAER) as one instance of a regulation-wide style change that expanded many acronyms. The revision apparently inadvertently deleted the requirement that trading transactions may not be used inconsistently with or to circumvent requirements of LAER. EPA proposes to disapprove this change because emissions trading must be consistent with other requirements of the CAA, including LAER.

Turning to Part B of Regulation 3, in Section III.D.1.c(iii), the State modified the requirements for stationary internal combustion engines to be exempt from construction permitting. Previously, all such engines were exempt if they had

actual emissions of less than five tons per year or were rated less than fifty horsepower. Under the revision, in attainment areas such engines are exempt if they have uncontrolled actual emissions of less than ten tons per year or are rated less than one hundred horsepower; thus, more engines may be exempt from construction permitting under the revision. Under section 110(l) of the CAA, EPA cannot approve a SIP revision that would interfere with any applicable requirement concerning attainment or reasonable further progress, as define in Section 171 of the CAA, or any other applicable requirement of the CAA. The State did not provide a demonstration or other analysis that the expansion of the exemption satisfies the requirements of section 110(l). EPA believes that exempting a potentially greater number of stationary engines from construction permitting may result in increased emissions of criteria pollutants such as NOx. EPA therefore proposes to disapprove the revision to Section III.D.I.c(iii).

Finally in Part B, Section IV.B.2 and Section IV.H.8 regarding operating and maintenance plans and recordkeeping formats, the revisions to these provisions have the effect of exempting a source's operating and maintenance plan for control equipment and recordkeeping format from public comment. This is contrary to the public participation requirements of 40 CFR 51.161(a), which require the State to allow public comment on information submitted by owners and operators. As set out in 40 CFR 51.160(c) and (a), the submitted information subject to public comment must include information on operation of the source as necessary for the State to determine that the construction or modification of the source will not violate the applicable portions of the control strategy or interfere with attainment or maintenance of a national standard. As the exempted information appears to fall within this requirement, EPA proposes to disapprove this revision.

What EPA Is Proposing To Approve

The State added language to its definition of actual emissions (Section I.B.1.d) for electric utility steam generating units. The State defined actual emissions by allowing the actual emissions from the unit following a physical or operational change of the unit to equal the actual annual emissions of the unit provided the operator can provide information from a five year period showing no emission increase resulting from the unit's physical or operational change. This revised definition is consistent with EPA's 1992 WEPCO rule discussed earlier in this proposed rule. Although a term used ("representative actual annual emissions") is that of the WEPCO rule, the substance of the revised definition is also consistent with current Federal regulations I 40 CFR 51.165 and 51.166, and EPA, therefore, proposes to approve the revised definition.

The State also modified its definition for commenced construction in Section I.B.13 by excluding certain construction activities from the requirement for a permit. Planning activities, site clearing and grading, ordering equipment and materials, storing of equipment, constructing personnel trailers, engineering and design changes, and geotechnical investigation do not require that a permit be issued prior to these activities. EPA proposes to approve this change in the definition of commenced construction as it is consistent with EPA guidance interpreting the equivalent term, "begin actual construction". (*See* Memorandum, "Construction Activities Prior to Issuance of a PSD Permit with Respect to 'Begin Actual Construction' " from Edward E. Reich (March 28, 1986)). As noted in that guidance, though, such activity, if undertaken prior to issuance of a permit, is at the risk of the owner or operator and would not guarantee that the permit would be forthcoming.

The revisions to Regulation 3 excluded the consideration of clean coal technology demonstration projects as a major modification when the projects do not result in an increase in the potential to emit any regulated pollutant. EPA is proposing to approve this revision since the revision is consistent with the Federal NSR regulations described at 40 CFR 51.165 and 51.166.

Earlier in this proposed rule EPA stated that we were disapproving Pollution Control Projects as defined in Section I.B.70.d of Colorado's Regulation 3. However, the remainder of the revised definitions within Part A, Section I.B.70 is consistent with EPA's 1992 WEPCO rule and with current Federal NSR regulations. These definitions include clean coal technology, electric utility steam generating unit, reactivation of very clean coal-fired electric utility steam generating unit, repowering, representative actual annual emissions, temporary clean coal technology demonstration project and wet screening operations. EPA is proposing to approve this revision since the revision is consistent with the Federal NSR regulations.

Colorado revised its fee schedule in Part A, Section VI.D by eliminating the dollar amount of the annual fee and referring the fee applicant to provisions provided in Colorado's Revised Statutes Section 25–7–114.7. Colorado also revised the filing of claims regarding confidential information and how the State elevates such claims (Part A, Section VII.). EPA believes these revisions are consistent with the requirements of the Act and therefore proposes to approve them.

Construction permit review requirements regarding reasonable available control technology (RACT) for minor sources in attainment/maintenance areas were added in Part B, Section IV.D.3.e. These requirements mirror the existing requirements in Section IV.D.2.d for minor sources in nonattainment areas. This revision strengthens the SIP by extending RACT requirements to attainment and maintenance areas and EPA therefore proposes to approve them.

As noted in Section II of this proposed rule, in Part B, Section V of Colorado's Regulation 3, the State made the restrictions on maximum allowable increases of sulfur dioxide concentrations over baseline concentrations in Class I areas also applicable to certain Class II areas, such as certain National Monuments that are not Class I areas. This change strengthens the SIP by making the more stringent Class I restrictions also applicable in the listed Class II areas and EPA therefore proposes to approve the revision.

Increment consumption restrictions were also added to Part B of Colorado's Regulation 3. In Section VIII.A.5 it specifies that no new major stationary source or major modification shall individually consume more than 75 percent of an applicable increment. These new provisions apply to PSD for major sources or major modifications EPA is proposing to approve this revision as the revision is more stringent than Federal requirements regarding increment consumption.

Finally, the State added Part B, Section IX regarding the use of innovative control technology. Major stationary sources may request from the State a waiver from BACT requirements if a system of innovative control technology is provided by the source and approved by the State. EPA is proposing to approve this revision since the revision is consistent with the Federal NSR regulations described at 40 CFR 51.166(b)(19).

IV. Consideration of Section 110(l) of the CAA

Section 110(l) of the CAA states that a SIP revision cannot be approved if the revision would interfere with any applicable requirement concerning attainment and reasonable further progress toward attainment of the NAAQS or any other applicable requirement of the Act. The Colorado SIP revisions being approved that are the subject of this document do not interfere with attainment of the NAAQS or any other applicable requirement of the Act. In regard to the June 20, 2003, and April 12, 2004 submittals, EPA proposes to approve several revisions to the State's Regulation Number 3. These portions do not relax the stringency of the Colorado SIP and in some cases strengthen it. In the case of innovative control technology, an air emission source may only use it as long as the technology provides for a level of continuous emission reduction greater than or equivalent to BACT. In the one instance in which a revised provision appears to relax the stringency of the SIP (Part B, Section III.D.1.c(iii)), EPA proposes to disapprove the revised provision. Therefore, the portions of the revisions proposed for approval satisfy section 110(l) requirements because they do not relax existing SIP requirements.

V. Proposed Action

For the reasons expressed above, we propose to approve Parts A and B of Regulation 3 as submitted on June 20, 2003 and April 12, 2004 with the following exceptions. EPA proposes to disapprove portions of Part A in Sections I.B.36(b)(iii)(G) and I.B.70(d) relating to pollution control projects due to the decision of the DC Circuit Court of Appeals, and to not act on the portion in Section I.B.40.c providing State-only requirements for nonroad engines, as we regard that portion to not be part of the submittal. EPA also proposes to disapprove the addition of Part A, Section IV.D. regarding emissions trading under permit caps. The revision to Part A, Section V.F.5 is proposed for disapproval because it inadvertently removes the provision for LAER. Furthermore, EPA proposes to disapprove the revision to the construction permit exemption in Part B, Section III.D.1.c(iii), as it does not appear to satisfy the criteria of section 110(l) of the CAA. Finally, EPA proposes to disapprove revisions to Part B, Section IV.B2 and Section IV.H.8 because the revisions prevent public comment on operating and maintenance plans and recordkeeping formats.

The State added language to its definition of actual emissions (Section I.B.1.d) for electric utility steam generating units. EPA proposes to approve the revised definition. The State also modified its definition for commenced construction in Section I.B.13 by excluding certain construction activities from the requirement for a permit. EPA proposes to approve this change in the definition of commenced construction as it is consistent with EPA guidance. The revisions to Regulation 3 excluded the consideration of clean coal technology demonstration projects as a major modification when the projects do not result in an increase in the potential to emit of any regulated pollutant. EPA is proposing to approve this revision since the revision is consistent with the Federal NSR regulations. Revised definitions within Part A, Section I.B.70, with the exception of the definition of a Pollution Control Project are consistent with EPA's 1992 WEPCO rule and with current Federal NSR regulations. EPA is proposing to approve these revised definitions since they are consistent with the Federal NSR regulations. Colorado revised its fee schedule in Part A, Section VI.D by eliminating the dollar amount of the annual fee and referring the fee applicant to provisions provided in Colorado's Revised Statutes Section 25–7–114.7. EPA believes this revision is consistent with the requirements of the Act and therefore proposes to approve the revision. In Part B, Section V of Colorado's Regulation 3, the State made the restrictions on maximum allowable increases of sulfur dioxide concentrations over baseline concentrations in Class I areas also applicable to certain Class II areas, such as certain National Monuments that are not Class I areas. Increment consumption restrictions were also added to Part B, Section VIII.A.5 of Colorado's Regulation 3. EPA proposes to approve these revisions.

The State added Part B, Section IX regarding the use of innovative control technology. Major stationary sources may request from the State a waiver from BACT requirements if a system of innovative control technology is provided by the source and approved by the State. EPA is proposing to approve this revision since the revision is consistent with the Federal NSR regulations. The remaining revisions in Part A and B of Regulation 3 submitted on June 20, 2003 and April 12, 2004 involve editorial and grammatical changes and are consistent with EPA's interpretations of the Act. We propose to approve these revisions.

VI. Statutory and Executive Order Review

Under the CAA, the Administrator is required to approve a SIP submission that complies with the provisions of the Act and applicable Federal regulations. 42 U.S.C. 7410(k); 40 CFR 52.02(a). Thus, in reviewing SIP submissions, EPA's role is to approve State choices, provided that they meet the criteria of the CAA. Accordingly, this action merely approves State law as meeting Federal requirements and does not impose additional requirements beyond those imposed by State law. For that reason, this action:

- Is not a "significant regulatory action" subject to review by the Office of Management and Budget under Executive Order 12866 (58 FR 51735, October 4, 1993);
- Does not impose an information collection burden under the provisions of the Paperwork Reduction Act (44 U.S.C. 3501 *et seq.*);
- Is certified as not having a significant economic impact on a substantial number of small entities under the Regulatory Flexibility Act (5 U.S.C. 601 *et seq.*);
- Does not contain any unfunded mandate or significantly or uniquely affect small governments, as described in the Unfunded Mandates Reform Act of 1995 (Pub. L. 104–4);
- Does not have Federalism implications as specified in Executive Order 13132 (64 FR 43255, August 10, 1999);
- Is not an economically significant regulatory action based on health or safety risks subject to Executive Order 13045 (62 FR 19885, April 23, 1997);
- Is not a significant regulatory action subject to Executive Order 13211 (66 FR 28355, May 22, 2001);
- Is not subject to requirements of Section 12(d) of the National Technology Transfer and Advancement Act of 1995 (15 U.S.C. 272 note) because application of those requirements would be inconsistent with the CAA; and
- Does not provide EPA with the discretionary authority to address, as appropriate, disproportionate human health or environmental effects, using practicable and legally permissible methods, under Executive Order 12898 (59 FR 7629, February 16, 1994).

In addition, this rule does not have Tribal implications as specified by Executive Order 13175 (65 FR 67249, November 9, 2000), because the SIP is not approved to apply in Indian country located in the State, and EPA notes that it will not impose substantial direct costs on Tribal governments or preempt Tribal law.

The Congressional Review Act, 5 U.S.C. 801 *et seq.,* as added by the Small Business Regulatory Enforcement Fairness Act of 1996, generally provides that before a rule may take effect, the agency promulgating the rule must submit a rule report, which includes a copy of the rule, to each House of the Congress and to the Comptroller General of the United States. EPA will submit a report containing this action and other required information to the U.S. Senate, the U.S. House of Representatives, and the Comptroller General of the United States prior to publication of the rule in the **Federal Register**. A major rule cannot take effect until 60 days after it is published in the **Federal Register**. This action is not a "major rule" as defined by 5 U.S.C. 804(2).

List of Subjects in 40 CFR Part 52

Environmental protection, Air pollution control, Carbon monoxide, Incorporation by reference, Intergovernmental relations, Lead, Nitrogen dioxide, Ozone, Particulate matter, Reporting and recordkeeping requirements, Sulfur oxides, Volatile organic compounds.

Dated: October 29, 2010.

Judith Wong,

Acting Deputy Regional Administrator, Region 8.

[FR Doc. 2010–28133 Filed 11–5–10; 8:45 am]

BILLING CODE 6560–50–P

ENVIRONMENTAL PROTECTION AGENCY

40 CFR Parts 86, 1033, 1039, 1042, 1045, 1054, and 1065

[EPA–HQ–OAR–2010–0142; FRL–9220–7]

RIN 2060–AO69

Revisions To In-Use Testing for Heavy-Duty Diesel Engines and Vehicles; Emissions Measurement and Instrumentation; Not-to-Exceed Emission Standards; and Technical Amendments for Off-Highway Engines

AGENCY: Environmental Protection Agency (EPA).

ACTION: Notice of proposed rulemaking.

SUMMARY: This NPRM proposes to make several revisions to EPA's mobile source emission programs and test procedures. EPA believes that each of these is minor and non-controversial in nature. Most of the proposed changes arise from the results of the collaborative test program and related technical work we conducted for the highway heavy-duty diesel in-use testing program. Most noteworthy here is the proposal to adopt a particulate matter measurement allowance for use with portable emission measurement systems. Related to this are two provisions to align the in-use program timing requirements with completion of the program as required in current regulations and the incorporation of revisions to a few technical requirements in the testing regulations based on information learned in this and one other test program. Finally, the NPRM proposes to modify a few transitional flexibilities for locomotive, recreational marine, and Tier 4 nonroad engines and incorporates a handful of minor corrections.

DATES: Written comments must be received by December 8, 2010. Request for a public hearing must be received by November 23, 2010. If we receive a request for a public hearing, we will publish information related to the timing and location of the hearing and the timing of a new deadline for public comments.

ADDRESSES: Submit your comments, identified by Docket ID No. EPA–HQ–OAR–2010–0142, by one of the following methods:

- *http://www.regulations.gov:* Follow the on-line instructions for submitting comments.
- *E-mail: a-and-r-docket@epa.gov.*
- *Fax:* (202) 566–9744.
- *Mail:* Environmental Protection Agency, Mail Code: 2822T, 1200 Pennsylvania Ave., NW., Washington, DC 20460. Please include two copies.
- *Hand Delivery:* U.S. Environmental Protection Agency, EPA Headquarters Library, EPA West Building, Room: 3334, 1301 Constitution Avenue, NW., Washington, DC. Such deliveries are only accepted during the Docket's normal hours of operation, and special arrangements should be made for deliveries of boxed information.

Instructions: Direct your comments to Docket ID No. EPA–HQ–OAR–2010–0142. EPA's policy is that all comments received will be included in the public docket without change and may be made available online at *http://www.regulations.gov,* including any personal information provided, unless the comment includes information claimed to be Confidential Business Information (CBI) or other information whose disclosure is restricted by statute. Do not submit information that you consider to be CBI or otherwise protected through *http://www.regulations.gov* or e-mail. The *http://www.regulations.gov* Web site is an "anonymous access" system, which means EPA will not know your identity or contact information unless you provide it in the body of your comment. If you send an e-mail comment directly to EPA without going through *http://www.regulations.gov* your e-mail address will be automatically captured and included as part of the comment that is placed in the public docket and made available on the Internet. If you submit an electronic comment, EPA recommends that you include your name and other contact information in the body of your comment and with any disk or CD–ROM you submit. If EPA cannot read your comment due to technical difficulties and cannot contact you for clarification, EPA may not be able to consider your comment. Electronic files should avoid the use of special characters, any form of encryption, and be free of any defects or viruses. For additional information about EPA's public docket visit the EPA Docket Center homepage at *http://www.epa.gov/oar/dockets.html.*

Docket: All documents in the docket are listed in the *http://www.regulations.gov* index. Although listed in the index, some information is not publicly available, *e.g.,* CBI or other information whose disclosure is restricted by statute. Certain other material, such as copyrighted material, will be publicly available only in hard copy. Publicly available docket materials are available either electronically in *http://www.regulations.gov* or in hard copy at the EPA Docket Center, EPA West Building, EPA Headquarters Library, Room 3334, 1301 Constitution Avenue, NW., Washington, DC. The Public Reading Room is open from 8:30 a.m. to 4:30 p.m., Monday through Friday, excluding legal holidays. The telephone number for the Public Reading Room is (202) 566–1744, and the telephone number for the Air Docket is (202) 566–1742.

FOR FURTHER INFORMATION CONTACT: Rich Wilcox, Assessment and Standards Division, Office of Transportation and Air Quality, 2000 Traverwood Drive, Ann Arbor, MI 48105; telephone number: (734) 214–4390; fax number: (734) 214–4050; email address: *laroo.chris@epa.gov.*

SUPPLEMENTARY INFORMATION:

I. General Information

In the "Rules and Regulations" section of this **Federal Register**, we are making these revisions as a direct final rule without prior proposal because we view these revisions as noncontroversial and anticipate no adverse comment.

The regulatory text for this proposed rule is included in the direct final rule and parties should review that rule for the regulatory text. If we receive no

adverse comment, we will not take further action on this proposed rule. If we receive adverse comment on the rule or any portions of the rule, we will withdraw the direct final rule or the portion of the rule that received adverse comment. We will address all public comments in a subsequent final rule based on this proposed rule. We will not institute a second comment period on this action. Any parties interested in commenting must do so at this time.

II. Does this action apply to me?

This action will affect companies that manufacture and certify heavy-duty diesel engines and vehicles for use on the highway.

Category	NAICS code [a]	Examples of potentially affected entities
Industry	336112 336120	Engine and Truck Manufacturers.
Industry	333112	Manufacturers of lawn and garden tractors.
Industry	333618	Manufacturers of new engines.
Industry	482110, 482111, 482112	Railroad owners and operators.
Industry	811112, 811198	Independent commercial importers of vehicles and parts.

[a] North American Industry Classification System (NAICS).

To determine whether particular activities may be affected by this action, you should carefully examine the regulations. You may direct questions regarding the applicability of this action as noted in **FOR FURTHER INFORMATION CONTACT**.

III. What should I consider as I prepare my comments for EPA?

A. Submitting CBI. Do not submit this information to EPA through *http://www.regulations.gov* or e-mail. Clearly mark the part or all of the information that you claim to be CBI. For CBI information in a disk or CD–ROM that you mail to EPA, mark the outside of the disk or CD–ROM as CBI and then identify electronically within the disk or CD–ROM the specific information that is claimed as CBI. In addition to one complete version of the comment that includes information claimed as CBI, a copy of the comment that does not contain the information claimed as CBI must be submitted for inclusion in the public docket. Information so marked will not be disclosed except in accordance with procedures set forth in 40 CFR Part 2.

B. *Tips for Preparing Your Comments.* When submitting comments, remember to:

- Identify the rulemaking by docket number and other identifying information (subject heading, **Federal Register** date and page number).
- Follow directions—The agency may ask you to respond to specific questions or organize comments by referencing a Code of Federal Regulations (CFR) part or section number.
- Explain why you agree or disagree; suggest alternatives and substitute language for your requested changes.
- Describe any assumptions and provide any technical information and/or data that you used.
- If you estimate potential costs or burdens, explain how you arrived at your estimate in sufficient detail to allow for it to be reproduced.
- Provide specific examples to illustrate your concerns, and suggest alternatives.
- Explain your views as clearly as possible, avoiding the use of profanity or personal threats.
- Make sure to submit your comments by the comment period deadline identified.

IV. Details of the Proposed Rule

A. Revision of 40 CFR Part 86 Subpart T to Revise the In-Use Testing Program for Heavy-Duty Diesel Engines

1. Background

The manufacturer-run, in-use testing program for heavy-duty diesel vehicles that are used on the highway was promulgated in June 2005 to monitor the emissions performance of the engines used in 2007 and later model year vehicles when operated under a wide range of real world driving conditions.[1] The program is specifically intended to monitor compliance with the applicable Not-to-Exceed (NTE) exhaust emission standards for non-methane hydrocarbons (NMHC), carbon monoxide (CO), oxides of nitrogen (NO_X), and particulate matter (PM). It requires each manufacturer of heavy-duty highway diesel engines to assess the in-use exhaust emissions from their engines using onboard, portable emission measurement systems (PEMS) during typical operation while on the road. The PEMS unit must meet the requirements of 40 CFR 1065 Subpart J.

The program was amended in March 2008 to delay some of the implementation dates and reporting deadlines and to adopt final PEMS measurement "accuracy" margins for gaseous emissions (*i.e.,* NMHC, CO, and NO_X).[2] The development of PEMS accuracy margins are further described below.

The in-use testing program began with a mandatory two-year pilot program for gaseous emissions in calendar years 2005 and 2006. The program also included a pilot program for PM emissions in calendar years 2007 and 2008. The programs are fully enforceable after their respective pilot program ends, *i.e.,* the 2007 calendar year for gaseous emissions and the 2009 calendar year for PM emissions. Fully enforceable means that engines found not compliant after this time frame could be subject to a compliance action.

The in-use testing program is based on the NTE emission standards. For the purposes of the in-use testing program, EPA established a vehicle pass/fail criterion for each pollutant that compares a vehicle's measured in-use emissions to a corresponding numerical compliance limit, *i.e.,* NTE threshold. The NTE threshold for each pollutant is the sum of the NTE standard, any in-use compliance testing margin that is already allowed by the regulations, and a new emission measurement accuracy margin associated with the use of PEMS. The PEMS accuracy margin is the difference between the emission measurement "error" for the portable instrument and the measurement "error" for "laboratory grade" instruments that are used to test vehicles or engines on a dynamometer in a laboratory setting. This accuracy margin is expressed in the same numerical terms as the applicable NTE emission standards, *i.e.,* grams of pollutant per brake horsepower-hour (g/bhp-hr).

When the in-use testing program was first established in June of 2005, there was uncertainty regarding what specific

[1] *See* "Control of Emissions of Air Pollution From New Motor Vehicles: In-Use Testing for Heavy-Duty Diesel Engines and Vehicles, 70 FR 34594 (June 14, 2005).

[2] *See* "Control of Emissions of Air Pollution From New Motor Vehicles; Emission Measurement Accuracy Margins for Portable Emission Measurement Systems and Program Revisions, 73 FR 13441 (March 13, 2008).

accuracy margins should be used in the in-use testing program, since the portable measurement devices that were expected to be used in the program had not been rigorously tested at that time. As a result, we originally promulgated interim accuracy margins for use in the pilot programs.[3] These interim values were believed to represent an upper bound of the possible instrumentation variability based on our experience with portable and laboratory instruments and test methods. Subsequently, we adopted final values for gaseous pollutants based on the cooperative research program described below.[4]

In May of 2005, shortly before the in-use test program was promulgated, EPA entered into a memorandum of agreement (MOA) with the California Air Resources Board (CARB) and the manufacturers of heavy-duty highway diesel engines (through the Engine Manufacturers Association (EMA)) to develop "data driven" emission measurement allowances through a comprehensive research, development, and demonstration program for the fully enforceable programs.[5] The overall test program was designed to be completed in two phases. The first phase addressed gaseous emission accuracy margins and the second phase addressed the PM emission accuracy margin. The remainder of this discussion focuses on the final PEMS accuracy measurement for PM, since the final margins for gaseous emissions have already been adopted.

The MOA and the June 2005 final rulemaking addressed the consequences of failing to complete the accuracy margin development work in time for the scheduled start of the PM enforceable program.[6] [7] Two provisions in these documents are most relevant to today's rule. The first provision addresses short term delays in receiving the final accuracy margins. Specifically, for each month the accuracy margins are delayed beyond the agreed upon dates, then the affected enforceable program would be delayed by the same number of months up to three months. The second provision, which is most relevant to today's action, addresses delays in excess of three months. In particular, if the final accuracy margin and documentation were delayed more than three months from November 1, 2008, then the affected PM enforceable program would be placed in abeyance for a year and the respective pilot program would be continued for calendar year 2009 using the interim allowance. If necessary, this programmatic adjustment would be repeated in subsequent years until the final PM accuracy margin was identified.

2. Particulate Matter Emission Measurement Margin for Portable Emission Measurement Systems

The MOA described above called for development of a comprehensive test plan for determining the final emission measurement accuracy margins for the manufacturer-run, in-use testing program.[8] Generally, the detailed plan included a methodology that called for: (1) Comprehensive engine testing in the laboratory to assess the agreed upon sources of possible error and the resultant measurement variability between the PEMS and laboratory instrumentation and measurement methods; (2) the effects of environmental conditions on PEMS error and the variability in key engine parameters supplied by the engine's electronic controls to the PEMS; (3) the development of a statistically-based computer model to simulate effects of all sources of error on the final measurement accuracy margin; and (4) validation of the simulation model results and resulting accuracy margin against data generated through actual in-use field testing using simultaneous on-vehicle measurements from a mobile emissions laboratory (*i.e.,* laboratory-grade instruments mounted inside a trailer) and a PEMS unit. This validation step is important because it provides confidence that the simulation model results reflect reasonable accuracy margin. If the two methods do not statistically agree, then there may be possible errors in the simulation model, the in-use mobile emissions testing results, or both. The test plan also contained the statistically-based algorithms for calculating the data-driven margin for PM from in-use data.

After the simulation modeling results were completed, the test plan called for the final accuracy margin to be determined by the following generalized process. First, select the PEMS with the lowest or minimum positive value. Second, select the calculation method that has the lowest or minimum positive value. Third, and finally, use the results from that method to determine the final measurement accuracy margin.

The cooperative test program for PM as described in the MOA is complete and a final report has been issued.[9] Two PEMS units from different manufacturers were evaluated in the validation phase. When the predicted results from the model simulations for one of the PEMS units was compared to the mobile emissions laboratory results, the model did not validate for PM. It was determined from analyzing the results, that the PEMS exhibited a negative bias that was more pronounced during the validation tests when compared to the model development tests. The model did validate for the PEMS from the other manufacturer. Based on these results for that instrument, EPA, ARB, and EMA selected the final measurement allowance value and agreed to conclude the test program. We are proposing to adopt the resultant final emission measurement accuracy margin of 0.006 g/bhp-hr for PM. The derivation of this value is documented in the final report referenced above.

3. Delaying the Enforceable PM Program from 2009 to 2011

As described above, the PM accuracy margin test program has been completed. However due to unexpected delays in beginning the test program, issues in the development of PM PEMS technology, and other challenges in conducting the work, the program took two years longer than originally anticipated. Accordingly, in-use test program regulations require that the first two years of the previously adopted enforceable program, which was originally scheduled for the calendar

[3] The interim additive accuracy margins for the pilot programs are: NMHC = 0.17 g/bhp-hr, NO_X = 0.50 g/bhp-hr, CO = 0.60 g/bhp-hr, and PM = 0.10 g/bhp-hr.

[4] The final additive accuracy margins for the enforceable gaseous programs are: NMHC = 0.01 g/bhp-hr, NO_X = 0.15 g/bhp-hr, and CO = 0.25 g/bhp-hr.

[5] *See* "Memorandum of Agreement, Program to Develop Emission Measurement Accuracy Margins for Heavy-Duty In-Use Testing," dated May 2005. A copy of the memorandum is available in the public docket for this rule and at the EPA/OTAQ Web site (*http://www.epa.gov/otaq/hd-hwy.htm*).

[6] *See* "Memorandum of Agreement, Program to Develop Emission Measurement Accuracy Margins for Heavy-Duty In-Use Testing," dated May 2005. A copy of the memorandum is available in the public docket for this rule and at the EPA/OTAQ Web site (*http://www.epa.gov/otaq/hd-hwy.htm*).

[7] *See* "Control of Emissions of Air Pollution From New Motor Vehicles: In-Use Testing for Heavy-Duty Diesel Engines and Vehicles," 70 FR 34624 (June 14, 2005).

[8] *See* "Test Plan to Determine PEMS Measurement Allowance for the PM Emissions Regulated under the Manufacturer-Run Heavy-Duty Diesel Engine In-Use Testing Program, for the U.S. Environmental Protection Agency, California Air Resources Board, and Engine Manufacturers Association", dated November 11, 2008 (published by EPA August 2010), EPA report number: EPA–420–B–10–901. A copy of the report is available in the public docket for this rule and at the EPA/OTAQ Web site (*http://www.epa.gov/otaq/hd-hwy.htm*).

[9] *See* "PM PEMS Measurement Allowance Determination: Final Report," U.S. Environmental Protection Agency, June 2010 (published by EPA August 2010), EPA report number: EPA–420–R–10–902. A copy of the report is available in the public docket for this rule and at the EPA/OTAQ Web site (*http://www.epa.gov/otaq.hd-hwy.htm*).

year 2009, be placed into abeyance for two years. Hence, we are proposing that the enforceable PM program will now begin in 2011 calendar year.

As already noted, the current in-use test program regulations require that the PM pilot program, which began in the 2007 calendar year, be continued for an additional two years through calendar year 2010. This would result in four years of pilot testing for PM. However, our current assessment shows that such extended pilot program testing is unnecessary as described below.

The intent of the original two-year pilot program for PM was to make certain that engine manufacturers had adequate real-world operational experience, *i.e.,* from recruiting vehicles to submitting test reports to EPA, to ensure a successful start of the subsequent fully enforceable program.[10] Manufacturers have reached the May 31, 2010 reporting deadline for the 2007 calendar year PM pilot program. Also, engine manufacturers have completed a substantial amount of in-use testing for gaseous pollutants, *i.e.,* NMHC, CO, and NO_X. More specifically, two years of gaseous emissions pilot testing (2005 and 2006 calendar years) and two years of the fully enforceable program (2007 and 2008 calendar years) for these pollutants have been completed. Gaseous pollutant in-use testing is in many ways complementary to PM in-use testing because nearly all aspects of the test regime are the same. Even certain parts of the portable emission measurement system instrumentation are used to measure both types of pollutants. Engine manufacturers, therefore, have already had a substantial amount of experience conducting all aspects of in-use testing. As a result, we have concluded that the original intent for conducting the PM pilot program will be achieved by retaining the requirement for two years of pilot testing rather than expanding it to four years. Therefore, we are proposing not to extend the PM pilot testing program beyond its initial requirement of two years of testing.

As a result of the proposal to delay the enforceable program for PM until the 2011 calendar year and the proposal not to extend the two-year pilot program, we need to reassess the schedule for conducting the required tests for the pilot program. Two considerations are especially important here. First, there is no apparent advantage to require that engine manufacturers conduct testing over a single, consecutive two-year period, *e.g.,* calendar years 2007 and 2008. Second, there may be a benefit to allowing each manufacturer to decide which two years out of the four possible years to conduct its PM pilot testing. This is because the PM PEMS technology has continued to improve and mature as a result of the ongoing cooperative test program for developing the final PM accuracy margin. As result, a manufacturer may benefit from an additional flexibility in selecting when to complete the PM pilot program in order to gain experience with PEMS that will be more like the instrumentation they may use for the proposed 2011 enforceable program. Therefore, we are proposing to allow each manufacturer to report test results in any two out of the potentially four calendar years for completing its testing obligations under the PM pilot program.

Finally, we previously designated the engine families for the 2007, 2008, and 2009 calendar years that each engine manufacturer must test, and we have recently designated engine families for the 2010 calendar year program. Given the new flexibility in choosing which two of the four years to fulfill their testing obligations for the PM pilot program, we are proposing that each engine manufacturer must notify EPA by letter to the Agency's designated compliance officer to explicitly identify both: (1) The designated calendar year(s) where in-use PM pilot program testing will be forgone, and (2) the designated calendar year(s) when their obligations for PM pilot testing will be completed. We are proposing that this notification must be provided to the Agency by January 7, 2011 and must be quickly updated if planned testing changes for any calendar year.

4. Removing the PM Accuracy Test Program From the Regulations

We are taking this opportunity to delete the references in § 86.1935 that pertain to the final report for PM emission accuracy margin and the consequences that would ensue if the report was delayed beyond certain dates. These provisions are no longer needed because accuracy margin for PM pollutants are being promulgated in this Direct Final Rule. This will result in removal of § 86.1935 from the regulations in its entirety and any references made to § 86.1935 throughout 40 CFR part 86.

B. Revisions to 40 CFR 1033.150 To Allow the Use of Earlier Model Year Switch Engines With Equivalent Emission Controls

Section 1033.150(e) allows the use of certified 2008 and later nonroad engines in switch locomotives. We are proposing to extend the allowance to include nonroad engines produced in model years before 2008 as long as they were certified to the same standards as 2008 engines. This extension will not have any emissions impact since the engines will be required to have the same emission controls with or without the revisions.

C. Revision of 40 CFR Part 1065 To Clarify the Requirements for PM PEMS Testing

We are taking this opportunity to propose minor technical amendments to 40 CFR part 1065 that are mostly related to the requirements for in-use PM instrumentation and that arose from knowledge gained during the accuracy margin laboratory and field work mentioned in Section A. above. The proposed changes are specified in the following paragraph. The reasons for these proposed revisions are detailed in a separate document.[11] The proposed amendments have no effect on the stringency of the regulations, but simply improve and increase testing efficiency, allow new measurement techniques, or otherwise clarify the regulatory requirements.

The proposed amendments are as follows:

1. We propose to remove the requirement to control dilution air temperature for in-use testing;
2. We propose adding an in-use filter face velocity specification;
3. We propose adding an in-use filter face temperature specification;
4. We propose specifying that there is no requirement for control of humidity control for in-situ PM analyzers;
5. We propose allowing the use of a fixed molar mass for the dilute exhaust mixture for field testing;
6. We propose deleting the frequency and rise/fall time specs for inertial batch PM analyzers;
7. We propose adding a statement that field testing applies at any ambient temperature, pressure and humidity, unless otherwise specified in the standard setting part (*e.g.,* 40 CFR part 86 for heavy-duty highway engines);
8. We propose adding language to state that EPA approves of electrostatic

[10] *See* "Control of Emissions of Air Pollution From New Motor Vehicles: In-Use Testing for Heavy-Duty Diesel Engines and Vehicles, 70 FR 34614 (June 14, 2005).

[11] *See* "List of Part 1065 Changes Resulting from HDIUT PM MA Program", dated June 2010. A copy of this list is available in the public docket for this rule.

deposition technique for PM collection and that the technique must meet 95% collection efficiency, as validated by the manufacturer;

9. We propose excluding PM PEMS from the system-response and updating-recording verification requirements;

10. We propose clarifying when an HC contamination check of the sampling system should take place;

11. We propose allowing the use of a PM loss correction to account for PM loss in the inertial balance, including the sample handling system for in-use testing only;

12. We propose making a clarification on how to handle positive displacement pump (PDP) pressure calibrations at maximum pressure;

13. We propose allowing a restart of the hot portion of the transient test if the hot start was void;

14. We propose making some language changes to make the language used more consistent throughout the document; and

15. We propose correcting typographical errors.

D. Revision of 40 CFR 1065.140 To Allow the Use of Partial Flow Dilution Systems for Laboratory Transient Test Cycle PM Measurement

We are proposing to make changes to 40 CFR part 1065.140(d) to allow the use of partial flow sampling systems for measurement of PM during transient test cycles for laboratory testing.

PM measurement has been traditionally performed using a full flow dilution tunnel where the entire amount of engine exhaust gas is collected and made available for sampling. With this sampling method, commonly referred to as a constant volume sampler (CVS), the size of the dilution tunnel depends on the exhaust gas volume, thus the greater the volume of exhaust gas emitted from the engine, the larger the dilution tunnel must be. As an alternative, a partial-flow dilution tunnel allows sampling of part of the total exhaust flow, which reduces the size of the sampling system. One of the drawbacks to partial flow sampling systems in the past was that the flow controllers did not have a fast enough response time to accurately respond to the changing exhaust flow rates during a transient cycle. Thus partial flow sampling systems were only allowed for use during steady-state cycle testing. Recent advancements in the development of fast response flow control systems, along with the advancement in the understanding of PM formation characteristics have made partial flow sampling systems a viable technology for use in transient applications when compared to the CVS reference method.

We currently allow the use of partial flow sampling systems for measurement of PM for steady-state and ramped modal cycle (RMC) testing and have put specifications in place in 40 CFR 1065.140(e) with respect to dilution air temperature, minimum dilution ratio, filter face temperature, and residence time to control PM formation. These specifications have further worked to improve the accuracy of partial flow systems when compared to the CVS.

We initially proposed this allowance in the locomotive and compression-ignition marine engines less than 30 liters per cylinder NPRM, but did not finalize it due to concerns over the viability of partial flow systems in transient applications.[12] [13] Since promulgating that rule, EPA has worked with industry to gain a better understanding of partial flow systems and the improvements that have been made over the past decade. We have also reviewed additional data supplied by engine and partial flow system equipment manufacturers showing comparisons between the traditional CVS and partial flow systems for PM measurement.[14] These data have shown that partial flow measurement of PM is a viable tool for measurement in transient applications and these systems can meet the dilution parameter control requirements in 40 CFR 1065.140 as well as the flow rate linearity requirements in 40 CFR 1065.307, Table 1, and the validation of proportional flow control requirement in 40 CFR 1065.545. Further, correlation testing involving partial flow systems and CVS based systems has shown that the partial flow method is equivalent to the CVS method via t- and f-test analysis. In light of these recent disclosures, EPA is proposing to allow the use of this measurement technique.[15]

[12] *See* "Proposed Rule: Control of Emissions of Air Pollution from Locomotives and Marine Compression-Ignition Engines Less than 30 Liters per Cylinder", 72 FR 34594 (April 3, 2007).

[13] *See* "Final Rule: Control of Emissions of Air Pollution from Locomotives and Marine Compression-Ignition Engines Less Than 30 Liters per Cylinder", 73 FR (May 6, 2008).

[14] *See* "Sierra Instruments Model BG–3 vs. CVS Multiple Engine Correlation Study", dated November 2009. A copy of this list is available in the public docket for this rule.

[15] Compliance evaluation when conducted by the Administrator, independent of the method for dilution, become the official results. Manufacturers should be prepared to demonstrate compliance with the full flow CVS even if initial certification was conducted using a partial flow dilution system. EPA will continue to use the CVS-based PM measurement method for our own compliance testing regardless of what method the manufacturer used to certify the engine.

E. Revision of 40 CFR 86.1370 To Clarify How To Handle NTE Events During Regeneration

We are proposing to further define how to handle regeneration events that occur during real world in-use NTE tests. The current text as it exists in 40 CFR 86.1370–2007(d)(2) has caused confusion with respect to determination of the NTE minimum averaging period.

This proposed revision would establish a new method to calculate the minimum averaging period. The intent here is to minimize the number of voided NTE events due to regeneration for systems that undergo frequent and/or infrequent regeneration, while ensuring that the NTE averaging time is appropriate based on the regeneration time.

The regeneration duty cycle fraction over the course of the entire test day can be determined by dividing the mean time of the complete regeneration events (state 2) by the sum of the mean time of the non-regeneration events (state 0) and the mean time of the complete regeneration segments including time in those segments where regeneration is pending (states 1 and 2).

To determine whether an NTE that includes a regeneration event is valid, the minimum average time is determined by summing the portion of the NTE event that occurs during regeneration and dividing by the fraction of time over the entire sampling period, *i.e.,* shift-day, that regeneration occurred for complete regeneration events. This latter term is referred to as the regeneration fraction. If the duration of the NTE is greater than or equal to this minimum average time, then the NTE event is valid.[16] For example, if an NTE event was 125 seconds long and contained 25 seconds of regeneration, and regeneration fraction was 0.24, the minimum averaging time for this NTE event is 104 seconds (25/0.24 = 104). In this example, the NTE event would be valid.

F. Revision of 40 CFR 1065.915 To Allow the Use of ECM Fuel Rate To Determine NTE Mass Emission Rate

We are proposing to allow the use of fuel rate data that is available from the engine's electronic control module (ECM) along with other information, including the CO_2, CO, and hydrocarbon emissions to calculate the requisite exhaust flow rate for mass emission rate determination. We believe that all large horsepower nonroad diesel engines will

[16] *See,* Letter from EMA to EPA, "Treatment of Overlapping NTE and Regeneration Events (July 29, 2009). A copy of the report is available in the public docket for this rule.

be equipped with ECMs that report fuel flow within the time frame proposed for implementation of the in-use testing program. The ECM fuel flow rate-based methodology currently requires prior EPA approval under 40 CFR 1065.915(d)(5)(iv). This pre-approval requirement is based on past concerns with respect to the accuracy of the ECM broadcast fuel flow rate when calculating brake-specific emission results in the absence of an exhaust flow measurement. However, more recent information from the cooperative in-use emission measurement allowance program for PEMS showed that emission calculations incorporating the ECM fuel rate yielded results comparable to those using approved calculation methodology.[17] Based on that study and the inclusion of ECM derived BSFC in the determination of the accuracy margin, we are proposing to eliminate the requirement that a manufacturer must have EPA approval to use this method to determine exhaust flow rates via an amendment to 40 CFR 1065.915.

G. Revision of 40 CFR 1045.145 To Extend the Notification Deadline for Small-Volume Manufacturers of Marine SI Engines

Our current regulations for sterndrive/inboard marine SI engines allow for delayed implementation of emission standards for small-volume manufacturers making sterndrive/inboard marine SI engines (*see* § 1045.145(a)). One requirement related to this delay is for the manufacturer to notify EPA before the standards take effect. However, we have learned that there are some small-volume engine manufacturers that have not yet learned about the new emission standards. We believe it is appropriate to extend the notification deadline for these manufacturers by one year to allow for further communications related to the new requirements. To accommodate the proposed later deadline, we are also proposing to add language in the regulation to clarify that manufacturers need to notify EPA before introducing such engines into U.S. commerce for them to have a valid temporary exemption. These proposed revisions address the logistical challenges related to implementing the new standards without changing the effective implementation schedule of the original rule.

These proposed revisions address the logistical challenges related to implementing the new standards without changing the effective implementation schedule of the original rule.

H. Revision of 40 CFR 1039.102 To Enable Phase Out of Tier 3 Diesel Engines

When creating 40 CFR 1039.102 (69 FR 39213, June 29, 2004), we included provisions intended to allow engine manufacturers to use emission credits to continue producing a small number Tier 3 nonroad diesel engines after the Tier 4 standards began to apply. However, we now realize that the provisions may not work as intended because the Tier 4 averaging programs inadvertently do not allow manufacturers to show compliance with the applicable 0.19 g/kW-hr NMHC standard using credits. In today's rulemaking, we are proposing to amend this section to allow manufacturers to use credits to show compliance with alternate NO_x + HC standards. The alternate NO_X + NMHC standards for each power category would be equal to the numerical value of the applicable alternate NO_X standard of § 1039.102(e)(1) or (2) plus 0.10 g/kW-hr. Engines certified to these NO_X + NMHC standards may not generate emission credits. Since additional 0.10 g/kW-hr for the combined standard is less than the otherwise applicable NMHC standard, there would be a small environmental benefit when manufacturers choose to certify to the alternate standards.

I. Revision of 40 CFR 1039.625 To Revise TPEM Provisions for Special High-Altitude Equipment

We have been made aware of a number of unique challenges involved in implementing Tier 4 requirements for certain specialized high-altitude equipment. In setting the Tier 4 standards in 2004, we anticipated that typical engineering challenges would arise in redesigning machines to use the new engines, and we restructured our transition program for equipment manufacturers, first established in the Tier 2/Tier 3 rule, to help manufacturers deal with these challenges. This important flexibility program has been highly successful. We do feel that a minor adjustment is warranted for the specialized high-altitude equipment identified.

This equipment is designed for use on snow and, for at least some of its operating life, at elevations more than 9,000 feet above sea level. The applications are ski area snow groomers, both alpine and cross-country, and personnel transporters used in search and rescue operations, and maintenance of utility lines and towers.

One manufacturer of this equipment, has identified a number of technical issues specific to the equipment, including:[18]

1. *Reliability:* The performance of the new engine and aftertreatment components is untested at high altitudes in winter conditions. Engine operating temperatures may be elevated at higher altitudes with potential impacts on engine performance and reliability;

2. *Cold Starting:* Diesel cold starting is aggravated at high altitudes due to lower oxygen availability. No-start situations for high-altitude equipment may be life threatening;

3. *Engine power:* The degree to which a Tier 4 engine's power is reduced, *i.e.,* derated, with increasing altitude is unproven. Excessive derate would hinder the vehicles' snow grooming function and performance;

4. *Particulate filter regeneration:* These machines operate for long periods traveling downhill with little engine load. Regeneration must be validated;

5. *Functioning in extreme conditions:* Snow groomers must reliability push and grind snow and ice in extreme conditions, including while moving up and down steep grades; and

6. *Weight:* The added weight of Tier 4 aftertreatment and cooling components will directly affect ground pressure, which can hamper a snow groomer's essential function.

In identifying these issues, the manufacturer stated that it expects two, possibly three, winters of prototype testing are needed to work through these issues and believes that flexibility in the use of exemptions provided by the Tier 4 transition program is key to enabling this. We have evaluated the technical issues, and have concluded there are likely to be some unique challenges in implementing Tier 4 for high-altitude equipment of this type.

In response, to provide modest but meaningful additional flexibility, we are proposing to remove the single engine family restriction for the use of the small volume provision allowing 700 exempted units over seven years. This proposed additional flexibility would only apply for manufacturers of specialized high-altitude equipment (designed to commonly operate above 9,000 feet), and only in the first two model years of Tier 4 standards.

[17] *See* "Determination of PEMS Measurement Allowances for Gaseous Emissions Regulated under the Heavy-Duty Diesel Engine In-Use Testing Program, dated April, 2007. A copy of the report is available in the public docket for this rule and at the EPA/OTAQ Web site (*http://www.epa.gov/otaq/hd-hwy.htm*).

[18] E-mail from Jean-Claude Perreault, Prinoth Ltd, to Byron Bunker, U.S. EPA, "Prinoth technical information", June 8, 2010.

Afterward, the single engine family restriction would apply. In no case would the 700 unit maximum over seven years be exceeded.

We do not expect that this change will result in a significant negative impact on any engine or equipment manufacturers. Engine manufacturers are already expecting to produce some Tier 4 engines for the transition program, and the number of additional exempted engines will be relatively small. Equipment manufacturers can either take advantage of this change, or are already able to exempt the same number of affected machines for several years under the existing transition program provisions.

We also believe the impact of this proposed modification on Tier 4 environmental benefits will be negligible, given that: (1) It only applies to the small volume portion of the transition program, (2) the total U.S. annual sales of specialized high-altitude equipment is, at most, a few hundred, (3) much of this equipment operates for only a part of the year, (4) the modification only applies in the first two Tier 4 model years, and does not increase the overall exemption limit of 700 over seven years.

J. Revision of 40 CFR 1054.101 To Clarify Prohibitions Related to Handheld Small SI Engines Installed in Nonhandheld Equipment

The existing regulations related to emission standards for nonroad spark-ignition engines below 19 kW specifically prohibit the sale of nonhandheld equipment equipped with handheld engines. The regulations in § 1054.101 state that handheld engines may not be installed in nonhandheld equipment, but the regulatory text does not state that this is prohibited under § 1068.101 or identify which penalty provisions apply. In this rule we are proposing to add a statement to § 1054.101(e) to describe how this action violates the prohibited acts identified in § 1068.101, consistent with the regulations under 40 CFR part 90.

K. Revision of 40 CFR 1042 Appendix II To Correct Time Weighting at Mode for Engines Certifying to the E2 RMC Cycle

The existing regulations contain an error in the time at mode for each steady-state point when certifying an engine to the E2 ramped modal cycle (RMC). When the E2 RMC cycle was generated, the times at mode were not correct based on the weighting of the discrete-mode cycle. In this notice we are proposing to correct the time at mode for all four steady-state portions of the E2 RMC cycle to correspond with the mode weighting for the discrete-mode test.

V. Statutory and Executive Order Reviews

A. Executive Order 12866: Regulatory Planning and Review

This proposed action is not a "significant regulatory action" under the terms of Executive Order (EO) 12866 (58 FR 51735, October 4, 1993) and is therefore not subject to review under the EO. EPA is taking direct final action on several revisions to EPA's mobile source emission programs standards and test procedures. This proposed rule merely contains several minor and noncontroversial technical amendments to EPA's mobile source emission programs as described in the Summary and Section IV. Details of the Proposed Rule.

B. Paperwork Reduction Act

This proposed action does not impose an new information collection burden under the provisions of the Paperwork Reduction Act, 44 U.S.C. 3501 *et seq.* Burden is defined at 5 CFR 1320.3(b). It merely contains several minor and noncontroversial technical amendments to EPA's mobile source emission programs as described in the Summary and Section IV. Details of the Proposed Rule. Therefore, there are no new paperwork requirements associated with this proposed rule.

C. Regulatory Flexibility Act

The Regulatory Flexibility Act (RFA) generally requires an agency to prepare a regulatory flexibility analysis of any rule subject to notice and comment rulemaking requirements under the Administrative Procedure Act or any other statute unless the agency certifies that the rule will not have a significant economic impact on a substantial number of small entities. Small entities include small businesses, small organizations, and small governmental jurisdictions.

For purposes of assessing the impacts of this proposed rule on small entities, a small entity is defined as: (1) A small business that meet the definition for business based on SBA size standards at 13 CFR 121.201; (2) a small governmental jurisdiction that is a government of a city, county, town, school district or special district with a population of less than 50,000; and (3) a small organization that is any not-for-profit enterprise which is independently owned and operated and is not dominant in its field.

After considering the economic impacts of today's proposed rule on small entities, I certify that this action will not have a significant economic impact on a substantial number of small entities. This proposed rule will not impose any new requirements on small entities.

EPA has determined that it is not necessary to prepare a regulatory flexibility analysis in connection with this proposed rule. It merely contains several minor and noncontroversial technical amendments to EPA's mobile source emission programs as described in the Summary and Section IV. Details of the Proposed Rule. We have, therefore, concluded that today's proposed rule will not affect the regulatory burden for all small entities and will not have a significant economic impact on a substantial number of small entities.

D. Unfunded Mandates Reform Act

This proposed rule contains no federal mandates for state, local, or tribal governments as defined by the provisions of Title II of the UMRA. The proposed rule imposes no enforceable duties on any of these governmental entities. Nothing in the proposed rule would significantly or uniquely affect small governments. EPA has determined that this proposed rule contains no federal mandates that may result in expenditures of more than $100 million to the private sector in any single year. It merely contains several minor and noncontroversial technical amendments to EPA's mobile source emission programs as described in the Summary and Section IV. Details of the Proposed Rule. We have, therefore, concluded that today's proposed rule will not effect the regulatory burden for all small entities and will not have a significant economic impact on a substantial number of small entities. See the direct final rule EPA has published in the "Rules and Regulations" section of today's **Federal Register** for a more extensive discussion of UMRA policy.

E. Executive Order 13132: Federalism

This proposed rule does not have federalism implications. It will not have substantial direct effects on the States, on the relationship between the national government and the States, or on the distribution of power and responsibilities among the various levels of government, as specified in Executive Order 13132. This proposed rule merely contains several minor and noncontroversial technical amendments to EPA's mobile source emission programs as described in the Summary and Section IV. Details of the Proposed Rule. We have, therefore, concluded that today's proposed rule will not affect

the regulatory burden for all small entities and will not have a significant economic impact on a substantial number of small entities. *See* the direct final rule EPA has published in the "Rules and Regulations" section of today's **Federal Register** for a more extensive discussion of Executive Order 13132.

F. Executive Order 13175: Consultation and Coordination With Indian Tribal Governments

This proposed rule does not have tribal implications. It will not have substantial direct effects on tribal governments, on the relationship between the Federal government and Indian tribes, or on the distribution of power and responsibilities between the Federal government and Indian tribes, as specified in Executive Order 13175. This proposed rule does not uniquely affect the communities of Indian Tribal Governments. Further, no circumstances specific to such communities exist that would cause an impact on these communities beyond those discussed in the other sections of this rule. This proposed rule merely contains several minor and noncontroversial technical amendments to EPA's mobile source emission programs as described in the Summary and Section IV. Details of the Proposed Rule. We have, therefore, concluded that today's proposed rule will not affect the regulatory burden for all small entities and will not have a significant economic impact on a substantial number of small entities. Thus, Executive Order 13175 does not apply to this rule. See the direct final rule EPA has published in the "Rules and Regulations" section of today's **Federal Register** for a more extensive discussion of Executive Order 13132.

G. Executive Order 13045: Protection of Children From Environmental Health and Safety Risks

This proposed rule is not subject to the Executive Order because it is not economically significant, and does not involve decisions on environmental health or safety risks that may disproportionately affect children. See the direct final rule EPA has published in the "Rules and Regulations" section of today's **Federal Register** for a more extensive discussion of Executive Order 13045.

H. Executive Order 13211: Actions That Significantly Affect Energy Supply, Distribution, or Use

This proposed rule is not a "significant energy action" as defined in Executive Order 13211, "Actions Concerning Regulations That Significantly Affect Energy Supply, Distribution, or Use" (66 FR 28355, May 22, 2001) because it is not likely to have a significant adverse effect on the supply, distribution or use of energy. This proposed rule merely contains several minor and noncontroversial technical amendments to EPA's mobile source emission programs as described in the Summary and Section IV. Details of the Proposed Rule. We have, therefore, concluded that today's proposed rule will not affect the regulatory burden for all small entities and will not have a significant economic impact on a substantial number of small entities.

I. National Technology Transfer and Advancement Act

This proposed rule does not involve technical standards. This proposed rule merely contains several minor and noncontroversial technical amendments to EPA's mobile source emission programs as described in the Summary and Section IV. Details of the Proposed Rule. We have, therefore, concluded that today's proposed rule will not affect the regulatory burden for all small entities and will not have a significant economic impact on a substantial number of small entities. Thus, we have determined that the requirements of the NTTAA do not apply. *See* the direct final rule EPA has published in the "Rules and Regulations" section of today's **Federal Register** for a more extensive discussion of NTTAA policy.

J. Executive Order 12898: Federal Actions To Address Environmental Justice in Minority Populations and Low-Income Populations

EPA has determined that this proposed rule will not have disproportionately high and adverse human health or environmental effects on minority or low-income populations because it does not affect the level of protection provided to human health or the environment. *See* the direct final rule EPA has published in the "Rules and Regulations" section of today's **Federal Register** for a more extensive discussion of Executive Order 13045.

K. Statutory Authority

The statutory authority for this action comes from 42 U.S.C. 7401–7671q.

List of Subjects

40 CFR Part 86

Environmental protection, NTE, Administrative practice and procedure, Confidential business information, Labeling, Motor vehicle pollution, Reporting and recordkeeping requirements.

40 CFR Part 1033

Environmental protection, Administrative practice and procedure, Confidential business information, Incorporation by reference, Labeling, Penalties, Railroads, Reporting and recordkeeping requirements.

40 CFR Part 1039

Environmental protection, Administrative practice and procedure, Air pollution control, Confidential business information, Imports, Incorporation by reference, Labeling, Penalties, Reporting and recordkeeping requirements, Warranties.

40 CFR Part 1042

Environmental protection, Administrative practice and procedure, Air pollution control, Confidential business information, Imports, Incorporation by reference, Labeling, Penalties, Vessels, Reporting and recordkeeping requirements, Warranties.

40 CFR Part 1045

Environmental protection, Administrative practice and procedure, Air pollution control, Confidential business information, Imports, Incorporation by reference, Labeling, Penalties, Reporting and recordkeeping requirements, Warranties.

40 CFR Part 1054

Environmental protection, Administrative practice and procedure, Air pollution control, Confidential business information, Imports, Labeling, Penalties, Reporting and recordkeeping requirements, Warranties.

40 CFR Part 1065

Administrative practice and procedure, Air pollution control, Reporting and recordkeeping requirements, Research.

Dated: October 29, 2010.

Lisa P. Jackson,

Administrator.

[FR Doc. 2010–27894 Filed 11–5–10; 8:45 am]

BILLING CODE 6560–50–P

DEPARTMENT OF HEALTH AND HUMAN SERVICES

Centers for Medicare & Medicaid Services

42 CFR Part 433

[CMS–2346–P]

RIN 0938–AQ53

Medicaid; Federal Funding for Medicaid Eligibility Determination and Enrollment Activities

AGENCY: Centers for Medicare & Medicaid Services (CMS), HHS.

ACTION: Proposed rule.

SUMMARY: This proposed rule would revise Medicaid regulations for Mechanized Claims Processing and Information Retrieval Systems. Specifically, we are proposing to amend the definition of Mechanized Claims Processing and Information Retrieval Systems to include systems used for eligibility determination, enrollment, and eligibility reporting activities. We propose to modify our regulations so that the enhanced Federal financial participation (FFP) is available for design, development and installation or enhancement of eligibility determination systems until December 31, 2015, with enhanced FFP for maintenance and operations available for such systems beyond that date in certain circumstances. We also propose that all Medicaid Management Information Systems (MMISs) meet certain defined standards and conditions in terms of timeliness, accuracy, efficiency, and integrity and that they achieve high positive levels of consumer experience, acceptance and satisfaction in order to receive enhanced FFP.

DATES: To be assured consideration, comments must be received at one of the addresses provided below, no later than 5 p.m. January 7, 2011.

ADDRESSES: In commenting, please refer to file code CMS–2346–P. Because of staff and resource limitations, we cannot accept comments by facsimile (FAX) transmission.

You may submit comments in one of four ways (please choose only one of the ways listed):

1. *Electronically.* You may submit electronic comments on this regulation to *http://www.regulations.gov.* Follow the "Submit a comment" instructions.

2. *By regular mail.* You may mail written comments to the following address ONLY: Centers for Medicare & Medicaid Services, Department of Health and Human Services, Attention: CMS–2346–P, P.O. Box 8016, Baltimore, MD 21244–8016.

Please allow sufficient time for mailed comments to be received before the close of the comment period.

3. *By express or overnight mail.* You may send written comments to the following address ONLY: Centers for Medicare & Medicaid Services, Department of Health and Human Services, Attention: CMS–2346–P, Mail Stop C4–26–05, 7500 Security Boulevard, Baltimore, MD 21244–1850.

4. *By hand or courier.* If you prefer, you may deliver (by hand or courier) your written comments before the close of the comment period to either of the following addresses: a. For delivery in Washington, DC—Centers for Medicare & Medicaid Services, Department of Health and Human Services, Room 445–G, Hubert H. Humphrey Building, 200 Independence Avenue, SW., Washington, DC 20201.

(Because access to the interior of the Hubert H. Humphrey Building is not readily available to persons without Federal government identification, commenters are encouraged to leave their comments in the CMS drop slots located in the main lobby of the building. A stamp-in clock is available for persons wishing to retain a proof of filing by stamping in and retaining an extra copy of the comments being filed.)

b. For delivery in Baltimore, MD—Centers for Medicare & Medicaid Services, Department of Health and Human Services, 7500 Security Boulevard, Baltimore, MD 21244–1850.

If you intend to deliver your comments to the Baltimore address, please call telephone number (410) 786–7195 in advance to schedule your arrival with one of our staff members.

Comments mailed to the addresses indicated as appropriate for hand or courier delivery may be delayed and received after the comment period.

FOR FURTHER INFORMATION CONTACT: Richard Friedman, (410) 786–4451.

SUPPLEMENTARY INFORMATION:

Inspection of Public Comments: All comments received before the close of the comment period are available for viewing by the public, including any personally identifiable or confidential business information that is included in a comment. We post all comments received before the close of the comment period on the following Web site as soon as possible after they have been received: *http://www.regulations.gov.* Follow the search instructions on that Web site to view public comments.

Comments received timely will also be available for public inspection as they are received, generally beginning approximately 3 weeks after publication of a document, at the headquarters of the Centers for Medicare & Medicaid Services, 7500 Security Boulevard, Baltimore, Maryland 21244, Monday through Friday of each week from 8:30 a.m. to 4 p.m. To schedule an appointment to view public comments, phone 1–800–743–3951.

I. Background

A. The Current State of the Medicaid Management Information System (MMIS)

A Medicaid management information system (MMIS) is a mechanized system of claims processing and information retrieval used in State Medicaid programs under title XIX of the Social Security Act (the Act). The system is used to process Medicaid claims from providers and to retrieve and produce utilization data and management information about medical care and services furnished to Medicaid recipients. The system also is potentially eligible to receive enhanced administrative funding from the Federal government under section 1903(a)(3) of the Act. Specifically, section 1903(a)(3)(A)(i) of the Act provides that Federal financial participation (FFP) is available at 90 percent of expenditures for the design, development, or installation of mechanized claims processing and information retrieval systems as the "Secretary determines is likely to provide more efficient, economical and effective administration of the plan and to be compatible with the claims processing and information retrieval systems utilized in the administration of title XVIII [that is, Medicare]." In addition, section 1903(a)(3)(B) provides for the availability of FFP at 75 percent of expenditures attributable to operating the "systems * * * of the type described in [section 1903(a)(3)] subparagraph (A)(i)," which are approved by the Secretary and meet certain other requirements (including requirements relating to explanations of benefits). For purposes of this proposed rule, we refer to 90 percent and 75 percent FFP as "enhanced" FFP since it is greater than the 50 percent FFP available for most Medicaid administrative expenses. Finally, section 1903(r) of the Act places conditions on a State's ability to receive Federal funding for automated data systems in the administration of the State plan.

In order to receive an enhanced match, the Secretary must find that the mechanized claims and information retrieval system is adequate to provide

efficient, economical, and effective administration of the State plan. The Patient Protection and Affordable Care Act of 2010 (Pub. L. 111–148, as amended by the Health Care and Education Recovery Act of 2010; Pub. L. 111–152, together referred to as the Affordable Care Act) also made additional changes to the requirements within section 1903(r) of the Act relating to the reporting of data to the Secretary; these requirements will be discussed in separate rulemaking.

Our Federal regulations concerning mechanized claims processing and information retrieval systems are at 42 CFR part 433, subpart C. A State that chooses to develop, enhance, or replace its required system or subsystems must first submit for approval an Advanced Planning Document (APD). The general HHS requirements for approval of APDs are found at 45 CFR part 95, subpart F.

B. Availability of Enhanced FFP for Automated Eligibility Systems

Historically, Medicaid eligibility for many applicants and recipients was determined by an agency other than the State Medicaid agency; under section 1902(a)(10)(A)(i) of the Act, States were required to provide Medicaid to recipients under the Aid to Families with Dependent Children (AFDC) program, as well as recipients of the Supplemental Security Income (SSI) program. In these cases, eligibility determinations were derived from the cash welfare-assistance determination. As a result, States that maintained a Medicaid eligibility determination system usually integrated these systems into the public welfare systems. In 1989, we published a final rule on October 13, 1989 (54 FR 41966, effective November 13, 1989) excluding eligibility determination systems from the enhanced funding that was available under section 1903(a)(3) of the Act, reasoning that the close interrelationship between these cash assistance programs and Medicaid eligibility rendered such enhanced assistance redundant and unnecessary (54 FR 41966 through 41974). As a result, we revised the definition of mechanized claims processing and information retrieval systems to exclude eligibility determination systems.

We also indicated in the final rule that to receive any FFP for Medicaid purposes for an eligibility determination system after November 13, 1989, a State must submit an APD for funding in accordance with the requirements of 45 CFR part 95, subpart F. If we approved the APD, the State agency would receive 50 percent FFP for administrative costs under section 1903(a)(7) of the Act for the system's design, development, and installation, and operation.

C. Changes in Medicaid Eligibility Policies

Since promulgation of the 1989 regulation, a series of statutory changes have dramatically affected eligibility for Medicaid and how Medicaid eligibility is determined. Among other things, new eligibility coverage groups were created and expanded, and in 1996, Medicaid eligibility was "de-linked" from the receipt of cash assistance when the AFDC program was replaced by the Temporary Assistance to Needy Families (Pub. L. 104–193, enacted on July 1, 1997) (TANF) program.

With the passage of the Balanced Budget Act of 1997 (Pub. L. 105–33) (BBA), States were required to coordinate eligibility for and enrollment in Medicaid, with the new Children's Health Insurance Program (CHIP) to ensure enrollment of children in the appropriate program. With passage of the "Express Lane Eligibility" provisions in section 203 of the Children's Health Insurance Reauthorization Program Reauthorization Act of 2009 (Pub. L. 111–3) (CHIPRA), States were provided with the option, and are encouraged, to coordinate and expedite eligibility for children in Medicaid and CHIP by using findings regarding income and other eligibility criteria made by other agencies, such as the Supplemental Nutrition Assistance Program, as the basis for Medicaid and CHIP eligibility adjudications.

With the passage of the Affordable Care Act, we expect that changes to eligibility policies and business processes would need to be adopted. States would need to apply new rules to adjudicate eligibility for the program; enroll millions of newly eligible individuals through multiple channels; renew eligibility for existing enrollees; operate seamlessly with newly authorized Health Insurance Exchanges whether run by the State or HHS if the State chooses not to operate a State Exchange (hereafter referred to as "Exchanges"); participate in a system to verify information from applicants electronically; incorporate a streamlined application used to apply for multiple sources of coverage and health insurance assistance; and produce notices and communications to applicants and beneficiaries concerning the process, outcomes, and their rights to dispute or appeal. We further anticipate, following consultation with States and other stakeholders, additional standard Federal requirements for more timely and detailed reporting of eligibility and enrollment status statistics, including breakdowns by eligibility group, demographic characteristics, enrollment in managed care plans, and participation in waiver programs.

System transformations would be needed in most States to accomplish these changes. These systems transformations should be undertaken in full partnership with Exchanges in order to meet coverage goals, minimize duplication, ensure effective reuse of infrastructure and applications, produce seamless enrollment for consumers, and ensure accuracy of program placements. Extensive coordination and collaboration would be required between Exchanges and Medicaid, including on oversight and evaluation of the interoperability of the Exchange and Medicaid systems.

II. Provisions of the Proposed Regulations

A. Medicaid Eligibility Determinations

Because of the changes made by the Affordable Care Act with respect to Medicaid eligibility, as well as changes in Medicaid eligibility and business processes that have occurred since our 1989 final rule, we propose to consider Medicaid eligibility determinations to be "claims" of eligibility that can be considered part of the MMIS systems that are potentially eligible for the enhanced 90 and 75 percent FFP under section 1903(a)(3) of the Act. This proposed policy would apply only upon the effective date of the subsequent final rule. Additionally, we note that enhanced FFP does not eliminate the responsibility of States to ensure compliance with cost allocation principles outlined in OMB Circular A–87.

Further, as explained below, enhanced FFP at the 90 percent rate for design, development, installation or enhancement would be available for State expenditures only through calendar year (CY) 2015, even if work on approved APDs continues after 2015. Enhanced FFP at the 75 percent rate to maintain and operate systems that previously qualified for 90 percent FFP would be available after 2015 if those systems continue to meet the requirements specified in this rule. Additionally, enhanced funding at 75 percent to maintain and operate systems meeting the standards and conditions is available prior to December 31, 2015, (but after the effective date of any final rule), in recognition of the fact that some States may have already invested in improvements that will allow systems to qualify without the need for additional enhanced development,

design, installation or enhancement funding. For any State receiving enhanced FFP at 90 percent or 75 percent prior to December 31, 2015, systems must continue to meet the requirements specified in this rule in order to continue receiving 75 percent enhanced funding after December 31, 2015.

We are limiting the timeframe for which enhanced 90 percent FFP is available for design, development, installation or enhancement of automated eligibility systems because we view the changes made by the Affordable Care Act for the new eligibility rules in Medicaid as requiring immediate, substantial commitment to, and investment in, technologies. That is, we expect that changes to State systems would be completed with the start of the new Affordable Care Act provisions and support the operation of Exchanges on January 1, 2014. However, we realize that States may need to make additional changes to State systems to provide for additional functionality in support of Medicaid eligibility rule modifications. Thus, we are providing for an additional 2 years of 90 percent enhanced FFP so that States' systems would have additional time to ensure the peak performance of their systems.

At the same time, once appropriate systems are deployed to support the eligibility changes in the Affordable Care Act, we anticipate significant efficiencies in both application maintenance and business operations. Thus, we believe that after CY 2015, 2 years after the Affordable Care Act changes have gone into effect, additional investments in the design, development, and installation of such systems would no longer continue to result in "more" efficient, effective or economical administration of the State plan, as required by section 1903(a)(3)(A)(i) of the Act.

Additional investments in State eligibility systems are unlikely to yield similar rates of improvement and a regular administrative match (that is 50 percent FFP for design, development, installation or enhancement) should be sufficient for efficient and effective administration of State Medicaid programs. We also note that ending enhanced funding in 2015 follows closely with the end of Federal grants for development of health insurance exchanges. States would need to incur costs for goods and services furnished no later than December 31, 2015 to receive 90 percent FFP for the design, development, installation or enhancement of an eligibility determination system.

Further, we are proposing to limit the availability of 75 percent enhanced funding for maintenance and operations to those eligibility determination systems that have complied with the standards and conditions in this rule by December 31, 2015. As discussed above, the eligibility changes of the Affordable Care Act will require that States modify their eligibility systems in time to comply with all such eligibility changes, and we believe that to meet the requirements of section 1903(a)(3)(A)(i) of the Act, all such modifications must be in place by December 31, 2015. If eligibility systems cannot meet our standards and conditions by such deadline, then we believe such systems will not be operating in a more efficient, economical or effective manner, because of their inability to timely meet the requirements of the Affordable Care Act for seamless coordination with the Exchange and implementation of simplified Medicaid eligibility rules and expanded coverage. Therefore we believe their subsequent operation would not meet the statutory requirements that they result in a more efficient, economical and effective operation of the State plan.

B. Standards and Conditions for Receiving Enhanced Funding

Under sections 1903(a)(3)(A)(i) and 1903(a)(3)(B) of the Act, we are proposing standards and conditions that must be met by States in order for their Medicaid technology investments (including traditional claims processing systems, as well as eligibility systems) to be eligible for the enhanced match. These authorities provide that the enhanced FFP of 90 percent is not available unless the Secretary determines that a system is "likely to provide more efficient, economical, and effective administration of the plan" as described in section 1903(a)(3)(A)(i) of the Act. Similarly, section 1903(a)(3)(B) of the Act specifies that enhanced FFP of 75 percent is not available for maintenance or operations unless the system is "of the type described in subparagraph (A)(i)" and is approved by the Secretary).

Over the last 5 years CMS developed and implemented the Medicaid Information Technology Architecture (MITA). MITA is intended to foster integrated business and IT transformation across the Medicaid enterprise to improve the administration of the Medicaid program. (The Medicaid enterprise is comprised of the Federal government, the States, and any trading partners who exchange Medicaid transactions with either the States or the Federal government).

We believe the MITA initiative has accelerated the pace of modernization and over time, this effort will drive States' systems toward a widespread network of technology and processes that support improved State administration of the Medicaid program, with a focus on streamlining and simplifying the enrollment process, and improving health outcomes and administrative procedures for Medicaid beneficiaries.

The MITA initiative began in 2005 with the concept of moving the design and development of Medicaid information systems away from the siloed, sub-system components that comprise a typical MMIS and moving to a Service Oriented Architecture (SOA) method of designing Medicaid information systems using discretely identified and described business services to drive system requirements. The MITA initiative uses an architecture framework—business, technical, and information—along with a business maturity model and process and planning guidelines, to provide a framework for the planned use of technology and infrastructure to meet the changing business needs of Medicaid programs. MITA enables all State Medicaid enterprises to meet common objectives within the Framework, while still supporting local needs unique to one particular State.

All MITA framework documents are available to the public at *http://www.cms.gov/MedicaidInfoTechArch/.* The MITA Framework describes the maturity model, policies, and procedures.

We know that there is not a "one size fits all" technology solution to every business challenge and recognize that each technology investment must be viewed in light of existing, interrelated assets and their maturity. We also recognize that there are trade-offs concerning schedules, costs, risks, business goals, and other factors that should be considered when making technology investments. However, we wish to ensure that enhanced FFP is approved only when infrastructure and application projects maximize the extent to which they utilize current technology development and deployment practices and produce reliable business outputs and outcomes.

We are proposing to define MITA at § 433.111(c) in this rule and we propose to build on the work of MITA by codifying that enhanced FFP (either at the 90 percent rate for design, development, installation or enhancement; or at the 75 percent rate for maintenance and operations) is only available when certain standards and

conditions are met. Specifically, we articulate a set of standards and conditions that States must commit to in order to receive enhanced FFP:

• *Use of a modular, flexible approach to systems development, including the use of open interfaces and exposed application programming interfaces; the separation of business rules from core programming; and the availability of business rules in both human and machine readable formats.* We believe that this commitment is extremely important in order to ensure that States can more easily change and maintain systems, as well as integrate and interoperate with a clinical and administrative ecosystem designed to deliver person- and citizen-centric services and benefits.

• *Align to and advance increasingly in MITA maturity for business, architecture, and data.* We expect to see States continuing to make measurable progress in implementing their MITA roadmaps. Already the MITA investment by Federal, State, and private partners have allowed us to make important incremental improvements to share data and reuse business models, applications and components. However, it is critical to build on and accelerate the modernization we have collectively begun under MITA, so that States achieve the final vision of MITA and have a comprehensive framework with which to meet the technical and business demands required by an environment that will increasingly rely on health information technology and the electronic exchange of healthcare information to improve health outcomes and lower program costs.

• Ensure alignment with, and incorporation of, industry standards: the Health Insurance Portability and Accountability Act of 1996 security, privacy and transaction standards; accessibility standards established under section 508 of the Rehabilitation Act, or standards that provide greater accessibility for individuals with disabilities, and compliance with Federal civil rights laws; standards adopted by the Secretary under section 1104 of the Affordable Care Act; and standards and protocols adopted by the Secretary under section 1561 of the Affordable Care Act.

We must ensure that Medicaid technology investments are made both to ensure the timely and reliable adoption of industry standards and to make most productive use of those standards as they become available. Use of industry standards promotes reuse, data exchange, and reduces administrative burden on patients, providers, and applicants. We would communicate applicable standards to States. Standards would be updated periodically to ensure conformance with the standards in the industry. States would be required to update systems and practices to adhere to evolving industry standards in order to remain eligible for enhanced FFP. Use of standards to promote accessibility for individuals with disabilities ensures that Medicaid technology investments would be equally effective in providing access to benefits and services for all users, and would comply with Federal civil rights laws prohibiting discrimination against individuals with disabilities, such as section 504 of the Rehabilitation Act and Title II of the Americans with Disabilities Act.

• *Promote sharing, leverage, and reuse of Medicaid technologies and systems within and among States.* We would examine APDs to ensure that States make appropriate use and reuse of components and technologies available off the shelf or with minimal customization to maximize return on investment and minimize project risk. We intend to work with States to identify promising State systems that can be leveraged and used by other States. We anticipate that we would be able to expedite review of APDs incorporating such successful models. Further, we would strongly encourage States to move to regional or multi-State solutions as often as possible, and we would help facilitate collaboration and communication among States. We would also scrutinize carefully any proposed investments in sub-State systems when we are asked to share in the costs of updating or maintaining multiple systems performing essentially the same functions within the same State.

• *Support accurate and timely processing of claims (including claims of eligibility), adjudications, and effective communications with providers, beneficiaries, and the public.* Ultimately, the test of an effective and efficient system is whether it supports and enables an effective and efficient business process, producing and effectively communicating intended operational results with a high degree of reliability and accuracy. We do not believe that it would be appropriate for us to provide enhanced Federal funding for systems that are unable to support desired business outcomes.

• *Produce transaction data, reports, and performance information that would contribute to program evaluation, continuous improvement in business operations, and transparency and accountability.* Systems should be able to electronically and accurately produce and expose data necessary for oversight, administration, evaluation, integrity, and transparency. This includes program data on claims, expenditures, and enrolled individuals; participation in waivers and plans; performance data, such as processing times, accuracy, and appeal results; and traditional systems standards such as availability and down time.

We would develop a range of data and performance metrics on which States would be required to report on a regular basis, as a condition of receiving ongoing enhanced FFP for maintenance and operation.

• Ensure seamless coordination and integration with the Exchange(whether run by the State or Federal government), and allow interoperability with health information exchanges, public health agencies, human services programs, and community organizations providing outreach and enrollment assistance services.

We expect that a key outcome of our technology investments is a much higher degree of interaction and interoperability in order to maximize value and minimize burden and costs on providers and beneficiaries. Additionally, we expect that technology investments must comply with standards to ensure security and accessibility consistent with current Federal law and investments must comply with the requirements under existing Federal civil rights protections for all individuals in developing the system architecture.

We seek comments on these standards and conditions. In particular, we seek comments on the following:

• What types of Federal leadership, technical assistance, and sub-regulatory guidance would be helpful to support States as they come into compliance with these standards and conditions.

• Whether this list of standards and conditions is sufficiently robust and complete to guide decisions on technology investments of the scope and size of MMIS.

Further, to ensure that States have an opportunity to come into compliance with these requirements, we are proposing that States currently receiving enhanced FFP for MMIS have a period of transition to come into compliance with the standards and conditions above. Under our proposed schedule, the following transition periods would apply:

• *For new MMIS development (new APDs requesting 90 percent FFP for design, development, installation, and enhancement):* No transition period. We believe all APD requests submitted after

the effective date of the final rule must comply with all of our final standards and conditions.

• *For MMIS development already underway (approved APDs providing 90 percent enhanced FFP):* 12-month transition period (beginning with the effective date of the final regulation) in which to submit an updated Implementation APD (IAPD) detailing how systems would be modified to meet the required conditions and standards. This transition period would allow systems that are currently being developed to come into compliance with our standard and conditions, while ensuring that new systems receiving Federal funding are eventually designed in a manner that results in the most efficient use of technology.

• *For maintenance and operations of MMIS currently receiving 75 percent FFP:* 36-month transition period (beginning with the effective date of the final regulation) in which to submit an IAPD with plans to upgrade or modify systems to meet the required conditions and standards.

• *Eligibility systems (currently receiving 50 percent for development and maintenance and operations):* Because eligibility systems are not currently receiving enhanced funding, we propose no transition period for new requests for enhanced funding for eligibility systems. Any APDs requesting enhanced funding for eligibility systems funding following the effective date of this regulation would have to meet the standards and conditions above. States with eligibility systems currently under development (approved APDs providing 50 percent FFP) can update their APDs to reflect how they would comply with these standards and conditions in order to begin receiving 90 percent FFP. Similarly, eligibility systems currently receiving 50 percent FFP for State expenditures would need to comply with our final standards and conditions to receive a 75-percent FFP.

We request comments on this proposed transition schedule and whether the transition periods should be reduced or extended. We also request comments on how, during the transition period and beyond, we can provide strong Federal leadership by fostering collaboration among States, identifying and disseminating best practices, creating Federal models or components (*e.g.,* the Office of Consumer Information and Insurance Oversight's (OCIIO) Cooperative Agreement providing funding to create efficiencies in the design, development, and implementation of the Exchange IT systems), and assisting individual States.

Lastly, we are proposing that these standards and conditions be enforced through both front-end and back-end review processes. Front-end review would entail APD review and prior approval processes where States apply for enhanced match before entering into IT investment projects. Back-end reviews would entail certifications of the systems capabilities, as well as ongoing performance monitoring.

C. Reviews and Performance Monitoring of MMISs

Previously, regulations at § 433.119 indicated that we would review at least once every 3 years each system operation initially approved under § 433.114 and, based on the results of the review, reapprove it for FFP at 75 percent of expenditures if certain standards and conditions were met. The 3-year system performance reviews (SPRs) served as an evaluation instrument in determining the extent to which an MMIS performance is sustained after the initial certification. As part of SPRs, we determined if the system program logic was accurately and timely processing claims and payment information according to standards determined in Federal regulation. Subsequent recertification of a State's MMIS was based upon the results of the SPR. Prior to 1998, SPRs were performed annually.

We stopped performing such periodic reviews after enactment of section 4753 of the BBA (*See* section 11100 of the State Medicaid Manual). SPRs currently are performed only as part of focused reviews. The BBA also eliminated references to development and application of performance standards used to conduct periodic standards-based reviews of previously certified MMISs. As such, many of the provisions in 42 CFR part 433, subpart C should have been revised to comply with the repealed requirements; for example, much of the language included in § 433.119 through § 433.121 references the SPRs and the reduction of FFP in the event that States did not have systems that remained capable of processing claims and payments and/or were not performing well in completing these activities.

While the BBA eliminated the mandate that we perform SPRs, we do not believe it removed our discretion to perform reviews under our general authority to ensure that MMISs continue to operate in a manner that complies with Federal law, regulations, and guidance. The Secretary has authority to perform periodic reviews of MMIS systems (including eligibility determination systems receiving an enhanced FFP) to ensure that systems receiving enhanced FFP continue to meet the requirements of section 1903(a)(3) of the Act and that they continue to provide efficient, economical, and effective administration of the plan. Section 1903(a)(3)(B) of the Act allows for 75 percent FFP for the sums expended that are "attributable to the operation of systems * * * of the type described in subparagraph (A)(i)." The type of system described in "subparagraph (A)(i)" is one that, on an ongoing basis, results in "more efficient, economical and effective administration of the plan." In addition, the Secretary has authority under section 1903(r) of the Act to ensure continuing compliance with the requirements of that section.

Given our proposed modifications to part 433 of our regulations, as well as the new enhanced FFP for certain eligibility determination systems, we believe it is prudent for us to clearly state the expectation that ongoing successful performance is a necessary condition for receipt of the 75 percent FFP for operations and maintenance. We plan to establish standards and conditions that would ensure that all MMIS systems receiving enhanced FFP are complying with regulatory and statutory requirements. Through sub-regulatory guidance, we would explain further how we would measure whether the requirements are being met, such as through a core set of standards and conditions that focuses on the dimensions for systems that communicate to beneficiaries. We would also explain how States can meet any such performance measures.

For example, we would measure how a system meets requirements for providing notices to beneficiaries, claims and applications intake and acceptance, efficient timely and accurate processing of claims, applications and renewals, proper determinations, and experience with appeals, interoperability with Exchanges, as well as traditional systems standards such as availability and down time. We expect to see such data automatically generated by the systems in which we invest, with standards and conditions established in consultation with stakeholders and based on industry experience.

Additionally, we propose to evaluate systems based upon their interoperability with other Federal and State health programs. Thus, in operating their systems, States would need to ensure that they consult documents articulating the

Department's strategy on interoperability, such as the Guidance for Exchange and Medicaid Information Technology Systems.

We would expect that any failures or deficiencies would be the basis for investigation and opportunity for corrective action before making a determination that enhanced FFP would be discontinued.

Therefore, we propose to modify §§ 433.119 through 433.121 to eliminate any reference to SPRs but, more importantly, to reflect this requirement for performance monitoring and review. We are requesting comments on this proposal, as well as on the types of standards and conditions that should be employed initially and over time.

Additionally, States should consider that we propose to evaluate systems and consider interoperability with other Federal and State health programs. Thus, States should consider other documents that articulate the Department's strategy such as the Guidance for Exchange and Medicaid Information Technology Systems and continue to consider such guidance in meeting the requirements of this proposed rule.

D. Partial Systems Improvements or Modernizations

Throughout this proposed rule, we have used the word "system" or "technology" to refer to what might well be a system of systems maintained in States in support of MMIS functions. We recognize that a modernization agenda in such a State might well move in phases. However, States submitting partial system updates would need to submit and have an approved roadmap for achieving full compliance with the standards and conditions in this regulation. We would track progress against approved roadmap when determining if system updates meet the standards and conditions for the enhanced match. We also recognize that some enhancements currently eligible for enhanced funding are intended to satisfy a specific requirement or to address a compliance issue, for example, ICD–10 or implementation of the National Correct Coding Initiative. We invite comments on alternative approaches to best address these cases in applying our standards and conditions or performance monitoring.

E. Other Technical Changes to Federal Regulations at 42 CFR Part 433 Subpart C—Mechanized Claims Processing and Information Retrieval Systems

Since the enactment of the BBA, other provisions of our regulations have since been superseded. For example, regulations at § 433.113 (referencing the need to have mechanized claims processing and information retrieval systems by a certain deadline, or face reduced Federal Medicaid funds as a consequence) and § 433.130 (referencing waiver provisions for qualifying States with a certain 1976 population and expenditures) no longer apply. As we are revising our regulations to provide for the enhanced FFP for systems that perform eligibility and enrollment activities, we propose to also revise other provisions in part 433, subpart C to conform to the proposals set out in this rule. Thus, we are proposing to delete §§ 433.113 and 433.130 in their entirety, and references to the provisions in these sections that we are deleting.

Specifically, we propose to add a new definition to § 433.111 at (c) to include MITA. MITA is both an initiative and a framework. It is a national framework to support improved systems development and health care management for the Medicaid enterprise. It is an initiative to establish national guidelines for technologies and processes that enable improved program administration for the Medicaid enterprise. The MITA initiative includes an architecture framework, models, processes, and planning guidelines for enabling State Medicaid enterprises to meet common objectives with the framework while supporting unique local needs.

Further, we propose to amend § 433.111(b)(3) to eliminate the requirement that "Eligibility determination systems are not part of mechanized claims processing and information retrieval systems or enhancements to those systems." This, in effect, would mean that, once the subsequent final rule is effective, mechanized claims processing and information retrieval systems would include eligibility determination systems, including the allocated Medicaid portion of integrated eligibility determination systems. We note that eligibility determination systems would be eligible for the 90 and 75 percent FFP only after the effective date of our final rule.

We also propose to eliminate the provision at § 433.112(c), which currently states that "eligibility determination systems are not part of mechanized claims processing and information retrieval systems and are not eligible for 75 percent FFP under this Subpart. These systems are also not eligible for 90 percent FFP for any APD approved after November 13, 1989."

We propose to add language to § 433.112 to indicate that 90 percent and 75 percent FFP would be available for the design, development, installation or enhancement, and maintenance and operation (respectively) of mechanized claims processing systems, including those that perform eligibility determination and enrollment activities, as well as the Medicaid portion of integrated eligibility determination systems, if such systems meet our standards and conditions. (The 90 percent FFP for eligibility determination systems would be available only for a time-limited period, and the 75 percent FFP for eligibility determinations would be available only for those systems that come into compliance with the standards and conditions before the end of that time-limited period.)

By amending § 433.112, 90 percent and 75 percent FFP for a State's reasonable administrative expenditures for the design, development, installation or enhancement, and maintenance and operations to mechanized claims processing and information retrieval systems, (MMISs), including those that perform eligibility determination and enrollment activities, as well as the Medicaid portion of eligibility determination systems, would be available only if the APD is approved by us before the State's expenditure of funds and if the system meets the standards and conditions. For those systems that are currently approved for 90 percent FFP, we would provide a transition period of 12 months for States to submit an IAPD to modify and upgrade systems meet the standards and conditions established by this rule. For those systems that are already approved and currently receiving 75 percent FFP for maintenance and operations, the States would be required to submit an IAPD to modify and upgrade systems to meet the standards and conditions within 36 months. Both transition periods would begin with the effective date of the subsequent final rule. New systems seeking 90 percent FFP would need to demonstrate that they would meet all standards and conditions established by this rule. Eligibility determination systems currently operating would need to come into compliance with the standards and conditions in order to begin receiving 75 percent FFP for State expenditures. We believe this would provide States with a reasonable period of transition while still ensuring that State systems move expeditiously towards improvement and advanced technology.

States would be required to supply information and demonstrate consideration of the following items to CMS for review and approval and as part of the APD before we would grant approval of enhanced funding. We

would scrutinize all proposed investments and would decline to approve enhanced funding (resulting in 50 percent FFP) for proposals that do not demonstrate careful consideration and application of these standards and conditions. States would ensure that MMIS systems, including those that perform eligibility determinations and enrollment activities (as well as the Medicaid portion of eligibility determination systems) would be required to meet the following requirements:

(1) Use a modular, flexible approach to systems development, including the use of open interfaces and exposed application programming interfaces; the separation of business rules from core programming, available in both human and machine readable formats.

(2) Align to and advance increasingly in MITA maturity for business, architecture, and data.

(3) Ensure alignment with, and incorporation of, industry standards: The Health Insurance Portability and Accountability Act of 1996 privacy, security, and transaction standards; accessibility standards established under section 508 of the Rehabilitation Act, or standards that provide greater accessibility for individuals with disabilities, and compliance with Federal civil rights laws; standards adopted by the Secretary under section 1104 of the Affordable Care Act; and standards and protocols adopted by the Secretary under section 1561 of the Affordable Care Act.

(4) Promote sharing, leverage, and reuse of Medicaid technologies and systems within and among States.

(5) Support accurate and timely processing of claims (including claims of eligibility), adjudications, and effective communications with providers, beneficiaries, and the public.

(6) Produce transaction data, reports, and performance information that would contribute to program evaluation, continuous improvement in business operations, and transparency and accountability.

(7) Ensure seamless coordination and integration with the Exchange, and allow interoperability with health information exchanges, public health agencies, human services programs, and community organizations providing outreach and enrollment assistance services.

States can also choose to continue as they currently operate and receive 50 percent matching. However, this would not change the need for States to meet the substantive requirements of Federal legislation.

Further, we are proposing to codify at § 433.112(c) that we would provide 90 percent FFP for the design, development, installation or enhancement of an eligibility determination system only before December 31, 2015, even if work on an approved APD continues after 2015.

We believe that changes to State systems would be completed with the start of the new Affordable Care Act and support the operation of Exchanges on January 1, 2014. However, we realize that States may need to make additional changes to State systems to provide for additional functionality in support of the Exchanges, and/or Medicaid and CHIP eligibility expansions. Thus, we are providing for an additional 2 years of 90 percent enhanced FFP so that States' systems are provided with additional time to ensure the performance and efficiency of their systems.

States would need to incur costs for goods and services furnished no later than December 31, 2015 to receive 90 percent FFP for the design, development, installation or enhancement of an eligibility determination system.

Lastly, we propose to revise § 433.119 to account for performance monitoring and reviews and to make related conforming changes to part 433.

III. Collection of Information Requirements

Under the Paperwork Reduction Act of 1995, we are required to provide 60-day notice in the **Federal Register** and solicit public comment before a collection of information requirement is submitted to the Office of Management and Budget (OMB) for review and approval. In order to fairly evaluate whether an information collection should be approved by OMB, section 3506(c)(2)(A) of the Paperwork Reduction Act of 1995 requires that we solicit comment on the following issues:

- The need for the information collection and its usefulness in carrying out the proper functions of our agency.
- The accuracy of our estimate of the information collection burden.
- The quality, utility, and clarity of the information to be collected.
- Recommendations to minimize the information collection burden on the affected public, including automated collection techniques.

The changes specified in this proposed rule do not impose any new reporting, recordkeeping or disclosure requirements. States already submit to us for review and approval APDs for funding for automated data processing in accordance with Federal regulations at 45 CFR part 95, subpart F. The burden associated with the aforementioned information collection requirements is currently approved under OCN 0938–1088 and expires May 31, 2013. We are, however, requesting comments on our analysis; that is, that the specific requirements imposed by this rule do not mandate any additional information collection requirements on States.

IV. Response to Comments

Because of the large number of public comments we normally receive on **Federal Register** documents, we are not able to acknowledge or respond to them individually. We will consider all comments we receive by the date and time specified in the **DATES** section of this preamble, and, when we proceed with a subsequent document, we will respond to the comments in the preamble to that document.

V. Regulatory Impact Analysis

A. Overall Impact

The estimated costs of the Federal-share for Medicaid administration have been reflected in the Mid-Session Review of the FY 2011 President's Budget.

We have examined the proposed impacts of this rule as required by Executive Order 12866, the Regulatory Flexibility Act (RFA), section 1102(b) of the Act regarding rural hospital impacts, the Unfunded Mandates Reform Act, Executive Order 13132 on Federalism, and the Congressional Review Act.

Executive Order 12866 directs agencies to assess all costs and benefits of available regulatory alternatives and, if regulation is necessary, to select regulatory approaches that maximize net benefits (including potential economic, environmental, public health and safety effects, distributive impacts, and equity). A regulatory impact analysis (RIA) must be prepared for rules with economically significant effects ($100 million or more in any 1 year). This proposed rule is anticipated to have an annual effect on the economy of $100 million or more, making it an economically significant rule under the Executive Order and a major rule under the Congressional Review Act. Accordingly, we have prepared a RIA that to the best of our ability presents the costs and benefits of the proposed rule.

States could continue to receive the traditional 50 percent FFP for reasonable administrative expenditures for designing, developing, installing, or enhancing the Medicaid portion of their integrated eligibility determination

systems. Similarly, States could continue to receive 50 percent FFP for expenditures associated with the maintenance and operation of such systems.

This proposed rule addresses the impact related to enhanced FFP for mechanized claims processing and information retrieval systems, including those that perform eligibility determination and enrollment activities, as well as the Medicaid portion of integrated eligibility determination systems that the Secretary determines are likely to provide more efficient, economical, and effective administration of the State plan.

In projecting the impact to the Federal government and State Medicaid agencies, we considered how the proposed standards and conditions on MMIS and the availability of enhanced match for State eligibility systems through CY 2015 would impact State investments over the 10-year period of 2011 through 2020. As discussed further below, we considered the expected costs to the Federal government of providing the enhanced match rate, changes in state investments due to the application of standards and conditions on MMIS (including eligibility systems), and possible savings as a result of the use of more modern, reusable, and efficient technologies.

B. Potential Savings

We considered a number of ways in which application of the standards and conditions, including increased use of MITA, could result in savings; however, as no States have yet reached MITA maturity, it is difficult to predict the savings that may accrue over any certain timeframe. These areas include the following:

(1) *Modular technology solutions:* As States, or groups of States, would begin to develop "modular" technology solutions, these solutions could be used by others through a "plug and play" approach, in which pieces of a new MMIS would not need to be reinvented from scratch every time, but rather, could be incorporated into the MMIS framework.

We assume that savings associated with reusable technology could be achieved in both the development and operation of new systems. We expect that States would dispense with the need to engage in significant requirements analyses and the need to pay for new modules to be built when there are successful models around the country that they can draw down from a "technology bank" maintained by the Federal or State governments.

(2) *Increased use of industry standards and open source technologies:* While HIPAA administrative transaction standards have existed for 5 to 7 years, use of more specific industry standards to build new systems would allow such systems to exchange information seamlessly—a major goal of the Affordable Care Act, and one that is the explicit purpose of the standards work envisioned within section 1561 of the Act. We also believe that more open source technology would encourage the development of software solutions that address the needs of a variety of diverse activities—such as eligibility, member enrollment, and pharmacy analysis of drug claims. Software that is sufficiently flexible to meet different needs and perform different functions could result in cost savings, as States are able to use the systems without making major adaptations to them.

(3) *Maintenance and operations:* As States take up the changes in this proposed rule, the maintenance/operation costs of new systems should decrease. Less maintenance should be required than that necessary to reengineer special, highly customized systems every time there is a new regulatory or legal requirement.

(4) *Reengineering business processes, more Web-based solutions, service-oriented architecture (SOA):* Savings are likely to result from the modular design and operation of systems, combined with use of standardized business processes, as States are be compelled to rethink and streamline processes as a result of greater reliance on technology.

C. Calculation of MMIS Costs

MMIS costs are estimated at approximately $10.0 billion over the 5-year budget window and $23.0 billion over the 10-year budget window. These costs represent only the Federal share.

To calculate the impact of the regulation on MMIS costs, we assumed that new systems on average would cost $150 million over 3 years for each State ($50 million total cost per year, or $45 million Federal costs at 90 percent FFP per year). We assumed ten States have sophisticated systems that are very close to meeting the proposed regulation standards. As a result, we assumed the remaining 41 States would have approved APDs in place to replace or update their MMIS between FY 2011 and FY 2013 to comply with the new regulation standards and conditions.

We assumed that early adopter States would see increased development, design, and installation costs, whereas late adopter States would see increased development, design, and installation savings as they are able to take advantage of efficiencies gained by the early adopter States. Specifically, for those States that update or build new systems in FY 2011 and FY 2012, we assumed a 10 percent annual cost increase to new MMIS systems for design, development, and installation. For those States that build new systems in FY 2013 and FY 2014, we assumed a 5 percent annual savings to new MMIS systems for design, development, and installation.

While it is difficult to predict State behavior, we believe all States would comply with the standards and conditions proposed in this regulation to receive the 90 percent FFP, and have assumed that for the purpose of these estimates.

For maintenance, we assumed those States that have implemented the new regulation requirements would see a 20 percent annual savings, and for operations, we assumed those States that have implemented the new regulation requirements would see a 5 percent annual savings.

Based on these assumptions, we estimate the net Federal budgetary impact on baseline MMIS costs from FY 2011 through 2015 of implementing the proposed regulation is approximately $1.1 billion, and the net Federal budgetary impact from FY 2011 through 2020 is approximately $557 million in savings.

D. Calculation of Eligibility Systems Costs

For eligibility systems, we applied the same methodology we used to calculate net Federal costs to MMIS under the proposed regulation.

In order to meet the requirements of the Affordable Care Act, States would build new systems or modernize existing systems. Rather, most States will add new functionalities to interface with the Exchanges and implement new adaptability standards and conditions (such as incorporation of new mandated eligibility categories). We assume baseline costs for development, design, and installation at 50 percent FFP for all States are approximately $815 million from FY 2011 through 2015 and $1.1 billion from FY 2011 through 2020. Eligibility systems costs for maintenance and operations at 50 percent for all States are approximately $1.2 billion from FY 2011 through 2015 and $2.7 billion from FY 2011 through 2020. These costs represent only the Federal share.

To calculate the impact of the regulation, we assumed that new systems on average would cost $50 million over 3 years for each State

($16.7 million total cost per year, or $15 million Federal costs at 90 percent FFP per year). We assumed that 25 States would replace their eligibility systems in FY 2011 through CY 2015. We assumed no States would build new systems past FY 2014 (beyond what is assumed in the baseline) due to the timing of the start of major coverage provisions in the Affordable Care Act, the length of time needed to build new systems (approximately 3 years), and the enhanced match ending after CY 2015. For maintenance, we assumed States that have implemented new systems meeting the required standards and conditions would see a 20 percent annual savings, and for operations, we assumed those States that have implemented the new systems would see a 5 percent annual savings. These assumptions are consistent with our approach for savings under MMIS in the proposed regulation.

The net Federal cost impact from FY 2011 through 2015 of implementing the proposed regulation on eligibility systems is approximately $2.2 billion, and the net Federal cost from FY 2011 through 2020 is $2.9 billion. These costs represent only the Federal share.

E. Total Net Cost Impact

Combining the impact of the proposed regulation, the total net Federal cost impact is approximately $3.3 billion for FY 2011 through 2015 and approximately $2.3 billion for FY 2011 through 2020. We see lower costs over the 10-year budget window due to the increased savings to MMIS over time.

Aligned with these Federal net costs, States will see a corresponding decrease in their net State share due to the enhanced Federal match for eligibility systems they will receive through CY 2015 and the benefits accrued to their systems by putting in place the set of standards and conditions articulated in this proposed regulation. Combining the impact of the proposed regulation, the total net State budget impact is approximately $792.5 million in savings for FY 2011 through 2015 and approximately $1.9 billion in savings for FY 2011 through 2020. Similar to the Federal budget impact, we expect to see higher savings achieved by States over the 10-year budget window due to the increased savings to MMIS over time.

The projections in this analysis are subject to considerable uncertainty, as they reflect projected costs based on technology and innovation. While we believe that advancements in technology would likely have an impact on States' systems, it is difficult to predict with certainty how significant the technology advancements may be and how they would affect State systems. For example, we have worked for many years developing the MITA maturity model. We believe that States should adopt the MITA framework as the basis for all MMIS replacements and major system upgrades related to the MMIS, and while we are requiring that States move to a MITA framework in order to receive enhanced funding, to date there are no States that have reached full MITA maturity. Consequently, having no States at full MITA maturity would indicate that it takes time, money and considerable effort for States to make changes to their current technology.

Additional uncertainty exists because we are unsure of the rate of adoption for States to make the changes in this proposed rule. The enhanced FFP is available for approximately 5 years, from CY 2011 through CY 2015, and States could upgrade or replace their systems at any point within the 5-year period. Further, States may simply choose to make moderate changes to existing systems, and even with the 90 and 75 percent enhanced FFP, such moderate changes could be less costly overall for States than replacing their systems.

Additional uncertainty exists about the rate of State adoption since some States may consider the costs needed to move to a more advanced system to be too high to undertake such a project. Similarly, States may decide not to make changes due to implementation of performance requirements and the performance reviews.

We acknowledge that there are uncertainties regarding our assumptions, including State behavior, and the associated cost estimates with respect to states implementing new systems within the timeframe assessed. However, we have offered our estimates with a 25 percent upper and lower range to capture such uncertainty in actual implementation outcomes. Due to a number of uncertainties in our assumptions, we believe a range of estimates better represents the net cost impact of this proposed regulation. Tables 1 and 2 represent a 25 percent range for these aggregate net costs to the Federal and State government, respectively. It is important to point out that we believe that systems transformation is necessary to meet the vision of the Affordable Care Act and consequently, these costs are necessary and would provide for efficient systems that in the end would provide for more efficient and effective administration of the State plan. The separate impacts to MMIS and eligibility systems are summarized below.

TABLE 1—NET FEDERAL COST IMPACT OF PROPOSED REGULATION

[Dollars in millions*]

	FY 2011–2020
MMIS (excluding Eligibility)	(417.4)–(695.7)
Eligibility Systems	2,154.6–3,591.0
Total	1,737.2–2,895.3

* Numbers in parentheses represent savings to the Federal Government.

TABLE 1.1—NET FEDERAL COST IMPACT OF PROPOSED REGULATION BY FISCAL YEAR

[Dollars in millions*]

	2011	2012	2013	2014	2015	2016	2017	2018	2019	2020	2011–2020
MMIS (excluding Eligibility)	231.1	469.4	435.6	54.3	(83.0)	(322.6)	(329.0)	(333.1)	(337.4)	(341.8)	(556.6)
Eligibility Systems	328.9	436.7	634.6	469.3	337.4	127.9	130.5	133.1	135.8	138.5	2,872.8
Total	560.0	906.1	1,070.2	523.6	254.4	(194.7)	(198.5)	(200.0)	(201.6)	(203.3)	2,316.2

* Numbers in parentheses represent savings to the Federal Government.

TABLE 2—NET STATE COST IMPACT OF PROPOSED REGULATION

[Dollars in millions *]

	FY 2011–2020
MMIS (excluding Eligibility)	(170.6)–(284.4)
Eligibility Systems	(1,255.4)–(2,092.3)
Total	(1,426.0)–(2,376.7)

* Numbers in parentheses represent savings to State governments.

TABLE 2.1—NET STATE COST IMPACT OF PROPOSED REGULATION BY FISCAL YEAR

[Dollars in millions *]

	2011	2012	2013	2014	2015	2016	2017	2018	2019	2020	2011–2020
MMIS (excluding Eligibility)	25.7	52.2	48.4	1.3	(24.1)	(61.6)	(65.2)	(66.6)	(68.0)	(69.5)	(227.5)
Eligibility Systems	(285.6)	(276.7)	(258.0)	(139.9)	64.3	(149.5)	(152.5)	(155.5)	(158.6)	(161.8)	(1,673.8)
Total	(259.9)	(224.6)	(209.6)	(138.6)	40.2	(211.1)	(217.7)	(222.1)	(226.6)	(231.3)	(1,901.3)

* Numbers in parentheses represent savings to State Governments.

F. Regulatory Flexibility Analysis

The Regulatory Flexibility Act (RFA) requires agencies to prepare an Initial Regulatory Flexibility Analysis to describe and analyze the impact of proposed rule on small entities unless the Secretary can certify that the regulation would not have a significant impact on a substantial number of small entities. In the healthcare sector, Small Business Administration size standards define a small entity as one with between $7 million and $34 million in annual revenues. For the purposes of the RFA, essentially all non-profit organizations are considered small entities, regardless of size. Individuals and States are not included in the definition of a small entity.

Since this rule would affect States, which are not considered small entities, the Secretary has determined that this proposed rule would not be likely to have a significant economic impact on a substantial number of small entities. Therefore, we have not prepared a regulatory flexibility analysis.

Additionally, section 1102(b) of the Act requires us to prepare a regulatory impact analysis if a rule may have a significant impact on the operation of a substantial number of small rural hospitals. This analysis must conform to the provisions of section 603 of the RFA. For purposes of section 1102(b) of the Act, we define small rural hospital as a hospital that is located outside of a Metropolitan Statistical Area and has fewer than 100 beds. We are not preparing an analysis for section 1102(b) of the Act because we have determined that this rule would not have a significant impact on the operations of a substantial amount of small rural hospitals. There is no negative impact on the program or on small businesses.

Section 202 of the Unfunded Mandates Reform Act of 1995 also requires that agencies assess anticipated costs and benefits before issuing any rule that may result in expenditures in any one year by State, local, or tribal governments, in the aggregate, or by the private sector of $135 million. This rule does not mandate expenditures by the State governments, local governments, tribal governments, or the private sector. This rule provides that States can receive enhanced FFP if States ensure that the mechanized claims processing and information retrieval systems, (MMISs), including—for a limited time—those that perform eligibility determination and enrollment activities, as well as the Medicaid portion of integrated eligibility determination systems, meet with certain conditions including migrating to the MITA framework and meeting certain performance requirements. This is a voluntary activity; i.e., States can continue to receive the traditional 50 percent FFP match rate for reasonable administrative expenditures for the design, development, or enhancement and maintenance and operations to the Medicaid portion of integrated eligibility determination systems in order to make eligibility determinations for Title XIX. This rule imposes no substantial mandates on States. The State role in determining Medicaid eligibility is dependent upon the population type; specifically, some populations such as the elderly, blind, and disabled are typically determined by the Medicaid State agency whereas other population types may have their Medicaid eligibility determined by cash-assistance programs. Mechanized claims processing and information retrieval systems, including those that perform eligibility determination and enrollment activities and the Medicaid portion of integrated eligibility determination systems, at a minimum, will need to be updated. However, providing 90 percent FFP for design, development, and installation or 75 percent FFP for maintenance and operations of such systems reduces the financial burden on States to 10 percent of the costs compared to the 50 percent financial burden currently in place. Specifically, while this entails certain procedural responsibilities, these activities do not involve substantial State expense; providing 90 percent and 75 percent FFP reduces the total State outlay.

Executive Order 13132 establishes certain requirements that an agency must meet when it promulgates a proposed rule (and subsequent final rule) that imposes substantial direct requirement costs on State and local governments, preempts State law, or otherwise has Federalism implications. We wish to note again that this is a voluntary activity and as such this regulation does not mandate any direct costs on State or local governments. Consequently, the requirements of Executive Order 13132 are not applicable.

G. Alternatives Considered

We considered that an alternative to our proposed rule would be that we not provide enhanced match for State systems builds and not provide Federal standards and conditions. In fact, States could continue to receive the traditional 50 percent FFP for reasonable administrative expenditures for designing, developing, installing, or enhancing Medicaid eligibility determination systems. Similarly, States could continue to receive 50 percent FFP for expenditures associated with

the maintenance and operation of such systems.

However, States must continue to meet the requirements of Federal legislation. Since the Affordable Care Act significantly alters Medicaid eligibility and requires coordination with the Exchanges, it is imperative that States have the resources and systems to be able to meet this challenge.

Therefore, we believe that if States were left to develop eligibility systems without Federal standards and conditions and without the benefit of enhanced match, States systems may not comport with our ultimate goal; that is, that design, development, implementation, and operation of IT and systems projects are in support of the Affordable Care Act.

H. Statement of Need

This regulation is important since with the passage of the Affordable Care Act, we expect that changes to eligibility policies and business processes would need to be adopted. System transformations would be needed in most States to apply new rules to adjudicate eligibility for the program; enroll millions of newly eligible individuals through multiple channels; renew eligibility for existing enrollees; operate seamlessly with newly authorized Health Insurance Exchanges ("Exchanges"), or with Federal "Exchanges" if States choose not to operate a State Exchange; participate in a system to verify information from applicants electronically; incorporate a streamlined application used to apply for multiple sources of coverage and financial assistance; and produce notices and communications to applicants and beneficiaries concerning the process, outcomes, and their rights to dispute or appeal.

We wish to ensure that that a key outcome of our technology investments is a much higher degree of interaction and interoperability in order to maximize value and minimize burden and costs on providers and beneficiaries. Thus, we are committed to providing 90 percent FFP for design, development, and installation through CY 2015 or 75 percent FFP for maintenance and operations of such systems. We have provided that States must commit to a set of standards and conditions in order to receive the enhanced FFP. This enhanced FFP reduces the financial burden on States to 10 percent of the costs compared to the 50 percent financial burden currently in place and ensures that States utilize current technology development and deployment practices and produce reliable business outputs and outcomes.

I. Accounting Statement

As required by OMB Circular A–4 (available at *http://www.whitehouse.gov/omb/circulars/a004/a-4.pdf*), in Table 3, we have prepared an accounting statement showing the classification of the expenditures associated with the provisions of this rule. This table provides our best estimate of the net costs decrease in Medicaid payments as a result of the changes presented in this rule. Because of the uncertainties identified in establishing the cost estimates, CMS intends to update the estimates with any final rule.

TABLE 3—ACCOUNTING STATEMENT: CLASSIFICATION OF ESTIMATED NET COSTS, FROM FY 2011 TO FY 2020

[In $ millions]

Category	TRANSFERS			
	Year dollar	Units discount rate		Period covered
	2010	7%	3%	
Annualized Monetized Transfers	Primary Estimate	$311.31	$266.55	FYs 2011–2020
	Low Estimate	233.48	199.91	
	High Estimate	389.14	333.19	
From	Federal Government to State Governments			
Annualized Monetized Transfers	Primary Estimate	−189.87	−189.82	FYs 2011–2020
	Low Estimate	−142.40	−142.36	
	High Estimate	−237.34	−237.28	
From	State Governments to System Vendors, Integrators			

In accordance with the provisions of Executive Order 12866, this regulation was reviewed by the Office of Management and Budget.

List of Subjects in 42 CFR Part 433

Administrative practice and procedure, Child support Claims, Grant programs—health, Medicaid, Reporting and recordkeeping requirements.

For the reasons set forth in the preamble, the Centers for Medicare & Medicaid Services proposes to amend 42 CFR chapter IV as set forth below:

PART 433—STATE FISCAL ADMINISTRATION

1. The authority citation for part 433 continues to read as follows:

Authority: Section 1102 of the Social Security Act, (42 U.S.C. 1302).

Subpart C—Mechanized Claims Processing and Information Retrieval Systems.

2. Section 433.110 is amended by revising paragraph (a)(2) to read as follows:

§ 433.110 Basis, purpose, and applicability.

(a) * * *

(2) Section 1903(r) of the Act, which imposes certain standards and conditions on mechanized claims processing and information retrieval systems (including eligibility determination systems) in order for these systems to be eligible for Federal funding under section 1903(a) of the Act.

* * * * *

3. Section 433.111 is amended by—

A. Removing paragraph (b)(3).

B. Adding paragraph (c).

The addition reads as follows:

§ 433.111 Definitions.

* * * * *

(c) "Medicaid Information Technology Architecture (MITA)" is defined at § 495.302.

4. Section 433.112 is amended by—

A. Adding "Subject to paragraph (c) of this section," at the beginning of paragraph (a).

B. Revising paragraphs (b)(2) and (c).

C. Removing the cross-reference to "45 CFR 74.171" and adding "45 CFR 74.27(a)" in its place in paragraph (b)(7).

D. Adding paragraphs (b)(10) through (16).

The revisions and additions read as follows:

§ 433.112 FFP for design, development, installation or enhancement of mechanized claims processing and information retrieval systems.

* * * * *

(b) * * *

(2) The system meets the system requirements and standards and conditions in Part 11 of the State Medicaid Manual, as periodically amended.

* * *

(10) Use a modular, flexible approach to systems development, including the use of open interfaces and exposed application programming interfaces; the separation of business rules from core programming, available in both human and machine readable formats.

(11) Align to, and advance increasingly, in MITA maturity for business, architecture, and data.

(12) Ensure alignment with, and incorporation of, industry standards: the Health Insurance Portability and Accountability Act of 1996 privacy, security and transaction standards; accessibility standards established under section 508 of the Rehabilitation Act, or standards that provide greater accessibility for individuals with disabilities, and compliance with Federal civil rights laws; standards adopted by the Secretary under section 1104 of the Affordable Care Act; and standards and protocols adopted by the Secretary under section 1561 of the Affordable Care Act.

(13) Promote sharing, leverage, and reuse of Medicaid technologies and systems within and among States.

(14) Support accurate and timely processing and adjudications/eligibility determinations and effective communications with providers, beneficiaries, and the public.

(15) Produce transaction data, reports, and performance information that would contribute to program evaluation, continuous improvement in business operations, and transparency and accountability.

(16) Ensure seamless coordination and integration with the Exchange, and allow interoperability with health information exchanges, public health agencies, human services programs, and community organizations providing outreach and enrollment assistance services.

(c) FFP is available at 90 percent of a State's expenditures for the design, development, installation, or enhancement of an eligibility determination system that meets the requirements of this subpart beginning, and no earlier than, [effective date of the final rule], and only through December 31, 2015.

§ 433.113 [Removed]

5. Section 433.113 is removed.

6. Section 433.114 is amended by—

A. In paragraph (a), removing "(h)" and adding in its place "(i)".

B. Revising paragraph (b).

The revision reads as follows:

§ 433.114 Procedures for obtaining initial approval; notice of decision.

* * * * *

(b) If CMS disapproves the system, the notice will include the following information:

(1) The findings of fact upon which the determination was made.

(2) The procedures for appeal of the determination in the context of a reconsideration of the resulting disallowance to the Departmental Appeals Board.

7. Section 433.116 is amended by—

A. In paragraph (a), removing "Subject to 42 CFR 433.113(c)," and replacing it with "Subject to paragraph (j) of this section,".

B. In paragraph (b), removing "(h)" and adding in its place "(i)".

C. Adding new paragraphs (i) and (j).

The additions read as follows:

§ 433.116 FFP for operation of mechanized claims processing and information retrieval systems.

* * * * *

(i) The standards and conditions of § 433.112(b)(10) through (16) must be met.

(j) Beginning and no earlier than, [add in effective date of final rule], FFP is available at 75 percent of a State's expenditures for the operation of an eligibility determination system that meets the requirements of this subpart. FFP at 75 percent is not available for eligibility determination systems that do not meet the standards and conditions by December 31, 2015.

§ 433.117 [Amended]

8. Section 433.117 is amended by—

A. Amending paragraph (a) by removing the phrase "all conditions" and adding in its place the phrase "all standards and conditions".

B. Amending paragraph (c)(2) by removing the reference "(h)" and adding "(i)" in its place.

9. Section 433.119 is amended by—

A. Revising paragraphs (a) introductory text.

B. Revising paragraph (a)(1).

C. Amending paragraph (a)(2) by removing the reference "(h)" and adding "(i)" in its place.

D. Revising paragraphs (a)(4) and (c).

The revisions read as follows:

§ 433.119 Conditions for reapproval; notice of decision.

(a) CMS periodically reviews each system operation initially approved under § 433.114 and reapproves it for FFP at 75 percent of expenditures if the following standards and conditions are met:

(1) The system meets the requirements of § 433.112(b)(1), (3), (4), (7) through (16).

* * * * *

(4) A State system must meet all of the requirements of this subpart within the appropriate period CMS determines should apply as required by § 433.123(b).

* * * * *

(c) After performing the review under paragraph (a) of this section, CMS will issue to the Medicaid agency a written notice informing the agency whether the system is reapproved or disapproved. If the system is disapproved, the notice will include the following information:

(1) CMS's decision to reduce FFP for system operations from 75 percent to 50 percent of expenditures, beginning with the first day of the first calendar quarter after CMS issues the written notice to the State.

(2) The findings of fact upon which the determination was made.

(3) A statement that State claims in excess of the reduced FFP rate will be disallowed and that any such disallowance will be appealable to the Departmental Appeals Board.

10. Section 433.120 is amended by revising paragraph (b) to read as follows:

§ 433.120 Procedures for reduction of FFP after reapproval review.

* * * * *

(b) CMS will reduce FFP in expenditures for system operations from 75 percent to 50 percent.

11. Section 433.121 is amended by revising paragraph (a) to read as follows:

§ 433.121 Reconsideration of the decision to reduce FFP after reapproval review.

(a) The State Medicaid agency may appeal (to the Departmental Appeals Board under 45 CFR part 16) a disallowance concerning a reduction in

FFP claimed for system operations caused by a disapproval of the State's system.

* * * * *

§ 433.130 [Removed]

12. Section 433.130 is removed.

Authority: (Catalog of Federal Domestic Assistance Program No. 93.778, Medical Assistance Program).

Dated: October 14, 2010.

Donald M. Berwick,

Administrator, Centers for Medicare & Medicaid Services.

Approved: October 28, 2010.

Kathleen Sebelius,

Secretary, Department of Health and Human Services.

[FR Doc. 2010–27971 Filed 11–3–10; 11:15 am]

BILLING CODE 4120–01–P

Notices

Federal Register

Vol. 75, No. 215

Monday, November 8, 2010

This section of the FEDERAL REGISTER contains documents other than rules or proposed rules that are applicable to the public. Notices of hearings and investigations, committee meetings, agency decisions and rulings, delegations of authority, filing of petitions and applications and agency statements of organization and functions are examples of documents appearing in this section.

DEPARTMENT OF AGRICULTURE

Submission for OMB Review; Comment Request

November 3, 2010.

The Department of Agriculture has submitted the following information collection requirement(s) to OMB for review and clearance under the Paperwork Reduction Act of 1995, Public Law 104–13. Comments regarding (a) Whether the collection of information is necessary for the proper performance of the functions of the agency, including whether the information will have practical utility; (b) the accuracy of the agency's estimate of burden including the validity of the methodology and assumptions used; (c) ways to enhance the quality, utility and clarity of the information to be collected; (d) ways to minimize the burden of the collection of information on those who are to respond, including through the use of appropriate automated, electronic, mechanical, or other technological collection techniques and other forms of information technology should be addressed to: Desk Officer for Agriculture, Office of Information and Regulatory Affairs, Office of Management and Budget (OMB), *OIRA_Submission@OMB.EOP.GOV* or fax (202) 395–5806 and to Departmental Clearance Office, USDA, OCIO, Mail Stop 7602, Washington, DC 20250–7602. Comments regarding these information collections are best assured of having their full effect if received within 30 days of this notification. Copies of the submission(s) may be obtained by calling (202) 720–8681.

An agency may not conduct or sponsor a collection of information unless the collection of information displays a currently valid OMB control number and the agency informs potential persons who are to respond to the collection of information that such persons are not required to respond to the collection of information unless it displays a currently valid OMB control number.

Forest Service

Title: Outreach/Ethnicity Questionnaires.

OMB Control Number: 0596–0207.

Summary of Collection: Title VI of the Civil Rights Act prohibits discrimination based on race, color, or national origin in federally assisted or direct programs of the Federal Government. Section 703 in Title VII of the Civil Rights Act prohibits discrimination in employment based on race, color, religion, sex, or national origin in actions affecting employees or applicants for employment. The Forest Service requires outreach and recruitment of diverse candidates as a strategy to create a diverse and multicultural workforce within the agency. The Forest Service will do two questionnaires, FS–NRS–1700–1 and FS–1700–5 to collect information regarding ethnicity and race, which program the respondent is currently participating, and information from students attending local college and university career fairs about the effectiveness of information provided by personnel regarding career opportunities in the Forest Service.

Need and Use of the Information: The information will be used to evaluate effectiveness of the Civil Rights Outreach Programs conducted by the Northern Research Station, as well as the Forest Service's Youth Conservation Corps, Hosted programs, Job Corps, and Volunteer programs. This information will assist in the compilation of the Senior Youth and Volunteer Programs Report shared with Congress and other Federal agencies.

Description of Respondents: Individuals or households.

Number of Respondents: 77,500.

Frequency of Responses: Reporting: Yearly.

Total Burden Hours: 6,458.

Charlene Parker,

Departmental Information Collection Clearance Officer.

[FR Doc. 2010–28144 Filed 11–5–10; 8:45 am]

BILLING CODE 3410–11–P

DEPARTMENT OF AGRICULTURE

Submission for OMB Review; Comment Request

November 3, 2010.

The Department of Agriculture has submitted the following information collection requirement(s) to OMB for review and clearance under the Paperwork Reduction Act of 1995, Public Law 104–13. Comments regarding (a) Whether the collection of information is necessary for the proper performance of the functions of the agency, including whether the information will have practical utility; (b) the accuracy of the agency's estimate of burden including the validity of the methodology and assumptions used; (c) ways to enhance the quality, utility and clarity of the information to be collected; (d) ways to minimize the burden of the collection of information on those who are to respond, including through the use of appropriate automated, electronic, mechanical, or other technological collection techniques or other forms of information technology should be addressed to: Desk Officer for Agriculture, Office of Information and Regulatory Affairs, Office of Management and Budget (OMB), *OIRA_Submission@OMB.EOP.GOV* or fax (202) 395–5806 and to Departmental Clearance Office, USDA, OCIO, Mail Stop 7602, Washington, DC 20250–7602. Comments regarding these information collections are best assured of having their full effect if received within 30 days of this notification. Copies of the submission(s) may be obtained by calling (202) 720–8958.

An agency may not conduct or sponsor a collection of information unless the collection of information displays a currently valid OMB control number and the agency informs potential persons who are to respond to the collection of information that such persons are not required to respond to the collection of information unless it displays a currently valid OMB control number.

Food Safety and Inspection Service

Title: Procedures for the Notification of New Technology.

OMB Control Number: 0583–0127.

Summary of Collection: The Food Safety and Inspection Service (FSIS) has been delegated the authority to exercise

the functions of the Secretary as provided in the Federal Meat Inspection Act (FMIA) (21 U.S.C. 601 *et seq.*), the Poultry Products Inspection Act (PPIA) (21 U.S.C. 451 *et seq.*), and the Egg Products Inspection Act (EPIA) (21 U.S.C. 1031 *et seq.*). These statutes mandate that FSIS protect the public by ensuring that meat and poultry products are safe, wholesome, unadulterated, and properly labeled and packaged. FSIS established flexible procedures to actively encourage the development and use of new technologies in meat and poultry establishments and egg products plants. These new procedures will facilitate notification to the Agency of any new technology that is intended for use in meat and poultry establishments and egg products plants so that the Agency can decide whether the new technology requires a pre-use review. A pre-use review often includes an in-plant trail.

Need and Use of the Information: FSIS will collect information to determine if an in-plant trail is necessary, FSIS will request that the firm submit a protocol that is designed to collect relevant data to support the use of the new technology. To not collect this information would reduce the effectiveness of the meat, poultry, and egg products inspection program.

Description of Respondents: Business or other for-profit.

Number of Respondents: 175.

Frequency of Responses: Recordkeeping; Reporting: on occasion.

Total Burden Hours: 8,600.

Food Safety and Inspection Service

Title: Listeria Control for Ready-to-Eat Products.

OMB Control Number: 0583–0132.

Summary of Collection: The Food Safety and Inspection Service (FSIS) has been delegated the authority to exercise the functions of the Secretary as provided in the Federal Meat Inspection Act (FMIA) (21 U.S.C. 601 *et seq.*) and the Poultry Products Inspection Act (PPIA) (21 U.S.C. 451 *et seq*). These statutes mandate that FSIS protect the public by verifying that meat and poultry products are safe, wholesome, unadulterated, and properly labeled and packaged. FSIS is requiring that official establishments that produce certain ready-to-eat (RTE) meat and poultry products to take measures to prevent product adulteration by the pathogenic environmental contaminant *Listeria monocytogenes.* The regulations (9 CFR 430.4) particularly affect establishments that produce RTE meat and poultry products that are exposed to the environment after lethality treatments and that support the growth of *Listeria monocytogenes.* Establishments must employ one of four distinct methods found in the regulations. These establishments must share with FSIS data and information relevant to their controls for *Listeria monocytogenes.*

Need and Use of the Information: Official establishments that produce FTE meat and poultry products must annually furnish FSIS with information on the production volume of RTE products affected by the regulations and the control measures used by the establishments. The establishment must also provide an estimate of production volume by product type and regulatory control method used for the upcoming year. FSIS will use the information collected from the Production Information on Post-Lethality Exposed RTE Products form (FSIS 10,240–1) to help target resources and direct verification activities.

Description of Respondents: Business or other for-profit.

Number of Respondents: 2,129.

Frequency of Responses: Reporting: On occasion.

Total Burden Hours: 26,317.

Ruth Brown,

Departmental Information Collection Clearance Officer.

[FR Doc. 2010–28145 Filed 11–5–10; 8:45 am]

BILLING CODE 3410–DM–P

DEPARTMENT OF AGRICULTURE

Submission for OMB Review; Comment Request

November 3, 2010.

The Department of Agriculture has submitted the following information collection requirement(s) to OMB for review and clearance under the Paperwork Reduction Act of 1995, Public Law 104–13. Comments regarding (a) Whether the collection of information is necessary for the proper performance of the functions of the agency, including whether the information will have practical utility; (b) the accuracy of the agency's estimate of burden including the validity of the methodology and assumptions used; (c) ways to enhance the quality, utility and clarity of the information to be collected; (d) ways to minimize the burden of the collection of information on those who are to respond, including through the use of appropriate automated, electronic, mechanical, or other technological collection techniques or other forms of information technology should be addressed to: Desk Officer for Agriculture, Office of Information and Regulatory Affairs, Office of Management and Budget (OMB), *OIRA_Submission@OMB.EOP.GOV* or fax (202) 395–5806 and to Departmental Clearance Office, USDA, OCIO, Mail Stop 7602, Washington, DC 20250–7602. Comments regarding these information collections are best assured of having their full effect if received within 30 days of this notification. Copies of the submission(s) may be obtained by calling (202) 720–8958.

An agency may not conduct or sponsor a collection of information unless the collection of information displays a currently valid OMB control number and the agency informs potential persons who are to respond to the collection of information that such persons are not required to respond to the collection of information unless it displays a currently valid OMB control number.

Foreign Agricultural Service

Title: Export Sales of U.S. Agricultural Commodities.

OMB Control Number: 0551–0007.

Summary of Collection: The export sales reporting system provides commodity market participants with information about commodity export commitments, and is one means by which USDA seeks to insure fairness and soundness in commodity marketing. U.S. exports are required to report to the Foreign Agricultural Service (FAS) information on: (1) The quantity of a reportable commodity to be sold to a foreign buyer; (2) the country of destination; and (3) the marketing year of shipment. The authority to collect this information is found at 7 CFR Part 20 and the Agricultural Trade Act of 1978 (7 U.S.C. 5712).

Need and Use of the Information: The collected information is needed because it provides up-to-date market data for making rational export policy decisions to prevent market disruptions. FAS reports the information to the public so that all market participants can be aware of such sales and can evaluate the effects of exports on supply and demand estimates of production, prices, and sales. If the information is not collected, the Department would not be in compliance with the statutes and not fulfilling the objectives of the export sales reporting program.

Description of Respondents: Business or other for-profit.

Number of Respondents: 340.

Frequency of Responses: Reporting: Quarterly; Weekly.

Total Burden Hours: 42,947.

Foreign Agricultural Service

Title: CCC's Facility Guarantee Program (FGP).

OMB Control Number: 0551–0032.

Summary of Collection: Under the authority of 7 CFR part 1493, subpart C, the Facility Guarantee Program (FGP) offers credit guarantees to facilitate the financing of U.S. manufactured goods and services to improve or establish agriculture infrastructure in emerging markets. Sales under FGP are considered normal commercial sales. The Foreign Agricultural Service (FAS) will collect information in a letter format via mail or facsimile.

Need and Use of the Information: FAS will collect information to determine eligibility for FGP benefits and to ensure CCC that all participants have a business office in the U.S. and are not debarred or suspended from participating in government programs. FAS will use the application to determine a project's eligibility for FGP coverage and to determine the impact on U.S. agricultural trade. The information requested will provide CCC with adequate information to meet statutory requirements. If the information were not collected CCC would be unable to determine if export sales under the FGP would be eligible for coverage or if coverage conformed to program requirements.

Description of Respondents: Business or other for-profit.

Number of Respondents: 5.

Frequency of Responses: Recordkeeping; Reporting; On occasion.

Total Burden Hours: 329.

Ruth Brown,

Departmental Information Collection Clearance Officer.

[FR Doc. 2010–28137 Filed 11–5–10; 8:45 am]

BILLING CODE 3410–10–P

DEPARTMENT OF AGRICULTURE

Submission for OMB Review; Comment Request

November 3, 2010.

The Department of Agriculture has submitted the following information collection requirement(s) to OMB for review and clearance under the Paperwork Reduction Act of 1995, Public Law 104–13. Comments regarding (a) Whether the collection of information is necessary for the proper performance of the functions of the agency, including whether the information will have practical utility; (b) the accuracy of the agency's estimate of burden including the validity of the methodology and assumptions used; (c) ways to enhance the quality, utility and clarity of the information to be collected; (d) ways to minimize the burden of the collection of information on those who are to respond, including through the use of appropriate automated, electronic, mechanical, or other technological collection techniques or other forms of information technology should be addressed to: Desk Officer for Agriculture, Office of Information and Regulatory Affairs, Office of Management and Budget (OMB), *OIRA_Submission@OMB.EOP.GOV* or fax (202) 395–5806 and to Departmental Clearance Office, USDA, OCIO, Mail Stop 7602, Washington, DC 20250–7602. Comments regarding these information collections are best assured of having their full effect if received within 30 days of this notification. Copies of the submission(s) may be obtained by calling (202) 720–8681.

An agency may not conduct or sponsor a collection of information unless the collection of information displays a currently valid OMB control number and the agency informs potential persons who are to respond to the collection of information that such persons are not required to respond to the collection of information unless it displays a currently valid OMB control number.

Rural Business Service

Title: 7 CFR 4284–G, Rural Business Opportunity Grants.

OMB Control Number: 0570–0024.

Summary of Collection: The Rural Business Opportunity Grant (RBOG) program was authorized by section 741 of the Federal Agriculture Improvement and Reform Act of 1996, Public Law 104–127. 7 CFR 4284–G provides the detailed program regulations, as well as including application procedures and reporting requirements for grant recipients. The objective of the RBOG program is to promote sustainable economic development in rural areas. This purpose is achieved through grants made by the Rural Business Cooperative Service (RBS) to public and private non-profit organizations and cooperatives to pay costs of economic development planning and technical assistance for rural businesses.

Need and Use of the Information: The information collected is from grant applicants and grant recipients. Grantees should keep complete and accurate accounting records as evidence that the grant funds were used properly. The information is necessary for RBS to process applications in a responsible manner, make prudent program decisions, and effectively monitor the grantees' activities to ensure that funds obtained from the Government are used appropriately.

Description of Respondents: Not for-profit institutions; State, Local or Tribal Government.

Number of Respondents: 248.

Frequency of Responses: Recordkeeping: Reporting: On occasion; Quarterly; Monthly.

Total Burden Hours: 17,704.

Charlene Parker,

Departmental Information Collection Clearance Officer.

[FR Doc. 2010–28139 Filed 11–5–10; 8:45 am]

BILLING CODE 3410–XT–P

DEPARTMENT OF AGRICULTURE

Office of the Secretary

Notice of Appointment of Members to the National Agricultural Research, Extension, Education, and Economics Advisory Board

AGENCY: Research, Education, and Economics, USDA.

ACTION: Appointment of members.

SUMMARY: In accordance with the Federal Advisory Committee Act, 5 U.S.C. App 2, the United States Department of Agriculture announces the appointments made by the Secretary of Agriculture to 9 member positions of the National Agricultural Research, Extension, Education, and Economics Advisory Board.

DATES: Appointments by the Secretary of Agriculture are for a 1, 2, or 3-year term, effective October 1, 2010 until September 30, 2013.

ADDRESSES: National Agricultural Research, Extension, Education, and Economics Advisory Board; Research Extension, Education, and Economics Advisory Board Office, Room 3901, South Building, U.S. Department of Agriculture; STOP 3401; 1400 Independence Avenue, SW., Washington, DC 20250–2255.

FOR FURTHER INFORMATION CONTACT: J. Robert Burk, Executive Director, Research, Education, and Economics Advisory Board Office, Room 3901, South Building, U.S. Department of Agriculture, STOP: 0321, 1400 Independence Avenue, SW., Washington, DC 20250–0321. Telephone: 202–720–3684. Fax: 202–720–6199, or e-mail: *Robert.burk@ars.usda.gov.*

SUPPLEMENTARY INFORMATION: Section 802 of the Federal Agricultural Improvement and Reform Act of 1996 authorized the creation of the National

Agricultural Research, Extension, Education, Economics Advisory Board. The Board is composed of 25 members, each representing a specific category related to agriculture. The Board was first appointed in September 1996 and at the time one-third of the original members were appointed for one, two, and three-year term, respectively. Due to the staggered appointments, the terms for 8 of the 25 members expired September 2010. One additional member position was vacant. Each member is appointed by the Secretary of Agriculture to a specific category on the Board, including farming or ranching, food production and processing, forestry research, crop and animal science, land-grant institutions, non-land grant college or university with a historic commitment to research in the food and agricultural sciences, food retailing and marketing, rural economic development, and natural resource and consumer interest groups, among many others. Appointees by vacancy category of the 8 new members and 1 re-appointed member are as follows: Category F. "National Food Animal Science Society," Nancy M. Cox, Director, Kentucky Agricultural Experiment Station and Associate Dean for Research, University of Kentucky, Lexington, KY (re-appointment); Category G. "National Crop, Soil, Agronomy, Horticulture, or Weed," Robert W. Taylor, Dean, School of Agricultural and Environmental Sciences, Alabama A&M University, Normal, AL; Category K. "1862 Land-Grant Colleges and Universities," Milo J. Shult, Vice President for Agriculture, University of Arkansas Division of Agriculture, Little Rock, AR; Category L. "1890 Land-Grant Colleges and Universities, Chandra Reddy, Dean, School of Agriculture and Consumer Sciences, Tennessee State University; Category P. "American Colleges of Veterinary Medicine," Cyril R. Clark, Dean, College of Veterinary Medicine, Oregon State University, Corvallis, OR, Category T. "Rural Economic Development," Jeanette T. Ishii, Economic Development Coordinator, Fresno County Administrative Office, Fresno, CA; Category U. "National Consumer Interest Group," Rita W. Green, Family Resource Management Extension Agent, Mississippi State University, Grenada, MS; Category V. "National Forestry Group," Steven Daley-Laursen, Senior Executive to the President and Professor, Office of the President, University of Idaho, Moscow, ID; Category W. "National Conservation or Natural Resource Groups," Carrie L. Castille, Deputy Assistant Commissioner, Louisiana Department of Agriculture & Forestry, Baton Rouge, LA.

Done at Washington, DC, this 29th day of October 2010.

Catherine Woteki,

Under Secretary, Research, Education, and Economics.

[FR Doc. 2010–28147 Filed 11–5–10; 8:45 am]

BILLING CODE P

DEPARTMENT OF AGRICULTURE

Office of the Secretary

Solicitation for Membership to the Forestry Research Advisory Council

AGENCY: Office of the Secretary, USDA.

ACTION: Notice.

SUMMARY: In accordance with the Federal Advisory Committee Act, 5 U.S.C. app., the United States Department of Agriculture (USDA) announces solicitation for nominations to fill thirteen vacancies on the Forestry Research Advisory Council.

DATES: Nominations must be received on or before December 20, 2010. Send completed nomination packages to Daina Dravnieks Apple, Senior Staff Assistant, U.S. Forest Service; Research and Development, Forestry Research Advisory Council; U.S. Department of Agriculture; Mail Stop 1120; 1400 Independence Avenue, SW., Washington, DC 20250–1120, if sending by U.S Postal Service. For Express mail use 201 14th St., SW.; Mail Stop 1120; Washington, DC 20024.

FOR FURTHER INFORMATION CONTACT: Daina Dravnieks Apple, Senior Staff Assistant, U.S. Forest Service; Research and Development, Forestry Research Advisory Council; 202–205–1665.

SUPPLEMENTARY INFORMATION: Section 1441 (c) of the Agriculture and Food Act of 1981 requires the establishment of the Forestry Research Advisory Council to provide advice to the Secretary of Agriculture on accomplishing efficiently the purposes of the Act of October 10, 1962 (16 U.S.C. 582a, *et seq.*), known as the McIntire-Stennis Act of 1962. The Council also provides advice related to the Forest Service research program, authorized by the Forest and Rangeland Renewable Resources Research Act of 1978 (Pub. L. 95–307, 92 Stat. 353, as amended; 16 U.S.C. 1600 (note)). The Council is composed of 20 voting members from the following membership categories:

(1) Federal and State agencies concerned with developing and utilizing the Nation's forest resources, in particular committee membership, will include representation from the National Forest System and Forest and Range Experiment Station leaders, Forest Service;

(2) The forest industries. These are organizations involved in the management of forest lands for which timber production is a component;

(3) The forestry schools of the State certified eligible institutions, and State agricultural experiment stations; and

(4) Volunteer public groups concerned with forests and related natural resources.

The initial Council membership was appointed with staggered terms of 1, 2, and 3 years. As a result of the staggered appointments, the terms of some members will expire during December 2010. Nominations for a 3-year appointment for 13 vacant positions are sought. Nominees will be carefully reviewed for their broad expertise, leadership and relevancy to a membership category. Geographic balance and a balanced distribution among the categories are also important. Vacancies are as follows: Federal and State—3; Industry—3; Academic—3; and Voluntary organizations—4. Nominations for one individual who fits several of the categories or for more than one person who fits one category will be accepted. Please indicate the specific membership category for each nominee. Nominations are open to all individuals without regard for race, color, religion, sex, national origin, age, mental or physical handicap, marital status, or sexual orientation. Nominations are being solicited from universities, organizations, associations, societies, councils, federations, groups, and companies that represent a wide variety of forestry research interests throughout the country. Appointments will be made by the Secretary of Agriculture.

Each nominee must complete Form AD–755, Advisory Committee Membership Background Information (which can be obtained electronically from the USDA Chief Information Office at *http://www.ocio.usda.gov/forms/doc/AD–755.pdf* or from the contact person listed in the **FURTHER INFORMATION CONTACT** section of this notice) and will be vetted before selection. Send nominee's name, resume, and the completed Form AD–755 by U.S. mail to:

Daina Dravnieks Apple, Senior Staff Assistant, Forest Service Research and Development, Forestry Research Advisory Council; Mail Stop 1120; 1400 Independence Avenue, SW., Washington, DC 20250–1120. Nominations delivered by express mail or overnight courier service should be sent to: Daina Dravnieks Apple, Senior

Staff Assistant, USDA Forest Service; Research and Development, Forestry Research Advisory Council; 201 14th St., SW., Washington, DC 20024.

Dated: October 29, 2010.

Pearlie S. Reed,

Assistant Secretary for Administration.

[FR Doc. 2010–28173 Filed 11–5–10; 8:45 am]

BILLING CODE 3410–11–P

Department of Commerce

Secretarial India High Technology Business Development Mission; February 6–11, 2011

AGENCY: International Trade Administration, Department of Commerce.

SUMMARY: Secretary of Commerce Gary Locke will lead a senior-level business development trade mission to New Delhi, Mumbai and Bangalore, India, February 6–11, 2011. The overall focus of the trip will be commercial opportunities for U.S. companies, including joint ventures and export opportunities. In each city participants will have a market briefings followed by one-on-one appointments with potential buyers/partners and meetings with high level government officials.

DATES: Applications should be submitted to the Office of Business Liaison by November 30, 2010. Applications received after that date will be considered only if space and scheduling constraints permit.

Contact: Office of Business Liaison; Room 5062; Department of Commerce; Washington, DC 20230; Tel: (202) 482–1360; Fax: (202) 482–4054

SUPPLEMENTARY INFORMATION:

Mission Description: U.S. Secretary of Commerce Gary Locke will lead a senior-level U.S. business development mission to Delhi, Mumbai, and Bangalore from February 6–11, 2011 to discuss market development policies and promote U.S. exports in the following advanced industrial sectors: The civil nuclear, defense and security, civil aviation, and information and communications technology (ICT).

The mission will help U.S. companies already doing business in India increase their current level of exports and business interests, and it will focus on helping experienced U.S. exporters which have not yet done business in India enter the market in support of creating jobs in the United States. Participating firms will gain market information, make business and government contacts, solidify business strategies, and/or advance specific projects. In each of these important sectors, participating U.S. companies will meet with prescreened potential partners, agents, distributors, representatives, and licensees. The agenda will also include meetings with high-level national and local government officials, networking opportunities, country briefings, and seminars.

The delegation will be composed of 20–25 U.S. firms representing a cross-section of U.S. high technology industries. Representatives of the U.S. Trade and Development Agency (USTDA), the Export-Import Bank of the United States (Ex-Im) and the Overseas Private Investment Corporation (OPIC) will be invited to participate (as appropriate) to provide information and counseling on their programs, as they relate to the Indian market.

Commercial Setting: India's sustained economic growth of around 5.5 percent in 2009 and dynamic expansion in several of its regional markets has created wide and diverse business prospects for U.S. exporters and investors. With 2010 growth estimates hovering at about 9.7 percent, India remains one of the fastest growing, largest, and most dynamic economies in the world. The global economic downturn did not affect India to the same extent as the United States, though most Indian companies remain cautious about making large investments. Worldwide economic difficulties notwithstanding, U.S. multinationals are expanding and deepening their market penetration. U.S. firms with advanced and niche-market products and services are entering the market for the first time, or are replacing legacy distributors appointed in the slow-growth past with more capable and aggressive representatives. The recent rise of U.S. exports to India, the daily business press announcements, and the rapidly expanding demand for Commercial Service India matchmaking programs and due-diligence services all point to India being open for business.

In fact, the pace of the United States' trade and investment relationship with India is accelerating. In 2009, U.S. exports to India amounted to $16.4 billion. Advanced technologies, including aerospace, specialized materials, information and communications technologies, electronics and flexible manufacturing systems underpinned this growth. U.S. exports to India are up 24 percent through the first six months of 2010. India is expected to play a major role in the Obama Administration's National Export Initiative (NEI), which aims to double U.S. exports over the next five years. Commercial Service India, with its seven offices across India, is actively implementing the NEI on the ground and will assist U.S. firms across a range of sectors including, but not limited to civil nuclear energy, defense, civil aviation, defense and security, and ICT.

In terms of long-range economic forecasts, some major consulting companies project that more than 500 million people, a full 50 percent of the population, will enter India's middle class over the next 15 years. One noted firm expects India to have and sustain the fastest growing economy in the world in the next three to five years. Another well-known consultancy believes that India will become the 3rd largest economy in the world by 2032. India's "demographic dividend" (71 percent of the population is under the age of 35, and the median age is 25) will ensure that India retains strong production and knowledge-based competitiveness for many years to come. India necessitates multiple marketing efforts that address differing regional opportunities, standards, languages, cultural differences, and levels of economic development. Gaining access to India's markets requires careful analysis of consumer preferences, existing sales channels, and changes in distribution and marketing practices, all of which are continually evolving.

Industry Focus: The mission will focus on four industry sectors—civil nuclear, defense and security equipment/systems/services, civil aviation, and ICT. It is designed to take advantage of these four strategic growth sectors and advance the discussion of U.S. market access, regulatory, and export control issues.

Civil Nuclear: This mission would represent the first Department-led civil-nuclear event in five years to India. Industry assessments suggest the Indian nuclear power market in total is worth as much as $150 billion. In September 2009, the Government of India (GOI) officially designated two site locations for U.S. commercial nuclear technology. The Indian cabinet reserved sites at Mithi Virdi in Gujarat and at Kovada in Andhra Pradesh to host the U.S. "reactor parks." The U.S. government has worked closely with the GOI to implement the U.S.-India nuclear cooperation agreement. U.S. reactor companies are on track to do business in India's expanding civil nuclear sector which provides opportunities along the civil nuclear supply chain for small- and medium-size civil nuclear suppliers.

Defense and Security: Over the next three years, India is expected to procure more than $10 billion in state-of-the-art commercial and homeland security

technology products, solutions, and services for border protection, marine security, counter insurgency, city surveillance, intelligence infrastructure, and other critical security infrastructure needs. The United States and India are closely collaborating on homeland security through our five-pillared Strategic Dialogue and a Joint Working Group on Counter-Terrorism (CTJWG). This homeland security component of the CTJWG offers us a unique opportunity to integrate U.S. business into the bilateral partnership with India by creating a private sector-public sector advisory forum within the government-to-government CTJWG. It will focus on translating the policy cooperation and goodwill between the two countries into business opportunities and export growth for U.S. companies.

Civil Aviation: Currently ranked ninth in the global civil aviation market, India's rapidly growing aviation sector is expected to become one of the top five civil aviation markets in the world over the next five years. Domestic passenger travel grew by 22 percent to 25.7 million passengers between January-June 2010 compared with 21.1 million passengers in January-June 2009, with private airlines accounting for about 75 percent of the domestic aviation market. Both Boeing and Airbus forecast India's demand for aircraft to exceed 1,000 aircraft worth more than $130 billion over the next 20 years. To keep pace with this rapid expansion, the GOI is planning multibillion dollar infrastructure investments to handle an estimated 580 million passengers in the next five to seven years.

Cooperation between the U.S. and Indian Governments in civil aviation has grown steadily since the signing of the U.S.-India Open Skies Agreement in 2005. With the launch of the U.S.-India Aviation Cooperation Program (ACP) in 2007, the United States and India established a forum for unified communication between the GOI and U.S. public and private sectors active in India with the goal of identification and support of the GOI's civil aviation sector modernization priorities. Early in 2010, the GOI and the United States created the U.S.-India Aviation Security Working Group to increase close cooperation on mutual commercial and security interest. In March, 2010, the inaugural meeting of the U.S.-India High Technology Cooperation Group (HTCG) Civil Aviation Subcommittee was held in Washington, DC. Among the most important areas of agreement coming from the group's private sector and government-government sessions were formation of an Airport Infrastructure Working Group (AIWG) tasked with identifying ways to encourage increased U.S. private sector participation in India's airport development; agreement to increase information exchange on air traffic control (ATC) technology enabling modernization of India's ATC system; consideration of a civil aviation business development trade mission to India; and collaboration on the development of alternative aviation fuels. The inaugural meeting of the AIWG held on September 30 in New Delhi directly addressed the issue of facilitating U.S. private sector investment in India's $20 billion dollar civil airport infrastructure development market.

Information and Communications Technology: As part of India's economic transformation, ICT represents about 11 percent of India's GDP. Telecom is considered the fastest growing sector, with cellular connections that have surpassed 600 million (with an expectation of reaching 1 billion by 2015). Internet and broadband infrastructure plans are bold and are based on rapid growth projections. In the next five years, the Indian market will reach 500 million fixed-wire line Internet connections, with fixed broadband comprising 200 million of the connections. The rapid growth of India's ICT industry is generating massive, untapped opportunities for U.S. companies. India's software and services industry accounted for $59.6B in aggregated revenue in FY2008–09, and spending in these sectors is forecast to grow at over 17 percent year on year between 2010 and 2014.

Mission Stops:

New Delhi: New Delhi, India's capital, serves as the seat of the GOI and the government of the National Capital Territory of New Delhi. The city is known for its wide, tree-lined boulevards and is home to numerous national institutions and landmarks. The city's service sector has expanded due in part to the large skilled English-speaking workforce that has attracted many multinational companies. Key service industries include information technology, telecommunications, hotels, banking, media and tourism. Most U.S. companies, with offices in India, are either headquartered in New Delhi or have an active office in this city. U.S. trade associations such as the American Chamber of Commerce and the U.S. India Business Council and Indian trade associations, representing thousands of Indian companies, such as Confederation of Indian Industry (CII) and Federation of Indian Chambers of Commerce and Industry (FICCI) are also headquartered in New Delhi.

Bangalore: Bangalore, known as India's Silicon Valley, is renowned as India's hub for the aerospace/defense, IT and semiconductor sectors. The city also boasts the largest cluster of firms operating in the biotechnology sector. Many high tech U.S. companies such as Cisco, Intel, Motorola, and Texas Instruments, have their India headquarters in Bangalore. Additionally, some of India's leading companies and entrepreneurs, including members of the U.S.-India CEO Forum, are based in this city. As it is among the most cosmopolitan and well known cities in India, Bangalore is a leading destination for U.S. companies coming to India for the first time. The Mission will also overlap with the Aero India 2011 trade show in Bangalore. Aero India is organized by the Ministry of Defense of India and will include a large U.S. pavilion. The U.S. Department of Defense will also be participating in this show.

Mumbai: Mumbai, located in the state of Maharashtra, is the commercial and financial center of India. Mumbai is India's largest city and home to almost 20 million people, and many of India's industrial powerhouses are headquartered in the city, including Tata, Reliance, and Mahindra. Mumbai is also at the center of India's civil nuclear industry and U.S. nuclear firms are eagerly eyeing the Indian market. The region surrounding Mumbai has emerged as an industrial hub and several major U.S. corporations across a wide variety of sectors have established a presence in the region, including General Motors, Kellogg and John Deere. It is not an exaggeration to say that Mumbai is truly the Gateway of India, and U.S. firms interested in doing business in India should make a point to visit this city.

Mission Goals: This Business Development Mission to India will demonstrate the United States commitment to a sustained economic partnership with India. The mission will combine Secretarial level policy dialogue and business development for U.S. firms. The mission's purpose is to support participants as they construct a firm foundation for future business in India and specifically aims to:

- Assist in identifying potential partners and strategies for U.S. companies to gain access to the Indian market for high technology products and services.
- Provide an opportunity for participant's to be present for policy and regulatory framework discussions with India government officials and private sector representatives to advance U.S. market access interests in India.

• Confirm U.S. Government support for activities of U.S. business in India and to provide access to senior Indian government decision makers.

• Listen to the needs, suggestions and experience of individual participants so as to shape appropriate U.S. Government positions regarding India and U.S. business interests.

• Organize private and focused events with local business and association leaders capable of becoming partners and clients for U.S. firms as they develop their business in India.

• Assist development of competitive strategies and market access with high level information gathering from private and public-sector leaders.

Mission Scenario: During the High Technology Business Development Mission to India the participants will:

• Meet with high-level Indian government officials.

• Meet with prescreened potential partners, agents, distributors, representatives and licensees.

• Meet with representatives of the Chambers of Commerce, industry and trade associations.

• Attend briefings conducted by Embassy officials on the economic and commercial climates.

Receptions and other business events will be organized to provide mission participants with further opportunities to speak with local business and government representatives, as well as U.S. business executives living and working in the region.

Timetable:

New Delhi

Sunday–February 6

• Arrive New Delhi.

• Orientation/Briefing from U.S. Government trade finance agencies.

• Economic/Market Briefing by U.S. Embassy Officials.

• Welcome Dinner.

Monday–February 7

• Business Event/Briefing with Local Industry Representatives.

• High-level Government Meetings and Roundtables for Delegates.

• One-on-One Business Meetings for the Delegation.

• Reception Hosted by the U.S. Ambassador.

Tuesday–February 8

• One-on-One Business Meetings for the Delegation.

• Government and Industry Meetings.

• Late Afternoon Departure for Bangalore.

Bangalore

Wed.–February 9

• Meetings with Local Government Officials.

• Business Event/Briefing with Local Industry Representatives.

• One-on-One Business Meetings for the Delegation.

• Site Visit to U.S. Export-related Venture.

Thursday–February 10

• Morning Departure for Mumbai.

Mumbai

Thursday–February 10

• Arrive Mumbai.

• Economic/Market Briefing by U.S. Government Officials.

• Meetings with Local Government Officials.

• Business Event/Briefing with Local Industry Representatives.

• Reception Hosted by U.S. Consul General.

Friday–February 11

• One-on-One Business Meetings for the Delegation.

• Meetings with Senior Indian Industry and Government Officials.

• Closing Dinner.

• Mission Ends/Departure.

Participation Requirements: All parties interested in participating in the Secretarial India High Technology Business Development Mission must complete and submit an application package for consideration by the U.S. Department of Commerce. All applicants will be evaluated on their ability to meet certain conditions and best satisfy the selection criteria as outlined below. Approximately 20–25 companies will be selected from the applicant pool to participate in the mission.

Fees and Expenses: After a company has been selected to participate in the mission, a payment to the Department of Commerce in the form of a participation fee is required. The participation fee, based on 20 companies, will be $10,500 for large firms and $8,500 for a small or medium-sized enterprise (SME), which includes one principal representative.* The fee for each additional firm representative (large firm or SME) is $2,500.

Expenses for travel, lodging, some meals, and incidentals will be the responsibility of each mission participant.

Conditions for Participation: An applicant must submit a completed and signed mission application and supplemental application materials, including adequate information on the company's products and/or services, primary market objectives, and goals for participation. If the Office of Business Liaison receives an incomplete application, the Department of Commerce may either: Reject the application, request additional information/clarification, or take the lack of information into account when evaluating the applications.

Each applicant must also:

• Certify that the products and services it seeks to export through the mission are either produced in the United States, or, if not, marketed under the name of a U.S. firm and have at least fifty-one percent U.S. content. In cases where the U.S. content does not exceed fifty percent, especially where the applicant intends to pursue investment and major project opportunities, the following factors, often associated with U.S. ownership, may be considered in determining whether the applicant's participation in the trade mission is in the U.S. national interest:

• U.S. materials and equipment content;

• U.S. labor content;

• Repatriation of profits to the U.S. economy; and/or

• Potential for follow-on business that would benefit the U.S. economy;

• Certify that the export of the products and services that it wishes to export through the mission would be in compliance with U.S. export controls and regulations;

• Certify that it has identified to the Department of Commerce for its evaluation any business pending before the Department of Commerce that may present the appearance of a conflict of interest;

• Certify that it has identified any pending litigation (including any administrative proceedings) to which it is a party that involves the Department of Commerce; and

• Sign and submit an agreement that it and its affiliates (1) have not and will not engage in the bribery of foreign officials in connection with a company's/participant's involvement in this mission, and (2) maintain and enforce a policy that prohibits the bribery of foreign officials.

Selection Criteria for Participation: Selection will be based on the following criteria in decreasing order of importance:

• Consistency of company's products or services with the scope and desired outcome of the mission's goals;

• Suitability of a company's products or services to the Indian market and the

* An SME is defined as a firm with 500 or fewer employees or that otherwise qualifies as a small business under SBA regulations (*see http://www.sba.gov/services/contracting opportunities/sizestandardstopics/index.html*). Parent companies, affiliates, and subsidiaries will be considered when determining business size. The dual pricing schedule reflects the Commercial Service's user fee schedule that became effective May 1, 2008 (*see http://www.export.gov/newsletter/march2008/initiatives.html* for additional information).

likelihood of a participating company's increased exports to or business interests in India as a result of this mission;

- Demonstrated export experience in India and/or other foreign markets;
- Prior experience in public discussions, such as through conferences, business organizations, public/private entities, or academic fora, on policy issues related to market access for U.S. firms in India;
- Current or pending major project participation; and
- Rank/seniority of the designated company representative.

Additional factors, such as diversity of company size, type, location, and demographics, may also be considered during the review process.

Referrals from political organizations and any documents, including the application, containing references to partisan political activities (including political contributions) will be removed from an applicant's submission and not considered during the selection process.

Timeframe for Recruitment and Applications: Mission recruitment will be conducted in an open and public manner, including publication in the **Federal Register** posting on the Commerce Department trade mission calendar (*http://www.ita.doc.gov/doctm/tmcal.html*) and other Internet Web sites, press releases to general and trade media, direct mail, broadcast fax, notices by industry trade associations and other multiplier groups, and publicity at industry meetings, symposia, conferences, and trade shows. The Commerce Department's Office of Business Liaison and the International Trade Administration will explore and welcome outreach assistance from other interested organizations, including other U.S. Government agencies.

Recruitment for this mission will begin immediately upon approval. Applications can be completed on-line at the India High Technology Business Development Mission Web site at *http://www.trade.gov/IndiaMission2011* or can be obtained by contacting the U.S. Department of Commerce Office of Business Liaison (202–482–1360 or *IndiaMission2011@doc.gov*). The application deadline is Tuesday, November 30, 2010. Completed applications should be submitted to the Office of Business Liaison. Applications received after Tuesday, November 30, 2010 will be considered only if space and scheduling constraints permit.

General Information and Applications:

The Office of Business Liaison, 1401 Constitution Avenue, NW., Room 5062, Washington, DC 20230. Tel: 202–482–1360. Fax: 202–482–4054. E-mail: *IndiaMission2011@doc.gov.*

Clarance E. Burden,

US & FCS, Senior Budget Analyst, Commercial Service Trade Missions Program.

[FR Doc. 2010–28148 Filed 11–5–10; 8:45 am]

BILLING CODE 3510–FP–P

DEPARTMENT OF COMMERCE

National Oceanic and Atmospheric Administration

Proposed Information Collection; Comment Request; Office of Education Dr. Nancy Foster Scholarship Program

AGENCY: National Oceanic and Atmospheric Administration, Commerce.

ACTION: Notice.

SUMMARY: The Department of Commerce, as part of its continuing effort to reduce paperwork and respondent burden, invites the general public and other Federal agencies to take this opportunity to comment on proposed and/or continuing information collections, as required by the Paperwork Reduction Act of 1995.

DATES: Written comments must be submitted on or before January 7, 2011.

ADDRESSES: Direct all written comments to Diana Hynek, Departmental Paperwork Clearance Officer, Department of Commerce, Room 6616, 14th and Constitution Avenue, NW., Washington, DC 20230 (or via the Internet at *dHynek@doc.gov).*

FOR FURTHER INFORMATION CONTACT: Requests for additional information or copies of the information collection instrument and instructions should be directed to Priti Brahma, 301–713–9437 or *Priti.Brahma@noaa.gov.*

SUPPLEMENTARY INFORMATION:

I. Abstract

The proposed information collection is a reinstatement of a previous collection, with revisions in the requirements: a pre- and post-evaluation by participants, and a new application form.

The National Oceanic and Atmospheric Administration (NOAA) Office of Education (OEd) collects, evaluates and assesses student data and information for the purpose of selecting successful scholarship candidates, generating internal NOAA reports and articles to demonstrate the success of its program. The Dr. Nancy Foster Scholarship Program is available to graduate students pursuing masters and doctoral degrees in the areas of marine biology, oceanography and maritime archaeology. The OEd requires applicants to the Dr. Nancy Foster Scholarship Program to complete an application and to supply references (*e.g.,* from academic professors and advisors) in support of the scholarship application. Scholarship recipients are required to conduct a pre- and post-evaluation of their studies through the scholarship program to gather information about the level of knowledge, skills and behavioral changes that take place with the students before and after their program participation. The evaluation results support NOAA Office of National Marine Sanctuaries program performance measures. Scholarship recipients are also required to submit an annual progress report, a biographical sketch, and a photograph.

II. Method of Collection

All forms are electronic, and the primary methods of submittal are e-mail and Internet transmission. Approximately 1% of the application and reference forms may be mailed.

III. Data

OMB Control Number: 0648–0432.

Form Number: None.

Type of Review: Regular submission (reinstatement with change of a previously approved information collection).

Affected Public: Individuals or households.

Estimated Number of Respondents: 200.

Estimated Number of Annual Responses: 621.

Estimated Time per Response: Dr. Nancy Foster application form: 8 hours; Letter of Recommendation: 45 minutes; Bio/Photograph Submission: 1 hour; Annual Report: 1 hour, 30 minutes; and Evaluation: 15 minutes.

Estimated Total Annual Burden Hours: 1,919.

Estimated Total Annual Cost to Public: $4,000.

IV. Request for Comments

Comments are invited on: (a) Whether the proposed collection of information is necessary for the proper performance of the functions of the agency, including whether the information shall have practical utility; (b) the accuracy of the agency's estimate of the burden (including hours and cost) of the proposed collection of information; (c) ways to enhance the quality, utility, and clarity of the information to be collected; and (d) ways to minimize the burden of the collection of information on respondents, including through the

use of automated collection techniques or other forms of information technology.

Comments submitted in response to this notice will be summarized and/or included in the request for OMB approval of this information collection; they also will become a matter of public record.

Dated: November 2, 2010.

Gwellnar Banks,

Management Analyst, Office of the Chief Information Officer.

[FR Doc. 2010–28086 Filed 11–5–10; 8:45 am]

BILLING CODE P

DEPARTMENT OF COMMERCE

Foreign-Trade Zones Board

[Order No. 1719]

Expansion of Foreign-Trade Zone 70; Detroit, Michigan

Pursuant to its authority under the Foreign-Trade Zones Act of June 18, 1934, as amended (19 U.S.C. 81a–81u), the Foreign-Trade Zones Board (the Board) adopts the following Order:

Whereas, the Greater Detroit Foreign-Trade Zone, Inc., grantee of Foreign-Trade Zone 70, submitted an application to the Board for authority to expand FTZ 70 to include two sites in the Detroit, Michigan, area, adjacent to the Detroit Customs and Border Protection port of entry (FTZ Docket 14–2010, filed 2/24/2010);

Whereas, notice inviting public comment has been given in the **Federal Register** (75 FR 11514, 3/11/2010 and 75 FR 15679, 3/30/2010) and the application has been processed pursuant to the FTZ Act and the Board's regulations; and,

Whereas, the Board adopts the findings and recommendations of the examiner's report, and finds that the requirements of the FTZ Act and Board's regulations are satisfied, and that the proposal is in the public interest;

Now, therefore, the Board hereby orders:

The application to expand FTZ 70 is approved, subject to the FTZ Act and the Board's regulations, including Section 400.28.

Signed at Washington, DC, this 29th day of October 2010.

Ronald K. Lorentzen,

Deputy Assistant Secretary for Import Administration, Alternate Chairman, Foreign-Trade Zones Board.

Attest:

Andrew McGilvray,

Executive Secretary.

[FR Doc. 2010–28165 Filed 11–5–10; 8:45 am]

BILLING CODE P

DEPARTMENT OF COMMERCE

National Oceanic and Atmospheric Administration

RIN 0648–XZ91

National Saltwater Angler Registry Program Designation of Exempted States

AGENCY: National Marine Fisheries Service (NMFS), National Oceanic and Atmospheric Administration (NOAA), Commerce.

ACTION: Notice.

SUMMARY: NMFS has designated the states of Rhode Island, North Carolina, South Carolina, Georgia, Alabama, Mississippi, Washington, and Guam as exempted states for anglers, spear fishers and for-hire fishing vessels. NMFS has designated the state of Maryland as an exempted state for for-hire fishing vessels pursuant to 50 CFR 600.

DATES: The designation of the states as exempted states is effective on November 8, 2010.

ADDRESSES: Gordon C. Colvin, Fishery Biologist, NMFS ST–12453, 1315 East-West Highway, Silver Spring, MD 20910.

FOR FURTHER INFORMATION CONTACT: Gordon C. Colvin, Fishery Biologist; (301) 713–2367 x175; *e-mail: Gordon.Colvin@noaa.gov*

SUPPLEMENTARY INFORMATION: The final rule implementing the National Saltwater Angler Registry Program, 50 CFR Subpart P, was published in the **Federal Register** on December 30, 2008. The final rule requires persons who are angling, spear fishing or operating a for-hire fishing vessel in the U.S. Exclusive Economic Zone or for anadromous species to register annually with NOAA. However, persons who are licensed or registered by, or state residents who are not required to register or hold a license issued by, a state that is designated as an exempted state are not required to register with NOAA. The final rule sets forth the requirements for states to be designated as exempted states. Generally, exempted states must agree to provide to NMFS names, addresses, dates of birth and telephone numbers of the persons licensed or registered under a qualifying state license and/or registry program, or to provide catch and effort data from a qualifying regional survey of recreational fishing, and enter into a Memorandum of Agreement with NMFS to formalize the data reporting agreement.

NMFS has received proposals for providing license/registry and/or regional survey catch and effort data from the states listed below, has determined that the states' programs qualify for exempted state designation under the provisions of the final rule, and has entered into Memoranda of Agreement with each of the states. Therefore, pursuant to 50 CFR 600.1415(b)(3), notice is hereby given that the following states are designated as exempted states under 50 CFR Subpart P: Rhode Island, North Carolina, South Carolina, Georgia, Alabama, Mississippi, Washington, and Guam. Persons who hold a valid fishing license or registration issued by these exempted states for angling, spear fishing or operating a for-hire fishing vessel in tidal waters are not required to register with NOAA under 50 CFR 600.1405(b). Persons who are residents of these exempted states who are not required to hold a fishing license, or to be registered to fish under the laws of these exempted states, also are not required to register with NOAA. Further, pursuant to 50 CFR 600.1415(b)(3), notice is hereby given that the following state is designated as an exempted state only for for-hire fishing vessels: Maryland. Persons who hold a valid license or registration issued by this exempted state for operating a for-hire fishing vessel in tidal waters are not required to register with NOAA under 50 CFR 600.1405(b).

Dated: November 1, 2010.

Eric C. Schwaab,

Assistant Administrator for Fisheries, National Marine Fisheries Service.

[FR Doc. 2010–28058 Filed 11–5–10; 8:45 am]

BILLING CODE 3510–22–P

DEPARTMENT OF COMMERCE

National Oceanic and Atmospheric Administration

[File No. 15483]

RIN 0648–XX23

Marine Mammals

AGENCY: National Marine Fisheries Service (NMFS), National Oceanic and Atmospheric Administration (NOAA), Commerce.

ACTION: Notice; issuance of permit.

SUMMARY: Notice is hereby given that Bruce Mate, PhD, Oregon State University, Hatfield Marine Science Center, Newport, OR has been issued a permit to conduct research on marine mammals.

ADDRESSES: The permit and related documents are available for review upon written request or by appointment in the following office(s):

Permits, Conservation and Education Division, Office of Protected Resources, NMFS, 1315 East-West Highway, Room 13705, Silver Spring, MD 20910; phone (301) 713–2289; fax (301) 713–0376; and

Northwest Region, NMFS, 7600 Sand Point Way NE, BIN C15700, Bldg. 1, Seattle, WA 98115–0700; phone (206) 526–6150; fax (206) 526–6426.

FOR FURTHER INFORMATION CONTACT: Tammy Adams or Kristy Beard, (301) 713–2289.

SUPPLEMENTARY INFORMATION: On July 13, 2010, notice was published in the **Federal Register** (75 FR 39915) that a request for a permit to conduct research on gray whales (*Eschrictius robustus*) had been submitted by the above-named applicant. The requested permit has been issued under the authority of the Marine Mammal Protection Act of 1972, as amended (16 U.S.C. 1361 *et seq.*), the regulations governing the taking and importing of marine mammals (50 CFR part 216), the Endangered Species Act of 1973, as amended (ESA; 16 U.S.C. 1531 *et seq.*), and the regulations governing the taking, importing, and exporting of endangered and threatened species (50 CFR parts 222–226).

The permit authorizes takes of marine mammals by level B harassment during a study to evaluate the effectiveness of an underwater acoustic deterrent device at diverting gray whales migrating past the coast of central Oregon between January and mid-April away from the sound source. The permit also authorizes incidental level B harassment of harbor porpoise (*Phocoena phocoena*), Southern Resident and West Coast Transient killer whales (*Orcinus orca*), harbor seals (*Phoca vitulina*), California sea lions (*Zalophus californianus*), Eastern Distinct Population Segment Steller sea lions (*Eumetopias jubatus*), and Northern elephant seals (*Mirounga angustirostris*). The permit is valid for five years from the date of issuance.

In compliance with the National Environmental Policy Act of 1969 (42 U.S.C. 4321 *et seq.*), an environmental assessment (EA) was prepared analyzing the effects of the permitted activities on the human environment. Based on the analyses in the EA, NMFS determined that issuance of the permit would not significantly impact the quality of the human environment and that preparation of an environmental impact statement was not required. That determination is documented in a Finding of No Significant Impact (FONSI), signed on October 29, 2010.

As required by the ESA, issuance of this permit was based on a finding that such permit: (1) Was applied for in good faith; (2) will not operate to the disadvantage of such endangered species; and (3) is consistent with the purposes and policies set forth in section 2 of the ESA.

Dated: November 2, 2010.

P. Michael Payne,

Chief, Permits, Conservation and Education Division, Office of Protected Resources, National Marine Fisheries Service.

[FR Doc. 2010–28169 Filed 11–5–10; 8:45 am]

BILLING CODE 3510–22–P

DEPARTMENT OF COMMERCE

Foreign-Trade Zones Board

[Order No. 1721]

Reorganization of Foreign-Trade Zone 177 Under Alternative Site Framework; Mount Vernon/Evansville, Indiana

Pursuant to its authority under the Foreign-Trade Zones Act of June 18, 1934, as amended (19 U.S.C. 81a–81u), the Foreign-Trade Zones Board (the Board) adopts the following Order:

Whereas, the Board adopted the alternative site framework (ASF) in December 2008 (74 FR 1170, 01/12/09; correction 74 FR 3987, 01/22/09) as an option for the establishment or reorganization of general-purpose zones;

Whereas, the Ports of Indiana, grantee of Foreign-Trade Zone 177, submitted an application to the Board (FTZ Docket 27–2010, filed 4/22/2010) for authority to reorganize under the ASF with a service area of Vanderburgh, Dubois, Pike, Gibson, Knox, Daviess, Spencer, Warrick and Posey Counties, Indiana, adjacent to the Owensboro-Evansville Customs and Border Protection port of entry, and FTZ 177's existing Sites 1 through 4 would be categorized as magnet sites;

Whereas, notice inviting public comment was given in the **Federal Register** (75 FR 24570–24571, 5/5/2010) and the application has been processed pursuant to the FTZ Act and the Board's regulations; and,

Whereas, the Board adopts the findings and recommendations of the examiner's report, and finds that the requirements of the FTZ Act and Board's regulations are satisfied, and that the proposal is in the public interest;

Now, therefore, the Board hereby orders:

The application to reorganize FTZ 177 under the alternative site framework is approved, subject to the FTZ Act and the Board's regulations, including Section 400.28, to the Board's standard 2,000-acre activation limit for the overall general-purpose zone project, and to a five-year ASF sunset provision for magnet sites that would terminate authority for Sites 2, 3 and 4 if not activated by November 30, 2015.

Signed at Washington, DC, this 29th day of October 2010.

Ronald K. Lorentzen,

Deputy Assistant Secretary for Import Administration, Alternate Chairman, Foreign-Trade Zones Board.

Attest:

Andrew McGilvray,

Executive Secretary.

[FR Doc. 2010–28161 Filed 11–5–10; 8:45 am]

BILLING CODE P

DEPARTMENT OF COMMERCE

Foreign-Trade Zones Board

[Order No. 1720]

Reorganization of Foreign-Trade Zone 125 Under Alternative Site Framework; South Bend, Indiana

Pursuant to its authority under the Foreign-Trade Zones Act of June 18, 1934, as amended (19 U.S.C. 81a–81u), the Foreign-Trade Zones Board (the Board) adopts the following Order:

Whereas, the Board adopted the alternative site framework (ASF) in December 2008 (74 FR 1170, 01/12/09; correction 74 FR 3987, 01/22/09) as an option for the establishment or reorganization of general-purpose zones;

Whereas, the St. Joseph County Airport Authority, grantee of Foreign-Trade Zone 125, submitted an application to the Board (FTZ Docket

29–2010, filed 4/29/2010) for authority to reorganize under the ASF with a service area of St. Joseph, Elkhart, Kosciusko, Marshall, LaPorte and Starke Counties, Indiana, adjacent to the Chicago Customs and Border Protection port of entry, and FTZ 125's existing Sites 1 and 2 would be categorized as magnet sites;

Whereas, notice inviting public comment was given in the **Federal Register** (75 FR 25204, 5/7/2010) and the application has been processed pursuant to the FTZ Act and the Board's regulations; and,

Whereas, the Board adopts the findings and recommendations of the examiner's report, and finds that the requirements of the FTZ Act and Board's regulations are satisfied, and that the proposal is in the public interest;

Now, Therefore, the Board hereby orders:

The application to reorganize FTZ 125 under the alternative site framework is approved, subject to the FTZ Act and the Board's regulations, including Section 400.28, to the Board's standard 2,000-acre activation limit for the overall general-purpose zone project, and to a five-year ASF sunset provision for magnet sites that would terminate authority for Site 1 if not activated by November 30, 2015.

Signed at Washington, DC, this 29th day of October 2010.

Ronald K. Lorentzen,

Deputy Assistant Secretary for Import Administration, Alternate Chairman, Foreign-Trade Zones Board.

Attest:

Andrew McGilvray,

Executive Secretary.

[FR Doc. 2010–28163 Filed 11–5–10; 8:45 am]

BILLING CODE P

DEPARTMENT OF DEFENSE

Department of the Army, Corps of Engineers

Chetco River Gravel Mining Executive and Technical Teams; Notification of Availability of Documents.

AGENCY: U.S. Army Corps of Engineers, DoD.

ACTION: Notice.

SUMMARY: The U.S. Army Corps of Engineers (Corps) is making available to the public all work products of the Chetco River Gravel Mining Executive and Technical Teams. These work products consist of meeting agendas, meeting minutes, reports, and other documents related to the proposed Chetco River Gravel Mining Regional General Permit and the evaluation of commercial gravel mining activities in other river systems within the state of Oregon. These work products (and additional information concerning the proposed regional general permit) can be viewed at *http://www.nwp.usace.army.mil/regulatory/publicnotice.asp* under the heading "Chetco River gravel mining." The Corps is soliciting comments from the public on these documents. The Corps will consider these comments in the evaluation of whether to issue the Chetco River Gravel Mining Regional General Permit.

DATES: Written comments must be submitted by December 8, 2010.

ADDRESSES: You may submit comments by any of the following methods:

E-mail: judy.l.linton@usace.army.mil.

Mail: U.S. Army Corps of Engineers, Portland District (CENWP–OD–G), Attn: Ms. Judy Linton, P.O. Box 2946, Portland, Oregon 97208–2946.

FOR FURTHER INFORMATION CONTACT: Ms. Judy Linton, Project Manager, Portland District, Corps of Engineers, CENWP–OD–G, 333 SW First Avenue, P.O. Box 2946, Portland, Oregon 97208–2946, *phone:* (503) 808–4382 or *e-mail judy.l.linton@usace.army.mil.*

SUPPLEMENTARY INFORMATION: The Executive and Technical Teams were established in 2007 as part of an initiative to evaluate, on a watershed basis, commercial gravel mining within the state of Oregon. The teams consisted of representatives of the U.S. Army Corps of Engineers, Environmental Protection Agency, U.S. Fish & Wildlife Service, National Marine Fisheries Service, Oregon Department of State Lands, Oregon Department of Environmental Quality, Oregon Department of Land Conservation and Development, Oregon Department of Fish & Wildlife, and the Oregon Concrete and Aggregate Producers Association. Effective October 29, 2010, the Corps formally disbanded the Executive and Technical Teams prior to moving forward with the evaluation of the proposed Chetco River Gravel Mining Regional General Permit.

Dated: October 28, 2010.

Kevin P. Moynahan,

Chief, Regulatory Branch, Portland District.

[FR Doc. 2010–27895 Filed 11–5–10; 8:45 am]

BILLING CODE 3720–58–P

DEPARTMENT OF EDUCATION

Notice of Submission for OMB Review

AGENCY: Department of Education.

ACTION: Comment request.

SUMMARY: The Director, Information Collection Clearance Division, Regulatory Information Management Services, Office of Management invites comments on the submission for OMB review as required by the Paperwork Reduction Act of 1995 (Pub. L. 104–13).

DATES: Interested persons are invited to submit comments on or before December 8, 2010.

ADDRESSES: Written comments should be addressed to the Office of Information and Regulatory Affairs, Attention: Education Desk Officer, Office of Management and Budget, 725 17th Street, NW., Room 10222, New Executive Office Building, Washington, DC 20503, be faxed to (202) 395–5806 or emailed to *oira_submission@omb.eop.gov* with a cc: to *ICDocketMgr@ed.gov.* Please note that written comments received in response to this notice will be considered public records.

SUPPLEMENTARY INFORMATION: Section 3506 of the Paperwork Reduction Act of 1995 (44 U.S.C. Chapter 35) requires that the Office of Management and Budget (OMB) provide interested Federal agencies and the public an early opportunity to comment on information collection requests. The OMB is particularly interested in comments which: (1) Evaluate whether the proposed collection of information is necessary for the proper performance of the functions of the agency, including whether the information will have practical utility; (2) Evaluate the accuracy of the agency's estimate of the burden of the proposed collection of information, including the validity of the methodology and assumptions used; (3) Enhance the quality, utility, and clarity of the information to be collected; and (4) Minimize the burden of the collection of information on those who are to respond, including through the use of appropriate automated, electronic, mechanical, or other technological collection techniques or other forms of information technology.

Dated: November 3, 2010.

Darrin A. King,

Director, Information Collection Clearance Division, Regulatory Information Management Services, Office of Management.

Institute of Education Sciences

Type of Review: Revision.

Title of Collection: Trends in International Mathematics and Science

Study (TIMSS:11) and Progress in International Reading Literacy Study (PIRLS:11) Full-Scale Collection.

OMB Control Number: 1850–0645.

Agency Form Number(s): N/A.

Frequency of Responses: Annually.

Affected Public: Individuals or household; State, Local, or Tribal Government, State Educational Agencies or Local Educational Agencies.

Total Estimated Number of Annual Responses: 78,651.

Total Estimated Annual Burden Hours: 68,721.

Abstract: The Trends in International Mathematics and Science Study (TIMSS) 2011 and the Progress in International Reading Literacy Study (PIRLS) 2011 are coordinated by the International Association for the Evaluation of Educational Achievement. TIMSS is administered every four years in more than 60 countries and provides data for internationally benchmarking U.S. performance in mathematics and science at the fourth- and eighth-grade levels against other countries around the world. PIRLS is administered every five years in more than 50 countries and provides assessment data for internationally benchmarking U.S. performance in fourth-grade reading. The National Center for Education Statistics (NCES) conducted the international TIMSS and PIRLS field test in spring 2010 and received Office of Management and Budget (OMB) approval for full-scale school recruitment for the two studies (OMB # 1850–0645 v.6). In this submission, NCES seeks OMB approval to conduct TIMSS and PIRLS 2011 full-scale data collection in the United States in April–May 2011.

Requests for copies of the information collection submission for OMB review may be accessed from the RegInfo.gov Web site at *http://www.reginfo.gov/public/do/PRAMain* or from the Department's Web site at *http://edicsweb.ed.gov,* by selecting the "Browse Pending Collections" link and by clicking on link number 4442. When you access the information collection, click on "Download Attachments" to view. Written requests for information should be addressed to U.S. Department of Education, 400 Maryland Avenue, SW., LBJ, Washington, DC 20202–4537. Requests may also be electronically mailed to the Internet address *ICDocketMgr@ed.gov* or faxed to 202–401–0920. Please specify the complete title of the information collection and OMB Control Number when making your request.

Individuals who use a telecommunications device for the deaf (TDD) may call the Federal Information Relay Service (FIRS) at 1–800–877–8339.

[FR Doc. 2010–28142 Filed 11–5–10; 8:45 am]

BILLING CODE 4000–01–P

DEPARTMENT OF ENERGY

Federal Energy Regulatory Commission

[Docket No. PR10–80–001]

CenterPoint Energy—Illinois Gas Transmission Company; Notice of Baseline Filing

November 1, 2010.

Take notice that on October 28, 2010, CenterPoint Energy—Illinois Gas Transmission Company submitted a revised baseline filing of its Statement of Operating Conditions for services provided under section 311 of the Natural Gas Policy Act of 1978 (NGPA).

Any person desiring to participate in this rate proceeding must file a motion to intervene or to protest this filing must file in accordance with Rules 211 and 214 of the Commission's Rules of Practice and Procedure (18 CFR 385.211 and 385.214). Protests will be considered by the Commission in determining the appropriate action to be taken, but will not serve to make protestants parties to the proceeding. Any person wishing to become a party must file a notice of intervention or motion to intervene, as appropriate. Such notices, motions, or protests must be filed on or before the date as indicated below. Anyone filing an intervention or protest must serve a copy of that document on the Applicant. Anyone filing an intervention or protest on or before the intervention or protest date need not serve motions to intervene or protests on persons other than the Applicant.

The Commission encourages electronic submission of protests and interventions in lieu of paper using the "eFiling" link at *http://www.ferc.gov*. Persons unable to file electronically should submit an original and 7 copies of the protest or intervention to the Federal Energy Regulatory Commission, 888 First Street, NE., Washington, DC 20426.

This filing is accessible on-line at *http://www.ferc.gov*, using the "eLibrary" link and is available for review in the Commission's Public Reference Room in Washington, DC. There is an "eSubscription" link on the Web site that enables subscribers to receive e-mail notification when a document is added to a subscribed docket(s). For assistance with any FERC Online service, please e-mail *FERCOnlineSupport@ferc.gov*, or call (866) 208–3676 (toll free). For TTY, call (202) 502–8659.

Comment Date: 5 p.m. Eastern time on Tuesday, November 9, 2010.

Kimberly D. Bose,

Secretary.

[FR Doc. 2010–28124 Filed 11–5–10; 8:45 am]

BILLING CODE 6717–01–P

DEPARTMENT OF ENERGY

Federal Energy Regulatory Commission

[Docket No. RP11–1479–000]

BP Canada Energy Marketing Corp. Apache Corporation; Notice for Temporary Waivers

November 1, 2010.

Take notice that on October 29, 2010, BP Canada Energy Marketing Corp. and Apache Corporation filed with the Federal Energy Regulatory Commission a Joint Petition for temporary waivers of the Commission's capacity release regulations and policies along with the associated interstate pipeline transportation tariff provisions and a request for expedited action.

Any person desiring to intervene or to protest this filing must file in accordance with Rules 211 and 214 of the Commission's Rules of Practice and Procedure (18 CFR 385.211 and 385.214). Protests will be considered by the Commission in determining the appropriate action to be taken, but will not serve to make protestants parties to the proceeding. Any person wishing to become a party must file a notice of intervention or motion to intervene, as appropriate. Such notices, motions, or protests must be filed on or before 5 p.m. Eastern time on the specified comment date. Anyone filing a motion to intervene or protest must serve a copy of that document on the Petitioners. On or before the comment date, it is not necessary to serve motions to intervene or protests on persons other than the Petitioners.

The Commission encourages electronic submission of protests and interventions in lieu of paper using the "eFiling" link at *http://www.ferc.gov.* Persons unable to file electronically should submit an original and 14 copies of the protest or intervention to the Federal Energy Regulatory Commission, 888 First Street, NE., Washington, DC 20426.

This filing is accessible on-line at *http://www.ferc.gov,* using the "eLibrary" link and is available for

review in the Commission's Public Reference Room in Washington, DC. There is an "eSubscription" link on the Web site that enables subscribers to receive email notification when a document is added to a subscribed docket(s). For assistance with any FERC Online service, please e-mail *FERCOnlineSupport@ferc.gov,* or call (866) 208–3676 (toll free). For TTY, call (202) 502–8659.

Comment Date: 5 p.m.Eastern Time on Friday, November 5, 2010.

Kimberly D. Bose,

Secretary.

[FR Doc. 2010–28125 Filed 11–5–10; 8:45 am]

BILLING CODE 6717–01–P

FEDERAL RESERVE SYSTEM

Formations of, Acquisitions by, and Mergers of Bank Holding Companies

The companies listed in this notice have applied to the Board for approval, pursuant to the Bank Holding Company Act of 1956 (12 U.S.C. 1841 *et seq.*) (BHC Act), Regulation Y (12 CFR part 225), and all other applicable statutes and regulations to become a bank holding company and/or to acquire the assets or the ownership of, control of, or the power to vote shares of a bank or bank holding company and all of the banks and nonbanking companies owned by the bank holding company, including the companies listed below.

The applications listed below, as well as other related filings required by the Board, are available for immediate inspection at the Federal Reserve Bank indicated. The application also will be available for inspection at the offices of the Board of Governors. Interested persons may express their views in writing on the standards enumerated in the BHC Act (12 U.S.C. 1842(c)). If the proposal also involves the acquisition of a nonbanking company, the review also includes whether the acquisition of the nonbanking company complies with the standards in section 4 of the BHC Act (12 U.S.C. 1843). Unless otherwise noted, nonbanking activities will be conducted throughout the United States.

Unless otherwise noted, comments regarding each of these applications must be received at the Reserve Bank indicated or the offices of the Board of Governors not later than December 3, 2010.

A. FEDERAL RESERVE BANK OF NEW YORK (Ivan Hurwitz, Vice President) 33 Liberty Street, New York, New York 10045–0001:

1. *First Niagara Financial Group, Inc.,* Buffalo, New York; to acquire 100 percent of the voting shares of NewAlliance Bancshares, Inc., and thereby indirectly acquire voting shares of NewAlliance Bank, both of New Haven, Connecticut.

B. FEDERAL RESERVE BANK OF CHICAGO (Colette A. Fried, Assistant Vice President) 230 South LaSalle Street, Chicago, Illinois 60690–1414:

1. *Hometown Community Bancorp, Inc., Employee Stock Ownership Plan and Trust,* Morton, Illinois; to acquire additional voting shares, for a total of 35 percent of the voting shares, of Hometown Community Bancorp, Inc., and thereby indirectly acquire additional voting shares of Morton Community Bank, both of Morton, Illinois.

C. FEDERAL RESERVE BANK OF ST. LOUIS (Glenda Wilson, Community Affairs Officer) P.O. Box 442, St. Louis, Missouri 63166–2034:

1. *The First National Bank of Berryville Employee Stock Ownership Trust;* Berryville, Arkansas; to acquire an additional 6 percent of the voting shares of First Carroll Bankshares, Inc., and thereby indirectly acquire additional voting shares of The First National Bank of Berryville, both of Berryville, Arkansas.

Board of Governors of the Federal Reserve System, November 3, 2010.

Robert deV. Frierson,

Deputy Secretary of the Board.

[FR Doc. 2010–28126 Filed 11–5–10; 8:45 am]

BILLING CODE 6210–01–P

DEPARTMENT OF DEFENSE

GENERAL SERVICES ADMINISTRATION

NATIONAL AERONAUTICS AND SPACE ADMINISTRATION

[OMB Control No. 9000–0089; Docket No. 2010–0083; Sequence 29]

Information Collection; Request for Authorization of Additional Classification and Rate, Standard Form 1444

AGENCY: Department of Defense (DOD), General Services Administration (GSA), and National Aeronautics and Space Administration (NASA).

ACTION: Notice of request for public comments regarding a reinstatement to an existing OMB clearance.

SUMMARY: Under the provisions of the Paperwork Reduction Act of 1995 (44 U.S.C. Chapter 35), the Regulatory Secretariat will be submitting to the Office of Management and Budget (OMB) a request to review and approve a reinstatement of a previously approved information collection requirement concerning Request for Authorization of Additional Classification and Rate, Standard Form 1444.

DATES: Comments may be submitted on or before January 7, 2011.

ADDRESSES: Submit comments identified by Information Collection 9000–0089 by any of the following methods:

- *Regulations.gov: http://www.regulations.gov.* Submit comments via the Federal eRulemaking portal by inputting "Information Collection 9000–0089" under the heading "Enter Keyword or ID" and selecting "Search". Select the link "Submit a Comment" that corresponds with "Information Collection 9000–0089". Follow the instructions provided at the "Submit a Comment" screen. Please include your name, company name (if any), and "Information Collection 9000–0089" on your attached document.
- *Mail:* General Services Administration, Regulatory Secretariat (MVCB), 1275 First Street, NE., Washington, DC 20417. ATTN: Hada Flowers/IC 9000–0089.

Instructions: Please submit comments only and cite Information Collection 9000–0089, in all correspondence related to this collection. All comments received will be posted without change to *http://www.regulations.gov,* including any personal and/or business confidential information provided.

FOR FURTHER INFORMATION CONTACT: Mr. Ernest Woodson, Procurement Analyst, Contract Policy Branch, GSA, (202) 501–3775 or e-mail *ernest.woodson@gsa.gov.*

SUPPLEMENTARY INFORMATION:

A. Purpose

This regulation prescribes labor standards for federally financed and assisted construction contracts subject to the Davis-Bacon and Related Acts (DBRA), as well as labor standards for nonconstruction contracts subject to the Contract Work Hours and Safety Standards Act (CWHSSA).

The recordkeeping requirements in this regulation, 48 CFR ch. 1, section 22.406, are a restatement of requirements cleared under OMB control numbers 1215–0140, 1215–0149, and 1215–0017 for 29 CFR 5.5(a)(1)(i), 5.5(c), and 5.15 (records to be kept by employers under the Fair Labor Standards Act (FLSA), 29 CFR 516, which is the basic recordkeeping regulation for all the laws administered by the Wage and Hour Division of the

Employment Standards Administration).

48 CFR ch. 1, section 22.406–3, implements the recordkeeping and information collection requirements prescribed in 29 CFR 5.5(a)(1)(iii) cleared under OMB control number 1215–0140 (also prescribed at 48 CFR 22.406 under OMB control number 9000–0089), by providing SF 1444, Request for Authorization of Additional Classification and Rate, for the contractor and the Government to enter the recordkeeping and information collection data required by 29 CFR 5.5(a)(1)(ii) prior to transmitting the data to the Department of Labor.

This SF 1444 places no further burden on the contractor or the Government other than the information collection burdens already cleared by OMB for 29 CFR part 5.

B. Annual Reporting Burden

There is no burden placed on the public beyond that prescribed by the Department of Labor regulations.

Number of Respondents: 2599.

Responses per Respondent: 1.

Total Responses: 2599.

Average Burden Hours per Response: .5.

Total Burden Hours: 1300.

The burden hour is estimated to be time necessary for the contractor to prepare and submit the form.

Obtaining Copies of Proposals: Requester may obtain a copy of the justification from the General Services Administration, Regulatory Secretariat (MVCB), 1275 First Street, NE., Washington, DC 20417, telephone (202) 501–4755. Please cite OMB Control No. 9000–0089, Request for Authorization of Additional Classification and Rate, Standard Form 1444, in all correspondence.

Dated: November 2, 2010.

Edward C. Loeb,

Director, Acquisition Policy Division.

[FR Doc. 2010–28105 Filed 11–5–10; 8:45 am]

BILLING CODE 6820–34–P

DEPARTMENT OF HEALTH AND HUMAN SERVICES

[Document Identifier: OS–0990–New; 30-Day Notice]

Agency Information Collection Request; 30-Day Public Comment Request

AGENCY: Office of the Secretary, HHS.

In compliance with the requirement of section 3506(c)(2)(A) of the Paperwork Reduction Act of 1995, the Office of the Secretary (OS), Department of Health and Human Services, is publishing the following summary of a proposed collection for public comment. Interested persons are invited to send comments regarding this burden estimate or any other aspect of this collection of information, including any of the following subjects: (1) The necessity and utility of the proposed information collection for the proper performance of the agency's functions; (2) the accuracy of the estimated burden; (3) ways to enhance the quality, utility, and clarity of the information to be collected; and (4) the use of automated collection techniques or other forms of information technology to minimize the information collection burden.

To obtain copies of the supporting statement and any related forms for the proposed paperwork collections referenced above, e-mail your request, including your address, phone number, OMB number, and OS document identifier, to *Sherette.funncoleman@hhs.gov,* or call the Reports Clearance Office on (202) 690–5683. Send written comments and recommendations for the proposed information collections within 30 days of this notice directly to the OS OMB Desk Officer; faxed to OMB at 202–395–5806.

Proposed Project: Evaluation of Pregnancy Prevention Approaches: Implementation Study Data Collection—OMB No. 0990–New—Office of Adolescent Health (OAH).

Abstract: The Office of Adolescent Health (OAH), Office of Public Health and Science (OPHS), U.S. Department of Health and Human Services (HHS), is requesting OMB approval of a new collection. OAH is overseeing and coordinating adolescent pregnancy prevention evaluation efforts as part of the Teen Pregnancy Prevention Initiative. OAH is working collaboratively with the Office of the Assistant Secretary for Planning and Evaluation (ASPE), the Centers for Disease Control and Prevention (CDC), and the Administration for Children and Families (ACF) on adolescent pregnancy prevention evaluation activities.

OAH has provided funding to ACF to oversee the implementation of the Evaluation of Adolescent Pregnancy Prevention Approaches (PPA). PPA is a random assignment evaluation which will expand available evidence on effective ways to reduce teen pregnancy. The evaluation will document and test a range of pregnancy prevention approaches in up to eight program sites. The findings of the evaluation will be of interest to the general public, to policy-makers, and to organizations interested in teen pregnancy prevention.

OAH and ACF are proposing implementation data collection activity as part of the PPA evaluation. The proposed activity involves the collection of information from program records and site visits at two to three points in the program implementation period. Understanding the programs, documenting their implementation and context, and assessing fidelity of implementation will allow for description of each implemented program and the treatment-control contrast evaluated in each site. It will also help in interpreting impact findings, differences in impacts across programs, and differences in impacts across locations or population subgroups.

Respondents: Semi-structured individual and group interviews will be held with program developers, program leaders and staff, participating youths, school representatives, program partners, and other community members knowledgeable about related services for adolescents. All information will be collected by trained professional staff.

ESTIMATED ANNUALIZED BURDEN TABLE

Forms	Type of respondent	Annual number of respondents	Number of responses per respondent	Average burden hours per response	Total annual burden hours
Staff and community member interviews (Master Topic Guide).	Program staff and community members.	48	1	1.5	72
Guide for Discussion with Control Group Schools about Counterfactual.	Control group school staff	48	1	1	48

ESTIMATED ANNUALIZED BURDEN TABLE—Continued

Forms	Type of respondent	Annual number of respondents	Number of responses per respondent	Average burden hours per response	Total annual burden hours
Guide for Group Discussion with Frontline Staff.	Frontline Program Staff	48	1	1.5	72
Guide for Group Discussion with Participating Youths.	Participating Youth	216	1	1.5	324
Total					516

Seleda Perryman,

Office of the Secretary, Paperwork Reduction Act Clearance Officer.

[FR Doc. 2010–28149 Filed 11–5–10; 8:45 am]

BILLING CODE 4150–30–P

DEPARTMENT OF HEALTH AND HUMAN SERVICES

Administration for Children and Families

Proposed Information Collection Activity; Comment Request

Proposed Projects:

Title: State Plan Child Support Coll & Estab Paternity Title IV–D, OCSE–100.

OMB No.: 0970–0017.

Description: The Office of Child Support Enforcement has approved a IV–D state plan for each state. Federal regulations require states to amend their state plans only when necessary to reflect new or revised federal statutes or regulations or material change in any state law, organization, policy, or IV–D agency operations. The requirement for submission of a state plan and plan amendments for the Child Support Enforcement program is found in sections 452, 454, and 466 of the Social Security Act.

Respondents: State IV–D Agencies.

ANNUAL BURDEN ESTIMATES

Instrument	Number of respondents	Number of responses per respondent	Average burden hours per response	Total burden hours
State Plan	54	2	0.50	54
OCSE–21–U4.	54	2	0.25	27

Estimated Total Annual Burden Hours: 81.

In compliance with the requirements of section 506(c)(2)(A) of the Paperwork Reduction Act of 1995, the Administration for Children and Families is soliciting public comment on the specific aspects of the information collection described above. Copies of the proposed collection of information can be obtained and comments may be forwarded by writing to the Administration for Children and Families, Office of Administration, Office of Information Services, 370 L'Enfant Promenade, SW., Washington, DC 20447, Attn: ACF Reports Clearance Officer. E-mail address: *infocollection@acf.hhs.gov.* All requests should be identified by the title of the information collection.

The Department specifically requests comments on: (a) Whether the proposed collection of information is necessary for the proper performance of the functions of the agency, including whether the information shall have practical utility; (b) the accuracy of the agency's estimate of the burden of the proposed collection of information; (c) the quality, utility, and clarity of the information to be collected; and (d) ways to minimize the burden of the collection of information on respondents, including through the use of automated collection techniques or other forms of information technology. Consideration will be given to comments and suggestions submitted within 60 days of this publication.

Dated: November 2, 2010.

Robert Sargis,

Reports Clearance Officer.

[FR Doc. 2010–28104 Filed 11–5–10; 8:45 am]

BILLING CODE 4184–01–P

DEPARTMENT OF HEALTH AND HUMAN SERVICES

Health Resources and Services Administration

Agency Information Collection Activities: Submission for OMB Review; Comment Request

Periodically, the Health Resources and Services Administration (HRSA) publishes abstracts of information collection requests under review by the Office of Management and Budget (OMB), in compliance with the Paperwork Reduction Act of 1995 (44 U.S.C. Chapter 35). To request a copy of the clearance requests submitted to OMB for review, e-mail *paperwork@hrsa.gov* or call the HRSA Reports Clearance Office on (301) 443–1129.

The following request has been submitted to the Office of Management and Budget for review under the Paperwork Reduction Act of 1995:

Proposed Project: Bureau of Primary Health Care (BPHC) Uniform Data System (OMB Clearance No. 0915–0193)—Revision

The Uniform Data System (UDS) contains the annual reporting requirements for the cluster of primary care grantees funded by the Health Resources and Services Administration (HRSA). The UDS includes reporting requirements for grantees of the following primary care programs: Community Health Centers, Migrant Health Centers, Health Care for the Homeless, Public Housing Primary Care, and other grantees under Section 330. The authorizing statute is section 330 of

the Public Health Service Act, as amended.

HRSA collects data in the UDS which are used to ensure compliance with legislative mandates and to report to Congress and policymakers on program accomplishments. To meet these objectives, BPHC requires a core set of data collected annually that is appropriate for monitoring and evaluating performance and reporting on annual trends. The UDS will be revised in several ways. Certain data elements are added for staffing and utilization and for diagnoses, services, and tests. Specifications for current clinical measures are revised to align with those of national standard setting organizations. Revenue sources are updated to include new federal revenue sources. A limited number of questions are asked about Electronic Health Record (EHR) reporting capabilities. Also, a limited number of clinical measures will be added consistent with identified national priorities. These new measures are included in the UDS data collection request in order to allow advance time for health centers to change data collection systems.

ESTIMATES OF ANNUALIZED REPORTING BURDEN ARE AS FOLLOWS

Type of report	Number of respondents	Responses per respondent	Total responses	Hours per response	Total burden hours
Universal report	1,181	1	1,181	71	83,851
Grant report	328	1	328	18	5,904
Total	1,181		1,509		89,755

Written comments and recommendations concerning the proposed information collection should be sent within 30 days of this notice to the desk officer for HRSA, either by e-mail to: *OIRA_submission@omb.eop.gov* or by fax to 202–395–6974. Please direct all correspondence to the "attention of the desk officer for HRSA."

Dated: October 28, 2010.

Robert Hendricks,

Director, Division of Policy and Information Coordination.

[FR Doc. 2010–28091 Filed 11–5–10; 8:45 am]

BILLING CODE 4165–15–P

DEPARTMENT OF HEALTH AND HUMAN SERVICES

National Institutes of Health

National Cancer Institute; Notice of Meeting

Pursuant to section 10(d) of the Federal Advisory Committee Act, as amended (5 U.S.C. Appendix 2), notice is hereby given of the meeting of the National Cancer Advisory Board.

The meeting will be open to the public as indicated below, with attendance limited to space available. Individuals who plan to attend and need special assistance, such as sign language interpretation or other reasonable accommodations, should notify the Contact Person listed below in advance of the meeting.

A portion of the meeting will be closed to the public in accordance with the provisions set forth in section 552b(6), as amended. The discussions could disclose personal information concerning NCI Staff and/or its contractors, the disclosure of which would constitute a clearly unwarranted invasion of personal privacy.

Name of Committee: National Cancer Advisory Board.

Open: December 7, 2010, 9 a.m. to 4:30 p.m.

Agenda: Program reports and presentations; business of the Board.

Place: National Institutes of Health, 9000 Rockville Pike, Building 31, C Wing, 6th Floor, Conference Room 10, Bethesda, MD 20892.

Contact Person: Dr. Paulette S. Gray, Executive Secretary, National Cancer Institute, National Institutes of Health, 6116 Executive Boulevard, 8th Floor, Room 8001, Bethesda, MD 20892–8327, (301) 496–5147.

Name of Committee: National Cancer Advisory Board.

Closed: December 7, 2010, 4:30 p.m. to 5:30 p.m.

Agenda: Review intramural program site visit outcomes. Discussion of confidential personnel issues.

Place: National Institutes of Health, 9000 Rockville Pike, Building 31, C Wing, 6th Floor, Conference Room 10, Bethesda, MD 20892.

Contact Person: Dr. Paulette S. Gray, Executive Secretary, National Cancer Institute, National Institutes of Health, 6116 Executive Boulevard, 8th Floor, Room 8001, Bethesda, MD 20892–8327, (301) 496–5147.

Any interested person may file written comments with the committee by forwarding the statement to the Contact Person listed on this notice. The statement should include the name, address, telephone number and when applicable, the business or professional affiliation of the interested person.

In the interest of security, NIH has instituted stringent procedures for entrance onto the NIH campus. All visitor vehicles, including taxicabs, hotel, and airport shuttles will be inspected before being allowed on campus. Visitors will be asked to show one form of identification (for example, a government-issued photo ID, driver's license, or passport) and to state the purpose of their visit.

Information is also available on the Institute's/Center's home page: *deainfo.nci.nih.gov/advisory/ncab.htm,* where an agenda and any additional information for the meeting will be posted when available.

(Catalogue of Federal Domestic Assistance Program Nos. 93.392, Cancer Construction; 93.393, Cancer Cause and Prevention Research; 93.394, Cancer Detection and Diagnosis Research; 93.395, Cancer Treatment Research; 93.396, Cancer Biology Research; 93.397, Cancer Centers Support; 93.398, Cancer Research Manpower; 93.399, Cancer Control, National Institutes of Health, HHS)

Dated: November 2, 2010.

Jennifer S. Spaeth,

Director, Office of Federal Advisory Committee Policy.

[FR Doc. 2010–28152 Filed 11–5–10; 8:45 am]

BILLING CODE 4140–01–P

DEPARTMENT OF HEALTH AND HUMAN SERVICES

National Institutes of Health

Center for Scientific Review; Notice of Closed Meeting

Pursuant to section 10(d) of the Federal Advisory Committee Act, as amended (5 U.S.C. App.), notice is hereby given of the following meeting.

The meeting will be closed to the public in accordance with the provisions set forth in sections 552b(c)(4) and 552b(c)(6), Title 5 U.S.C., as amended. The grant applications and the discussions could disclose confidential trade secrets or commercial property such as patentable material, and personal information concerning individuals associated with the grant applications, the disclosure of which

would constitute a clearly unwarranted invasion of personal privacy.

Name of Committee: Center for Scientific Review Special Emphasis Panel; Member Conflict: AIDS and Clinical Epidemiology.

Date: November 23, 2010.

Time: 10 a.m. to 11:30 a.m.

Agenda: To review and evaluate grant applications.

Place: National Institutes of Health, 6701 Rockledge Drive, Bethesda, MD 20892, (Telephone Conference Call)

Contact Person: Mark P Rubert, PhD, Scientific Review Officer, Center for Scientific Review, National Institutes of Health, 6701 Rockledge Drive, Room 5218, MSC 7852, Bethesda, MD 20892, 301–435–1775, *rubertm@csr.nih.gov.*

This notice is being published less than 15 days prior to the meeting due to the timing limitations imposed by the review and funding cycle.

(Catalogue of Federal Domestic Assistance Program Nos. 93.306, Comparative Medicine; 93.333, Clinical Research, 93.306, 93.333, 93.337, 93.393–93.396, 93.837–93.844, 93.846–93.878, 93.892, 93.893, National Institutes of Health, HHS)

Dated: November 2, 2010.

Jennifer S. Spaeth,

Director, Office of Federal Advisory Committee Policy.

[FR Doc. 2010–28155 Filed 11–5–10; 8:45 am]

BILLING CODE 4140–01–P

DEPARTMENT OF HEALTH AND HUMAN SERVICES

National Institutes of Health

National Institute of Mental Health; Notice of Closed Meeting

Pursuant to section 10(d) of the Federal Advisory Committee Act, as amended (5 U.S.C. App.), notice is hereby given of the following meeting.

The meeting will be closed to the public in accordance with the provisions set forth in sections 552b(c)(4) and 552b(c)(6), Title 5 U.S.C., as amended. The grant applications and the discussions could disclose confidential trade secrets or commercial property such as patentable material, and personal information concerning individuals associated with the grant applications, the disclosure of which would constitute a clearly unwarranted invasion of personal privacy.

Name of Committee: National Institute of Mental Health Special Emphasis Panel; Dissertations.

Date: November 16, 2010.

Time: 10:30 a.m. to 12 p.m.

Agenda: To review and evaluate grant applications.

Place: National Institutes of Health, Neuroscience Center, 6001 Executive Boulevard, Rockville, MD 20852, (Telephone Conference Call).

Contact Person: Enid Light, PhD, Scientific Review Officer, Division of Extramural Activities, National Institute of Mental Health, NIH, Neuroscience Center, 6001 Executive Boulevard, Room 6132, MSC 9608, Bethesda, MD 20852–9608, 301–443–3599, *elight@mail.nih.gov.*

This notice is being published less than 15 days prior to the meeting due to the timing limitations imposed by the review and funding cycle.

(Catalogue of Federal Domestic Assistance Program Nos. 93.242, Mental Health Research Grants; 93.281, Scientist Development Award, Scientist Development Award for Clinicians, and Research Scientist Award; 93.282, Mental Health National Research Service Awards for Research Training, National Institutes of Health, HHS)

Dated: November 1, 2010.

Jennifer S. Spaeth,

Director, Office of Federal Advisory Committee Policy.

[FR Doc. 2010–28156 Filed 11–5–10; 8:45 am]

BILLING CODE 4140–01–P

DEPARTMENT OF HEALTH AND HUMAN SERVICES

National Institutes of Health

Eunice Kennedy Shriver National Institute of Child Health and Human Development; Notice of Closed Meeting

Pursuant to section 10(d) of the Federal Advisory Committee Act, as amended (5 U.S.C. App.), notice is hereby given of the following meeting.

The meeting will be closed to the public in accordance with the provisions set forth in sections 552b(c)(4) and 552b(c)(6), Title 5 U.S.C., as amended. The grant applications and the discussions could disclose confidential trade secrets or commercial property such as patentable material, and personal information concerning individuals associated with the grant applications, the disclosure of which would constitute a clearly unwarranted invasion of personal privacy.

Name of Committee: National Institute of Child Health and Human Development Special Emphasis Panel; Prospective Analysis of Autobiographical Memory with Structural Equation Modeling.

Date: November 23, 2010.

Time: 10 a.m. to 11 a.m.

Agenda: To review and evaluate grant applications.

Place: National Institutes of Health, 6100 Executive Boulevard, Rockville, MD 20852, (Telephone Assisted Conference).

Contact Person: Carla T. Walls, Ph.D., Scientific Review Officer, Division of Scientific Review, Eunice Kennedy Shriver National Institute of Child Health and Human Development, NIH, 6100 Executive Blvd., Room 5B01, Bethesda, MD 20892, 301–435–6898, *wallsc@mail.nih.gov.*

(Catalogue of Federal Domestic Assistance Program Nos. 93.864, Population Research; 93.865, Research for Mothers and Children; 93.929, Center for Medical Rehabilitation Research; 93.209, Contraception and Infertility Loan Repayment Program, National Institutes of Health, HHS)

Dated: November 2, 2010.

Jennifer S. Spaeth,

Director, Office of Federal Advisory Committee Policy.

[FR Doc. 2010–28154 Filed 11–5–10; 8:45 am]

BILLING CODE 4140–01–P

DEPARTMENT OF HEALTH AND HUMAN SERVICES

National Institutes of Health

National Institute of Mental Health; Notice of Meeting

Pursuant to section 10(a) of the Federal Advisory Committee Act, as amended (5 U.S.C. App.), notice is hereby given of a meeting of the Services Subcommittee of the Interagency Autism Coordinating Committee (IACC).

The Interagency Autism Coordinating Committee (IACC) Services Subcommittee will be holding a conference call on Monday, November 29, 2010. The subcommittee will discuss the IACC workshop on services and supports that was held on November 8, 2010 and begin work on a set of recommendations stemming from the workshop. This conference call will be open to the public.

Name of Committee: Interagency Autism Coordinating Committee (IACC)

Type of meeting: Services Subcommittee.

Date: November 29, 2010.

Time: 2 p.m. to 4 p.m. Eastern Time.

Agenda: To discuss the recommendations from the IACC workshop on services and supports that was held on November 8, 2010.

Place: No in-person meeting; conference call only.

Registration: No registration required.

Conference Call Access: Dial: 888–456–0356, Access code: 1427016.

Contact Person: Ms. Lina Perez, Office of Autism Research Coordination, National Institute of Mental Health, NIH, 6001 Executive Boulevard, NSC, 8185a, Rockville, MD 20852, Phone: 301–443–6040, E-mail: *IACCPublicInquiries@mail.nih.gov.*

Please Note: This conference call will be open to the public. Members of the public who participate using the conference call phone number will be able to listen to the discussion but will not be heard. If you

experience any technical problems with the conference call, please-mail *IACCTechSupport@acclaroresearch.com.*

Individuals who participate in person or by using these electronic services and who need special assistance, such as captioning of the conference call or other reasonable accommodations, should submit a request to the Contact Person listed on this notice at least 7 days prior to the meeting.

Meeting schedule subject to change.

Information about the IACC and a registration link for this meeting are available on the Web site: *http://www.iacc.hhs.gov.*

Dated: November 2, 2010.

Jennifer S. Spaeth,

Director, Office of Federal Advisory Committee Policy.

[FR Doc. 2010–28151 Filed 11–5–10; 8:45 am]

BILLING CODE 4140–01–P

DEPARTMENT OF HEALTH AND HUMAN SERVICES

Health Resources and Services Administration

Part C Early Intervention Services Grant

AGENCY: Health Resources and Services Administration (HRSA), HHS.

ACTION: Notice of non-competitive transfer of Part C funds from North General Hospital to the Institute for Family Health.

SUMMARY: HRSA will be transferring Ryan White HIV/AIDS Program, Part C funds as a Non-Competitive Replacement Award, to the Institute for Family Health in order to ensure continuity of critical HIV medical care and treatment services and avoid a disruption of HIV/AIDS clinical care to clients in East and Central Harlem, in New York City.

SUPPLEMENTARY INFORMATION:

Grantee of Record: North General Hospital.

Intended Recipient of the Award: The Institute for Family Health.

Amount of the Award: The Institute for Family Health will receive $577,174 of fiscal year (FY) 2010 funds to ensure ongoing clinical HIV/AIDS services for 12 months.

Authority: Section 2651 of the Public Health Service Act, 42 U.S.C. 300ff–51.

CFDA Number: 93.918.

Project Period: July 1, 2010, to June 30, 2011. The period of support for the Non-Competitive Replacement Award is from July 2, 2010, to June 30, 2011.

This service area will be included in the upcoming competition for the Part C HIV Early Intervention Services (EIS) competing application process for project periods starting July 1, 2011.

Justification for the Exception to Competition: Critical funding for HIV/AIDS medical care and treatment services to clients in East and Central Harlem of New York City will be continued through a Non-Competitive Replacement Award to the Institute for Family Health, as it has the fiscal and administrative infrastructure to administer the Part C Grant. This is a temporary Replacement Award as the previous grant recipient, North General Hospital, serving this population, notified HRSA that it could not continue providing services after July 2, 2010. North General Hospital identified the Institute for Family Health as the best qualified entity for this grant, since it operates 24 Federally Qualified Health Centers throughout New York and was granted a certificate of need on July 1, 2010, to cover ambulatory care services that were previously managed by North General Hospital at the same location. The Institute for Family Health can provide critical services with the least amount of disruption to the service population while the service area is re-competed.

FOR FURTHER INFORMATION CONTACT: Anna Huang, via e-mail *ahuang1@hrsa.gov,* or via telephone, 301–443–3995.

Dated: October 28, 2010.

Mary K. Wakefield,

Administrator.

[FR Doc. 2010–28090 Filed 11–5–10; 8:45 am]

BILLING CODE 4165–15–P

DEPARTMENT OF HOMELAND SECURITY

Federal Emergency Management Agency

[Docket ID: FEMA–2010–0039]

Agency Information Collection Activities: Submission for OMB Review; Comment Request, OMB No. 1660–0023; Effectiveness of a Community's Implementation of the NFIP Community Assistance Program CAC and CAV Reports

AGENCY: Federal Emergency Management Agency, DHS.

ACTION: Notice; 30-day notice and request for comments; revision of a currently approved information collection; OMB No. 1660–0023; FEMA Form 086–0–28 (formerly 81–69), Community Visit Report; and FEMA Form 086–0–29 (formerly 81–68), Community Contact Report.

SUMMARY: The Federal Emergency Management Agency (FEMA) has submitted the information collection abstracted below to the Office of Management and Budget for review and clearance in accordance with the requirements of the Paperwork Reduction Act of 1995. The submission describes the nature of the information collection, the categories of respondents, the estimated burden (*i.e.,* the time, effort and resources used by respondents to respond) and cost, and the actual data collection instruments FEMA will use.

DATES: Comments must be submitted on or before December 8, 2010.

ADDRESSES: Submit written comments on the proposed information collection to the Office of Information and Regulatory Affairs, Office of Management and Budget. Comments should be addressed to the Desk Officer for the Department of Homeland Security, Federal Emergency Management Agency, and sent via electronic mail to *oira.submission@omb.eop.gov* or faxed to (202) 395–5806.

FOR FURTHER INFORMATION CONTACT: Requests for additional information or copies of the information collection should be made to Director, Records Management Division, 1800 South Bell Street, Arlington, VA 20598–3005, facsimile number (202) 646–3347, or e-mail address *FEMA-Information-Collections-Management@dhs.gov.*

SUPPLEMENTARY INFORMATION:

Collection of Information

Title: Effectiveness of a Community's Implementation of the NFIP Community Assistance Program CAC and CAV Reports.

Type of information collection: Revision of a currently approved information collection.

OMB Number: 1660–0023.

Form Titles and Numbers: FEMA Form 086–0–28 (formerly FEMA Form 81–69), Community Visit Report; FEMA Form 086–0–29 (formerly FEMA Form 81–68), Community Contact Report.

Abstract: Through the use of a Community Assistance Contact (CAC) or Community Assistance Visit (CAV), FEMA can make a comprehensive assessment of a community's floodplain management program. Through this assessment, FEMA can assist the community to understand the National Flood Insurance Program's requirements, and implement effective flood loss reduction measures.

Communities can achieve cost savings through flood mitigation actions by way of insurance premium discounts and reduced property damage.

Affected Public: State, local or Tribal Government.

Estimated Number of Respondents: 3,000.

Frequency of Response: On Occasion.

Estimated Average Hour Burden per Respondent: 3 Hours.

Estimated Total Annual Burden Hours: 4,000 Hours.

Estimated Cost: There is no capital, start-up, operation or maintenance cost associated with this collection.

Dated: November 2, 2010.

Lesia M. Banks,

Director, Records Management Division, Mission Support Bureau, Federal Emergency Management Agency, Department of Homeland Security.

[FR Doc. 2010–28109 Filed 11–5–10; 8:45 am]

BILLING CODE 9110–12–P

DEPARTMENT OF HOMELAND SECURITY

Federal Emergency Management Agency

[Docket ID: FEMA–2010–0043]

Agency Information Collection Activities: Submission for OMB Review; Comment Request, OMB No. 1660–0029; Approval and Coordination of Requirements To Use the NETC Extracurricular for Training Activities

AGENCY: Federal Emergency Management Agency, DHS.

ACTION: Notice; 30-day notice and request for comments; revision of a currently approved information collection; OMB No. 1660–0029; FEMA Form 119–17–1 (formerly 75–10), Request for Housing Accommodations; and FEMA Form 119–17–2 (formerly 75–11), Request for Use of NETC Facilities.

SUMMARY: The Federal Emergency Management Agency (FEMA) has submitted the information collection abstracted below to the Office of Management and Budget for review and clearance in accordance with the requirements of the Paperwork Reduction Act of 1995. The submission describes the nature of the information collection, the categories of respondents, the estimated burden (*i.e.,* the time, effort and resources used by respondents to respond) and cost, and the actual data collection instruments FEMA will use.

DATES: Comments must be submitted on or before December 8, 2010.

ADDRESSES: Submit written comments on the proposed information collection to the Office of Information and Regulatory Affairs, Office of Management and Budget. Comments should be addressed to the Desk Officer for the Department of Homeland Security, Federal Emergency Management Agency, and sent via electronic mail to *oira.submission@omb.eop.gov* or faxed to (202) 395–5806.

FOR FURTHER INFORMATION CONTACT: Requests for additional information or copies of the information collection should be made to Director, Records Management Division, 1800 South Bell Street, Arlington, VA 20598–3005, facsimile number (202) 646–3347, or e-mail address *FEMA-Information-Collections-Management@dhs.gov.*

SUPPLEMENTARY INFORMATION:

Collection of Information

Title: Approval and Coordination of Requirements to Use the NETC Extracurricular for Training Activities.

Type of information collection: Revision of a currently approved information collection.

OMB Number: 1660–0029.

Form Titles and Numbers: FEMA Form 119–17–1 (formerly 75–10), Request for Housing Accommodations; and FEMA Form 119–17–2 (formerly 75–11), Request for Use of NETC Facilities.

Abstract: FEMA established the National Emergency Training Center (NETC), located in Emmitsburg, Maryland to offer training for the purpose of emergency preparedness. The NETC site has facilities and housing available for those participating in emergency preparedness. When training space and/or housing are required for those attending the training, a request for use of these areas must be made in advance and this collection provides the mechanism for such requests to be made.

Affected Public: Not-for-profit institutions; Federal Government; State, local or Tribal Government; individuals or households; farms; and business or other for-profit.

Estimated Number of Respondents: 60.

Frequency of Response: On Occasion.

Estimated Average Hour Burden per Respondent: 12 minutes.

Estimated Total Annual Burden Hours: 12 Hours.

Estimated Cost: There is no annual capital, start-up, operations or maintenance cost associated with this collection.

Dated: November 2, 2010.

Lesia M. Banks,

Director, Records Management Division, Mission Support Bureau, Federal Emergency Management Agency, Department of Homeland Security.

[FR Doc. 2010–28110 Filed 11–5–10; 8:45 am]

BILLING CODE 9111–45–P

DEPARTMENT OF HOUSING AND URBAN DEVELOPMENT

[Docket No. FR–5376–N–102]

Notice of Submission of Proposed Information Collection to OMB; Consolidated Public Housing Certification of Completion

AGENCY: Office of the Chief Information Officer, HUD.

ACTION: Notice.

SUMMARY: The proposed information collection requirement described below has been submitted to the Office of Management and Budget (OMB) for review, as required by the Paperwork Reduction Act. The Department is soliciting public comments on the subject proposal.

Public Housing Agencies (PHAs) certify to HUD that contract requirements and standards have been satisfied in a project development and HUD may authorize payment of funds due the contractor/developer. The Certification is submitted by a Public Housing Agency (PHA) to indicate to HUD that contract requirements have been satisfied for a specific project. The information is supplied by the project architect to assure the PHA and HUD that construction, which meets codes and HUD standards, has been incorporated into the project. Upon determining a proposed project is completed and that all contract requirements have been satisfied, HUD returns the certification to the PHA authorizing payment to the contractor.

DATES: *Comments Due Date:* December 8, 2010.

ADDRESSES: Interested persons are invited to submit comments regarding this proposal. Comments should refer to the proposal by name and/or OMB approval Number (2577–0021) and should be sent to: HUD Desk Officer, Office of Management and Budget, New Executive Office Building, Washington, DC 20503; fax: 202–395–5806. E-mail: *OIRA_Submission@omb.eop.gov.*

FOR FURTHER INFORMATION CONTACT: Colette Pollard, Reports Management Officer, QDAM, Department of Housing and Urban Development, 451 Seventh Street, SW., Washington, DC 20410;

e-mail Colette Pollard at *Colette.Pollard@hud.gov* or telephone (202) 402–3400. This is not a toll-free number. Copies of available documents submitted to OMB may be obtained from Ms. Pollard.

SUPPLEMENTARY INFORMATION: This notice informs the public that the Department of Housing and Urban Development has submitted to OMB a request for approval of the Information collection described below. This notice is soliciting comments from members of the public and affecting agencies concerning the proposed collection of information to: (1) Evaluate whether the proposed collection of information is necessary for the proper performance of the functions of the agency, including whether the information will have practical utility; (2) Evaluate the accuracy of the agency's estimate of the burden of the proposed collection of information; (3) Enhance the quality, utility, and clarity of the information to be collected; and (4) Minimize the burden of the collection of information on those who are to respond; including through the use of appropriate automated collection techniques or other forms of information technology, *e.g.,* permitting electronic submission of responses.

This notice also lists the following information:

Title of Proposal: Consolidated Public Housing Certification of Completion.

OMB Approval Number: 2577–0021.

Form Numbers: None.

Description of the Need for the Information and Its Proposed Use: Public Housing Agencies (PHAs) certify to HUD that contract requirements and standards have been satisfied in a project development and HUD may authorize payment of funds due the contractor/developer. The Certification is submitted by a Public Housing Agency (PHA) to indicate to HUD that contract requirements have been satisfied for a specific project. The information is supplied by the project architect to assure the PHA and HUD that construction, which meets codes and HUD standards, has been incorporated into the project. Upon determining a proposed project is completed and that all contract requirements have been satisfied, HUD returns the certification to the PHA authorizing payment to the contractor.

Frequency of Submission: On occasion.

	Number of respondents	Annual responses	×	Hours per response	=	Burden hours
Reporting Burden	58	1		1		58

Total Estimated Burden Hours: 58.

Status: Revision of a currently approved collection.

Authority: Section 3507 of the Paperwork Reduction Act of 1995, 44 U.S.C. 35, as amended.

Dated: November 2, 2010.

Colette Pollard,

Departmental Reports Management Officer, Office of the Chief Information Officer.

[FR Doc. 2010–28167 Filed 11–5–10; 8:45 am]

BILLING CODE 4210–67–P

DEPARTMENT OF HOUSING AND URBAN DEVELOPMENT

[Docket No. FR–5376–N–101]

Notice of Submission of Proposed Information Collection to OMB; Public Housing Capital Fund Financing

AGENCY: Office of the Chief Information Officer, HUD.

ACTION: Notice.

SUMMARY: The proposed information collection requirement described below has been submitted to the Office of Management and Budget (OMB) for review, as required by the Paperwork Reduction Act. The Department is soliciting public comments on the subject proposal.

Each year Congress appropriates funds to approximately 3,200 Public Housing Authorities (PHAs) for modernization, development, financing, and management improvements. The funds are allocated based on a complex formula. The forms in this collection are used to appropriately disburse and utilize the funds provided to PHAs. Additionally, these forms provide the information necessary to approve a financing transaction in addition to any Mixed-Finance and Capital Fund Financing transactions. Respondents include the approximately 3,200 PHA receiving Capital Funds and any other PHAs wishing to pursue financing.

DATES: *Comments Due Date: December 8, 2010.*

ADDRESSES: Interested persons are invited to submit comments regarding this proposal. Comments should refer to the proposal by name and/or OMB approval Number (2577–0157) and should be sent to: HUD Desk Officer, Office of Management and Budget, New Executive Office Building, Washington, DC 20503; fax: 202–395–5806. E-mail: *OIRA_Submission@omb.eop.gov.*

FOR FURTHER INFORMATION CONTACT: Colette Pollard, Reports Management Officer, QDAM, Department of Housing and Urban Development, 451 Seventh Street, SW., Washington, DC 20410; e-mail Colette Pollard at *Colette.Pollard@hud.gov* or telephone (202) 402–3400. This is not a toll-free number. Copies of available documents submitted to OMB may be obtained from Ms. Pollard.

SUPPLEMENTARY INFORMATION: This notice informs the public that the Department of Housing and Urban Development has submitted to OMB a request for approval of the Information collection described below. This notice is soliciting comments from members of the public and affected agencies concerning the proposed collection of information to: (1) Evaluate whether the proposed collection of information is necessary for the proper performance of the functions of the agency, including whether the information will have practical utility; (2) Evaluate the accuracy of the agency's estimate of the burden of the proposed collection of information; (3) Enhance the quality, utility, and clarity of the information to be collected; and (4) Minimize the burden of the collection of information on those who are to respond; including through the use of appropriate automated collection techniques or other forms of information technology, *e.g.,* permitting electronic submission of responses.

This notice also lists the following information:

Title of Proposal: Public Housing Capital Fund Financing.

OMB Approval Number: 2577–0157.

Form Numbers: HUD–50029, HUD–50030, HUD–5084, HUD–5087, HUD–51000, HUD–51001, HUD–51002.

http://portal.hud.gov/portal/page/portal/HUD/program_offices/administration/hudclips/forms.

Description of the Need for the Information and Its Proposed Use:

Each year Congress appropriates funds to approximately 3,200 Public Housing Authorities (PHAs) for modernization, development, financing, and management improvements. The funds are allocated based on a complex formula. The forms in this collection are

used to appropriately disburse and utilize the funds provided to PHAs. Additionally, these forms provide the information necessary to approve a financing transaction in addition to any Mixed-Finance and Capital Fund Financing transactions. Respondents include the approximately 3,200 PHA receiving Capital Funds and any other PHAs wishing to pursue financing.

Frequency of Submission: On occasion, Monthly, Annually, Other per Transaction.

	Number of respondents	Annual responses	×	Hours per response	=	Burden hours
Reporting Burden	3,105	23.460		4.497		327,590

Total Estimated Burden Hours: 327,590.

Status: Revision of a currently approved collection.

Authority: Section 3507 of the Paperwork Reduction Act of 1995, 44 U.S.C. 35, as amended.

Dated: November 2, 2010.

Colette Pollard,

Departmental Reports Management Officer, Office of the Chief Information Officer.

[FR Doc. 2010–28168 Filed 11–5–10; 8:45 am]

BILLING CODE 4210–67–P

DEPARTMENT OF HOUSING AND URBAN DEVELOPMENT

[Docket No. FR–5456–N–01]

Notice of Certain Operating Cost Adjustment Factors for 2011

AGENCY: Office of the Assistant Secretary for Housing—Federal Housing Commissioner, HUD.

ACTION: Notice.

SUMMARY: This notice establishes, for 2011, operating cost adjustment factors (OCAFs). OCAFs are annual factors used to adjust Section 8 rents renewed under section 524 of the Multifamily Assisted Housing Reform and Affordability Act of 1997 (MAHRA).

DATES: *Effective Date:* February 11, 2011.

FOR FURTHER INFORMATION CONTACT: Stan Houle, Housing Program Manager, Office of Housing Assistance and Grant Administration, Department of Housing and Urban Development, 451 7th Street, SW., Washington, DC 20410; telephone number 202–402–2572 (this is not a toll-free number). Hearing- or speech-impaired individuals may access this number through TTY by calling the toll-free Federal Information Relay Service at 800–877–8339.

SUPPLEMENTARY INFORMATION:

I. OCAFs

Section 514(e)(2) of MAHRA requires HUD to establish guidelines for rent adjustments based on an OCAF. The statute requiring HUD to establish OCAFs for LIHPRHA projects and projects with contract renewals or adjustments under section 524 of MAHRA is similar in wording and intent. HUD has therefore developed a single factor to be applied uniformly to all projects utilizing OCAFs as the method by which renewal rents are established or adjusted.

LIHPRHA projects are low-income housing projects insured by the Federal Housing Administration (FHA). LIHPRHA projects are primarily low-income housing projects insured under section 221(d)(3) below-market interest rate (BMIR) and section 236 of the National Housing Act, respectively. Both categories of projects have low-income use restrictions that have been extended beyond the 20-year period specified in the original documents, and both categories of projects also receive assistance under section 8 of the U.S. Housing Act of 1937 to support the continued low-income use.

Additionally, MAHRA gives HUD broad discretion in setting OCAFs—referring, for example, in sections 524(a)(4)(C)(i), 524(b)(1)(A), 524(b)(3)(A) and 524(c)(1) simply to "an operating cost adjustment factor established by the Secretary." The sole limitation to this grant of authority is a specific requirement in each of the foregoing provisions that application of an OCAF "shall not result in a negative adjustment." Contract rents are adjusted by applying the OCAF to that portion of the rent attributable to operating expenses exclusive of debt service.

OCAFs for FY2008, FY2009, and FY2010 were calculated as average percentage changes in OCAF-covered operating costs using FHA Annual Financial Statement (AFS) data. Unit-weighted, project-level operating cost percentage changes were calculated at the State level using the most recent two years of data available. Three years of experience with this method have revealed the following weaknesses:

- The relatively common practice of expensing major repairs and improvements in a single year produces large percentage changes in project operating costs when compared with the previous or subsequent years. These projects have a disproportionate impact on the OCAFs calculated, which occurs even when what would normally be considered a large percentage of the highest and lowest changes are excluded.
- Because there are variations in projects that submit AFS from year to year, a different set of projects is used to calculate OCAFs for each of the past three years. It has been found that the multiplicative sum of annual estimates calculated in this manner differs significantly from results based on changes for the same group of projects over a given time interval.
- The project-weighted percentage change method has been found to have an upward bias. This normally occurs because one-time large expense increases followed by a similar dollar decrease are not off-setting when calculated as percentages.

Because of these problems, for FY2011 HUD is reverting to the pre-FY2008 methodology with limited changes that are subsequently noted. The Department continues to be interested in using actual FHA data for cost component categories, and it may make additional adjustments in the coming years based on further analysis.

FY 2011 OCAFs are calculated as the sum of weighted average cost changes for wages, employee benefits, property taxes, insurance, supplies and equipment, fuel oil, electricity, natural gas, and water/sewer/trash using publicly available indices. The weights used in the pre-FY2008 OCAF calculations for each of the nine cost component groupings have been updated using current percentages attributable to each of the nine expense categories. Average expense proportions were calculated using the most recent three years of audited Annual Financial Statements from projects covered by OCAFs. The expenditure percentages for these nine categories have been found to be very stable over time, but using three years of data increases their stability. The nine cost component weights were calculated at the state level, which is the lowest level of geographical aggregation at which there is enough projects to permit statistical analysis. No data were available for the Western Pacific Islands,

so data for Hawaii were used as the best available indicator of OCAFs for these areas.

The best current price data sources for the nine cost categories were used in calculating annual change factors. State-level data for fuel oil, electricity, and natural gas from Department of Energy surveys are relatively current and continue to be used. Data on changes in employee benefits, insurance, property taxes, and water/sewer/trash costs are only available at the national level and also remain unchanged from the pre-2008 methodology. Although State level data on wages is available through BLS's Quarterly Covered Employment and Wage survey (QCEW), it is not used here because of the lag in availability and because QCEW wage changes include both the change in wages and the change in job classifications. Instead, HUD continues to use national Employment Cost Index (ECI) data on wage changes. Consumer Price Index data on goods and equipment have replaced a similar Producer Price Index (PPI) measure, because the PPI excluded the large percentage of such items that were not domestically produced. The data sources for the nine cost indicators selected used were as follows:

- *Labor Costs*—First quarter, 2010 Bureau of Labor Statistics (BLS) ECI, Private Industry Wages and Salaries, All Workers (Series ID CIU2030000000000I) at the National Level.
- *Property Taxes*—2008–2009 Census Quarterly Summary of State and Local Government Tax Revenue—Table 1. Annual taxes are computed as the total of four quarters of tax receipts. Total annual taxes are then divided by number of households to arrive at average annual tax per household. Number of households is taken from the estimates program at the Bureau of the Census. *http://www.census.gov/popest/housing/HU-EST2009.html*
- *Goods, Supplies, Equipment:* April 2009 to April 2010 Bureau of Labor Statistics (BLS) Consumer Price Index, All Items Less Food, Energy and shelter (Series ID CUUR0000SA0L12E) at the national level.
- *Insurance:* April 2009 to April 2010 Bureau of Labor Statistic (BLS) Consumer Price Index, Tenants and Household Insurance Index (Series ID CUUR0000SEHD) at the national level.
- *Fuel Oil:* Energy Information Agency, 2008 to 2009 Retail Price of No. 2 Fuel Oil to Residential Consumers cents per gallon excluding taxes. Department of Energy multi-state fuel oil grouping averages used for the States with insufficient fuel oil consumption to have separate estimates. *http://www.eia.gov/dnav/pet/pet_sum_mkt_a_EPD2_PRT_cpgal_a.htm.*
- *Electricity:* Energy Information Agency, March 2010 "Electric Power Monthly" report, Table 5.6.B. *http://www.eia.doe.gov/cneaf/electricity/epm/epm_sum.html.*
- *Natural Gas:* Energy Information Agency, Natural Gas, Residential Energy Price, 2008–2009 annual prices in dollars per 1,000 cubic feet at the state level. *http://www.eia.doe.gov/dnav/ng/ng_pri_sum_a_EPG0_PRS_DMcf_a.htm.*
- *Water and Sewer:* April 2009 to April 2010 Consumer Price Index, All Urban Consumers, Water and Sewer and Trash Collection Services (Series ID CUUR0000SEHG) at the national level.

The sum of the nine cost component percentage weights equals 100 percent of operating costs for purposes of OCAF calculations. To calculate the OCAFs, state-level cost component weights developed from AFS data are multiplied by the selected inflation factors. For instance, if wages in Virginia comprised 50 percent of total operating cost expenses and increased by 4 percent from 2008 to 2009, the wage increase component of the Virginia OCAF for 2011 would be 2.0 percent (50% * 4%). This 2.0 percent would then be added to the increases for the other eight expense categories to calculate the 2006 OCAF for Virginia. FY 2011 OCAFs are included as an Appendix to this Notice.

II. MAHRA and LIHPRHA OCAF Procedures

MAHRA, as amended, created the Mark-to-Market Program to reduce the cost of federal housing assistance, enhance HUD's administration of such assistance, and ensure the continued affordability of units in certain multifamily housing projects. Section 524 of MAHRA authorizes renewal of Section 8 project-based assistance contracts for projects without restructuring plans under the Mark-to-Market Program, including projects that are not eligible for a restructuring plan and those for which the owner does not request such a plan. Renewals must be at rents not exceeding comparable market rents except for certain projects. As an example, for Section 8 Moderate Rehabilitation projects, other than single room occupancy projects (SROs) under the McKinney-Vento Homeless Assistance Act (42 U.S.C. 11301 *et seq.*), that are eligible for renewal under section 524(b)(3) of MAHRA, the renewal rents are required to be set at the lesser of: (1) The existing rents under the expiring contract, as adjusted by the OCAF; (2) fair market rents (less any amounts allowed for tenant-purchased utilities); or (3) comparable market rents for the market area.

LIHPRHA (see, in particular, section 222(a)(2)(G)(i), 12 U.S.C. 4112(a)(2)(G) and the regulations at 24 CFR. 248.145(a)(9)) requires that future rent adjustments for LIHPRHA projects be made by applying an annual factor, to be determined by HUD to the portion of project rent attributable to operating expenses for the project and, where the owner is a priority purchaser, to the portion of project rent attributable to project oversight costs.

III. Findings and Certifications

Environmental Impact

This issuance sets forth rate determinations and related external administrative requirements and procedures that do not constitute a development decision affecting the physical condition of specific project areas or building sites. Accordingly, under 24 CFR 50.19(c)(6), this notice is categorically excluded from environmental review under the National Environmental Policy Act of 1969 (42 U.S.C. 4321).

Catalog of Federal Domestic Assistance Number

The Catalog of Federal Domestic Assistance Number for this program is 14.187.

Dated: November 2, 2010.

David H. Stevens,

Assistant Secretary for Housing-Federal Housing Commissioner.

Appendix

Operating Cost Adjustment Factors for 2011

Alabama	2.4
Alaska	1.1
Arizona	2.6
Arkansas	2.1
California	1.8
Colorado	1.7
Connecticut	0.1
Delaware	1.5
District of Columbia	1.7
Florida	2.7
Georgia	2.2
Hawaii	0.0
Idaho	3.0
Illinois	0.1
Indiana	2.0
Iowa	1.7
Kansas	2.2
Kentucky	2.2
Louisiana	0.8
Maine	0.0
Maryland	2.2
Massachusetts	1.6
Michigan	2.2
Minnesota	1.1
Mississippi	2.1
Missouri	1.9
Montana	0.4
Nebraska	1.8

Nevada	2.8
New Hampshire	1.3
New Jersey	1.8
New Mexico	1.1
New York	0.3
North Carolina	2.4
North Dakota	1.3
Ohio	2.1
Oklahoma	1.4
Oregon	2.6
Pacific Islands	0.0
Pennsylvania	2.0
Puerto Rico	2.1
Rhode Island	1.1
South Carolina	2.5
South Dakota	0.5
Tennessee	2.5
Texas	1.9
Utah	2.4
Vermont	0.6
Virgin Islands	3.0
Virginia	2.4
Washington	2.7
West Virginia	3.2
Wisconsin	1.7
Wyoming	1.9
U.S. Average	1.7

[FR Doc. 2010–28170 Filed 11–5–10; 8:45 am]

BILLING CODE 4210–67–P

DEPARTMENT OF THE INTERIOR

Bureau of Indian Affairs

Indian Gaming

AGENCY: Bureau of Indian Affairs, Interior.

ACTION: Notice of Approved Tribal-State Compact Amendment.

SUMMARY: This notice publishes approval of the 2010 Amendments to the Red Cliff Band of Lake Superior Chippewas ("Tribe") and the State of Wisconsin Gaming Compact of 1991, as Amended in 1999 and 2003.

DATES: *Effective Date:* November 8, 2010.

FOR FURTHER INFORMATION CONTACT: Paula L. Hart, Director, Office of Indian Gaming, Office of the Deputy Assistant Secretary—Policy and Economic Development, Washington, DC 20240, telephone: (202) 219–4066.

SUPPLEMENTARY INFORMATION: Under section 11 of the Indian Gaming Regulatory Act of 1988 (IGRA), Public Law 100–497, 25 U.S.C. 2710, the Secretary of the Interior shall publish in the **Federal Register** notice of approved Tribal-State compacts for the purpose of engaging in Class III gaming activities on Indian lands. This Amendment allows the Tribe to obtain financing through an "Indian tribe," as well as federally or state-chartered financial institutions.

Dated: November 2, 2010.

Larry Echo Hawk,

Assistant Secretary—Indian Affairs.

[FR Doc. 2010–28187 Filed 11–5–10; 8:45 am]

BILLING CODE 4310–4N–P

DEPARTMENT OF THE INTERIOR

Bureau of Land Management

[LLMT–06000–01–L10200000–PG0000]

Notice of Public Meeting; Central Montana Resource Advisory Council

AGENCY: Bureau of Land Management, Interior.

ACTION: Notice of public meeting.

SUMMARY: In accordance with the Federal Land Policy and Management Act and the Federal Advisory Committee Act of 1972, the U.S. Department of the Interior, Bureau of Land Management (BLM) Central Montana Resource Advisory Council (RAC) will meet as indicated below.

DATES: The meeting will be held December 7 and 8, 2010. The December 7 meeting will begin at 10 a.m. with a 30-minute public comment period and will adjourn at 5:30 p.m. The December 8 meeting will begin at 8 a.m. with a 30-minute public comment period and will adjourn at 3 p.m.

ADDRESSES: The meeting will be in the Calvert Hotel (216 7th Av. South) in Lewistown, Montana.

SUPPLEMENTARY INFORMATION: This 15-member council advises the Secretary of the Interior on a variety of management issues associated with public land management in Montana. During these meetings the council will participate in/discuss/act upon these topics: RAC comments and discussions; new member orientation; welcome for the new Montana/Dakotas State Director; the Plains and Prairie Potholes Landscape Conservation Cooperative; District Managers' updates; discussion about operating a successful RAC; the 2010 RAC workplan accomplishments; the 2011 RAC workplan input and decisions; OHV enforcement problems and fines for violators; potential new partnerships with stakeholders; the Monument Update Newsletter; the Limekiln project and the Rocky Mountain Elk Foundation Stewardship program; and administrative details.

All RAC meetings are open to the public. The public may present written comments to the RAC. Each formal RAC meeting will also have time allocated for hearing public comments. Depending on the number of persons wishing to comment and time available, the time for individual oral comments may be limited.

FOR FURTHER INFORMATON CONTACT: Gary L. "Stan" Benes, Lewistown Field Manager, Lewistown Field Office, 920 NE Main, Lewistown, MT 59457, (406) 538–1900.

Phillip C. Perlewitz,

Acting State Director, Montana/Dakotas BLM.

[FR Doc. 2010–28179 Filed 11–5–10; 8:45 am]

BILLING CODE 4310–DN–P

INTERNATIONAL TRADE COMMISSION

[Investigation Nos. 731–TA–1092–1093 (Final)]

Diamond Sawblades and Parts Thereof From China and Korea

Determination

On the basis of the record [1] developed in the subject investigation, the United States International Trade Commission (Commission) determines, pursuant to section 735(b) of the Tariff Act of 1930 (19 U.S.C. 1673d(b)) (the Act), that an industry in the United States is threatened with material injury by reason of imports from China and Korea of diamond sawblades and parts thereof, provided for in subheading 9202.39.00 of the Harmonized Tariff Schedule of the United States,[2] that have been found by the Department of Commerce (Commerce) to be sold in the United States at less than fair value (LTFV).[3]

Background

On May 3, 2005, the Commission instituted these investigations, following receipt of a petition filed with the Commission and Commerce by the Diamond Sawblades Manufacturers Coalition (DSMC) and its individual members, which included Blackhawk Diamond, Inc., Fullerton, CA;[4] Diamond B, Inc., Santa Fe Springs, CA; Diamond Products, Elyria, OH; Dixie Diamond, Lilburn, GA; Hoffman Diamond, Punxsutawney, PA; Hyde Manufacturing, Southbridge, MA;

[1] The record is defined in sec. 207.2(f) of the Commission's Rules of Practice and Procedure (19 CFR 207.2(f)).

[2] When packaged together as a set for retail sale with an item that is separately classified under heading 8202 to 8205 of the HTS, diamond sawblades or parts thereof may be imported under HTS heading 8206.

[3] Chairman Okun and Commissioners Lane and Pearson dissent, having determined that an industry in the United States is not materially injured or threatened with material injury by reason of LTFV imports of diamond sawblades and parts thereof from China and Korea.

[4] Blackhawk Diamond ceased operations in January 2006.

Sanders Saws, Honey Brook, PA; Terra Diamond, Salt Lake City, UT; and Western Saw, Inc., Oxnard, CA.

On June 20, 2006, the Commission determined, by a vote of 4 to 2, that a U.S. industry was not materially injured or threatened with material injury by reason of imports of diamond sawblades and parts thereof from China and Korea.[5] Notice of those determinations was published on July 11, 2006. 71 FR 39128. The Commission transmitted its determinations to the Secretary of Commerce on June 30, 2006. The Commission's views were contained in USITC Publication 3862 (July 2006), entitled *Diamond Sawblades and Parts Thereof from China and Korea,* Investigation No. 731–TA–1092–1093 (Final).

Petitioner DSMC appealed the Commission's negative final determinations to the U.S. Court of International Trade ("CIT"). On February 6, 2008, the CIT remanded the determinations to the Commission for further proceedings, having found that certain findings of the Commission were not supported by substantial evidence. *Diamond Sawblades Manufacturers Coalition* v. *United States,* Slip Op. 08–18 (Ct. Int'l Trade 2007) ("*Sawblades I*"). On remand, the Commission determined, by a vote of 3 to 3, that a U.S. industry was threatened with material injury by reason of imports of subject imports of diamond sawblades and parts thereof from China and Korea.[6] Pursuant to 19 U.S.C. 1677(11), the tie vote is considered an affirmative determination of the Commission.

On January 13, 2009, the CIT affirmed the Commission's affirmative determinations on remand. *Diamond Sawblades Manufacturers Coalition* v. *United States,* Slip Op. 09–05 (Ct. Int'l Trade 2009) ("*Sawblades II*"). On January 22, 2009, the Commission notified Commerce of the Court's decision, stating that it was a decision "not in harmony with" with the Commission's original negative determinations. As required by 19 U.S.C. 1516a(c) and *Timken Company* v. *United States,* 893 F.2d 337 (Fed. Cir. 1990), Commerce published notice of the CIT's decision and suspended liquidation for entries of the subject merchandise after the effective date of the Timken notice until the end of all appellate proceedings. *Notice of Court Decision Not In Harmony,* 74 FR 6570 (Feb. 10, 2009). The Commission did not publish notice of its remand determinations at that time because the remand determinations would, under the statute, only become its final determinations upon conclusion of all appellate proceedings in the action. 19 U.S.C. 1516a(c) & (e); 28 U.S.C. § 2643(c); *Co-Steel Raritan, Inc.* v. *U.S. International Trade Commission,* 357 F.3d 1294, 1302, n.3, & 1304–05 (Fed. Cir. 2004); *Hosiden Corp.* v. *United States,* 85 F.3d 589, 590–91 (Fed. Cir. 1996); *Timken,* 893 F.2d at 339–340.

On March 13, 2009, respondent parties Saint Gobain Abrasives, Inc. and Ehwa Diamond Industrial Co., Ltd. appealed the decisions in *Sawblades I* and *Sawblades II* to the U.S. Court of Appeals for the Federal Circuit ("Federal Circuit"). On July 6, 2010, the Federal Circuit affirmed the CIT's decision in *Sawblades I* and *Sawblades II. Diamond Sawblades Manufacturers Coalition* v. *United States,* 2009–1274, –1275 (Fed. Cir. 2010). No party applied to the U.S. Supreme Court for a *writ of certiorari* for that decision.

Since the deadline for filing a writ of certiorari to the Supreme Court has expired, all appellate proceedings relating to the merits of the Commission's determinations have ended. *Fujitsu General America, Inc.* v. *United States,* 283 F.3d 1364, 1379 (Fed. Cir. 2002). Accordingly, the Commission publishes notice of its final determinations in the antidumping investigations of diamond sawblades and parts thereof from China and Korea.

By order of the Commission.
Issued: November 2, 2010.

Marilyn R. Abbott,
Secretary to the Commission.

[FR Doc. 2010–28153 Filed 11–5–10; 8:45 am]

BILLING CODE 7020–02–P

[5] Commissioners Aranoff and Hillman dissented, having determined that an industry in the United States was threatened with material injury by reason of LTFV imports of diamond sawblades and parts thereof from China and Korea.

[6] Chairman Aranoff, who dissented in the original negative determination, and Commissioners Williamson and Pinkert, who had commenced their service as Commissioners in the intervening time, voted in the affirmative. On remand, Vice Chairman Pearson and Commissioners Okun and Lane voted in the negative.

INTERNATIONAL TRADE COMMISSION

[Inv. No. 337–TA–745]

In the Matter of Certain Wireless Communication Devices, Portable Music and Data Processing Devices, Computers and Components Thereof; Notice of Investigation

AGENCY: U.S. International Trade Commission.

ACTION: Institution of investigation pursuant to 19 U.S.C. 1337.

SUMMARY: Notice is hereby given that a complaint was filed with the U.S. International Trade Commission on October 6, 2010, under section 337 of the Tariff Act of 1930, as amended, 19 U.S.C. 1337, on behalf of Motorola Mobility, Inc., Libertyville, Illinois. The complaint alleges violations of section 337 based upon the importation into the United States, the sale for importation, and the sale within the United States after importation of certain wireless communication devices, portable music and data processing devices, computers and components thereof by reason of infringement of certain claims of U.S. Patent No. 6,272,333 ("the '333 patent"); U.S. Patent No. 6,246,862 ("the '862 patent"); U.S. Patent No. 6,246,697 ("the "697 patent"); U.S. Patent No. 5,359,317 ("the '317 patent"); U.S. Patent No. 5,636,223 ("the "223 patent"); and U.S. Patent No. 7,751,826 ("the "826 patent"). The complaint further alleges that an industry in the United States exists as required by subsection (a)(2) of section 337.

The complainant requests that the Commission institute an investigation and, after the investigation, issue an exclusion order and a cease and desist order.

ADDRESSES: The complaint, except for any confidential information contained therein, is available for inspection during official business hours (8:45 a.m. to 5:15 p.m.) in the Office of the Secretary, U.S. International Trade Commission, 500 E Street, SW., Room 112, Washington, DC 20436, telephone 202–205–2000. Hearing impaired individuals are advised that information on this matter can be obtained by contacting the Commission's TDD terminal on 202–205–1810. Persons with mobility impairments who will need special assistance in gaining access to the Commission should contact the Office of the Secretary at 202–205–2000. General information concerning the Commission may also be obtained by accessing its internet server at *http://www.usitc.gov.* The public record for this investigation may be viewed on the Commission's electronic docket (EDIS) at *http://edis.usitc.gov.*

FOR FURTHER INFORMATION CONTACT: Kevin G. Baer, Esq., Office of Unfair Import Investigations, U.S. International Trade Commission, telephone (202) 205–2221.

Authority: The authority for institution of this investigation is contained in section 337 of the Tariff Act of 1930, as amended, and in section 210.10 of the Commission's Rules of Practice and Procedure, 19 CFR 210.10 (2010).

Scope of Investigation: Having considered the complaint, the U.S.

International Trade Commission, on November 2, 2010, ordered that—

(1) Pursuant to subsection (b) of section 337 of the Tariff Act of 1930, as amended, an investigation be instituted to determine whether there is a violation of subsection (a)(1)(B) of section 337 in the importation into the United States, the sale for importation, or the sale within the United States after importation of certain wireless communication devices, portable music and data processing devices, computers and components thereof that infringe one or more of claim 12 of the '333 patent; claim 1 of the '862 patent; claims 1–4 of the '697 patent, claims 1 and 17 of the '317 patent, claim 1 of the '223 patent; and claim 1 of the '826 patent, and whether an industry in the United States exists as required by subsection (a)(2) of section 337;

(2) For the purpose of the investigation so instituted, the following are hereby named as parties upon which this notice of investigation shall be served:

(a) The complainant is: Motorola Mobility, Inc., 600 North US Highway 45, Libertyville, Illinois 60048.

(b) The respondent is the following entity alleged to be in violation of section 337, and is the party upon which the complaint is to be served: Apple Inc., 1 Infinite Loop, Cupertino, California 95014.

(c) The Commission investigative attorney, party to this investigation, is Kevin G. Baer, Esq., Office of Unfair Import Investigations, U.S. International Trade Commission, 500 E Street, SW., Suite 401, Washington, DC 20436; and

(3) For the investigation so instituted, the Honorable Paul J. Luckern, Chief Administrative Law Judge, U.S. International Trade Commission, shall designate the presiding Administrative Law Judge.

Responses to the complaint and the notice of investigation must be submitted by the named respondent in accordance with section 210.13 of the Commission's Rules of Practice and Procedure, 19 CFR 210.13. Pursuant to 19 CFR 201.16(d)–(e) and 210.13(a), such responses will be considered by the Commission if received not later than 20 days after the date of service by the Commission of the complaint and the notice of investigation. Extensions of time for submitting responses to the complaint and the notice of investigation will not be granted unless good cause therefor is shown.

Failure of the respondent to file a timely response to each allegation in the complaint and in this notice may be deemed to constitute a waiver of the right to appear and contest the allegations of the complaint and this notice, and to authorize the administrative law judge and the Commission, without further notice to the respondent, to find the facts to be as alleged in the complaint and this notice and to enter an initial determination and a final determination containing such findings, and may result in the issuance of an exclusion order or a cease and desist order or both directed against the respondent.

Issued: November 3, 2010.

By order of the Commission.

Marilyn R. Abbott,

Secretary to the Commission.

[FR Doc. 2010–28150 Filed 11–5–10; 8:45 am]

BILLING CODE 7020–02–P

DEPARTMENT OF JUSTICE

Notice of Lodging of Proposed Consent Decree Under the Clean Water Act

Notice is hereby given that on September 27, 2010, a Consent Decree in *United States of America, et al.* v. *Bristol Township,* Civil Action No. 10–5049, was lodged with the United States District Court for the Eastern District of Pennsylvania. The United States and the Commonwealth of Pennsylvania also filed claims pursuant to the Clean Water Act, 33 U.S.C. 1251 *et seq,* and the Pennsylvania Clean Streams Law, 35 P.S. §§ 691.1 *et seq.* The proposed Consent Decree relates to the operation of the publicly owned treatment works in Bristol Township, and obligates the Township to implement a series of immediate reforms, repairs and upgrades to more accurately assess the function of its collection system. With these tools, the consent decree requires the Township to perform a wide variety of short-, medium, and long-term studies to assess what additional capital improvements will be required. Once these studies are reviewed and approved by EPA and the Pennsylvania Department of Environmental Protection (PADEP), the consent decree requires that the capital improvements be completed in accordance with schedules that it establishes. The consent decree, which resolves the claims brought by the State and Federal plaintiffs, also obligates the Township to pay a civil penalty of $226,000 and establishes a sliding scale of stipulated penalties in case Bristol does not come into compliance with the conditions of its permit.

The Department of Justice will receive for a period of thirty (30) days from the date of this publication comments relating to this proposed Consent Decree. Comments should be addressed to the Assistant Attorney General, Environment and Natural Resources Division, and either e-mailed to *pubcomment-ees.enrd@usdoj.gov* or mailed to P.O. Box 7611, U.S. Department of Justice, Washington, DC 20044–7611, Attention: Nancy Flickinger (EES), and should refer to *Unitd States, et al.* v. *Bristol Township,* Civil Action No. 10–5049, DOJ # 90–5–1–1–09460.

The proposed Consent Decree may be examined at the Office of the United States Attorney for the Eastern District of Pennsylvania, 615 Chestnut Street, Suite 1250, Philadelphia, PA 19016. The consent decree also may be examined on the following Department of Justice Web site, *http://www.usdoj.gov/enrd/Consent_Decrees.html.* A copy of the proposed Consent Decree may also be obtained by mail from the Consent Decree Library, P.O. Box 7611, U.S. Department of Justice, Washington, DC 20044–7611 or by faxing or e-mailing a request to Tonia Fleetwood (*tonia.fleetwood@usdoj.gov*), fax no. (202) 514–0097, phone confirmation number (202) 514–1547. In requesting a copy from the Consent Decree Library, please enclose a check in the amount of $ 16.75 (25 cents per page reproduction cost for a full copy) payable to the U.S. Treasury.

Maureen Katz, Assistant Chief

Environmental Enforcement Section, Environment and Natural Resources Division.

[FR Doc. 2010–28108 Filed 11–5–10; 8:45 am]

BILLING CODE 4410–15–P

DEPARTMENT OF JUSTICE

Notice of Lodging Proposed Consent Decree

In accordance with Departmental Policy, 28 CFR 50.7, notice is hereby given that a proposed Consent Decree in *United States* v. *Century Homebuilders, LLC,* No. 1:09–CV–22258, was lodged with the U.S. District Court for the Southern District of Florida on November 1, 2010.

The proposed Consent Decree concerns a First Amended Complaint filed by the United States of America against Century Homebuilders, LLC, formerly known as Century Builders Group, LLC; Century Partners Group, Ltd.; Century Homebuilders of South Florida, LLC; and Cesar E. Llano to obtain injunctive relief and civil penalties against the defendants for violating Department of the Army Permit Number 200106379 (IP–KBH) and section 301(a) of the Clean Water

Act, 33 U.S.C. 1311(a). The proposed Consent Decree resolves these allegations by requiring the defendants to enhance wetlands, to purchase mitigation credits, and to pay a civil penalty.

The Department of Justice will accept written comments relating to this proposed Consent Decree for thirty (30) days from the date of publication of this Notice. Please address comments to Andrew J. Doyle, Trial Attorney, Environmental Defense Section, P.O. Box 23986, Washington, DC 20026–3986, and refer to *United States* v. *Century Homebuilders, LLC,* DJ # 90–5–1–1–18402.

The proposed Consent Decree may be examined at the Clerk's Office, U.S. District Court, 400 North Miami Avenue, Miami, Florida 33128, or electronically at *http://www.justice.gov/enrd/Consent_Decrees.html.*

Maureen M. Katz,

Assistant Section Chief, Environment & Natural Resources Division.

[FR Doc. 2010–28067 Filed 11–5–10; 8:45 am]

BILLING CODE P

DEPARTMENT OF LABOR

Employment and Training Administration

Notice of Determinations Regarding Eligibility To Apply for Worker Adjustment Assistance

In accordance with Section 223 of the Trade Act of 1974, as amended (19 U.S.C. 2273) the Department of Labor herein presents summaries of determinations regarding eligibility to apply for trade adjustment assistance for workers by (TA–W) number issued during the period of October 18, 2010 through October 22, 2010.

In order for an affirmative determination to be made for workers of a primary firm and a certification issued regarding eligibility to apply for worker adjustment assistance, each of the group eligibility requirements of Section 222(a) of the Act must be met.

I. Under Section 222(a)(2)(A), the following must be satisfied:

(1) A significant number or proportion of the workers in such workers' firm have become totally or partially separated, or are threatened to become totally or partially separated;

(2) The sales or production, or both, of such firm have decreased absolutely; and

(3) One of the following must be satisfied:

(A) Imports of articles or services like or directly competitive with articles produced or services supplied by such firm have increased;

(B) Imports of articles like or directly competitive with articles into which one or more component parts produced by such firm are directly incorporated, have increased;

(C) Imports of articles directly incorporating one or more component parts produced outside the United States that are like or directly competitive with imports of articles incorporating one or more component parts produced by such firm have increased;

(D) Imports of articles like or directly competitive with articles which are produced directly using services supplied by such firm, have increased; and

(4) The increase in imports contributed importantly to such workers' separation or threat of separation and to the decline in the sales or production of such firm; or

II. Section 222(a)(2)(B) all of the following must be satisfied:

(1) A significant number or proportion of the workers in such workers' firm have become totally or partially separated, or are threatened to become totally or partially separated;

(2) One of the following must be satisfied:

(A) There has been a shift by the workers' firm to a foreign country in the production of articles or supply of services like or directly competitive with those produced/supplied by the workers' firm;

(B) There has been an acquisition from a foreign country by the workers' firm of articles/services that are like or directly competitive with those produced/supplied by the workers' firm; and

(3) The shift/acquisition contributed importantly to the workers' separation or threat of separation.

In order for an affirmative determination to be made for adversely affected workers in public agencies and a certification issued regarding eligibility to apply for worker adjustment assistance, each of the group eligibility requirements of Section 222(b) of the Act must be met.

(1) A significant number or proportion of the workers in the public agency have become totally or partially separated, or are threatened to become totally or partially separated;

(2) The public agency has acquired from a foreign country services like or directly competitive with services which are supplied by such agency; and

(3) The acquisition of services contributed importantly to such workers' separation or threat of separation.

In order for an affirmative determination to be made for adversely affected secondary workers of a firm and a certification issued regarding eligibility to apply for worker adjustment assistance, each of the group eligibility requirements of Section 222(c) of the Act must be met.

(1) A significant number or proportion of the workers in the workers' firm have become totally or partially separated, or are threatened to become totally or partially separated;

(2) The workers' firm is a Supplier or Downstream Producer to a firm that employed a group of workers who received a certification of eligibility under Section 222(a) of the Act, and such supply or production is related to the article or service that was the basis for such certification; and

(3) Either—

(A) The workers' firm is a supplier and the component parts it supplied to the firm described in paragraph (2) accounted for at least 20 percent of the production or sales of the workers' firm; or

(B) A loss of business by the workers' firm with the firm described in paragraph (2) contributed importantly to the workers' separation or threat of separation.

In order for an affirmative determination to be made for adversely affected workers in firms identified by the International Trade Commission and a certification issued regarding eligibility to apply for worker adjustment assistance, each of the group eligibility requirements of Section 222(f) of the Act must be met.

(1) The workers' firm is publicly identified by name by the International Trade Commission as a member of a domestic industry in an investigation resulting in—

(A) An affirmative determination of serious injury or threat thereof under section 202(b)(1);

(B) An affirmative determination of market disruption or threat thereof under section 421(b)(1); or

(C) An affirmative final determination of material injury or threat thereof under section 705(b)(1)(A) or 735(b)(1)(A) of the Tariff Act of 1930 (19 U.S.C. 1671d(b)(1)(A) and 1673d(b)(1)(A));

(2) The petition is filed during the 1-year period beginning on the date on which—

(A) A summary of the report submitted to the President by the International Trade Commission under section 202(f)(1) with respect to the affirmative determination described in paragraph (1)(A) is published in the

Federal Register under section 202(f)(3); or

(B) Notice of an affirmative determination described in subparagraph (1) is published in the **Federal Register**; and

(3) The workers have become totally or partially separated from the workers' firm within—

(A) The 1-year period described in paragraph (2); or

(B) Notwithstanding section 223(b)(1), the 1-year period preceding the 1-year period described in paragraph (2).

Affirmative Determinations for Worker Adjustment Assistance

The following certifications have been issued. The date following the company name and location of each determination references the impact date for all workers of such determination.

The following certifications have been issued. The requirements of Section 222(a)(2)(A) (increased imports) of the Trade Act have been met.

TA–W No.	Subject firm	Location	Impact date
73,430	Covad Communications Company, Dieca Communications, Inc. Leased Workers Equity Staffing and Position Filled.	Denver, CO	January 28, 2009.
74,071	Besse Wood Products, Inc., Birds Eye Veneer Company	Butternut, WI	April 20, 2009.
74,510	Ornamental Products, LLC, Tenon, Limited; Leased Workers from Staffmasters.	High Point, NC	July 12, 2010.

The following certifications have been issued. The requirements of Section 222(a)(2)(B) (shift in production or services) of the Trade Act have been met.

TA–W No.	Subject firm	Location	Impact date
73,743	American Fiber and Finishing, Inc., Leased Workers from Staffmasters.	Albemarle, NC	March 17, 2009.
73,940	LVD Acquisition LLC, dba Oasis International	Columbus, OH	March 18, 2009.
74,275	Welch Allyn, Inc., Trimline, Accountemps, Kelly, Delta, and Connection.	Branchburg, NJ	June 16, 2009.
74,275A	Welch Allyn, Inc., Also Known as Trimline	Branchburg, NJ	June 16, 2009.
74,411	Avaya Global Services, AOS Service Delivery, Diamondware, LTD., Virtual Offices.	Research Triangle Park, NC	July 8, 2009.
74,411A	Avaya Global Services, AOS Service Delivery, Diamondware, LTD.	Richardson, TX	July 8, 2009.
74,411B	Avaya Global Services, AOS Service Delivery, Diamondware, LTD.	Billerica, MA	July 8, 2009.
74,411C	Avaya Global Services, AOS Service Delivery, Diamondware, LTD.	Santa Clara, CA	July 8, 2009.
74,546	Medline Industries, Inc., Sterile Procedure Trays Div., Leased Workers from Resource Mfg.	Oldsmar, FL	August 16, 2009.
74,546A	Medline Industries, Inc., Sterile Procedure Trays Div., Leased Workers from Resource Mfg.	Clearwater, FL	August 16, 2009.
74,557	Brinker International, Accounting Division, Accountemps and Right Hire.	Dallas, TX	August 6, 2009.
74,588	Hewlett Packard Company, Applications Services Division	Fishers, IN	August 1, 2009.
74,608	Roman entertainment Corporation of Indiana, D/B/A Harrah's Horseshoe of Southern Indiana, Information Tech. Dept.	Elizabeth, IN	September 8, 2009.
74,662	Hewlett Packard Company, Applications Services Division	Los Angeles, CA	September 15, 2009.
74,677	Hospira, Incorporated, Kelly Service	Pleasant Pairie, WI	August 30, 2009.
74,682	Broadview Network Holdings, Inc.	Rye Brook, NY	September 27, 2009.
74,686	Diebold Software Solutions, A Division of Diebold, Inc., Leased Workers from Technisource, Inc.	Raleigh, NC	September 24, 2009.
74,703	Aviat, U.S., Inc., Harris Stratex, Networks Operating Corp., Greene Resources.	San Jose, CA	November 21, 2010.
74,710	Kasco Corporation	Atlanta, GA	October 4, 2009.
74,727	Habilis, Inc., Optima, Inc.; Monroe Staffing Services, LLC and Photo Temps.	Milford, CT	October 13, 2009.

The following certifications have been issued. The requirements of Section 222(c) (supplier to a firm whose workers are certified eligible to apply for TAA) of the Trade Act have been met.

TA–W No.	Subject firm	Location	Impact date
73,650	Cole Pattern and Engineering	Fort Wayne, IN	March 3, 2009.
74,515	Weyerhaeuser NR—Foster Veneer, ILevel—Engineered Wood Products.	Sweet Home, OR	August 11, 2009.

The following certifications have been issued. The requirements of Section 222(c) (downstream producer for a firm whose workers are certified eligible to apply for TAA) of the Trade Act have been met.

TA–W No.	Subject firm	Location	Impact date
74,352	Trim Masters, Inc., Toyota Boshuko America, Johnson Controls, NESCO Resource.	Nicholasville, KY	July 7, 2009.

Negative Determinations for Worker Adjustment Assistance

In the following cases, the investigation revealed that the eligibility criteria for worker adjustment assistance have not been met for the reasons specified.

The investigation revealed that the criteria under paragraphs(a)(2)(A) (increased imports) and (a)(2)(B) (shift in production or services to a foreign country) of section 222 have not been met.

TA–W No.	Subject firm	Location	Impact date
73,855	Karsten Homes	Stayton, OR.	
74,492	Rocky III Investments, LLC	Montrose, CO.	

I hereby certify that the aforementioned determinations were issued during the period of *October 18, 2010 through October 22, 2010*. Copies of these determinations may be requested under the Freedom of Information Act. Requests may be submitted by fax, courier services, or mail to FOIA Disclosure Officer, Office of Trade Adjustment Assistance (ETA), U.S. Department of Labor, 200 Constitution Avenue, NW., Washington, DC 20210 or *tofoiarequest@dol.gov*. These determinations also are available on the Department's Web site at *http://www.doleta.gov/tradeact* under the searchable listing of determinations.

Dated: October 28, 2010.

Elliott S. Kushner,

Certifying Officer, Division of Trade Adjustment Assistance.

[FR Doc. 2010–28122 Filed 11–5–10; 8:45 am]

BILLING CODE 4510–FN–P

DEPARTMENT OF LABOR

Employment and Training Administration

Investigations Regarding Certifications of Eligibility To Apply for Worker Adjustment Assistance

Petitions have been filed with the Secretary of Labor under Section 221(a) of the Trade Act of 1974 ("the Act") and are identified in the Appendix to this notice. Upon receipt of these petitions, the Director of the Division of Trade Adjustment Assistance, Employment and Training Administration, has instituted investigations pursuant to Section 221(a) of the Act.

The purpose of each of the investigations is to determine whether the workers are eligible to apply for adjustment assistance under Title II, Chapter 2, of the Act. The investigations will further relate, as appropriate, to the determination of the date on which total or partial separations began or threatened to begin and the subdivision of the firm involved.

The petitioners or any other persons showing a substantial interest in the subject matter of the investigations may request a public hearing, provided such request is filed in writing with the Director, Division of Trade Adjustment Assistance, at the address shown below, not later than November 18, 2010.

Interested persons are invited to submit written comments regarding the subject matter of the investigations to the Director, Division of Trade Adjustment Assistance, at the address shown below, not later than November 18, 2010.

Copies of these petitions may be requested under the Freedom of Information Act. Requests may be submitted by fax, courier services, or mail, to FOIA Disclosure Officer, Office of Trade Adjustment Assistance (ETA), U.S. Department of Labor, 200 Constitution Avenue, NW., Washington, DC 20210 or to *foiarequest@dol.gov*.

Signed at Washington, DC this 28th of October 2010.

Elliott S. Kushner,

Certifying Officer, Division of Trade Adjustment Assistance.

APPENDIX

TAA petitions instituted between 10/18/10 and 10/22/10

TA–W	Subject Firm (Petitioners)	Location	Date of institution	Date of petition
74723	Oracle America, Inc. (State/One-Stop)	Broomfield, CO	10/18/10	10/08/10
74724	International Business Machines (IBM) (State/One-Stop)	Endicott, NY	10/18/10	10/06/10
74725	Albany Services, Inc. (State/One-Stop)	Mountain View, CA	10/18/10	10/12/10
74726	Weldco-Beales Manufacturing (State/One-Stop)	Tacoma, WA	10/18/10	10/12/10
74727	Habilis, Inc. (State/One-Stop)	Milford, CT	10/18/10	10/13/10
74728	Dresser, Inc. (Union)	Avon, MA	10/18/10	10/08/10
74729	Kemco (Company)	Travelers Rest, SC	10/18/10	10/13/10
74730	Roseburg Forest Products Dillard Sawmill #1 (Union)	Dillard, OR	10/18/10	09/30/10
74731	Bean Lumber Company (State/One-Stop)	Glenwood, AR	10/18/10	10/12/10
74732	Andy Sims Buick (Workers)	Broadview Heights, OH	10/18/10	10/08/10
74733	Premiere Global Services (Workers)	Deerfield Beach, FL	10/18/10	10/08/10
74734	Chrysler Group, LLC (Union)	Trenton, MI	10/18/10	10/08/10
74735	Texas Hydraulics (Workers)	Athens, TN	10/18/10	10/07/10

APPENDIX—Continued

TAA petitions instituted between 10/18/10 and 10/22/10

TA–W	Subject Firm (Petitioners)	Location	Date of institution	Date of petition
74736	Universal Lighting Technologies, Inc. (Union)	Lincoln Park, NJ	10/18/10	10/14/10
74737	Qantas Airways Limited (Company)	Tucson, AZ	10/18/10	09/22/10
74738	Bombardier Mass Transit Corporation (State/One-Stop)	Bath, NY	10/19/10	10/15/10
74739	Chapman Data Services (Company)	Dallas, TX	10/19/10	10/08/10
74740	Bekaert Corporation (Company)	Vista, CA	10/19/10	10/14/10
74741	Seneca Foods Corporation (Company)	Buhl, ID	10/19/10	09/10/10
74742	Norske Skog USA, Inc. (State/One-Stop)	Southport, CT	10/19/10	10/15/10
74743	Sensata Technologies, Inc. (Workers)	Attleboro, MA	10/19/10	10/15/10
74744	Trane Company (Union)	Fort Smith, AR	10/19/10	10/15/10
74745	CDG Datagraphics Bellevue Campus of CDG (State/One-Stop).	Bellevue, WA	10/19/10	10/15/10
74746	Adrenaline Sporting Goods, LLC (State/One-Stop)	Sherwood, OR	10/19/10	10/04/10
74747	F. J. Folz Company (Workers)	Evansville, IN	10/19/10	10/15/10
74748	Appalachian Katahdin (Workers)	Patten, ME	10/19/10	09/29/10
74749	Alorica (Workers)	Manhattan , KS	10/19/10	10/06/10
74750	HomEq Servicing (Workers)	Raleigh, NC	10/19/10	10/11/10
74751	Eaton Corporation (Union)	Auburn, IN	10/19/10	10/06/10
74752	Morse Automotive Corporation (Company)	Chicago, IL	10/20/10	10/18/10
74753	Hewlett Packard (State/One-Stop)	Roseville, CA	10/20/10	10/06/10
74754	Rag & Bone Industries, LLC (Workers)	New York, NY	10/20/10	10/15/10
74755	Oak Level Finishing & Repair (Company)	Martinsville, VA	10/20/10	09/25/10
74756	Fort McDowell Yavapai Materials (Company)	Fountain Hills, AZ	10/20/10	09/27/10
74757	E.A. Quirin Machine Shop, Inc. (Workers)	St. Clair, PA	10/20/10	10/18/10
74758	IMI Cornelius, Inc. (Company)	Mason City, IA	10/20/10	10/18/10
74759	Del Monte Foods (Company)	Terminal Island, CA	10/20/10	09/27/10
74760	Eagle Industries, LLC (Company)	Bowling Green, KY	10/20/10	10/15/10
74761	Miller Curtain Co., Inc. (Workers)	San Antonio, TX	10/20/10	10/14/10
74762	CR Compressors, LLC (Workers)	Hartselle, AL	10/20/10	10/01/10
74763	Sungard (State/One-Stop)	Malvern, PA	10/22/10	10/15/10
74764	3 Sons Manufacturing (Workers)	Hayden, ID	10/22/10	10/20/10
74765	Patriot Antenna Systems, Inc. (Company)	Albion, MI	10/22/10	10/18/10
74766	Rocon Manufacturing (Workers)	Rochester, NY	10/22/10	10/12/10
74767	Wausau Daily Herald (Workers)	Wausau, WI	10/22/10	10/15/10
74768	Fortune Fashion Industries, LLC (State/One-Stop)	Vernon, CA	10/22/10	10/12/10
74769	Goodrich Lighting Systems (Company)	Oldsmar, FL	10/22/10	10/12/10

[FR Doc. 2010–28121 Filed 11–5–10; 8:45 am]

BILLING CODE 4510–FN–P

NUCLEAR REGULATORY COMMISSION

[Docket No.: 52–043; NRC–2010–0215]

PSEG Power, LLC, and PSEG Nuclear, LLC, Early Site Permit Application for the PSEG Site, Notice of Hearing, Opportunity to Petition for Leave To Intervene, and Associated Order Imposing Procedures for Access to Sensitive Unclassified Non-Safeguards Information and Safeguards Information for Contention Preparation

AGENCY: Nuclear Regulatory Commission (NRC).

ACTION: Notice of hearing and opportunity to petition for leave to intervene.

DATES: Petitions for leave to intervene must be filed by January 7, 2011.

FOR FURTHER INFORMATION CONTACT: Prosanta Chowdhury, Project Manager, EPR Projects Branch, Division of New Reactor Licensing, Office of New Reactors, U.S. Nuclear Regulatory Commission, Washington, DC 20555–0001. Telephone: 301–415–1647; e-mail: *Prosanta.Chowdhury@nrc.gov.*

NRC Public Document Room (PDR): The public may examine and have copied for a fee publicly available documents at the NRC PDR, Room O1 F21, One White Flint North, 11555 Rockville Pike, Rockville, Maryland.

NRC Agencywide Documents Access and Management System (ADAMS): Publicly available documents created or received at the NRC are available electronically at the NRC Electronic Reading Room at *http://www.nrc.gov/reading-rm/adams.html.* From this page, the public can gain entry into ADAMS, which provides text and image files of NRC public documents. If you do not have access to ADAMS or if there are problems in accessing the documents located in ADAMS, contact the NRC PDR reference staff at 1–800–397–4209, 301–415–4737, or by e-mail to *pdr.resource@nrc.gov* . The application letter dated May 25, 2010, is available electronically under ADAMS Accession Number ML101480484. The application is also electronically available for public viewing at *http://www.nrc.gov/reactors/new-reactors/esp/pseg.html.*

SUPPLEMENTARY INFORMATION:

I. Introduction

Pursuant to the Atomic Energy Act of 1954, as amended (the Act), and the regulations in Title 10 of the Code of Federal Regulations (10 CFR) part 2, "Rules of Practice for Domestic Licensing Proceedings and Issuance of Orders," 10 CFR part 50, "Domestic Licensing of Production and Utilization Facilities," and 10 CFR part 52, "Licenses, Certifications, and Approvals for Nuclear Power Plants," notice is hereby given that a hearing will be held, at a time and place to be set in the future by the NRC or designated by the Atomic Safety and Licensing Board (Board). The hearing will consider the application dated May 25, 2010, filed by PSEG Power, LLC and PSEG Nuclear, LLC, pursuant to Subpart A of 10 CFR part 52, for an early site permit (ESP). The

application, which was supplemented by the applicant by letters dated June 22, 2010, July 6, 2010, July 7, 2010, and July 29, 2010, requests approval of an ESP for the PSEG Site to be located in Salem County, New Jersey. Notice of NRC's receipt of the application was published in the **Federal Register** on June 18, 2010 (75 FR 34794). Notice of NRC's docketing of the application was published in the **Federal Register** on August 13, 2010 (75 FR 49539). The docket number established for this application is 52–043.

The PSEG Site ESP application uses technical information from various certified and proposed designs to develop a plant parameter envelope for facility characterization necessary to assess the suitability of the site for any future construction and operation of a nuclear power plant.

The hearing will be conducted by a Board that will be designated by the Chief Judge of the Atomic Safety and Licensing Board Panel or will be conducted by the Commission. Notice as to the membership of the Board would be published in the **Federal Register** at a later date. The NRC staff will complete a detailed technical review of the application and will document its findings in a safety evaluation report (SER). The Commission will refer a copy of the application to the Advisory Committee on Reactor Safeguards (ACRS) in accordance with 10 CFR 52.23, "Referral to the ACRS," and the ACRS will report on those portions of the application that concern safety. The NRC staff will also complete an environmental review of the application and will document its findings in an environmental impact statement (EIS) in accordance with the National Environmental Policy Act of 1969, as amended, and the Commission's regulations in 10 CFR Part 51.

II. Petitions for Leave To Intervene

Requirements for petitions for leave to intervene are found in 10 CFR 2.309, "Hearing requests, Petitions to Intervene, Requirements for Standing, and Contentions." Interested persons should consult 10 CFR part 2, § 2.309, which is available at the NRC PDR, located at O1 F21, One White Flint North, 11555 Rockville Pike, Rockville, Maryland 20852 (or call the PDR at 1–800–397–4209 or 301–415–4737). NRC regulations are also accessible electronically from the NRC Electronic Reading Room on the NRC Web site at *http://www.nrc.gov.*

Any person whose interest may be affected by this proceeding and who desires to participate as a party to this proceeding must file a written petition for leave to intervene. As required by 10 CFR 2.309, a petition for leave to intervene shall set forth with particularity the interest of the petitioner in the proceeding and how that interest may be affected by the results of the proceeding. The petition must provide the name, address, and telephone number of the petitioner and specifically explain the reasons why intervention should be permitted with particular reference to the following factors: (1) The nature of the petitioner's right under the Act to be made a party to the proceeding; (2) the nature and extent of the petitioner's property, financial, or other interest in the proceeding; and (3) the possible effect of any order that may be entered in the proceeding on the petitioner's interest.

A petition for leave to intervene must also include a specification of the contentions that the petitioner seeks to have litigated in the hearing. For each contention, the petitioner must provide a specific statement of the issue of law or fact to be raised or controverted, as well as a brief explanation of the basis for the contention. Additionally, the petitioner must demonstrate that the issue raised by each contention is within the scope of the proceeding and is material to the findings the NRC must make to support the granting of an early site permit in response to the application. The petition must also include a concise statement of the alleged facts or expert opinions which support the position of the petitioner and on which the petitioner intends to rely at hearing, together with references to the specific sources and documents on which the petitioner intends to rely. Finally, the petition must provide sufficient information to show that a genuine dispute exists with the applicant on a material issue of law or fact, including references to specific portions of the application that the petitioner disputes and the supporting reasons for each dispute, or, if the petitioner believes that the application fails to contain information on a relevant matter as required by law, the identification of each failure and the supporting reasons for the petitioner's belief.

Those permitted to intervene become parties to the contested proceeding, subject to any limitations in the order granting leave to intervene. The party's participation will be governed by applicable NRC regulations, policies, and procedures, and may include the opportunity to present the party's legal and technical views, introduce evidence, and propose questions to be asked of witnesses. The Board will set the time and place for any prehearing conferences and evidentiary hearings, and the appropriate notices will be provided.

Petitions for leave to intervene must be filed no later than 60 days from November 8, 2010. Non-timely petitions for leave to intervene and contentions, amended petitions, and supplemental petitions will not be entertained absent a determination by the Commission, the Board or a presiding officer that the petition should be granted and/or the contentions should be admitted based upon a balancing of the factors specified in 10 CFR 2.309(c)(1)(i)–(viii).

A State, county, municipality, Federally-recognized Indian Tribe, or agencies thereof, may submit a petition to the Commission to participate as a party under 10 CFR 2.309(d)(2). The petition should be submitted to the Commission by January 7, 2011. The petition must be filed in accordance with the filing instructions in Section III of this document, and should meet the requirements for petitions for leave to intervene set forth in this section, except that State and Federally-recognized Indian Tribes do not need to address the standing requirements in 10 CFR 2.309(d)(1) if the facility is located within its boundaries. The entities listed above may also seek to participate in a hearing as a nonparty in accordance with 10 CFR 2.315(c).

Any person who does not wish, or is not qualified, to become a party to this proceeding may request permission to make a limited appearance pursuant to the provisions of 10 CFR 2.315(a). A person making a limited appearance may make an oral or written statement of position on the issues, but may not otherwise participate in the proceeding. The Board will determine when it will accept limited appearance statements, and advise the public of such opportunities.

III. Electronic Submissions (E-Filing)

All documents filed in NRC adjudicatory proceedings, including a petition for leave to intervene, any motion or other document filed in the proceeding prior to the submission of a petition to intervene, and documents filed by interested governmental entities participating under 10 CFR 2.315(c), must be filed in accordance with the NRC E-Filing rule (72 FR 49139; August 28, 2007). The E-Filing process requires participants to submit and serve all adjudicatory documents over the internet, or in some cases to mail copies on electronic storage media. Participants may not submit paper copies of their filings unless they seek an exemption in

accordance with the procedures described below.

To comply with the procedural requirements of E-Filing, at least 10 days prior to the filing deadline, the petitioner should contact the Office of the Secretary by e-mail at *Hearing.Docket@nrc.gov,* or by telephone at 301–415–1677, to request (1) a digital ID certificate, which allows the participant (or its counsel or representative) to digitally sign documents and access the E-Submittal server for any proceeding in which it is participating; and (2) advise the Secretary that the participant will be submitting a request or petition for hearing (even in instances in which the participant, or its counsel or representative, already holds an NRC-issued digital ID certificate). Based upon this information, the Secretary will establish an electronic docket for the hearing in this proceeding if the Secretary has not already established an electronic docket.

Information about applying for a digital ID certificate is available on the NRC public Web site at *http://www.nrc.gov/site-help/e-submittals/apply-certificates.html.* System requirements for accessing the E-Submittal server are detailed in the NRC "Guidance for Electronic Submission," which is available on the agency's public Web site at *http://www.nrc.gov/site-help/e-submittals.html.* Participants may attempt to use other software not listed on the Web site, but should note that the NRC E-Filing system does not support unlisted software, and the NRC Meta System Help Desk will not be able to offer assistance in using unlisted software.

If a participant is electronically submitting a document to the NRC in accordance with the E-Filing rule, the participant must file the document using the NRC online, Web-based submission form. In order to serve documents through the Electronic Information Exchange System, users will be required to install a Web browser plug-in from the NRC Web site. Further information on the Web-based submission form, including the installation of the Web browser plug-in, is available on the NRC public Web site at *http://www.nrc.gov/site-help/e-submittals.html.*

Once a participant has obtained a digital ID certificate and a docket has been created, the participant can then submit a petition for leave to intervene. Submissions should be in Portable Document Format (PDF) in accordance with NRC guidance available on the NRC public Web site at *http://www.nrc.gov/site-help/e-submittals.html.* A filing is considered complete at the time the documents are submitted through the NRC E-Filing system. To be timely, an electronic filing must be submitted to the E-Filing system no later than 11:59 p.m. Eastern Time on the due date. Upon receipt of a transmission, the E-Filing system time-stamps the document and sends the submitter an e-mail notice confirming receipt of the document. The E-Filing system also distributes an e-mail notice that provides access to the document to the NRC Office of the General Counsel and any others who have advised the Office of the Secretary that they wish to participate in the proceeding, so that the filer need not serve the documents on those participants separately. Therefore, applicants and other participants (or their counsel or representative) must apply for and receive a digital ID certificate before a petition to intervene is filed so that they can obtain access to the document via the E-Filing system.

A person filing electronically using the NRC adjudicatory E-Filing system may seek assistance by contacting the NRC Meta System Help Desk through the "Contact Us" link located on the NRC Web site at *http://www.nrc.gov/site-help/e-submittals.html,* by email at *MSHD.Resource@nrc.gov,* or by a toll-free call at 866–672–7640. The NRC Meta System Help Desk is available between 8 a.m. and 8 p.m., Eastern Time, Monday through Friday, excluding government holidays.

Participants who believe that they have a good cause for not submitting documents electronically must file an exemption request, in accordance with 10 CFR 2.302(g), with their initial paper filing requesting authorization to continue to submit documents in paper format. Such filings must be submitted by: (1) First class mail addressed to the Office of the Secretary, U.S. Nuclear Regulatory Commission, Washington, DC 20555–0001, Attention: Rulemakings and Adjudications Staff; or (2) courier, express mail, or expedited delivery service to the Office of the Secretary, Sixteenth Floor, One White Flint North, 11555 Rockville Pike, Rockville, Maryland 20852, Attention: Rulemakings and Adjudications Staff. Participants filing a document in this manner are responsible for serving the document on all other participants. Filing is considered complete by first-class mail as of the time of deposit in the mail, or by courier, express mail, or expedited delivery service upon depositing the document with the provider of the service. A presiding officer, having granted an exemption request from using E-Filing, may require a participant or party to use E-Filing if the presiding officer subsequently determines that the reason for granting the exemption from use of E-Filing no longer exists.

Documents submitted in adjudicatory proceedings will appear in the NRC electronic hearing docket, which is available to the public at *http://ehd1.nrc.gov/EHD/,* unless excluded pursuant to an order of the Commission, Board, or the presiding officer. Participants are requested not to include personal privacy information, such as social security numbers, home addresses, or home phone numbers in their filings, unless an NRC regulation or other law requires submission of such information. With respect to copyrighted works, except for limited excerpts that serve the purpose of the adjudicatory filings and would constitute a Fair Use application, participants are requested not to include copyrighted materials in their submission.

As noted in Section II above, petitions for leave to intervene must be filed no later than 60 days from November 8, 2010. Non-timely filings will not be entertained absent a determination by the presiding officer that the petition or request should be granted or the contentions should be admitted, based on a balancing of the factors specified in 10 CFR 2.309(c)(1)(i)–(viii).

Any person who files a motion pursuant to 10 CFR 2.323 must consult with counsel for the applicant and counsel for the NRC staff that are listed below. Counsel for the applicant is Vincent Zabielski, 856–339–1090, *Vincent.Zabielski@pseg.com.* Counsel for the NRC staff in this proceeding is Sarah Price, 301–415–2047, *Sarah.Price@nrc.gov.*

Documents may be examined, and/or copied for a fee, at the NRC PDR, located at One White Flint North, Public File Area O1 F21, 11555 Rockville Pike (first floor), Rockville, Maryland, and will be accessible electronically through the ADAMS Public Electronic Reading Room link at the NRC Web site *http://www.nrc.gov/reading-rm/adams.html.* Persons who do not have access to ADAMS or who encounter problems in accessing documents located in ADAMS should contact the NRC PDR Reference staff by telephone at 1–800–397–4209, 301–415–4737, or by e-mail to *pdr.resource@nrc.gov.* The application is also available at *http://www.nrc.gov/reactors/new-reactors/esp/pseg.html.* The application is also available to local residents at the Penns Grove-Carneys Point Public Library, Penns Grove, New Jersey, and at the Salem Free Public Library, Salem, New Jersey. To search for documents in ADAMS using PSEG site application docket number 52–043,

enter the term "05200043" in the "Docket Number" field when using either the Web-based search (advanced search) engine or the ADAMS "Find" tool in Citrix.

Order Imposing Procedures for Access to Sensitive Unclassified Non-Safeguards Information and Safeguards Information for Contention Preparation

A. This Order contains instructions regarding how potential parties to this proceeding may request access to documents containing sensitive unclassified information (including sensitive unclassified non-safeguards information (SUNSI) and safeguards information (SGI)). Requirements for access to SGI are primarily set forth in 10 CFR parts 2 and 73. Nothing in this Order is intended to conflict with the SGI regulations.

B. Within 10 days after publication of this notice of hearing and opportunity to petition for leave to intervene, any potential party who believes access to SUNSI or SGI is necessary to respond to this notice may request access to SUNSI or SGI. A "potential party" is any person who intends to participate as a party by demonstrating standing and filing an admissible contention under 10 CFR 2.309. Requests for access to SUNSI or SGI submitted later than 10 days after publication will not be considered absent a showing of good cause for the late filing, addressing why the request could not have been filed earlier.

C. The requestor shall submit a letter requesting permission to access SUNSI, SGI, or both to the Office of the Secretary, U.S. Nuclear Regulatory Commission, Washington, DC 20555–0001, Attention: Rulemakings and Adjudications Staff, and provide a copy to the Associate General Counsel for Hearings, Enforcement and Administration, Office of the General Counsel, Washington, DC 20555–0001. The expedited delivery or courier mail address for both offices is: U.S. Nuclear Regulatory Commission, 11555 Rockville Pike, Rockville, Maryland 20852. The e-mail address for the Office of the Secretary and the Office of the General Counsel are *Hearing.Docket@nrc.gov* and *OGCmailcenter@nrc.gov,* respectively.[1] The request must include the following information:

(1) A description of the licensing action with a citation to this **Federal Register** notice;

(2) The name and address of the potential party and a description of the potential party's particularized interest that could be harmed by the action identified in C.(1) of this Order;

(3) If the request is for SUNSI, the identity of the individual or entity requesting access to SUNSI and the requestor's basis for the need for the information in order to meaningfully participate in this adjudicatory proceeding. In particular, the request must explain why publicly available versions of the information requested would not be sufficient to provide the basis and specificity for a proffered contention;

(4) If the request is for SGI, the identity of each individual who would have access to SGI if the request is granted, including the identity of any expert, consultant, or assistant who will aid the requestor in evaluating the SGI. In addition, the request must contain the following information:

(a) A statement that explains each individual's "need to know" the SGI, as required by 10 CFR 73.2 and 10 CFR 73.22(b)(1). Consistent with the definition of "need to know" as stated in 10 CFR 73.2, the statement must explain:

(i) Specifically why the requestor believes that the information is necessary to enable the requestor to proffer and/or adjudicate a specific contention in this proceeding;[2] and

(ii) The technical competence (demonstrable knowledge, skill, training or education) of the requestor to effectively utilize the requested SGI to provide the basis and specificity for a proffered contention. The technical competence of a potential party or its counsel may be shown by reliance on a qualified expert, consultant, or assistant who satisfies these criteria.

(b) A completed Form SF–85, "Questionnaire for Non-Sensitive Positions," for each individual who would have access to SGI. The completed Form SF–85 will be used by the Office of Administration to conduct the background check required for access to SGI, as required by 10 CFR part 2, subpart G and 10 CFR 73.22(b)(2), to determine the requestor's trustworthiness and reliability. For security reasons, Form SF–85 can only be submitted electronically through the electronic questionnaire for investigations processing (e-QIP) Web site, a secure Web site that is owned and operated by the Office of Personnel Management. To obtain online access to the form, the requestor should contact the NRC Office of Administration at 301–492–3524.[3]

(c) A completed Form FD–258 (fingerprint card), signed in original ink, and submitted in accordance with 10 CFR 73.57(d). Copies of Form FD–258 may be obtained by writing the Office of Information Services, U.S. Nuclear Regulatory Commission, Washington, DC 20555–0001, by calling 301–415–7232 or 301–492–7311, or by e-mail to *Forms.Resource@nrc.gov.* The fingerprint card will be used to satisfy the requirements of 10 CFR Part 2, 10 CFR 73.22(b)(1), and Section 149 of the Act which mandates that all persons with access to SGI must be fingerprinted for an FBI identification and criminal history records check;

(d) A check or money order payable in the amount of $200[4] to the U.S. Nuclear Regulatory Commission for each individual for whom the request for access has been submitted, and

(e) If the requestor or any individual who will have access to SGI believes they belong to one or more of the categories of individuals that are exempt from the criminal history records check and background check requirements in 10 CFR 73.59, the requestor should also provide a statement identifying which exemption the requestor is invoking and explaining the requestor's basis for believing that the exemption applies. While processing the request, the Office of Administration, Personnel Security Branch, will make a final determination whether the claimed exemption applies. Alternatively, the requestor may contact the Office of Administration for an evaluation of their exemption status prior to submitting their request. Persons who are exempt from the background check are not required to complete the SF–85 or Form FD–258; however, all other requirements for access to SGI, including the "need to know," are still applicable.

Note: Copies of documents and materials required by paragraphs C.(4)(b), (c), and (d) of this Order must be sent to the following address: Office of Administration, U.S. Nuclear Regulatory Commission, Personnel

[1] While a request for hearing or petition to intervene in this proceeding must comply with the filing requirements of the NRC "E Filing Rule," the initial request to access SUNSI and/or SGI under these procedures should be submitted as described in this paragraph.

[2] Broad SGI requests under these procedures are unlikely to meet the standard for need to know; furthermore, staff redaction of information from requested documents before their release may be appropriate to comport with this requirement. These procedures do not authorize unrestricted disclosure or less scrutiny of a requestor's need to know than ordinarily would be applied in connection with an already-admitted contention or non-adjudicatory access to SGI.

[3] The requestor will be asked to provide his or her full name, social security number, date and place of birth, telephone number, and e-mail address. After providing this information, the requestor usually should be able to obtain access to the online form within one business day.

[4] This fee is subject to change pursuant to the Office of Personnel Management's adjustable billing rates.

Security Branch, Mail Stop TWB–05–B32M, Washington, DC 20555–0001.

These documents and materials should not be included with the request letter to the Office of the Secretary, but the request letter should state that the forms and fees have been submitted as required above.

D. To avoid delays in processing requests for access to SGI, the requestor should review all submitted materials for completeness and accuracy (including legibility) before submitting them to the NRC. The NRC will return incomplete packages to the sender without processing.

E. Based on an evaluation of the information submitted under paragraphs C.(3) or C.(4) above, as applicable, the NRC staff will determine within 10 days of receipt of the request whether:

(1) There is a reasonable basis to believe the petitioner is likely to establish standing to participate in this NRC proceeding; and

(2) The requestor has established a legitimate need for access to SUNSI or need to know the SGI requested.

F. For requests for access to SUNSI, if the NRC staff determines that the requestor satisfies both E.(1) and E.(2) above, the NRC staff will notify the requestor in writing that access to SUNSI has been granted. The written notification will contain instructions on how the requestor may obtain copies of the requested documents, and any other conditions that may apply to access to those documents. These conditions may include, but are not limited to, the signing of a Non-Disclosure Agreement or Affidavit, or Protective Order [5] setting forth terms and conditions to prevent the unauthorized or inadvertent disclosure of SUNSI by each individual who will be granted access to SUNSI.

G. For requests for access to SGI, if the NRC staff determines that the requestor has satisfied both E.(1) and E.(2) above, the Office of Administration will then determine, based upon completion of the background check, whether the proposed recipient is trustworthy and reliable, as required for access to SGI by 10 CFR 73.22(b). If the Office of Administration determines that the individual or individuals are trustworthy and reliable, the NRC will promptly notify the requestor in writing. The notification will provide the names of approved individuals as well as the conditions under which the SGI will be provided. Those conditions may include, but not be limited to, the signing of a Non-Disclosure Agreement or Affidavit, or Protective Order [6] by each individual who will be granted access to SGI.

H. Release and Storage of SGI. Prior to providing SGI to the requestor, the NRC staff will conduct (as necessary) an inspection to confirm that the recipient's information protection system is sufficient to satisfy the requirements of 10 CFR 73.22. Alternatively, recipients may opt to view SGI at an approved SGI storage location rather than establish their own SGI protection program to meet SGI protection requirements.

I. Filing of Contentions. Any contentions in these proceedings that are based upon the information received as a result of the request made for SUNSI or SGI must be filed by the requestor no later than 25 days after the requestor is granted access to that information. However, if more than 25 days remain between the date the petitioner is granted access to the information and the deadline for filing all other contentions (as established in the notice of hearing or opportunity for hearing), the petitioner may file its SUNSI or SGI contentions by that later deadline.

J. Review of Denials of Access.

(1) If the request for access to SUNSI or SGI is denied by the NRC staff either after a determination on standing and requisite need, or after a determination on trustworthiness and reliability, the NRC staff shall immediately notify the requestor in writing, briefly stating the reason or reasons for the denial.

(2) Before the Office of Administration makes an adverse determination regarding the proposed recipient(s) trustworthiness and reliability for access to SGI, the Office of Administration, in accordance with 10 CFR 2.705(c)(3)(iii), must provide the proposed recipient(s) any records that were considered in the trustworthiness and reliability determination, including those required to be provided under 10 CFR 73.57(e)(1), so that the proposed recipient(s) have an opportunity to correct or explain the record.

(3) The requestor may challenge the NRC staff's adverse determination with respect to access to SUNSI by filing a challenge within 5 days of receipt of that determination with: (a) The presiding officer designated in this proceeding; (b) if no presiding officer has been appointed, the Chief Administrative Judge, or if he or she is unavailable, another administrative judge, or an administrative law judge with jurisdiction pursuant to 10 CFR 2.318(a); or (c) if another officer has been designated to rule on information access issues, with that officer.

(4) The requestor may challenge the NRC staff's or Office of Administration's adverse determination with respect to access to SGI by filing a request for review in accordance with 10 CFR 2.705(c)(3)(iv). Further appeals of decisions under this paragraph must be made pursuant to 10 CFR 2.311.

K. Review of Grants of Access. A party other than the requestor may challenge an NRC staff determination granting access to SUNSI or SGI whose release would harm that party's interest independent of the proceeding. Such a challenge must be filed with the Chief Administrative Judge within 5 days of the notification by the NRC staff of its grant of access.

If challenges to the NRC staff determinations are filed, these procedures give way to the normal process for litigating disputes concerning access to information. The availability of interlocutory review by the Commission of orders ruling on such NRC staff determinations (whether granting or denying access) is governed by 10 CFR 2.311.[7]

L. The Commission expects that the NRC staff and presiding officers (and any other reviewing officers) will consider and resolve requests for access to SUNSI or SGI, and motions for protective orders, in a timely fashion in order to minimize any unnecessary delays in identifying those petitioners who have standing and who have propounded contentions meeting the specificity and basis requirements in 10 CFR part 2. Attachment 1 to this Order summarizes the general target schedule for processing and resolving requests under these procedures.

It is so ordered.

Dated at Rockville, Maryland, this 1st day of November 2010.

For the Commission.

Annette L. Vietti-Cook.

Secretary of the Commission.

Attachment 1—General Target Schedule for Processing and Resolving Requests for Access to Sensitive Unclassified Non-Safeguards Information and Safeguards Information in This Proceeding

[5] Any motion for Protective Order or draft Non-Disclosure Affidavit or Agreement for SUNSI must be filed with the presiding officer or the Chief Administrative Judge if the presiding officer has not yet been designated, within 30 days of the deadline for the receipt of the written access request.

[6] Any motion for Protective Order or draft Non-Disclosure Affidavit or Agreement for SGI must be filed with the presiding officer or the Chief Administrative Judge if the presiding officer has not yet been designated, within 180 days of the deadline for the receipt of the written access request.

[7] Requestors should note that the filing requirements of the NRC E-Filing Rule (72 FR 49139; August 28, 2007) apply to appeals of NRC staff determinations (because they must be served on a presiding officer or the Commission, as applicable), but not to the initial SUNSI/SGI request submitted to the NRC staff under these procedures.

Day	Event/Activity
0	Publication of **Federal Register** notice of hearing and opportunity to petition for leave to intervene, including order with instructions for access requests.
10	Deadline for submitting requests for access to sensitive unclassified non-safeguards information (SUNSI) and/or safeguards information (SGI) with information: Supporting the standing of a potential party identified by name and address; describing the need for the information in order for the potential party to participate meaningfully in an adjudicatory proceeding; demonstrating that access should be granted (e.g., showing technical competence for access to SGI); and, for SGI, including application fee for the fingerprint/background check.
60	Deadline for submitting petition for intervention containing: (i) Demonstration of standing; (ii) all contentions whose formulation does not require access to SUNSI and/or SGI (+25 Answers to petition for intervention; +7 requestor/petitioner reply).
20	Nuclear Regulatory Commission (NRC) staff informs the requestor of the staff's determination whether the request for access provides a reasonable basis to believe standing can be established and shows (1) need for SUNSI or (2) "need to know" for SGI. (For SUNSI, NRC staff also informs any party to the proceeding whose interest independent of the proceeding would be harmed by the release of the information.) If NRC staff makes the finding of need for SUNSI and likelihood of standing, NRC staff begins document processing (preparation of redactions or review of redacted documents). If NRC staff makes the finding of "need to know" for SGI and likelihood of standing, NRC staff begins background check (including fingerprinting for a criminal history records check), information processing (preparation of redactions or review of redacted documents), and readiness inspections.
25	If NRC staff finds no "need to know," or no likelihood of standing, the deadline for requestor/petitioner to file a motion seeking a ruling to reverse the NRC staff's denial of access; NRC staff files copy of access determination with the presiding officer (or Chief Administrative Judge or other designated officer, as appropriate). If NRC staff finds need for SUNSI, the deadline for any party to the proceeding whose interest independent of the proceeding would be harmed by the release of the information to file a motion seeking a ruling to reverse the NRC staff's grant of access.
30	Deadline for NRC staff reply to motions to reverse NRC staff determination(s).
40	(Receipt +30) If NRC staff finds standing and need for SUNSI, deadline for NRC staff to complete information processing and file motion for Protective Order and draft Non-Disclosure Affidavit. Deadline for applicant/licensee to file Non-Disclosure Agreement for SUNSI.
190	(Receipt +180) If NRC staff finds standing, "need to know" for SGI, and trustworthiness and reliability, deadline for NRC staff to file motion for Protective Order and draft Non-disclosure Affidavit (or to make a determination that the proposed recipient of SGI is not trustworthy or reliable). Note: Before the Office of Administration makes an adverse determination regarding access to SGI, the proposed recipient must be provided an opportunity to correct or explain information.
205	Deadline for petitioner to seek reversal of a final adverse NRC staff trustworthiness or reliability determination either before the presiding officer or another designated officer under 10 CFR 2.705(c)(3)(iv).
A	If access granted: Issuance of presiding officer or other designated officer decision on motion for protective order for access to sensitive information (including schedule for providing access and submission of contentions) or decision reversing a final adverse determination by the NRC staff.
A + 3	Deadline for filing executed Non-Disclosure Affidavits. Access provided to SUNSI and/or SGI consistent with decision issuing the protective order.
A + 28	Deadline for submission of contentions whose development depends upon access to SUNSI and/or SGI. However, if more than 25 days remain between the petitioner's receipt of (or access to) the information and the deadline for filing all other contentions (as established in the notice of hearing or opportunity for hearing), the petitioner may file its SUNSI or SGI contentions by that later deadline.
A + 53	(Contention receipt +25) Answers to contentions whose development depends upon access to SUNSI and/or SGI.
A + 60	(Answer receipt +7) Petitioner/Intervener reply to answers.
A + 60	Decision on contention admission.

[FR Doc. 2010–28131 Filed 11–5–10; 8:45 am]
BILLING CODE 7590–01–P

NUCLEAR REGULATORY COMMISSION

[Docket No. 50–020; NRC–2010–0313]

Massachusetts Institute of Technology Reactor Notice of Issuance of Renewed Facility Operating; License No. R–37

The U.S. Nuclear Regulatory Commission (NRC) has issued renewed Facility Operating License No. R–37, held by the Massachusetts Institute of Technology (the licensee), which authorizes continued operation of the Massachusetts Institute of Technology Reactor (MITR–II), located in Cambridge, Middlesex County, Massachusetts. The MITR–II is a tank-type, light-water-cooled-and-moderated, heavy-water-reflected research reactor licensed to operate at a steady-state power level of 6 megawatts thermal power. Renewed Facility Operating License No. R–37 will expire at midnight 20 years from its date of issuance.

The renewed license complies with the standards and requirements of the Atomic Energy Act of 1954, as amended (the Act), and the Commission's rules and regulations. The Commission has made appropriate findings as required by the Act and the Commission's regulations in Title 10, Chapter 1, "Nuclear Regulatory Commission," of the *Code of Federal Regulations* (10 CFR), and sets forth those findings in the renewed license. The Agency afforded an opportunity for hearing in the Notice of Opportunity for Hearing published in the **Federal Register** on May 8, 2008, at 73 FR 26148. The NRC received no request for a hearing or petition for leave to intervene following the notice.

The NRC staff prepared a safety evaluation report for the renewal of Facility Operating License No. R–37 and concluded, based on that evaluation, that the licensee can continue to operate the facility without endangering the health and safety of the public. The NRC staff also prepared an Environmental Assessment and Finding of No Significant Impact for license renewal, noticed in the **Federal Register** on October 5, 2010, at 75 FR 61220, and concluded that renewal of the license will not have a significant impact on the quality of the human environment.

For details with respect to the application for renewal, see the licensee's letter dated July 8, 1999 (ML080950435), as supplemented by letters dated February 10 (ADAMS Accession Nos. ML003683419, ML052900533, ML053190234, and ML053190384), and May 8, 2000 (ADAMS Accession No. ML081000625), January 29, 2004 (ADAMS Accession No. ML081000626), July 5 (ADAMS Accession No. ML061930319), and October 11, 2006 (ADAMS Accession No. ML063340716), January 26, 2007 (ADAMS Accession No. ML070320555), February 22 (ADAMS Accession No. ML081000627), May 29 (ADAMS Accession No. ML081560246), August 15 (ADAMS Accession No. ML082350069), 21 (ADAMS Accession No. ML082401050), and 26 (ADAMS Accession No. ML082470562), October 6 (ADAMS Accession No. ML082900488) and 7 (ADAMS Accession No. ML082910241), and December 1, 2008 (ADAMS Accession No. ML083430006), May 26 (ADAMS Accession No. ML091540202), August 27 (ADAMS Accession No. ML092450427), October 5 (ADAMS Accession No. ML092930273), October 9 (ADAMS Accession No. ML092930278), and November 19, 2009 (ADAMS Accession No. ML093290155), and March 30 (ADAMS Accession No. ML100970368), August 6 (ADAMS Accession No. ML102310032), and August 26, 2010 (ADAMS Accession No. ML102440122). Documents may be examined, and/or copied for a fee, at the NRC's Public Document Room (PDR), located at One White Flint North, 11555 Rockville Pike (first floor), Rockville, Maryland. Publicly available records will be accessible electronically from the Agencywide Documents Access and Management System (ADAMS) Public Electronic Reading Room on the NRC Web site, *http://www.nrc.gov/reading-rm/adams.html.* Persons who do not have access to ADAMS or who encounter problems in accessing the documents located in ADAMS should contact the NRC PDR Reference staff at 1–800–397–4209 or 301–415–4737, or send an e-mail to *pdr@nrc.gov.*

Dated at Rockville, Maryland, this 1st day of November, 2010.

For the Nuclear Regulatory Commission.

Jessie Quichocho,

Chief, Research and Test Reactors Licensing Branch, Division of Policy and Rulemaking, Office of Nuclear Reactor Regulation.

[FR Doc. 2010–28130 Filed 11–5–10; 8:45 am]

BILLING CODE 7590–01–P

NUCLEAR REGULATORY COMMISSION

[NRC–2010–0002]

Sunshine Federal Register Notice

AGENCY HOLDING THE MEETINGS: Nuclear Regulatory Commission.

DATE: Week of November 1, 2010.

PLACE: Commissioners' Conference Room, 11555 Rockville Pike, Rockville, Maryland.

STATUS: Public and Closed.

Additional Items to be Considered:

Week of November 1, 2010

Friday, November 5, 2010

9:25 a.m.

Affirmation Session (Public Meeting) (Tentative).

a. *Entergy Nuclear Generation Co. and Entergy Nuclear Operations, Inc.* (Pilgrim Nuclear Power Station) Pilgrim Watch Motion Seeking Commission to Order Board to Respond or to Respond Itself to Pilgrim Watch Questions (Tentative).

This meeting will be Webcast live at the Web address—*http://www.nrc.gov.*

* * * * *

* The schedule for Commission meetings is subject to change on short notice. To verify the status of meetings, call (recording)—(301) 415–1292. Contact person for more information: Rochelle Bavol, (301) 415–1651.

* * * * *

Additional Information

By a vote of 3–1 on November 2, 2010, the Commission determined pursuant to U.S.C. 552b(e) and '9.107(a) of the Commission's rules that the above referenced Affirmation be held on November 5, 2010, with less than one week notice to the public.

* * * * *

The NRC Commission Meeting Schedule can be found on the Internet at: *http://www.nrc.gov/about-nrc/policy-making/schedule.html.*

* * * * *

The NRC provides reasonable accommodation to individuals with disabilities where appropriate. If you need a reasonable accommodation to participate in these public meetings, or need this meeting notice or the transcript or other information from the public meetings in another format (*e.g.* braille, large print), please notify Angela Bolduc, Chief, Employee/Labor Relations and Work Life Branch, at 301–492–2230, TDD: 301–415–2100, or by e-mail at angela.bolduc@nrc.gov. Determinations on requests for reasonable accommodation will be made on a case-by-case basis.

* * * * *

This notice is distributed electronically to subscribers. If you no longer wish to receive it, or would like to be added to the distribution, please contact the Office of the Secretary, Washington, DC 20555 (301–415–1969), or send an e-mail to *darlene.wright@nrc.gov.*

Dated: November 3, 2010.

Richard J. Laufer,

Technical Coordinator, Office of the Secretary.

[FR Doc. 2010–28252 Filed 11–4–10; 4:15 pm]

BILLING CODE 7590–01–P

PEACE CORPS

Information Collection Requests Under OMB Review

November 3, 2010.

AGENCY: Peace Corps.

ACTION: 60-Day notice and request for comments.

SUMMARY: In accordance with the Paperwork Reduction Act, this notice invites the public to comment on the proposed collection of information by the Peace Corps' Office of Communications. The Peace Corps' Office of Communications wishes to collect feedback from Peace Corps applicants and Returned Volunteers to help understand which factors are driving recruitment attrition, as well as what information or education needs would increase the conversion ratio. Former applicants and Returned Volunteers will be contacted by e-mail and will be asked to complete a quantitative online survey to better understand candidate motivation to serve as a volunteer, their perceptions of Peace Corps and their experience with Peace Corps' recruitment and selection process.

DATES: Submit comments on or before January 7, 2011.

ADDRESSES: Comments should be addressed to Denora Miller, FOIA Officer, 1111 20th Street, NW., DC 20526. Denora Miller can be contacted by telephone at 202–692–1236 or e-mail at *pcfr@peacecorps.gov.* E-mail comments must be made in text and not in attachments.

FOR FURTHER INFORMATION CONTACT: Denora Miller at Peace Corps address above.

SUPPLEMENTARY INFORMATION: The purpose of this survey is to collect feedback from Peace Corps applicants

and Returned Volunteers to help understand which factors are driving recruitment attrition, as well as what information or education needs would increase the conversion ratio. An online survey will be conducted among 1,200 Peace Corps applicants and Returned Peace Corps Volunteers including 300 from each of the following segments: Inquire—complete an initial inquiry but do not begin or submit an application; Begin application—but either do not submit it or move forward; Submit complete application—but then elect not to proceed by stopping communication or actively withdrawing during the review process; Returned Peace Corps Volunteers—who recently closed Peace Corps service in the past two years. Including Returned Peace Corps Volunteers in the study will provide information to understand what is working in the application process and will help guide the strategies for correcting the conversion loss. There is no statutory or regulatory requirement for this information.

Method: The information will be collected through an online survey.

Title: Peace Corps Conversion Loss Survey.

OMB Control Number: [To be assigned.]

Type of Review: New.

Affected Public: Former applicants to the Peace Corps and Returned Peace Corps Volunteers.

Respondents' obligation to reply: Voluntary.

Estimate of the total number of respondents and the amount of time for an average respondent to respond: 1,200.

Estimated time to complete survey: 20 minutes average on-line written response time.

Estimate of the total public burden (in hours) associated with this collection: 400 hours.

Frequency of Response: 1 time.

Estimated number of respondents: 1,200.

General description of collection: To understand which factors are driving recruitment attrition, as well as what information or education needs would increase the conversion ratio.

Request for Comment: Peace Corps invites comments on whether the proposed collection of information is necessary for proper performance of the functions of the Peace Corps, including whether the information will have practical use; the accuracy of the agency's estimate of the burden of the proposed collection of information, including the validity of the information to be collected; and, ways to minimize the burden of the collection of information on those who respond, including through the use of automated collection techniques, when appropriate, and other forms of information technology.

This notice issued in Washington, DC on November 3, 2010.

Garry W. Stanberry,

Deputy Associate Director for Management.

[FR Doc. 2010–28128 Filed 11–5–10; 8:45 am]

BILLING CODE 6051–01–P

RAILROAD RETIREMENT BOARD

Sunshine Act; Notice of Public Hearing

Notice is hereby given that the Railroad Retirement Board, acting through its appointed Hearing Examiner, will hold a hearing on December 6, 2010, at 9 a.m., in Room 6A in the Bryan Simpson United States Courthouse at 300 North Hogan Street, Jacksonville, Florida 32202. The hearing will held at the order of the Board for the purpose of taking evidence on the question of whether certain individuals who performed service for CSX Real Property, Inc. prior to January 1, 2007, are covered employees under the Railroad Retirement and the Railroad Unemployment Insurance Acts.

The entire hearing will be open to the public. The person to contact for more information is Karl Blank, Hearing Examiner, phone number (312) 751–4941, TDD (312) 751–4701.

Dated: November 3, 2010.

For the Board.

Beatrice Ezerski,

Secretary to the Board.

[FR Doc. 2010–28215 Filed 11–4–10; 11:15 am]

BILLING CODE 7905–01–P

SECURITIES AND EXCHANGE COMMISSION

Submission for OMB Review; Comment Request

Upon Written Request, Copies Available From: Securities and Exchange Commission, Office of Investor Education and Advocacy, Washington, DC 20549–0213.

Extension:

Rule 237; SEC File No. 270–465; OMB Control No. 3235–0528.

Notice is hereby given that, pursuant to the Paperwork Reduction Act of 1995 (44 U.S.C. 350l–3520), the Securities and Exchange Commission (the "Commission") has submitted to the Office of Management and Budget a request for extension and approval of the collection of information discussed below.

In Canada, as in the United States, individuals can invest a portion of their earnings in tax-deferred retirement savings accounts ("Canadian retirement accounts"). These accounts, which operate in a manner similar to individual retirement accounts in the United States, encourage retirement savings by permitting savings on a tax-deferred basis. Individuals who establish Canadian retirement accounts while living and working in Canada and who later move to the United States ("Canadian-U.S. Participants" or "participants") often continue to hold their retirement assets in their Canadian retirement accounts rather than prematurely withdrawing (or "cashing out") those assets, which would result in immediate taxation in Canada.

Once in the United States, however, these participants historically have been unable to manage their Canadian retirement account investments. Most securities that are "qualified investments" for Canadian retirement accounts are not registered under the U.S. securities laws. Those securities, therefore, generally cannot be publicly offered and sold in the United States without violating the registration requirement of the Securities Act of 1933 ("Securities Act").[1]

As a result of this registration requirement, Canadian-U.S. Participants previously were not able to purchase or exchange securities for their Canadian retirement accounts as needed to meet their changing investment goals or income needs.

The Commission issued a rulemaking in 2000 that enabled Canadian-U.S. Participants to manage the assets in their Canadian retirement accounts by providing relief from the U.S. registration requirements for offers of securities of foreign issuers to Canadian-U.S. Participants and sales to Canadian retirement accounts.[2] Rule 237 under the Securities Act[3] permits securities of foreign issuers, including securities of foreign funds, to be offered to Canadian-

[1] 15 U.S.C. 77. In addition, the offering and selling of securities of investment companies ("funds") that are not registered pursuant to the Investment Company Act of 1940 ("Investment Company Act") is generally prohibited by U.S. securities laws. 15 U.S.C. 80a.

[2] *See* Offer and Sale of Securities to Canadian Tax-Deferred Retirement Savings Accounts, Release Nos. 33–7860, 34–42905, IC–24491 (June 7, 2000) [65 FR 37672 (June 15, 2000)]. This rulemaking also included new Rule 7d-2 under the Investment Company Act, permitting foreign funds to offer securities to Canadian-U.S. Participants and sell securities to Canadian retirement accounts without registering as investment companies under the Investment Company Act. 17 CFR 270.7d-2.

[3] 17 CFR 230.237.

U.S. Participants and sold to their Canadian retirement accounts without being registered under the Securities Act.

Rule 237 requires written offering documents for securities offered and sold in reliance on the rule to disclose prominently that the securities are not registered with the Commission and are exempt from registration under the U.S. securities laws. The burden under the rule associated with adding this disclosure to written offering documents is minimal and is non-recurring. The foreign issuer, underwriter, or broker-dealer can redraft an existing prospectus or other written offering material to add this disclosure statement, or may draft a sticker or supplement containing this disclosure to be added to existing offering materials. In either case, based on discussions with representatives of the Canadian fund industry, the staff estimates that it would take an average of 10 minutes per document to draft the requisite disclosure statement.

The Commission understands that there are approximately 3,811 Canadian issuers other than funds that may rely on Rule 237 to make an initial public offering of their securities to Canadian-U.S. Participants.[4] The staff estimates that in any given year approximately 38 (or 1 percent) of those issuers are likely to rely on Rule 237 to make a public offering of their securities to participants, and that each of those 38 issuers, on average, distributes 3 different written offering documents concerning those securities, for a total of 114 offering documents.

The staff therefore estimates that during each year that Rule 237 is in effect, approximately 38 respondents[5] would be required to make 114 responses by adding the new disclosure statements to approximately 114 written offering documents. Thus, the staff estimates that the total annual burden associated with the rule 237 disclosure requirement would be approximately 19 hours (114 offering documents x 10 minutes per document). The total annual cost of burden hours is estimated to be $6,004 (19 hours × $316 per hour of attorney time).[6]

In addition, issuers from foreign countries other than Canada could rely on Rule 237 to offer securities to Canadian-U.S. Participants and sell securities to their accounts without becoming subject to the registration requirements of the Securities Act. However, the staff believes that the number of issuers from other countries that rely on Rule 237, and that therefore are required to comply with the offering document disclosure requirements, is negligible.

These burden hour estimates are based upon the Commission staff's experience and discussions with the fund industry. The estimates of average burden hours are made solely for the purposes of the Paperwork Reduction Act. These estimates are not derived from a comprehensive or even a representative survey or study of the costs of Commission rules.

Compliance with the collection of information requirements of the rule is mandatory and is necessary to comply with the requirements of the rule in general. Responses will not be kept confidential. An agency may not conduct or sponsor, and a person is not required to respond to, a collection of information unless it displays a currently valid control number. Background documentation for this information collection may be viewed at the following link, *http://www.reginfo.gov*. Please direct general comments to the following persons: (i) Desk Officer for the Securities and Exchange Commission, Office of Management and Budget, Room 10102, New Executive Office Building, Washington, DC 20503 or send an e-mail to Shagufta Ahmed at *Shagufta_Ahmed@omb.eop.gov;* Thomas Bayer, Director/CIO, Securities and Exchange Commission, C/O Remi Pavlik-Simon, 6432 General Green Way, Alexandria, VA 22312; or send an e-mail to: *PRA_Mailbox@sec.gov.* Comments must be submitted to OMB within 30 days of this notice.

November 1, 2010.

Florence E. Harmon,

Deputy Secretary.

[FR Doc. 2010–28180 Filed 11–5–10; 8:45 am]

BILLING CODE 8011–01–P

[4] This estimate is based on the following calculation: 3,700 equity issuers + 111 bond issuers = 3,811 total issuers. *See* World Federation of Exchanges, Number of Listed Issuers, *available at* http://www.world-exchanges.org/statistics/annual/2009 (providing numbers of equity and fixed-income issuers on Canada's Toronto Stock Exchange in 2009).

[5] This estimate of respondents only includes foreign issuers. The number of respondents would be greater if foreign underwriters or broker-dealers draft stickers or supplements to add the required disclosure to existing offering documents.

[6] The Commission's estimate concerning the wage rate for attorney time is based on salary information for the securities industry compiled by the Securities Industry and Financial Markets Association ("SIFMA"). The $316 per hour figure for an attorney is from SIFMA's *Management & Professional Earnings in the Securities Industry 2009,* modified by Commission staff to account for an 1,800-hour work-year and multiplied by 5.35 to account for bonuses, firm size, employee benefits, and overhead.

SECURITIES AND EXCHANGE COMMISSION

[Release No. 34–63230; File No. 4–618]

Program for Allocation of Regulatory Responsibilities Pursuant to Rule 17d–2; Notice of Filing of Proposed Plan for the Allocation of Regulatory Responsibilities Between BATS Exchange, Inc., BATS Y-Exchange, Inc., Chicago Board Options Exchange, Inc., Chicago Stock Exchange, Inc., EDGA Exchange, Inc., EDGX Exchange, Inc., Financial Industry Regulatory Authority, Inc., The NASDAQ Stock Market LLC, NASDAQ OMX BX, Inc., NASDAQ OMX PHLX LLC, National Stock Exchange, Inc., New York Stock Exchange LLC, NYSE Amex LLC, and NYSE Arca, Inc. Relating to Regulation NMS Rules

November 2, 2010.

Pursuant to Section 17(d) of the Securities Exchange Act of 1934 ("Act"),[1] and Rule 17d–2 thereunder,[2] notice is hereby given that on October 15, 2010, BATS Exchange, Inc. ("BATS"), BATS Y-Exchange, Inc. ("BATS Y"), Chicago Board Options Exchange, Inc. ("CBOE")[3], Chicago Stock Exchange, Inc. ("CHX"), EDGA Exchange, Inc. ("EDGA"), EDGX Exchange, Inc. ("EDGX"), Financial Industry Regulatory Authority, Inc. ("FINRA"), The NASDAQ Stock Market LLC ("NASDAQ"), NASDAQ OMX BX, Inc., NASDAQ OMX PHLX LLC ("PHLX"), National Stock Exchange, Inc. ("NSX"), New York Stock Exchange LLC ("NYSE"), NYSE Amex LLC ("NYSE Amex"), and NYSE Arca, Inc. ("NYSE Arca") (together, the "Participating Organizations" or the "Parties") filed with the Securities and Exchange Commission ("Commission" or "SEC") a plan for the allocation of regulatory responsibilities with respect to certain Regulation NMS Rules listed in Exhibit A to the Plan ("17d–2 Plan" or the "Plan"). The Commission is publishing this notice to solicit comments on the 17d–2 Plan from interested persons.

[1] 15 U.S.C. 78q(d).

[2] 17 CFR 240.17d–2.

[3] CBOE's allocation of certain regulatory responsibilities under this Agreement is limited to the activities of the CBOE Stock Exchange, LLC, a facility of CBOE.

I. Introduction

Section 19(g)(1) of the Act,[4] among other things, requires every self-regulatory organization ("SRO") registered as either a national securities exchange or national securities association to examine for, and enforce compliance by, its members and persons associated with its members with the Act, the rules and regulations thereunder, and the SRO's own rules, unless the SRO is relieved of this responsibility pursuant to Section 17(d) or Section 19(g)(2) of the Act.[5] Without this relief, the statutory obligation of each individual SRO could result in a pattern of multiple examinations of broker-dealers that maintain memberships in more than one SRO ("common members"). Such regulatory duplication would add unnecessary expenses for common members and their SROs.

Section 17(d)(1) of the Act[6] was intended, in part, to eliminate unnecessary multiple examinations and regulatory duplication.[7] With respect to a common member, Section 17(d)(1) authorizes the Commission, by rule or order, to relieve an SRO of the responsibility to receive regulatory reports, to examine for and enforce compliance with applicable statutes, rules, and regulations, or to perform other specified regulatory functions.

To implement Section 17(d)(1), the Commission adopted two rules: Rule 17d–1 and Rule 17d–2 under the Act.[8] Rule 17d–1 authorizes the Commission to name a single SRO as the designated examining authority ("DEA") to examine common members for compliance with the financial responsibility requirements imposed by the Act, or by Commission or SRO rules.[9] When an SRO has been named as a common member's DEA, all other SROs to which the common member belongs are relieved of the responsibility to examine the firm for compliance with the applicable financial responsibility rules. On its face, Rule 17d–1 deals only with an SRO's obligations to enforce member compliance with financial responsibility requirements. Rule 17d–1 does not relieve an SRO from its obligation to examine a common member for compliance with its own rules and provisions of the federal securities laws governing matters other than financial responsibility, including sales practices and trading activities and practices.

To address regulatory duplication in these and other areas, the Commission adopted Rule 17d–2 under the Act.[10] Rule 17d–2 permits SROs to propose joint plans for the allocation of regulatory responsibilities with respect to their common members. Under paragraph (c) of Rule 17d–2, the Commission may declare such a plan effective if, after providing for appropriate notice and comment, it determines that the plan is necessary or appropriate in the public interest and for the protection of investors; to foster cooperation and coordination among the SROs; to remove impediments to, and foster the development of, a national market system and a national clearance and settlement system; and is in conformity with the factors set forth in Section 17(d) of the Act. Commission approval of a plan filed pursuant to Rule 17d–2 relieves an SRO of those regulatory responsibilities allocated by the plan to another SRO.

II. Proposed Plan

The proposed 17d–2 Plan is intended to reduce regulatory duplication for firms that are common members of both FINRA and one or more exchanges that are a Party to the proposed 17d–2 Plan. Pursuant to the proposed 17d–2 Plan, FINRA would assume certain examination and enforcement responsibilities for common members with respect to certain applicable laws, rules, and regulations.

The text of the Plan delineates the proposed regulatory responsibilities with respect to the Parties. Included in the proposed Plan is an exhibit (the "Covered Regulation NMS Rules") that lists the Federal securities laws, rules, and regulations, for which FINRA would bear responsibility under the Plan for overseeing and enforcing with respect to members of a Participating Organization that are also members of FINRA and the associated persons therewith ("Dual Members").

Specifically, under the 17d–2 Plan, FINRA would assume examination and enforcement responsibility relating to compliance by Dual Members with the Covered Regulation NMS Rules. Covered Regulation NMS Rules would not include the application of any rule of a Participating Organization, or any rule or regulation under the Act, to the extent that it pertains to violations of insider trading activities, because such matters are covered by a separate multiparty agreement under Rule 17d–2.[11] Under the Plan, the Participating Organizations would retain full responsibility for surveillance and enforcement with respect to trading activities or practices involving its own marketplace.[12]

The text of the proposed 17d–2 Plan is as follows:

Agreement for the Allocation of Regulatory Responsibility for the Covered Regulation NMS Rules pursuant to § 17(d) of the Securities Exchange Act of 1934, 15 U.S.C. § 78q(d), and Rule 17d–2 Thereunder

This agreement (the "Agreement") by and among BATS Exchange, Inc. ("BATS"), BATS Y–Exchange, Inc. ("BATS Y"), Chicago Board Options Exchange, Inc. ("CBOE")[13], Chicago Stock Exchange, Inc. ("CHX"), EDGA Exchange, Inc. ("EDGA"), EDGX Exchange, Inc. ("EDGX"), Financial Industry Regulatory Authority, Inc. ("FINRA"), The NASDAQ Stock Market LLC ("NASDAQ"), NASDAQ OMX BX, Inc., NASDAQ OMX PHLX, Inc., National Stock Exchange, Inc. ("NSX"), New York Stock Exchange LLC ("NYSE"), NYSE Amex LLC ("NYSE Amex"), and NYSE Arca, Inc. ("NYSE Arca") (together, the "Participating Organizations"), is made pursuant to § 17(d) of the Securities Exchange Act of 1934 (the "Act" or "SEA"), 15 U.S.C. § 78q(d), and Rule 17d–2 thereunder, which allow for plans to allocate regulatory responsibility among self-regulatory organizations ("SROs").

WHEREAS, the Participating Organizations desire to: (a) foster cooperation and coordination among the SROs; (b) remove impediments to, and foster the development of, a national market system; (c) strive to protect the interest of investors; and (d) eliminate duplication in their examination and enforcement of SEA Rules 611(a) and (b) and 612 (the "Covered Regulation NMS Rules");

WHEREAS, the Participating Organizations are interested in

[4] 15 U.S.C. 78s(g)(1).

[5] 15 U.S.C. 78q(d) and 15 U.S.C. 78s(g)(2), respectively.

[6] 15 U.S.C. 78q(d)(1).

[7] *See* Securities Act Amendments of 1975, Report of the Senate Committee on Banking, Housing, and Urban Affairs to Accompany S. 249, S. Rep. No. 94–75, 94th Cong., 1st Session 32 (1975).

[8] 17 CFR 240.17d–1 and 17 CFR 240.17d–2, respectively.

[9] *See* Securities Exchange Act Release No. 12352 (April 20, 1976), 41 FR 18808 (May 7, 1976).

[10] *See* Securities Exchange Act Release No. 12935 (October 28, 1976), 41 FR 49091 (November 8, 1976).

[11] *See* Securities Exchange Act Release No. 58350 (August 13, 2008), 73 FR 48247 (August 18, 2008) (File No. 4–566) (notice of filing of proposed plan). *See also* Securities Exchange Act Release No. 58536 (September 12, 2008) (File No. 4–566) (order approving and declaring effective the plan). The Certification identifies several Common Rules that may also be addressed in the context of regulating insider trading activities pursuant to the proposed separate multiparty agreement.

[12] *See* paragraph 1 of the proposed 17d–2 Plan.

[13] CBOE's allocation of certain regulatory responsibilities under this Agreement is limited to the activities of the CBOE Stock Exchange, LLC, a facility of CBOE.

allocating regulatory responsibilities with respect to broker-dealers that are members of more than one Participating Organization (the "Common Members") relating to the examination and enforcement of the Covered Regulation NMS Rules; and

WHEREAS, the Participating Organizations will request regulatory allocation of these regulatory responsibilities by executing and filing with the Securities and Exchange Commission ("Commission" or "SEC") a plan for the above stated purposes (this Agreement) pursuant to the provisions of § 17(d) of the Act, and Rule 17d–2 thereunder, as described below.

NOW, THEREFORE, in consideration of the mutual covenants contained hereafter, and other valuable consideration to be mutually exchanged, the Participating Organizations hereby agree as follows:

1. *Assumption of Regulatory Responsibility.* The Designated Regulation NMS Examining Authority (the "DREA") shall assume examination and enforcement responsibilities relating to compliance by Common Members with the Covered Regulation NMS Rules ("Regulatory Responsibility"). A list of the Covered Regulation NMS Rules is attached hereto as Exhibit A. FINRA shall serve as DREA for Common Members that are members of FINRA. The Designated Examining Authority pursuant to SEA Rule 17d–1 ("DEA") shall serve as DREA for Common Members that are not members of FINRA. Notwithstanding anything herein to the contrary, it is explicitly understood that the term "Regulatory Responsibility" does not include, and each of the Participating Organizations shall retain full responsibility for examination, surveillance and enforcement with respect to trading activities or practices involving its own marketplace unless otherwise allocated pursuant to a separate Rule 17d–2 Agreement. Whenever a Common Member ceases to be a member of its DREA, the DREA shall promptly inform the Common Member's DEA, which will become such Common Member's new DREA.

2. *No Retention of Regulatory Responsibility.* The Participating Organizations do not contemplate the retention of any responsibilities with respect to the regulatory activities being assumed by the DREA under the terms of this Agreement. Nothing in this Agreement will be interpreted to prevent a DREA from entering into Regulatory Services Agreement(s) to perform its Regulatory Responsibility.

3. *No Charge.* A DREA shall not charge Participating Organizations for performing the Regulatory Responsibility under this Agreement.

4. *Applicability of Certain Laws, Rules, Regulations or Orders.* Notwithstanding any provision hereof, this Agreement shall be subject to any statute, or any rule or order of the SEC. To the extent such statute, rule, or order is inconsistent with one or more provisions of this Agreement, the statute, rule, or order shall supersede the provision(s) hereof to the extent necessary to be properly effectuated and the provision(s) hereof in that respect shall be null and void.

5. *Customer Complaints.* If a Participating Organization receives a copy of a customer complaint relating to a DREA's Regulatory Responsibility as set forth in this Agreement, the Participating Organization shall promptly forward to such DREA a copy of such customer complaint. It shall be such DREA's responsibility to review and take appropriate action in respect to such complaint.

6. *Parties to Make Personnel Available as Witnesses.* Each Participating Organization shall make its personnel available to the DREA to serve as testimonial or non-testimonial witnesses as necessary to assist the DREA in fulfilling the Regulatory Responsibility allocated under this Agreement. The DREA shall provide reasonable advance notice when practicable and shall work with a Participating Organization to accommodate reasonable scheduling conflicts within the context and demands as the entity with ultimate regulatory responsibility. The Participating Organization shall pay all reasonable travel and other expenses incurred by its employees to the extent that the DREA requires such employees to serve as witnesses, and provide information or other assistance pursuant to this Agreement.

7. *Sharing of Work-Papers, Data and Related Information.*

a. Sharing. A Participating Organization shall make available to the DREA information necessary to assist the DREA in fulfilling the Regulatory Responsibility assumed under the terms of this Agreement. Such information shall include any information collected by a Participating Organization in the course of performing its regulatory obligations under the Act, including information relating to an on-going disciplinary investigation or action against a member, the amount of a fine imposed on a member, financial information, or information regarding proprietary trading systems gained in the course of examining a member ("Regulatory Information"). This Regulatory Information shall be used by the DREA solely for the purposes of fulfilling the DREA's Regulatory Responsibility.

b. No Waiver of Privilege. The sharing of documents or information between the parties pursuant to this Agreement shall not be deemed a waiver as against third parties of regulatory or other privileges relating to the discovery of documents or information.

8. *Special or Cause Examinations and Enforcement Proceedings.* Nothing in this Agreement shall restrict or in any way encumber the right of a Participating Organization to conduct special or cause examinations of a Common Member, or take enforcement proceedings against a Common Member as a Participating Organization, in its sole discretion, shall deem appropriate or necessary.

9. *Dispute Resolution Under this Agreement.*

a. Negotiation. The Participating Organizations will attempt to resolve any disputes through good faith negotiation and discussion, escalating such discussion up through the appropriate management levels until reaching the executive management level. In the event a dispute cannot be settled through these means, the Participating Organizations shall refer the dispute to binding arbitration.

b. Binding Arbitration. All claims, disputes, controversies, and other matters in question between the Participating Organizations to this Agreement arising out of or relating to this Agreement or the breach thereof that cannot be resolved by the Participating Organizations will be resolved through binding arbitration. Unless otherwise agreed by the Participating Organizations, a dispute submitted to binding arbitration pursuant to this paragraph shall be resolved using the following procedures:

(i) The arbitration shall be conducted in a city selected by the DREA in which it maintains a principal office or where otherwise agreed to by the Participating Organizations in accordance with the Commercial Arbitration Rules of the American Arbitration Association and judgment upon the award rendered by the arbitrator may be entered in any court having jurisdiction thereof; and

(ii) There shall be three arbitrators, and the chairperson of the arbitration panel shall be an attorney.

10. *Limitation of Liability.* As between the Participating Organizations, no Participating Organization, including its respective directors, governors, officers, employees and agents, will be liable to any other Participating Organization, or its directors, governors, officers,

employees and agents, for any liability, loss or damage resulting from any delays, inaccuracies, errors or omissions with respect to its performing or failing to perform regulatory responsibilities, obligations, or functions, except (a) as otherwise provided for under the Act, (b) in instances of a Participating Organization's gross negligence, willful misconduct or reckless disregard with respect to another Participating Organization, or (c) in instances of a breach of confidentiality obligations owed to another Participating Organization. The Participating Organizations understand and agree that the regulatory responsibilities are being performed on a good faith and best effort basis and no warranties, express or implied, are made by any Participating Organization to any other Participating Organization with respect to any of the responsibilities to be performed hereunder. This paragraph is not intended to create liability of any Participating Organization to any third party.

11. *SEC Approval.*

a. The Participating Organizations agree to file promptly this Agreement with the SEC for its review and approval. FINRA shall file this Agreement on behalf, and with the explicit consent, of all Participating Organizations.

b. If approved by the SEC, the Participating Organizations will notify their members of the general terms of the Agreement and of its impact on their members.

12. *Subsequent Parties; Limited Relationship.* This Agreement shall inure to the benefit of and shall be binding upon the Participating Organizations hereto and their respective legal representatives, successors, and assigns. Nothing in this Agreement, expressed or implied, is intended or shall: (a) Confer on any person other than the Participating Organizations hereto, or their respective legal representatives, successors, and assigns, any rights, remedies, obligations or liabilities under or by reason of this Agreement, (b) constitute the Participating Organizations hereto partners or participants in a joint venture, or (c) appoint one Participating Organization the agent of the other.

13. *Assignment.* No Participating Organization may assign this Agreement without the prior written consent of the DREAs performing Regulatory Responsibility on behalf of such Participating Organization, which consent shall not be unreasonably withheld, conditioned or delayed; provided, however, that any Participating Organization may assign the Agreement to a corporation controlling, controlled by or under common control with the Participating Organization without the prior written consent of such Participating Organization's DREAs. No assignment shall be effective without Commission approval.

14. *Severability.* Any term or provision of this Agreement that is invalid or unenforceable in any jurisdiction shall, as to such jurisdiction, be ineffective to the extent of such invalidity or unenforceability without rendering invalid or unenforceable the remaining terms and provisions of this Agreement or affecting the validity or enforceability of any of the terms or provisions of this Agreement in any other jurisdiction.

15. *Termination.* Any Participating Organization may cancel its participation in the Agreement at any time upon the approval of the Commission after 180 days written notice to the other Participating Organizations (or in the case of a change of control in ownership of a Participating Organization, such other notice time period as that Participating Organization may choose). The cancellation of its participation in this Agreement by any Participating Organization shall not terminate this Agreement as to the remaining Participating Organizations.

16. *General.* The Participating Organizations agree to perform all acts and execute all supplementary instruments or documents that may be reasonably necessary or desirable to carry out the provisions of this Agreement.

17. *Written Notice.* Any written notice required or permitted to be given under this Agreement shall be deemed given if sent by certified mail, return receipt requested, or by a comparable means of electronic communication to each Participating Organization entitled to receipt thereof, to the attention of the Participating Organization's representative at the Participating Organization's then principal office or by e-mail.

18. *Confidentiality.* The Participating Organizations agree that documents or information shared shall be held in confidence, and used only for the purposes of carrying out their respective regulatory obligations under this Agreement, provided, however, that each Participating Organization may disclose such documents or information as may be required to comply with applicable regulatory requirements or requests for information from the SEC. Any Participating Organization disclosing confidential documents or information in compliance with applicable regulatory or oversight requirements will request confidential treatment of such information. No Participating Organization shall assert regulatory or other privileges as against the other with respect to Regulatory Information that is required to be shared pursuant to this Agreement.

19. *Regulatory Responsibility.* Pursuant to Section 17(d)(1)(A) of the Act, and Rule 17d–2 thereunder, the Participating Organizations request the SEC, upon its approval of this Agreement, to relieve the Participating Organizations which are participants in this Agreement that are not the DREA as to a Common Member of any and all responsibilities with respect to the matters allocated to the DREA pursuant to this Agreement for purposes of §§ 17(d) and 19(g) of the Act.

20. *Governing Law.* This Agreement shall be deemed to have been made in the State of New York, and shall be construed and enforced in accordance with the law of the State of New York, without reference to principles of conflicts of laws thereof. Each of the Participating Organizations hereby consents to submit to the jurisdiction of the courts of the State of New York in connection with any action or proceeding relating to this Agreement.

21. *Survival of Provisions.* Provisions intended by their terms or context to survive and continue notwithstanding delivery of the regulatory services by the DREA and any expiration of this Agreement shall survive and continue.

22. *Amendment.*

a. This Agreement may be amended to add a new Participating Organization, provided that such Participating Organization does not assume regulatory responsibility, solely by an amendment executed by all applicable DREAs and such new Participating Organization. All other Participating Organizations expressly consent to allow such DREAs to jointly add new Participating Organizations to the Agreement as provided above. Such DREAs will promptly notify all Participating Organizations of any such amendments to add a new Participating Organization.

b. All other amendments must be made approved by each Participating Organization. All amendments, including adding a new Participating Organization, must be filed with and approved by the Commission before they become effective.

23. *Effective Date.* The Effective Date of this Agreement will be the date the SEC declares this Agreement to be effective pursuant to authority conferred

by § 17(d) of the Act, and Rule 17d–2 thereunder.

24. *Counterparts.* This Agreement may be executed in any number of counterparts, including facsimile, each of which will be deemed an original, but all of which taken together shall constitute one single agreement among the Participating Organizations.

* * * * *

EXHIBIT A

COVERED REGULATION NMS RULES

SEA Rule 611(a)—Order Protection Rule.—Reasonable Policies and Procedures.
SEA Rule 611(b)—Order Protection Rule.—Exceptions.
SEA Rule 612—Minimum Pricing Increment.

III. Date of Effectiveness of the Proposed Plan and Timing for Commission Action

Pursuant to Section 17(d)(1) of the Act [14] and Rule 17d–2 thereunder,[15] after November 29, 2010, the Commission may, by written notice, declare the proposed Plan, File No. 4–618, to be effective if the Commission finds that the plan is necessary or appropriate in the public interest and for the protection of investors, to foster cooperation and coordination among self-regulatory organizations, or to remove impediments to and foster the development of the national market system and a national system for the clearance and settlement of securities transactions and in conformity with the factors set forth in Section 17(d) of the Act.

IV. Solicitation of Comments

In order to assist the Commission in determining whether to approve the proposed 17d–2 Plan and to relieve the Participating Organizations of the responsibilities which would be assigned to FINRA, interested persons are invited to submit written data, views, and arguments concerning the foregoing. Comments may be submitted by any of the following methods:

Electronic Comments

- Use the Commission's Internet comment form (*http://www.sec.gov/rules/other.shtml*); or
- Send an e-mail to *rule-comments@sec.gov*. Please include File Number 4–618 on the subject line.

Paper Comments

- Send paper comments in triplicate to Elizabeth M. Murphy, Secretary, Securities and Exchange Commission, Station Place, 100 F Street, NE., Washington, DC 20549–1090.

All submissions should refer to File Number 4–618. This file number should be included on the subject line if e-mail is used. To help the Commission process and review your comments more efficiently, please use only one method. The Commission will post all comments on the Commission's Internet Web site (*http://www.sec.gov/rules/other.shtml*). Copies of the submission, all subsequent amendments, all written statements with respect to the proposed plan that are filed with the Commission, and all written communications relating to the proposed plan between the Commission and any person, other than those that may be withheld from the public in accordance with the provisions of 5 U.S.C. 552, will be available for Web site viewing and printing in the Commission's Public Reference Room, on official business days between the hours of 10 a.m. and 3 p.m. Copies of the plan also will be available for inspection and copying at the principal offices of the Participating Organizations. All comments received will be posted without change; the Commission does not edit personal identifying information from submissions. You should submit only information that you wish to make available publicly. All submissions should refer to File Number 4–618 and should be submitted on or before November 29, 2010.

For the Commission, by the Division of Trading and Markets, pursuant to delegated authority.[16]

Florence E. Harmon,

Deputy Secretary.

[FR Doc. 2010–28185 Filed 11–5–10; 8:45 am]

BILLING CODE 8011–01–P

[14] 15 U.S.C. 78q(d)(1).

[15] 17 CFR 240.17d–2.

[16] 17 CFR 200.30–3(a)(34).

SECURITIES AND EXCHANGE COMMISSION

[File No. 500–1]

8000, Inc.; Order of Suspension of Trading

November 4, 2010.

It appears to the Securities and Exchange Commission that there is a lack of current and accurate information concerning the securities of 8000, Inc. because of questions regarding the accuracy of statements made by 8000, Inc. in press releases concerning, among other things, a cash dividend the company announced it would pay stockholders and Monk's Den, an investment program and online investor network the company disclosed it acquired in September 2010.

The Commission is of the opinion that the public interest and the protection of investors require a suspension of trading in the securities of 8000, Inc.

Therefore, it is ordered, pursuant to Section 12(k) of the Securities Exchange Act of 1934, that trading in the securities of the above-listed company is suspended for the period from 9:30 a.m. EDT on November 4, 2010, through 11:59 p.m. EST on November 17, 2010.

By the Commission.

Jill M. Peterson,

Assistant Secretary.

[FR Doc. 2010–28241 Filed 11–4–10; 4:15 pm]

BILLING CODE 8011–01–P

SECURITIES AND EXCHANGE COMMISSION

[Release No. IC–29497; File No. 4–619]

President's Working Group Report on Money Market Fund Reform

AGENCY: Securities and Exchange Commission.

ACTION: Request for comment.

SUMMARY: The Securities and Exchange Commission ("Commission" or "SEC") is seeking comment on the options discussed in the report presenting the results of the President's Working Group on Financial Markets' study of possible money market fund reforms. Public comments on the options discussed in this report will help inform consideration of reform proposals addressing money market funds' susceptibility to runs.

DATES: Comments should be received on or before January 10, 2011.

ADDRESSES: Comments may be submitted by any of the following methods:

Electronic Comments

- Use the Commission's Internet comment form (*http://www.sec.gov/rules/other.shtml*); or
- Send an e-mail to *rule-comments@sec.gov*. Please include File Number 4–619 on the subject line; or
- Use the Federal eRulemaking Portal (*http://www.regulations.gov*). Follow the instructions for submitting comments.

Paper Comments

- Send paper comments in triplicate to Elizabeth M. Murphy, Secretary, Securities and Exchange Commission, 100 F Street, NE., Washington, DC 20549–1090.

All submissions should refer to File Number 4–619. This file number should

be included on the subject line if e-mail is used. To help us process and review your comments more efficiently, please use only one method. The Commission will post all comments on the Commission's Internet Web site (*http://www.sec.gov/rules/other.shtml*). Comments are also available for Web site viewing and printing in the Commission's Public Reference Room, 100 F Street, NE., Washington, DC 20549, on official business days between the hours of 10 am and 3 pm. All comments received will be posted without change; we do not edit personal identifying information from submissions. You should submit only information that you wish to make available publicly.

FOR FURTHER INFORMATION CONTACT: Daniele Marchesani or Sarah ten Siethoff at (202) 551–6792, Division of Investment Management, Securities and Exchange Commission, 100 F Street, NE., Washington, DC 20549–8549.

SUPPLEMENTARY INFORMATION:

I. The President's Working Group Report

Following the recommendation in the U.S. Department of the Treasury's 2009 paper on *Financial Regulatory Reform: A New Foundation,* the President's Working Group on Financial Markets ("PWG") conducted a study of possible reforms that might mitigate money market funds' susceptibility to runs.[1] The results of this study are included in the report issued on October 21, 2010 and attached to this release as an Appendix (the "Report").[2]

The Report expresses support for the new rules regulating money market funds that the Commission approved last February.[3] These new rules seek to better protect money market fund investors in times of financial market turmoil and lessen the possibility that money market funds will not be able to withstand stresses similar to those experienced in 2007 and 2008.[4] When we adopted these rules, we recognized that they were a first step to addressing regulatory concerns as the events of 2007 and 2008 raised the question of whether further, more fundamental changes to the regulatory structure governing money market funds may be warranted.[5]

The Report identifies the features that make money market funds susceptible to runs as well as the systemic implications of the run on prime money market funds that occurred in September 2008. The Report states that the Commission's new rules alone could not be expected to prevent a run of the type experienced in September 2008. Accordingly, the Report outlines possible reforms that could supplement the new rules we adopted and, individually or in combination, further reduce money market funds' susceptibility to runs and the related systemic risk. Some of the measures discussed in the Report could be implemented by the Commission under our existing statutory authority; others would require new legislation, coordination by multiple government agencies, or the creation of new private entities.[6]

II. Request for Comment

The Commission requests comment on the Report. Comments received will better enable the Commission and the newly-established Financial Stability Oversight Council (which will be taking over the work of the PWG in this area) to consider the options discussed in this Report to identify those most likely to materially reduce money market funds' susceptibility to runs and to pursue their implementation. As the Report states, we anticipate that following the comment period a series of meetings will be held in Washington, DC with various stakeholders, interested persons, experts, and regulators to discuss the options in the Report.

We request comments on the options described in the Report both individually and in combination. Commenters should address the effectiveness of the options in mitigating systemic risks associated with money market funds, as well as their potential impact on money market fund investors, fund managers, issuers of short-term debt and other stakeholders. We also are interested in comments on other issues commenters believe are relevant to further money market fund reform, including other approaches for lessening systemic risk not identified in the Report. We urge commenters to submit empirical data and other information in support of their comments.

Dated: November 3, 2010.

By the Commission.

Elizabeth M. Murphy,

Secretary.

BILLING CODE 8011–01–P

[1] The members of the PWG include the Secretary of the Treasury Department (as chairman of the PWG), the Chairman of the Board of Governors of the Federal Reserve System, the Chairman of the SEC, and the Chairman of the Commodity Futures Trading Commission.

[2] The Report is also available at *http://treas.gov/press/releases/docs/10.21%20PWG%20Report%20Final.pdf.*

[3] *Money Market Fund Reform,* Investment Company Act Release No. 29132 (Feb. 23, 2010) [75 FR 10060 (Mar. 4, 2010)] ("SEC Adopting Release").

[4] The new rules further limit the credit, liquidity, and interest rate risks money market funds may assume and require fund managers to stress test their portfolios against potential economic shocks. They also require money market funds to improve their disclosure to investors and the Commission and provide a means to wind down the operations of a fund that "breaks the buck" or suffers a run, in an orderly way that is fair to the fund's investors and reduces the risk of market losses that could spread to other funds. For a discussion of the market stresses experienced by money market funds in 2007 and 2008, *see Money Market Fund Reform,* Investment Company Act Release No. 28807 (June 30, 2009) [74 FR 32688 (July 8, 2009)], at section II.D ("SEC Proposing Release").

[5] *See* SEC Adopting Release, *supra* note 3, at section I. In proposing the new rules, we had requested comment on additional, more fundamental regulatory changes, including several of those discussed in the Report. *See* SEC Proposing Release, *supra* note 4, at section III. Following the adoption of the new rules, the Commission has continued to explore more significant changes in light of the comments received on that release and through our staff's work within the PWG.

[6] In particular, the Report notes that reforms may be needed to avoid migration of institutional money market fund assets into unregulated or less regulated money market investment vehicles. Without new restrictions on such investment vehicles, money market reform may motivate some investors to shift assets into money market fund substitutes that may pose greater systemic risk than registered money market funds. *See* section 3.h of the Report.

APPENDIX

Report of the President's Working Group on Financial Markets

Money Market Fund Reform Options

October 2010

BILLING CODE 8011–01–C

Table of Contents

Executive Summary

1. Introduction and Background
   a. Money Market Funds
   b. MMFs' Susceptibility to Runs
   c. MMFs in the Recent Financial Crisis
2. The SEC's Changes to the Regulation of MMFs
   a. SEC Regulatory Changes
   b. Need for Further Reform To Reduce Susceptibility to Runs
3. Policy Options for Further Reducing the Risks of Runs on MMFs
   a. Floating Net Asset Values
   b. Private Emergency Liquidity Facility for MMFs
   c. Mandatory Redemptions in Kind
   d. Insurance for MMFs
   e. A Two-Tier System of MMFs, With Enhanced Protections for Stable NAV MMFs
   f. A Two-Tier System of MMFs, With Stable NAV MMFs Reserved for Retail Investors
   g. Regulating Stable NAV MMFs as Special Purpose Banks
   h. Enhanced Constraints on Unregulated MMF Substitutes

Executive Summary

Several key events during the financial crisis underscored the vulnerability of the financial system to systemic risk. One such event was the September 2008 run on money market funds (MMFs), which began after the failure of Lehman Brothers Holdings, Inc., caused significant capital losses at a large MMF. Amid broad concerns about the safety of MMFs and other financial institutions, investors rapidly redeemed MMF shares, and the cash needs of MMFs exacerbated strains in short-term funding markets. These strains, in turn, threatened the broader economy, as firms and institutions dependent upon those markets for short-term financing found credit increasingly difficult to obtain. Forceful government action was taken to stop the run, restore investor confidence, and prevent the development of an even more severe recession. Even so, short-term funding markets remained disrupted for some time.

The Treasury Department proposed in its *Financial Regulatory Reform: A New Foundation* (2009), that the President's Working Group on Financial Markets (PWG) prepare a report on fundamental changes needed to address systemic risk and to reduce the susceptibility of MMFs to runs. Treasury stated that the Securities and Exchange Commission's (SEC) rule amendments to strengthen the regulation of MMFs—which were in development at the time and which subsequently have been adopted—should enhance investor protection and mitigate the risk of runs. However, Treasury also noted that those rule changes could not, by themselves, be expected to prevent a run on MMFs of the scale experienced in September 2008. While suggesting a number of areas for review, Treasury added that the PWG should consider ways to mitigate possible adverse effects of further regulatory changes, such as the potential flight of assets from MMFs to less regulated or unregulated vehicles.

This report by the PWG responds to Treasury's call.[7] The PWG undertook a study of possible further reforms that, individually or in combination, might mitigate systemic risk by complementing the SEC's changes to MMF regulation. The PWG supports the SEC's recent actions and agrees with the SEC that more should be done to address MMFs' susceptibility to runs. This report details a number of options for further reform that the PWG requests be examined by the newly established Financial Stability Oversight Council (FSOC). These options range from measures that could be implemented by the SEC under current statutory authorities to broader changes that would require new legislation, coordination by multiple government agencies, and the creation of new private entities. For example, a new requirement that MMFs adopt floating net asset values (NAVs) or that large funds meet redemption requests in kind could be accomplished by SEC rule amendments. In contrast, the introduction of a private emergency liquidity facility, insurance for MMFs, conversion of MMFs to special purpose banks, or a two-tier system of MMFs that might combine some of the other measures likely would involve a coordinated effort by the SEC, bank regulators, and financial firms.

Importantly, this report also emphasizes that the efficacy of the options presented herein would be enhanced considerably by the imposition of new constraints on less regulated or unregulated MMF substitutes, such as offshore MMFs, enhanced cash funds, and other stable value vehicles. Without new restrictions on such investment vehicles, which would require legislation, new rules that further constrain MMFs may motivate some investors to shift assets into MMF substitutes that may pose greater systemic risk than MMFs.

The PWG requests that the FSOC consider the options discussed in this report to identify those most likely to materially reduce MMFs' susceptibility to runs and to pursue their implementation. To assist the FSOC in any analysis, the SEC, as the regulator of MMFs, will solicit public comments, including the production of empirical data and other information in support of such comments. A notice and request for comment will be published in the near future. Following a comment period, a series of meetings will be held in Washington, DC with various stakeholders, interested persons, experts, and regulators.

MMFs Are Susceptible to Runs

MMFs are mutual funds. They are investment vehicles that act as intermediaries between shareholders who desire liquid investments and borrowers who seek term funding. With nearly $3 trillion in assets under management, MMFs are important providers of credit to businesses, financial institutions, and governments. In addition, these funds are significant investors in some short-term funding markets.

Like other mutual funds, MMFs are regulated under the Investment Company Act of 1940 (ICA). In addition to ICA requirements for all mutual funds, MMFs must comply with SEC rule 2a–7, which permits these funds to maintain a stable net asset value (NAV) per share, typically $1. However, if the mark-to-market per-share value of a fund's assets falls more than one-half of 1 percent (to below $0.995), the fund must reprice its shares, an event colloquially known as "breaking the buck."

The events of September 2008 demonstrated that MMFs are susceptible to runs. In addition, those events proved that runs on MMFs not only harm fund shareholders, but may also cause severe dislocations in short-term funding markets that curtail short-term financing for companies and financial institutions and that ultimately result in a decline in economic activity. Thus, reducing the susceptibility of MMFs to runs and mitigating the effects of possible runs are important components of the overall policy goals of decreasing and containing systemic risks.

MMFs are vulnerable to runs because shareholders have an incentive to redeem their shares before others do when there is a perception that the fund might suffer a loss. Several features of MMFs, their sponsors, and their investors contribute to this incentive. For example, although a stable, rounded $1 NAV fosters an expectation of safety, MMFs are subject to credit, interest-rate, and liquidity risks. Thus, when a fund

[7] The PWG (established by Executive Order 12631) is comprised of the Secretary of the Treasury (who serves as its Chairman), the Chairman of the Federal Reserve Board of Governors, the Chairman of the Securities and Exchange Commission, and the Chairman of the Commodity Futures Trading Commission.

incurs even a small loss because of those risks, the stable, rounded NAV may subsidize shareholders who choose to redeem at the expense of the remaining shareholders. A larger loss that causes a fund's share price to drop below $1 per share (and thus break the buck) may prompt more substantial sudden, destabilizing redemptions. Moreover, although the expectations of safety fostered by the stable, rounded $1 NAV suggest parallels to an insured demand deposit account, MMFs have no formal capital buffers or insurance to prevent NAV declines; MMFs instead have relied historically on discretionary sponsor capital support to maintain stable NAVs. Accordingly, uncertainty about the availability of such support during crises may contribute to runs. Finally, because investors have come to view MMFs as extremely safe vehicles that meet all withdrawal requests on demand (and that are, in this sense, similar to banks), MMFs have attracted highly risk-averse investors who are particularly prone to flight when they perceive the possibility of a loss. These features likely mutually reinforce each other in times of crisis.

The SEC's New Rules

In January 2010, the SEC adopted new rules for MMFs in order to make these funds more resilient and less likely to break the buck. The regulatory changes that mitigate systemic risks fall into three principal categories. First, the new rules enhance risk-limiting constraints on MMF portfolios by introducing new liquidity requirements, imposing additional credit-quality standards, and reducing the maximum allowable weighted average maturity of funds' portfolios. Funds also are required to stress test their ability to maintain a stable NAV. Second, the SEC's new rules permit a fund that is breaking the buck to suspend redemptions promptly and liquidate its portfolio in an orderly manner to limit contagion effects on other funds. Third, the new rules place more stringent constraints on repurchase agreements that are collateralized with private debt instruments rather than government securities.

The Need for Further Measures

The SEC's new rules make MMFs more resilient and less risky and therefore reduce the likelihood of runs on MMFs, increase the size of runs that MMFs can withstand, and mitigate the systemic risks they pose. However, the SEC's new rules address only some of the features that make MMFs susceptible to runs, and more should be done to address systemic risk and the structural vulnerabilities of MMFs to runs. Indeed, the Chairman of the SEC characterized the new rules as "a first step" in strengthening MMFs, and Treasury's *Financial Regulatory Reform: A New Foundation* (2009) anticipated that measures taken by the SEC "should not, by themselves, be expected to prevent a run on MMFs of the scale experienced in September 2008."

Mitigating the risk of runs on MMFs is especially important because the events of September 2008 may have created an expectation that, in a future crisis, the government may provide support for MMFs at minimal cost in order to minimize harm to MMF investors, short-term funding markets, and the economy. Persistent expectations of unpriced government support distort incentives in the MMF industry and pricing in short-term funding markets, as well as heighten the systemic risk posed by MMFs. It is thus essential that MMFs be required to internalize fully the costs of liquidity or other risks associated with their operation.

In formulating reforms for MMFs, policymakers should aim primarily at mitigating systemic risk and containing the contagious effect that strains at individual MMFs can have on other MMFs and on the broad financial system. Importantly, preventing any individual MMF from ever breaking the buck is not a practical policy objective—though the new SEC rules for MMFs should help ensure that such events remain rare and thus constitute a limited means of containing systemic risk.

Policy Options

The policy options discussed in this report may help further mitigate the susceptibility of MMFs to runs. Some of these options may be adopted by the SEC under its existing authorities. Others would require legislation and action by multiple government agencies and the MMF industry.

(a) *Floating net asset values.* A stable NAV has been a key element of the appeal of MMFs to investors, but a stable, rounded NAV also heightens funds' vulnerability to runs. Moving to a floating NAV would help remove the perception that MMFs are risk-free and reduce investors' incentives to redeem shares from distressed funds. However, the elimination of the stable NAV for MMFs would be a dramatic change for a nearly $3 trillion asset-management sector that has been built around the stable share price. Such a change may have several unintended consequences, including: (i) Reductions in MMFs' capacity to provide short-term credit due to lower investor demand; (ii) a shift of assets to less regulated or unregulated MMF substitutes such as offshore MMFs, enhanced cash funds, and other stable value vehicles; and (iii) unpredictable investor responses as MMF NAVs begin to fluctuate more frequently.

(b) *Private emergency liquidity facilities for MMFs.* The liquidity risk of MMFs contributes importantly to their vulnerability to runs, and an external liquidity backstop to augment the SEC's new liquidity requirements for MMFs would help mitigate this risk. Such a backstop could buttress MMFs' ability to withstand outflows, internalize much of the liquidity protection costs for the MMF industry, offer efficiency gains from risk pooling, and reduce contagion effects. A liquidity facility would preserve fund advisers' incentives for not taking excessive risks because it would not protect funds from capital losses. As such, a liquidity facility alone may not prevent broader runs on MMFs triggered by concerns about widespread credit losses. Importantly, significant capacity, structure, pricing, and operational hurdles would have to be overcome to ensure that such a facility would be effective during crises, that it would not unduly distort incentives, and that it would not favor certain types of MMF business models.

(c) *Mandatory redemptions in kind.* When investors make large redemptions from MMFs, they may impose liquidity costs on other shareholders in the fund by forcing MMFs to sell assets in an untimely manner. A requirement that MMFs distribute large redemptions in kind, rather than in cash, would force these redeeming shareholders to bear their own liquidity costs and thus reduce the incentive to redeem. Depending on whether redeeming shareholders immediately sell the securities received, redemptions in kind may still generate market effects. Moreover, mandating redemptions in kind could present some operational and policy challenges. The SEC, for example, would have to make key judgments regarding when a fund must redeem in kind and how funds would fairly distribute portfolio securities.

(d) *Insurance for MMFs.* Treasury's Temporary Guarantee Program for Money Market Funds helped slow the run on MMFs in September 2008, and some form of insurance for MMF shareholders might be helpful in mitigating the risk of runs in MMFs. Unlike a private liquidity facility, insurance would limit credit losses to shareholders, so appropriate risk-based pricing would be critical in preventing insurance from distorting incentives,

but such pricing might be difficult to achieve in practice. The appropriate scope of coverage also presents a challenge; unlimited coverage would likely cause large shifts of assets from the banking sector to MMFs, but limited insurance might do little to reduce institutional investors' incentives to run from distressed MMFs. The optimal form for insurance—whether it would be private, public, or a mix of the two—is also uncertain, particularly given the recent experience with private financial guarantees.

(e) *A two-tier system of MMFs with enhanced protection for stable NAV funds.* Reforms aimed at reducing MMFs' susceptibility to runs may be particularly effective if they permit investors to select the types of MMFs that best balance their appetite for risk and their preference for yield. Policymakers could allow two types of MMFs: Stable NAV funds, which would be subject to enhanced protections such as, for example, required participation in a private liquidity facility or enhanced regulatory requirements; and floating NAV funds, which would have to comply with certain, but not all, rule 2a–7 restrictions (and which would presumably offer higher yields). Because this two-tier system would permit stable NAV funds to continue to be available, it would reduce the likelihood of a substantial decline in demand for MMFs and large-scale shifts of assets toward unregulated vehicles. At the same time, the forms of protection encompassed by such a system would mitigate the risks associated with stable NAV funds. It would also avoid problems that might be encountered in transitioning the entire MMF industry to a floating NAV. Moreover, during a crisis, a two-tier system might prevent large shifts of assets out of MMFs—and a reduction in credit supplied by the funds—if investors simply shift assets from riskier floating NAV funds toward safer (because of the enhanced protections) stable NAV funds. However, implementation of such a two-tier system would present the same challenges as the introduction of any individual enhanced protections (such as mandated access to a private emergency liquidity facility) that would be required for stable NAV funds, and the effectiveness of a two-tier system would depend on investors' understanding the risks associated with each type of fund.

(f) *A two-tier system of MMFs with stable NAV MMFs reserved for retail investors.* Another approach to the two-tier system already described could distinguish funds by investor type: Stable NAV MMFs could be made available only to retail investors, who could choose between stable NAV and floating NAV funds, while institutional investors would be restricted to floating NAV funds. The run on MMFs in September 2008 was almost exclusively due to redemptions from prime MMFs by institutional investors. Such investors typically have generated greater cash-flow volatility for MMFs than retail investors and have been much quicker to redeem MMF shares from stable NAV funds opportunistically. Hence, this approach would mitigate risks associated with a stable NAV by addressing the investor base of stable NAV funds rather than by mandating other types of enhanced protections for those funds. Such a system also would protect the interests of retail investors by reducing the likelihood that a run might begin in institutional MMFs (as it did in September 2008) and spread to retail funds, while preserving the original purpose of MMFs, which was to provide retail investors with cost-effective, diversified investments in money market instruments. This approach would require the SEC to define who would qualify as retail and institutional investors, and distinguishing those categories will present challenges. In addition, a prohibition on sales of stable NAV MMFs shares to institutional investors may have several of the same unintended consequences as a requirement that all MMFs adopt floating NAVs (see option (a) in this section).

(g) *Regulating stable NAV MMFs as special purpose banks.* Functional similarities between MMF shares and bank deposits, as well as the risk of runs on both, provide a rationale for requiring stable NAV MMFs to reorganize as special purpose banks (SPBs) subject to banking oversight and regulation. As banks, MMFs could have access to government insurance and lender-of-last-resort facilities. An advantage of such a reorganization could be that it uses a well-understood regulatory framework for the mitigation of systemic risk. But while the conceptual basis for this option is fairly straightforward, its implementation might take a broad range of forms and would probably require legislation together with interagency coordination. An important hurdle for successful conversion of MMFs to SPBs may be the very large amounts of equity necessary to capitalize the new banks. In addition, to the extent that deposits in the new SPBs would be insured, the potential government liabilities through deposit insurance would be increased substantially, and the development of an appropriate pricing scheme for such insurance would present some of the same challenges as the pricing of deposit insurance. More broadly, the possible interactions between the new SPBs and the existing banking system would have to be studied carefully by policymakers.

(h) *Enhanced constraints on unregulated MMF substitutes.* New measures intended to mitigate MMF risks may also reduce the appeal of MMFs to many investors. While it is likely that some (particularly retail) investors may move their assets from MMFs to bank deposits if regulation of MMFs becomes too burdensome and meaningfully reduces MMF returns, others may be motivated to shift assets to unregulated funds with stable NAVs, such as offshore MMFs, enhanced cash funds, and other stable value vehicles. Such funds, which typically hold assets similar to those held by MMFs, are vulnerable to runs but are less transparent and less constrained than MMFs, so their growth would likely pose systemic risks. Hence, effective mitigation of this risk may require policy reforms targeting regulatory arbitrage. Reforms of this type generally would require legislation and action by the SEC and other agencies.

1. Introduction and Background

a. Money Market Funds

MMFs are mutual funds that offer individuals, businesses, and governments a convenient and cost-effective means of pooled investing in money market instruments. MMFs provide an economically important service by acting as intermediaries between shareholders who desire liquid investments, often for cash management, and borrowers who seek term funding.

With nearly $3 trillion in assets under management, MMFs are important providers of credit to businesses, financial institutions, and governments. Indeed, these funds play a dominant role in some short-term credit markets. For example, MMFs own almost 40 percent of outstanding commercial paper, roughly two-thirds of short-term state and local government debt, and significant portions of outstanding short-term Treasury and federal agency securities.

Like other mutual funds, MMFs are regulated under the Investment Company Act of 1940 (ICA). In addition to the requirements applicable to other funds under the ICA, MMFs must comply with rule 2a–7, which permits these funds to maintain a "stable" net

asset value (NAV) per share, typically $1, through the use of the "amortized cost" method of valuation. Under this method, securities are valued at acquisition cost, with adjustments for amortization of premium or accretion of discount, instead of at fair market value. To prevent substantial deviations between the $1 share price and the mark-to-market per-share value of the fund's assets (its "shadow NAV"), a MMF must periodically compare the two. If there is a difference of more than one-half of 1 percent (or $0.005 per share), the fund must re-price its shares, an event colloquially known as "breaking the buck."

Historically, the stable NAV has played an important role in distinguishing MMFs from other mutual funds and in facilitating the use of MMFs as cash management vehicles. Rule 2a–7 also imposes credit-quality, maturity, and diversification requirements on MMF portfolios designed to ensure that the funds' investing remains consistent with the objective of maintaining a stable NAV. A MMF's $1 share price is not guaranteed through any form of deposit or other insurance, or otherwise—indeed, MMF prospectuses must state that shares can lose value. However, by permitting amortized cost valuation, rule 2a–7 affords MMFs price stability under normal market conditions.

MMFs pursue a range of investment objectives, with corresponding differences in portfolio composition. For example, tax-exempt MMFs purchase short-term municipal securities and offer tax-exempt income to fund shareholders, while Treasury-only MMFs hold only obligations of the U.S. Treasury. In contrast, prime MMFs invest largely in private debt instruments, such as commercial paper and certificates of deposit, and, commensurate with the greater risks in prime MMF portfolios, they generally pay higher yields than Treasury-only funds.

MMFs are marketed both to retail investors (that is, individuals), for whom MMFs are the only means of investing in many money market instruments, and to institutions, which are often attracted by the convenience and cost efficiency of MMFs, even though many institutional investors have the ability to invest directly in the instruments held by MMFs. Institutional MMFs, which currently account for about two-thirds of the assets under management in MMFs, have grown much faster, on net, in the past two decades than retail funds. The rapid growth of institutional funds has important implications for the MMF industry, because institutional funds tend to have more volatile flows and more yield-sensitive shareholders than retail funds.

MMFs compete with other stable-value, low-risk investments. Because MMFs generally maintain stable NAVs, offer redemptions on demand, and often provide services that compete with those offered to holders of insured deposits (such as transactions services), many retail customers likely consider MMF shares and bank deposits as near substitutes, even if the two classes of products are fundamentally different (most notably because MMF shares are not insured and because MMFs and banks are subject to very different regulatory regimes). Some institutional investors may also view bank deposits and MMFs as near substitutes, although usual limitations on deposit insurance coverage and interest payments on deposits likely reduce the attractiveness of bank deposits for most such investors.[8] Institutional investors also have access to less-regulated MMF substitutes (for example, offshore MMFs, enhanced cash funds, and other stable value vehicles) and may perceive them as near substitutes for MMFs, even if those vehicles are not subject to the protections afforded by rule 2a–7.

b. MMFs' Susceptibility to Runs

In the twenty-seven years since the adoption of rule 2a–7, only two MMFs have broken the buck. In 1994, a small MMF suffered a capital loss because of exposures to interest rate derivatives, but the event passed without significant repercussions. In contrast, as further discussed later, when the Reserve Primary Fund broke the buck in September 2008, it helped ignite a massive run on prime MMFs that contributed to severe dislocations in short-term credit markets and strains on the businesses and institutions that obtain funding in those markets.[9]

Although the run on MMFs in 2008 is itself unique in the history of the industry, the events of 2008 underscored the susceptibility of MMFs to runs. That susceptibility arises because, when shareholders perceive a risk that a fund will suffer losses, each shareholder has an incentive to redeem shares before other shareholders. Five features of MMFs, their sponsors, and their investors principally contribute to this incentive:

(i) *Maturity transformation with limited liquidity resources.* One important economic function of MMFs is their role as intermediaries between shareholders who want liquid investments and borrowers who desire term funding. As such, MMFs offer shares that are payable on demand, but they invest both in cash-like instruments and in short-term securities that are less liquid, including, for example, term commercial paper. Redemptions in excess of MMFs' cash-like liquidity may force funds to sell less liquid assets. When money markets are strained, funds may not be able to obtain full value (that is, amortized cost) for such assets in secondary markets and may incur losses as a consequence. Investors thus have an incentive to redeem shares before a fund has depleted its cash-like instruments (which serve as its liquidity buffer).

(ii) *NAVs rounded to $1.* Share prices of MMFs are rounded to the nearest cent, typically resulting in a $1 NAV per share. The rounding fosters an expectation that MMF share prices will not fluctuate, which exacerbates investors' incentive to run when there is risk that prices will fluctuate. When a MMF that has experienced a small (less than one-half of 1 percent) capital loss redeems shares at the full $1 NAV, it concentrates the loss among the remaining shareholders. Thus, redemptions from such a fund further depress the market value of its assets per share outstanding (its shadow NAV), and redemptions of sufficient scale may cause the fund to break the buck. Early redeemers are therefore more likely to receive the usual $1 NAV than those who wait.

(iii) *Portfolios exposed to credit and interest rate risks.* MMFs invest in securities with credit and interest-rate risks. Although these risks are generally small given the short maturity of the securities and the high degree of portfolio diversification, even a small capital loss, in combination with other features of MMFs, can trigger a significant volume of redemptions. The events of September 2008—when losses on Lehman Brothers Holdings, Inc. (Lehman Brothers) debt instruments caused just one MMF to break the buck and triggered a broad run on MMFs—highlight the fact that credit losses at

[8] Under the Federal Deposit Insurance Corporation's (FDIC) Temporary Liquidity Guarantee Program, coverage limits on noninterest-bearing transaction deposits in FDIC-insured institutions were temporarily lifted beginning in October 2008 and coverage will extend through 2010. Effective December 31, 2010, pursuant to the Dodd-Frank Wall Street Reform and Consumer Protection Act, Public Law 111–203, ("Dodd-Frank Act"), all noninterest-bearing transaction deposits will have unlimited coverage until January 1, 2013. In addition, section 627 of the Dodd-Frank Act repeals the prohibition on banks paying interest on corporate demand deposit accounts effective July 21, 2011.

[9] Section 1(c) contains more detail on the MMF industry's experience during the recent financial crisis.

even a single fund may have serious implications for the whole industry and consequently for the entire financial system.[10]

(iv) *Discretionary sponsor capital support.* MMFs invest in assets that may lose value, but the funds have no formal capital buffers or insurance to maintain their $1 share prices in the event of a loss on a portfolio asset.

The MMF industry's record of maintaining a stable NAV reflects, in part, substantial discretionary intervention by MMF sponsors (that is, fund advisers, their affiliates, and their parent firms) to support funds that otherwise might have broken the buck.[11] Sponsors do not commit to support an MMF in advance, because an explicit commitment may require the sponsor to consolidate the fund on its balance sheet and—if the sponsor is subject to regulatory capital requirements—hold additional regulatory capital against the contingent exposure. Nor is there any requirement that sponsors support ailing MMFs; such a mandate would transform the nature of MMF shares by shifting risks from investors to sponsors and probably would require government supervision and monitoring of sponsors' resources and capital adequacy.[12] Instead, sponsor capital support remains expressly voluntary, and not all MMFs have a sponsor capable of fully supporting its MMFs. Nonetheless, a long history of such support probably has contributed substantially to the perceived safety of MMFs.

However, the possibility that sponsors may become unwilling or unable to provide expected support during a crisis is itself a source of systemic risk. Indeed, sponsor support is probably least reliable when systemic risks are most salient.[13] Moreover, MMFs without deep-pocketed sponsors remain vulnerable to runs that can affect the entire industry. The Reserve Primary Fund was not the only MMF that held Lehman Brothers debt at the time of the Lehman Brothers' bankruptcy in September 2008, but it broke the buck because the Reserve Primary Fund, unlike some of its competitors, had substantial holdings of Lehman Brothers debt and Reserve did not have the resources to support its fund. Investors also recognized the riskiness of sponsor support more broadly during the run on MMFs in 2008. For example, outflows from prime MMFs following the Lehman Brothers bankruptcy tended to be larger among MMFs with sponsors that were themselves under strain (as measured by credit default swap spreads for parent firms or affiliates), indicating that MMF investors quickly redeemed shares on concerns about sponsors' potential inabilities to bolster ailing funds.

(v) *Investors' low risk tolerance and expectations.* Investors have come to view MMF shares as extremely safe, in part because of the funds' stable NAVs and sponsors' record of supporting funds that might otherwise lose value. MMFs' history of maintaining stable value has attracted highly risk-averse investors who are prone to withdraw assets rapidly when losses appear possible.

MMFs, like other mutual funds, commit to redeem shares based on the fund's NAV at the time of redemption. MMFs are under no legal or regulatory requirement to redeem shares at $1; rule 2a–7 only requires that MMFs be managed to maintain a stable NAV. Yet sponsor-supported stable, rounded NAVs and the typical $1 MMF share price foster investors' impressions that MMFs are extremely safe investments. Indeed, the growth of retail MMFs in recent decades may have reflected some substitution from insured deposits at commercial banks, thrifts, and credit unions, particularly as MMFs have offered transactions services and other bank-like functions. Although MMF shares, unlike bank deposits, are not government insured and are not backed by capital to absorb losses, this distinction may have become even less clear to retail investors following the unprecedented government support of MMFs in 2008 and 2009. Furthermore, that recent support may have left even sophisticated institutional investors with the mistaken impression that MMF safety is enhanced because the government stands ready to support the industry again with the same tools employed at the height of the financial crisis.

The growth of institutional MMFs in recent years probably has heightened both the risk aversion of the typical MMF shareholder and the volatility of MMF cash flows. Many institutional investors cannot tolerate fluctuations in share prices for a variety of reasons. In addition, institutional investors are typically more sophisticated than retail investors in obtaining and analyzing information about MMF portfolios and risks, have larger amounts at stake, and hence are quicker to respond to events that may threaten the stable NAV. In fact, institutional MMFs have historically experienced much more volatile flows than retail funds. During the run on MMFs in September 2008, institutional funds accounted for more than 90 percent of the net redemptions from prime MMFs.

The interaction of these five features is critical. Taken alone, each of the features just listed probably would only modestly increase the vulnerability of MMFs to runs, but, in combination, the features tend to amplify and reinforce one another. For example, equity mutual funds perform maturity transformation and take on capital risks, but even after large capital losses, outflows from equity funds tend to be small relative to assets, most likely because equity funds are not marketed for their ability to maintain stable NAVs, do not attract the risk-averse investor base that characterizes MMFs, and offer the opportunity for capital appreciation. If MMFs with rounded NAVs had lacked sponsor support over the past few decades, many might have broken the buck and diminished the expectation of a stable $1 share price. In that case, investors who nonetheless elected to hold shares in such funds might have become more tolerant of risk and less inclined to run. If MMFs had attracted primarily a retail investor base rather than an institutional base, investors might be slower to respond to strains on a MMF. And even a highly risk-averse investor base would not necessarily make MMFs susceptible to runs—and to contagion arising from runs on other MMFs—if funds had a credible means to guarantee their $1 NAVs. Thus, policy responses that diminish the reinforcing interactions among the features discussed herein hold promise for muting overall risks posed by MMFs.

c. MMFs in the Recent Financial Crisis

The turmoil in financial markets in 2007 and 2008 caused severe strains both among MMFs and in the short-term debt markets in which MMFs invest. Beginning in mid-2007, dozens of funds faced losses from holdings of highly

[10] Souring credits and rapid increases in interest rates have adversely affected MMFs on other occasions. For example, beginning in the summer of 2007, MMF exposures to structured investment vehicles and other asset-backed commercial paper caused capital losses at many MMFs, and many MMF sponsors voluntarily provided capital support that prevented some funds from breaking the buck.

[11] For example, more than 100 MMFs received sponsor capital support in 2007 and 2008 because of investments in securities that lost value and because of the run on MMFs in September and October 2008. *See* Securities and Exchange Commission (2009) "Money Market Reform: Proposed Rule," pp. 13–14, 17, and notes 38 and 54.

[12] Even discretionary support for MMFs may lead to concerns about the safety and soundness of MMF sponsors. Sponsors that foster expectations of such support may be granting a form of implicit recourse that is not reflected on sponsors' balance sheets or in their regulatory capital ratios, and such implicit recourse may contribute to broader systemic risk.

[13] Other forms of discretionary financial support, such as that provided by dealers for auction rate securities, did not fare well during the financial crisis.

rated asset-backed commercial paper (ABCP) issued by structured investment vehicles (SIVs), some of which had exposures to the subprime mortgage market. Fear of such losses at one MMF caused that fund to experience a substantial run in August 2007, which was brought under control when the fund's sponsor purchased more than $5 billion of illiquid securities from the fund. Indeed, financial support from MMF sponsors in recent years probably prevented a number of funds from breaking the buck because of losses on SIV paper.

The crisis for MMFs worsened considerably in September 2008 with the bankruptcy of Lehman Brothers on September 15 and mounting concerns about other issuers of commercial paper, particularly financial firms. The Reserve Primary Fund, a $62 billion MMF, held $785 million in Lehman Brothers debt on the day of Lehman Brothers' bankruptcy and immediately began experiencing a run—shareholders requested redemptions of approximately $40 billion in just two days. In order to meet the redemptions, the Reserve Primary Fund depleted its cash reserves and began seeking to sell its portfolio securities, which further depressed their valuations. Unlike other MMFs that held distressed securities, the Reserve Primary Fund had no affiliate with sufficient resources to support its $1 NAV, and Reserve announced on September 16 that its Primary Fund would break the buck and re-price its shares at $0.97. On September 22, the SEC issued an order permitting the suspension of redemptions in certain Reserve MMFs to permit their orderly liquidation.

The run quickly spread to other prime MMFs, which held sizable amounts of financial sector debt that investors feared might decline rapidly in value. During the week of September 15, 2008, investors withdrew approximately $310 billion (15 percent of assets) from prime MMFs, with the heaviest redemptions coming from institutional funds. To meet these redemption requests, MMFs depleted their cash positions and sought to sell portfolio securities into already illiquid markets. These efforts caused further declines in the prices of short-term instruments and put pressure on per-share values of fund portfolios, threatening MMFs' stable NAVs. Nonetheless, only one MMF—the Reserve Primary Fund—broke the buck, because many MMF sponsors provided substantial financial support to prevent capital losses in their funds.

Fearing further redemptions, many MMF advisers limited new portfolio investments to cash, U.S. Treasury securities, and overnight instruments, and avoided term commercial paper, certificates of deposit, and other short-term credit instruments. During September 2008, MMFs reduced their holdings of commercial paper by about $170 billion (25 percent). As market participants hoarded cash and refused to lend to one another on more than an overnight basis, interest rates spiked and short-term credit markets froze. Commercial paper issuers were required to make significant draws on their backup lines of credit, placing additional pressure on the balance sheets of commercial banks.

On September 19, 2008, Treasury and the Board of Governors of the Federal Reserve System (Federal Reserve) announced two unprecedented market interventions to stabilize MMFs and to provide liquidity to short-term funding markets. Treasury's Temporary Guarantee Program for Money Market Funds temporarily provided guarantees for shareholders in MMFs that elected to participate in the program.[14] The Federal Reserve's Asset-Backed Commercial Paper Money Market Mutual Fund Liquidity Facility (AMLF) extended credit to U.S. banks and bank holding companies to finance their purchases of high-quality ABCP from MMFs.[15]

The announcements of these government programs substantially slowed the run on prime MMFs. Outflows from prime MMFs diminished to about $65 billion in the week after the announcements and, by mid-October, these MMFs began attracting net inflows. Moreover, in the weeks following the government interventions, markets for commercial paper and other short-term debt instruments stabilized considerably.[16]

2. The SEC's Changes to the Regulation of MMFs

The effects of the financial turmoil in 2007 and 2008 on MMFs—and, in particular, the run on these funds in September 2008 and its consequences—have highlighted the need for reforms to mitigate the systemic risks posed by MMFs. Appropriate reforms include changes to MMF regulations as well as broader policy actions. This section first examines rule changes that have been adopted by the SEC to improve the safety and resilience of MMFs and then discusses some limitations in these measures' mitigation of systemic risk and the need for further reforms.

Notwithstanding the need for reform, the significance of MMFs in the U.S. financial system suggests that changes must be considered carefully. Tighter restrictions on MMFs might, for example, lead to a reduction in the supply of short-term credit, a shift in assets to substitute investment vehicles that are subject to less regulation than MMFs, and significant impairment of an important cash-management tool for investors. Moreover, the economic importance of risk-taking by MMFs—as lenders in private debt markets and as investments that appeal to shareholders' preferences for risk and return—suggests that the appropriate objective for reform should not be to eliminate all risks posed by MMFs. Attempting to prevent any fund from ever breaking the buck would be an impractical goal that might lead, for example, to draconian and—from a broad economic perspective—counterproductive measures, such as outright prohibitions on purchases of private debt instruments and securities with maturities of more than one day. Instead, policymakers should balance the benefits of allowing individual MMFs to take some risks and facilitating private and public borrowers' access to term financing in money markets with the broader objective of mitigating systemic risks—in particular, the risk that one fund's problems may cause serious harm to other MMFs, their shareholders, short-term funding markets, the financial system, and the economy.

a. SEC Regulatory Changes

In January 2010, the SEC adopted new rules regulating MMFs in order to make these funds more resilient to market

[14] MMFs that elected to participate in the program paid fees of 4 to 6 basis points at an annual rate for the guarantee. The Temporary Guarantee Program for Money Market Funds expired on September 18, 2009.

[15] The AMLF expired on February 1, 2010.

[16] Several other unprecedented government interventions that provided additional support for the MMF industry and for short-term funding markets were introduced after the run on MMFs had largely abated. For example, the Federal Reserve in October 2008 established the Commercial Paper Funding Facility (CPFF), which provided loans for purchases (through a special purpose vehicle) of term commercial paper from issuers. The CPFF, which expired on February 1, 2010, helped issuers repay investors—such as MMFs—who held maturing paper. Also in October 2008, the Federal Reserve announced the Money Market Investor Funding Facility (MMIFF), which was intended to bolster liquidity for MMFs by financing (through special purpose vehicles) purchases of securities from the funds. The MMIFF was never used and expired on October 30, 2009. In November 2008, Treasury agreed to become a buyer of last resort for certain securities held by the Reserve U.S. Government Fund (a MMF), in order to facilitate an orderly and timely liquidation of the fund. Under the agreement, Treasury would purchase certain securities issued by government sponsored enterprises at amortized cost (not mark to market), and $3.6 billion of such purchases were completed in January 2009.

disruptions and thus less likely to break the buck. The new rules also might help reduce the likelihood of runs on MMFs by facilitating the orderly liquidation of funds that have broken the buck. The SEC designed the new rules primarily to meet its statutory obligations under the ICA to protect investors and promote capital formation. Nonetheless, the rules should mitigate (although not eliminate) systemic risks by reducing the susceptibility of MMFs to runs, both by lessening the likelihood that an individual fund will break the buck and by containing the damage should one break the buck. The rule changes fall into three principal categories.

(i) *Enhanced Risk-Limiting Constraints on Money Market Fund Portfolios.* Each of the changes that follow further constrains risk-taking by MMFs.

Liquidity Risk. One of the most important SEC rule changes aimed at reducing systemic risk associated with MMFs is a requirement that each fund maintain a substantial liquidity cushion. Augmented liquidity should position MMFs to better withstand heavy redemptions without selling portfolio securities into potentially distressed markets at discounted prices. Forced "fire sales" to meet heavy redemptions may cause losses not only for the fund that must sell the securities, but also for other MMFs that hold the same or similar securities. Thus, a substantial liquidity cushion should help reduce the risk that strains on one MMF will be transmitted to other funds and to short-term credit markets.

Specifically, the SEC's new rules require that MMFs maintain minimum daily and weekly liquidity positions. Daily liquidity, which must be at least 10 percent of a MMF's assets, includes cash, U.S. Treasury obligations, and securities (including repurchase agreements) that mature or for which the fund has a contractual right to obtain cash within a day. Weekly liquidity, which must be at least 30 percent of each MMF's assets, includes cash, securities that mature or can be converted to cash within a week, U.S. Treasury obligations, and securities issued by federal government agencies and government-sponsored enterprises with remaining maturities of 60 days or less.[17] Furthermore, the new rules require MMF advisers to maintain larger liquidity buffers as necessary to meet reasonably foreseeable redemptions.

Credit Risk. The new rules reduce MMFs' maximum allowable holdings of "second-tier" securities, which carry more credit risk than first-tier securities, to no more than 3 percent of each fund's assets.[18] In addition, a MMF's exposure to a single second-tier issuer is now limited to one-half of 1 percent of the fund's assets, and funds can only purchase second-tier securities with maturities of 45 days or less. These new constraints reduce the likelihood that individual funds will be exposed to a credit event that could cause the funds to break the buck. Also, since second-tier securities often trade in thinner markets, these changes should improve the ability of individual MMFs to maintain a stable NAV during periods of market volatility.

Interest Rate Risk. By reducing the maximum allowable weighted average maturity (WAM) of fund portfolios from 90 days to 60 days, the new rules are intended to diminish funds' exposure to interest rate risk and increase the liquidity of fund portfolios. The SEC also introduced a new weighted average life (WAL) measure for MMFs—and set a ceiling for WAL at 120 days—in order to lower funds' exposure to interest-rate, credit, and liquidity risks associated with the floating-rate obligations that MMFs commonly hold.[19]

Stress Testing. Finally, the SEC's new rules require fund advisers to periodically stress test their funds' ability to maintain a stable NAV per share based on certain hypothetical events, including a change in short-term interest rates, an increase in shareholder redemptions, a downgrade or default of a portfolio security, and a change in interest rate spreads. Regular and methodical monitoring of these risks and their potential effects should help funds weather stress without incident.

(ii) *Facilitating Orderly Fund Liquidations.* The new SEC rules should reduce the systemic risk posed by MMFs by permitting a fund that is breaking the buck to promptly suspend redemptions and liquidate its portfolio in an orderly manner. This new rule should help prevent a capital loss at one fund from forcing a disorderly sale of portfolio securities that might disrupt short-term markets and diminish share values of other MMFs. Moreover, the ability of a fund to suspend redemptions should help prevent investors who redeem shares from benefiting at the expense of those who remain invested in a fund.

(iii) *Repurchase Agreements.* The SEC's new rules place more stringent constraints on repurchase agreements that are collateralized with private debt instruments rather than cash equivalents or government securities. MMFs are among the largest purchasers of repurchase agreements, which they use to invest cash, typically on an overnight basis. Because the collateral usually consists of long-term debt securities, a MMF cannot hold the securities underlying this collateral without violating SEC rules that limit MMF holdings to short-term obligations. Accordingly, if a significant counterparty fails to repurchase securities as stipulated in a repurchase agreement, its MMF counterparties can be expected to direct custodians to sell the collateral immediately, and sales of private debt instruments could be sizable and disruptive to financial markets. To address this risk, the SEC's new rule places additional constraints on MMFs' exposure to counterparties through repurchase agreement transactions that are collateralized by securities other than cash equivalents or government securities.

b. Need for Further Reform To Reduce Susceptibility to Runs

The new SEC rules make MMFs more resilient and less risky and therefore reduce the likelihood of runs on funds, increase the size of runs that they could withstand, and mitigate the systemic risks they pose. However, more can be done to address the structural vulnerabilities of MMFs to runs. Indeed, the Chairman of the SEC characterized its new rules as "a first step" in strengthening MMFs and noted that a number of additional possible reforms (many of which are presented in section 3 of this report) are under discussion. Likewise, Treasury's Financial Regulatory Reform: A New Foundation (2009) anticipated that measures taken by the SEC "should not, by themselves, be expected to prevent a run on MMFs of the scale experienced in September 2008."

[17] Tax-exempt money market funds are exempt from daily minimum liquidity requirements but not the weekly minimum liquidity requirements, because most tax-exempt fund portfolios consist of longer-term floating- and variable-rate securities with seven-day "put" options that effectively give the funds weekly liquidity. Tax-exempt funds are unlikely to have investment alternatives that would permit them to meet a daily liquidity requirement.

[18] Under SEC rule 2a–7, for short-term debt securities to qualify as second-tier securities, they generally must have received the second highest short-term debt rating from the credit rating agencies or be of comparable quality. Section 939A of the Dodd-Frank Act requires that government agencies remove references to credit ratings in their rules and replace them with other credit standards that the agency determines appropriate. As a result, the SEC will be reconsidering this rule and its provisions relating to second-tier securities to comply with this statutory mandate.

[19] For purposes of computing WAM, a floating-rate security's "maturity" can be its next interest-rate reset date. In computing WAL, the life of a security is determined solely by its final maturity date. Hence, WAL should be more useful than WAM in reflecting the risks of widening spreads on longer-term floating-rate securities.

Of the five features that make MMFs vulnerable to runs (see section 1(b)), the two most directly addressed in the new SEC rules are liquidity risks associated with maturity transformation and MMF portfolios' exposures to credit and interest-rate risks. The SEC's new rules should substantially reduce these risks, but systemic risks arising from the other features of MMFs and their investors—the stable, rounded NAV, a system of discretionary sponsor support, and a highly risk-averse investor base—still remain, as do many of the amplifying interaction effects. Some mitigation of the destabilizing effects that one or a few MMFs can impose on the rest of the industry through contagion might be achievable through further modifications to rule 2a–7 and other SEC rules. Importantly, however, other reforms that could more substantially reduce the risk of contagion and that, as such, merit further consideration, would require action beyond what the SEC could achieve under its current authority.

Mitigating the risk of runs before another liquidity crisis materializes is especially important because the events of September 2008 may have induced expectations of government assistance at minimal cost in case of severe financial strains. Market participants know, and recent events have confirmed, that when runs on MMFs occur, the government will face substantial pressure to intervene in some manner to minimize the propagation of financial strains to short-term funding markets and to the real economy. Importantly, such interventions would be intended not only to reduce harm to MMF investors but also to prevent disruptions of markets for commercial paper and other short-term financing instruments, which are critical for the functioning of the economy. Therefore, if further measures to insulate the industry from systemic risk are not taken before the next liquidity crisis, market participants will likely expect that the government would provide emergency support at minimal cost for MMFs during the next crisis. Such market expectations of (hypothetical) future non-priced or subsidized government support would distort incentives for MMFs and prices in short-term funding markets and would potentially increase the systemic risk posed by MMFs. To forestall these perverse effects, it is thus imperative that MMFs be required to internalize fully the costs of liquidity or other risks associated with their operation.

MMF regulatory reform in light of the run on MMFs in September and October 2008. The run on MMFs in 2008 provides some important lessons for evaluating potential reforms for mitigating systemic risk. For example, the triggering events of the run and the magnitude of the outflows that followed underscore the difficulty of designing reforms that might prevent runs and the associated damage to the financial system.

Making each individual MMF robust enough to survive a crisis of the size of that experienced in 2008 may not be an appropriate policy objective because it would unduly limit risk taking. Indeed, although the SEC's tightening of restrictions on the liquidity, interest-rate, and credit risks borne by individual MMFs will be helpful in making MMFs more resilient to future strains, there are practical limits to the degree of systemic risk mitigation that can be achieved through further restrictions of this type. For example, an objective of preventing any MMF from breaking the buck probably would not be feasible for funds that invest in private debt markets. Changes that would prevent funds from breaking the buck due to a single Lehman Brothers-like exposure would have to be severe: Only limiting funds' exposures to each issuer to less than one-half of 1 percent of assets would prevent a precipitous drop in the value of any single issuer's debt from causing a MMF to break the buck.[20] But even such a limit on exposure to a single issuer would not address the risk that MMFs may accumulate exposures to distinct but highly correlated issuers, and that funds would remain vulnerable to events that cause the debt of multiple issuers to lose value.

Beyond diversification limits, new rules to protect MMFs from material credit losses would be difficult to craft unless regulators take the extreme step of eliminating funds' ability to hold any risky assets. But that approach would be clearly undesirable, as it would adversely affect many firms that obtain short-term financing through commercial paper and similar instruments. In addition, such an extreme approach would deny many retail investors any opportunity to obtain exposure to private money market instruments and most likely would motivate some institutional investors to shift assets from MMFs to less regulated vehicles.

Similarly, liquidity requirements sufficient to cover all redemption scenarios for MMFs probably would be impractical and inefficient. The SEC's new liquidity requirements help mitigate liquidity risks borne by the funds, and if MMFs had held enough liquid assets in September 2008 to meet the new liquidity requirements, each MMF would have had adequate daily liquidity to meet redemption requests on most individual days during the run. Even so, the cumulative effect of severe outflows on *consecutive* days would have exceeded many funds' liquidity buffers. Moreover, without external support in 2008—specifically, the introduction of the Treasury's Temporary Guarantee Program for Money Market Funds and the Federal Reserve's AMLF—outflows likely would have continued and been much larger, and they would have forced substantial sales of assets to meet redemptions. Such asset sales would have contributed to severe strains in short-term markets, depressed asset prices, caused capital losses for MMFs, and prompted further shareholder flight. Hence, MMFs' experience during the run in 2008 indicates that the new SEC liquidity requirements make individual MMFs more resilient to shocks but still leave them susceptible to runs of substantial scale.

Raising the liquidity requirements enough so that each MMF would hold adequate daily liquidity to withstand a large-scale run would be a severe constraint and would fail to take advantage of risk-pooling opportunities that might be exploited by external sources of liquidity. During the run in 2008, individual MMFs experienced large variations in the timing and magnitude of their redemptions. Liquidity requirements stringent enough to ensure that every individual MMF could have met redemptions without selling assets would have left most of the industry with far too much liquidity, even during the run, and would have created additional liquidity risks for issuers of short-term securities, since these issuers would have had to roll over paper more frequently. Some of the approaches discussed in section 3 are aimed at buttressing the SEC's new minimum liquidity requirements without simply increasing their magnitude.

Finally, the run on MMFs in 2008 demonstrated the systemic threat that such runs may represent. Without additional reforms to more fully mitigate the risk of a run spreading among MMFs, the actions to support the MMF industry that the U.S. government took beginning in 2008 may create an expectation for similar government support during future financial crises, and the resulting moral hazard may make crises in the MMF industry more

[20] At the time of its bankruptcy, Lehman Brothers' short-term debt was still a first-tier security, so MMFs were able to hold up to 5 percent of their assets in Lehman Brothers' debt. The SEC's new rules do not affect this limit.

frequent than the historical record would suggest. Accordingly, despite the risk reduction that should be achieved by the initial set of new SEC rules, policymakers should explore the advantages and disadvantages of implementing further reforms before another crisis materializes.

3. Policy Options for Further Reducing the Risks of Runs on MMFs

This section discusses a range of options for further mitigation of the systemic risks posed by MMFs. The SEC requested comment on some of these options, such as requiring that MMFs maintain a floating NAV or requiring in kind redemptions in certain circumstances. In addition, the SEC received comments proposing a two-tier system of MMFs in which some funds maintain a stable NAV and others a floating NAV. Other options discussed in this section go beyond what the SEC could implement under existing authorities and would require legislation or coordinated action by multiple government agencies and the MMF industry. While the measures presented here, either individually or in combination, would help diminish systemic risk, new restrictions imposed solely on MMFs may reduce their appeal to some investors and might cause some—primarily institutional—investors to move assets to less regulated cash management substitutes. Many such funds, like MMFs, seek to maintain a stable NAV and have other features that make them vulnerable to runs, so such funds likely also would pose systemic risks. Therefore, effective mitigation of MMFs' susceptibility to runs may require policy reforms beyond those directed at registered MMFs to address risks posed by funds that compete with MMFs. Such reforms, which generally would require legislation, are discussed in section 3(h).

a. Floating Net Asset Values

Historically, the $1 stable NAV that MMFs maintain under rule 2a–7 has been a key element of their appeal to a broad range of investors, and the stable NAV has contributed to a dramatic expansion in MMFs' assets over the past two decades. At the same time, as noted in section 1(b), the stable, rounded NAV is one of the features that heighten the vulnerability of MMFs to runs. The significance of MMFs in financial markets and the central role of the stable, rounded NAV in making MMFs appealing to investors and, at the same time, vulnerable to runs, make careful discussion of the potential benefits and risks of moving MMFs away from a stable NAV essential to a discussion of MMF reform.

The stable, rounded NAVs of MMFs contribute to their vulnerability to runs for several reasons.

• First, the stable, rounded NAV, coupled with MMF sponsors' longstanding practice of supporting the stable NAV when funds have encountered difficulties, has fostered investors' expectations that MMF shares are risk-free cash equivalents. When the Reserve Primary Fund failed to maintain those expectations in September 2008, the sudden loss of investor confidence helped precipitate a generalized run on MMFs. By making gains and losses a regular occurrence, as they are in other mutual funds, a floating NAV could alter investor expectations and make clear that MMFs are not risk-free vehicles. Thus, investors might become more accustomed to and tolerant of NAV fluctuations and less prone to sudden, destabilizing reactions in the face of even modest losses. However, the substantial changes in investor expectations that could result from a floating NAV also might motivate investors to shift assets away from MMFs to banks or to unregulated cash-management vehicles, and the effects of potentially large movements of assets on the financial system should be considered carefully. These issues are discussed in more detail later.

• Second, a rounded NAV may accelerate runs by amplifying investors' incentives to redeem shares quickly if a fund is at risk of a capital loss. When a MMF experiences a loss of less than one-half of 1 percent and continues to redeem shares at a rounded NAV of $1, it offers redeeming shareholders an arbitrage opportunity by paying more for the shares than the shares are worth. Simultaneously, the fund drives down the expected future value of the shares because redemptions at $1 per share further erode the fund's market-based per-share value—and increase the likelihood that the fund will break the buck—as losses on portfolio assets are spread over a shrinking asset base. These dynamics are inherently unstable. Thus, even an investor who otherwise might not choose to redeem may do so in recognition of other shareholders' incentives to redeem and the effects of such redemptions on a fund's expected NAV. The growth of institutional investment in MMFs has exacerbated this instability because institutional investors are better positioned than retail investors to identify potential problems in a MMF's portfolio and rapidly withdraw significant amounts of assets from the fund.

In contrast, a floating NAV eliminates some of the incentives to redeem when a MMF has experienced a loss. Because MMFs must redeem shares at NAVs set after redemption requests are received, losses incurred by a fund with a floating NAV are borne on a pro rata basis by all shareholders, whether they redeem or not. Redemptions from such a fund do not concentrate already incurred losses over a smaller asset base and do not create clear arbitrage opportunities for investors. However, as discussed below, a floating NAV does not eliminate the incentive to redeem shares from a distressed MMF.

• Third, the SEC rules that permit funds to maintain a stable, rounded NAV also force an abrupt decrease in price once the difference between a fund's market-based shadow NAV and its $1 stable NAV exceeds one-half of 1 percent. So, although NAV fluctuations are rare in MMFs, when prices do decline, the change appears as a sudden drop. This discontinuity heightens investors' incentives to redeem shares before a loss is incurred, produces dire headlines, and probably raises the chance of a panic.

These considerations suggest that moving to a floating NAV would reduce the systemic risk posed by MMFs to some extent. Under a required floating NAV, MMFs would have to value their portfolio assets just like any other mutual fund. That is, MMFs would not be able to round their NAVs to $1 or use the accounting methods (for example, amortized cost for portfolio securities with a maturity of greater than 60 days) currently allowed under rule 2a–7.

To be sure, a floating NAV itself would not eliminate entirely MMFs' susceptibility to runs. Rational investors still would have an incentive to redeem as fast as possible the shares of any MMF that is at risk of depleting its liquidity buffer before that buffer is exhausted, because subsequent redemptions may force the fund to dispose of less-liquid assets and incur losses. However, investors would have less of an incentive to run from MMFs with floating NAVs than from those with stable, rounded NAVs.

Notwithstanding the advantages of a floating NAV, elimination of the stable NAV for MMFs would be a dramatic change for a nearly $3 trillion asset-management sector that has been built around the stable $1 share price. Indeed, a switch to floating NAVs for MMFs raises several concerns.

• First, such a change might reduce investor demand for MMFs and thus diminish their capacity to supply credit to businesses, financial institutions, state and local governments, and other

borrowers who obtain financing in short-term debt markets. MMFs are the dominant providers of some types of credit, such as commercial paper and short-term municipal debt, so a significant contraction of MMFs might cause particular difficulties for borrowers who rely on these instruments for financing. If the contraction were abrupt, redemptions might cause severe disruptions for MMFs, the markets for the instruments the funds hold, and borrowers who tap those markets. While there is no direct evidence on the likely effect of a floating NAV on the demand for MMFs, the risk of a substantial shift of assets away from MMFs and into other vehicles should be weighed carefully. Assets under management in MMFs dwarf those of their nearest substitutes, such as, for example, ultra-short bond funds, most likely because ultra-short bond funds are not viewed as cash substitutes. To the extent that demand for stable NAV funds is boosted by investors who hold MMFs because they perceive them to be risk-free, a reduction in demand for these funds might be desirable.[21] However, some investors face functional obstacles to placing certain assets in floating NAV funds. For example, internal investment guidelines may prevent corporate cash managers from investing in floating NAV funds, some state laws allow municipalities to invest only in stable-value funds, and fiduciary obligations may prevent institutional investors from investing client money in floating NAV funds. In addition, some investors may not tolerate the loss of accounting convenience and tax efficiencies that would result from a shift to a floating NAV, although these problems might be mitigated somewhat through regulatory or legislative actions.[22]

• Second, a related concern is that elimination of MMFs' stable NAVs may cause investors to shift assets to stable NAV substitutes that are vulnerable to runs but subject to less regulation than MMFs. In particular, many institutional investors might move assets to less regulated or unregulated cash management vehicles, such as offshore MMFs, enhanced cash funds, and other stable value vehicles that hold portfolios similar to those of MMFs but are not subject to the ICA's restrictions on MMFs. These unregistered funds can take on more risks than MMFs, but such risks are not necessarily transparent to investors. Accordingly, unregistered funds may pose even greater systemic risks than MMFs, particularly if new restrictions on MMFs prompt substantial growth in unregistered funds. Thus, changes to MMF rules might displace or even increase systemic risks, rather than mitigate them, and make such risks more difficult to monitor and control. Reforms designed to reduce risks in less regulated or unregulated MMF substitutes are discussed in more detail in section 3(h).

Elimination of MMFs' stable NAVs may also prompt some investors—particularly retail investors—to shift assets from MMFs to banks. Such asset shifts would have potential benefits and drawbacks, which are discussed in some detail in section 3(g).

• Third, MMFs' transition from stable to floating NAVs might itself be systemically risky. For example, if shareholders perceive a risk that a fund that is maintaining a $1 NAV under current rules has a market-based shadow NAV of less than $1, these investors may redeem shares preemptively to avoid potential losses when MMFs switch to floating NAVs. Shareholders who cannot tolerate floating NAVs probably also would redeem in advance. If large enough, redemptions could force some funds to sell assets and make concerns about losses self-fulfilling. Hence, successful implementation of a switch to floating NAVs would depend on careful design of the conversion process to guard against destabilizing transition dynamics.

• Fourth, risk management practices in a floating NAV MMF industry might deteriorate without the discipline required to maintain a $1 share price. MMFs comply with rule 2a–7 because doing so gives them the ability to use amortized-cost accounting to maintain a stable NAV. Without this reward, the incentive to follow 2a–7 restrictions is less clear. Moreover, the stable, rounded NAV creates a bright line for fund advisers: Losses in excess of ½ of 1 percent would be catastrophic because they would cause a fund to break the buck. With a floating NAV, funds would not have as clear a tipping point, so fund advisers might face reduced incentives for prudent risk management.

• The fifth and final concern is that a floating NAV that accomplishes its proponents' objectives of reducing systemic risks may be difficult to implement. Under normal market conditions, even a floating NAV would likely move very little because of the nature of MMF assets. For example, although a requirement that MMFs move to a $10 NAV and round to the nearest cent would force funds to reprice shares for as little as a 5 basis point change in portfolio value, NAV fluctuations might still remain relatively rare. Enhanced precision for NAVs (for example, NAVs with five significant figures) could bring more regular, incremental fluctuations, but precise pricing of many money market securities is challenging given the absence of active secondary markets. In addition, if fund sponsors decided to provide support to offset any small deviations from the usual NAV, deviations from that NAV might remain rare.

Thus, a floating NAV may not substantially improve investors' understanding of the riskiness of MMFs or reduce the stigma and systemic risks associated with breaking the buck. Investors' perceptions that MMFs are virtually riskless may change slowly and unpredictably if NAV fluctuations remain small and rare. MMFs with floating NAVs, at least temporarily, might even be more prone to runs if investors who continue to see shares as essentially risk-free react to small or temporary changes in the value of their shares.

To summarize, requiring the entire MMF industry to move to a floating NAV would have some potential benefits, but those benefits would have to be weighed carefully against the risks that such a change would entail.

b. Private Emergency Liquidity Facilities for MMFs

As discussed in section 1(b), the liquidity risk of MMFs contributes importantly to MMFs' vulnerability to runs. The programs introduced at the height of the run on MMFs in September 2008—Treasury's Temporary Guarantee Program for Money Market Funds and the liquidity backstop provided by the AMLF—were effective in stopping the run on MMFs.[23] More generally, policymakers have long recognized the utility of liquidity

[21] Even a contraction in the credit extended by MMFs might be an efficient outcome if such credit has been over-supplied because markets have not priced liquidity and systemic risks appropriately.

[22] A stable NAV relieves shareholders of the administrative task of tracking the timing and price of purchase and sale transactions for tax and accounting purposes. For investors using MMFs for cash management, floating NAV funds (under current rules) would present more record-keeping requirements than stable NAV funds, although certain tax changes beginning in 2011 will require mutual funds, including MMFs, to report the tax basis (presumably using an average basis method) to shareholders and thereby help reduce any associated accounting burden from a floating NAV.

[23] Outflows from prime MMFs totaled about $200 billion in the two days prior to the Treasury and Federal Reserve announcements on Friday, September 19, 2008. However, in the two business days following the announcements (Monday and Tuesday, September 22 and 23), outflows were just $22 billion.

backstops for institutions engaged in maturity transformation: Banks, for example, have had access to the discount window since its inception, and backstop lending facilities also have been created more recently for other types of institutions. Thus, enhanced liquidity protection should be considered as part of any regulatory reform effort aimed at preventing runs on MMFs. At the same time, such enhanced liquidity protection does not have to be provided necessarily by the government: A private facility, adequately capitalized and financed by the MMF industry, could be set up to supply liquidity to funds that most need it at times of market stress. Depending on its structure, such a private facility itself might have access to broader liquidity backstops.

A private emergency liquidity facility could be beneficial on several levels. First, a private liquidity facility, in combination with the SEC's new liquidity requirements, might substantially buttress MMFs' ability to withstand outflows without selling assets in potentially illiquid markets.[24] Second, a private emergency facility might offer important efficiency gains from risk pooling. Even during the systemic liquidity crisis in 2008, individual MMFs experienced large variations in the timing and magnitude of redemptions. An emergency facility could provide liquidity to the MMFs that need it; in contrast, liquidity requirements for individual MMFs would likely leave some funds with too much liquidity and others with too little. Third, a private liquidity facility might provide funds with flexibility in managing liquidity risks if, for example, regulators allowed MMFs some relief in liquidity requirements in return for the funds' purchase of greater access to the liquidity facility's capacity.

Importantly, a properly designed and well-managed private liquidity facility would internalize the cost of liquidity protection for the MMF industry and provide appropriate incentives for MMFs and their investors.[25] Such a facility would not help funds that take on excessive capital risks or face runs because of isolated credit losses (a well-designed private liquidity facility would not have helped the Reserve Primary Fund or its shareholders avoid losses in September 2008 due to holdings of Lehman Brothers debt). Moreover, a liquidity facility alone may not prevent runs on MMFs triggered by concerns about more widespread credit losses at MMFs. However, a liquidity facility could substantially reduce the damage that a run on a single distressed fund might cause to the rest of the industry.

While a private emergency liquidity facility would be appealing in several respects, setting up an effective facility would present a number of challenges. The structure and operations of a private liquidity facility would have to be considered carefully to ensure that it would be effective during crises and that it would not unduly distort incentives, while, at the same time, that it would be in compliance with all applicable regulations and that it would not favor certain market participants or business models. For example:

- On the one hand, if MMFs were required to participate in a private facility, regulators would assume some responsibility for ensuring that the facility was operated equitably and efficiently, that it managed risks prudently, and that it was able to provide liquidity effectively during a crisis. On the other hand, if participation were voluntary, some MMFs would likely choose not to participate to avoid sharing in the costs associated with the facility. Non-participating MMFs might present greater risks than their competitors but would free-ride on the stability the liquidity facility would provide. In a voluntary participation framework, one means of balancing risks between MMFs that do and do not participate in a liquidity facility would be to require nonparticipants to adhere to more stringent risk-limiting constraints or to require such funds to switch to a floating NAV. Such an approach (in which some MMFs have stable NAVs and others floating NAVs) is considered in section 3(e).
- Ensuring that the facility has adequate capacity to meet MMFs' liquidity needs during a crisis would be critical to the effectiveness of the facility in mitigating systemic risk. Inadequate capacity might, for example, create an incentive for MMF advisers to tap the facility before others do and thus make the facility itself vulnerable to runs. News of a depleted liquidity facility might amplify investor concerns and trigger or expand a run on MMFs. However, raising enough capital to build adequate liquidity capacity without undue leverage would be a challenge for the asset management industry. Accordingly, meaningful mitigation of systemic risk may require that the facility itself have access to alternative sources of liquidity.
- A private facility may face conflicts of interest during a crisis when liquidity is in short supply. Responsibility to the facility's shareholders would mandate prudence in providing liquidity to MMFs. For example, facility managers would want to be selective in providing liquidity against term commercial paper out of concern about losses on such paper. However, excessive prudence would be at odds with the facility serving as an effective liquidity backstop. In addition, a private facility may face conflicts among different types of shareholders and participants who may have different interests, and a strong governance structure would be needed to address these conflicts as well as prevent the domination of the facility by the advisers of larger funds.
- Rules governing access to the facility would have to be crafted carefully to minimize the moral hazard problems among fund advisers, who could face diminished incentives to maintain liquidity in their MMFs. However, excessive constraints on access would limit the facility's effectiveness. An appropriate balancing of access rules might be difficult to achieve.

Notwithstanding these concerns, a private emergency liquidity facility could play an important role in supplementing the SEC's new liquidity requirements for MMFs. The potential advantages and disadvantages of such a facility, as well as its optimal structure and modes of operation, should be the subjects of further analysis and discussion.

c. Mandatory Redemptions in Kind

When investors make large redemptions from MMFs, they impose liquidity costs on other shareholders in the fund. For example, redemptions may force a fund to sell its most liquid assets to raise cash. Remaining shareholders are left with claims on a less liquid portfolio, so redemptions are particularly costly for other

[24] For example, as noted in the text, even if MMFs in September 2008 had held liquid assets in the proportions that the SEC has recently mandated, the net redemptions experienced by the funds following the Lehman Brothers bankruptcy would have forced MMFs to sell considerable amounts of securities into illiquid markets in the absence of the substantial government interventions. But a liquidity facility with the capacity to provide an additional 10 percent overnight liquidity to each fund would double the effective overnight liquid resources available to MMFs. If MMFs in September 2008 had already been in compliance with the new liquidity requirements, a facility with this capacity would have considerably reduced funds' need to raise liquidity (for example, through asset sales) during the run. In addition, the very existence of the facility might have reduced redemption requests in the first place.

[25] A private liquidity facility could also result in retail fund investors bearing some of the costs of meeting the likely higher liquidity needs of institutional funds. Consideration should be given as to whether and how to prevent such an outcome.

shareholders during a crisis, when liquidity is most valued.[26]

A requirement that MMFs distribute large redemptions by institutional investors in kind, rather than in cash, would force these redeeming shareholders to bear their own liquidity costs and reduce their incentive to redeem.[27] If liquidity pressures are causing money market instruments to trade at discounts, a MMF that distributes a large redemption in cash may have to sell securities at a discount to raise the cash. All shareholders in the fund would share in the loss on a pro rata basis. However, if the fund distributes securities to the investor in proportion to the claim on the fund represented by the redeemed shares, the liquidity risk would be borne most directly by the redeeming investor. If the fund elects to dispose of the securities in a dislocated market and incurs a loss, other shareholders are not directly affected.[28]

Requiring large redemptions to be made in kind would reduce, but not eliminate the systemic risk associated with large, widespread redemptions. Shareholders with immediate liquidity needs who receive securities from MMFs would have to sell those assets, and the consequences for short-term markets of such sales would be similar to the effects if the money market fund itself had sold the securities. Smaller shareholders would still receive cash redemptions, and larger investors might structure their MMF investments and redemptions to remain under the in-kind threshold.

An in-kind redemption requirement would present some operational and policy challenges. Portfolio holdings of MMFs sometimes are not freely transferable or are only transferable in large blocks of shares, so delivery of an exact pro rata portion of each portfolio holding to a redeeming shareholder may be impracticable. Thus, a fund may have to deliver different securities to different investors but would need to do so in an equitable manner. Funds should not, for example, be able to distribute only their most liquid assets to redeeming shareholders, since doing so would undermine the purpose of an in-kind redemptions requirement. Thus, the SEC would have to make key judgments on the circumstances under which a fund must redeem in kind, as well as the criteria that funds would use for determining which portfolio securities must be distributed and how they would be valued.

d. Insurance for MMFs

As noted in section 1(b), the absence of formal capital buffers or insurance for MMFs, as well as their historical reliance on discretionary sponsor support in place of such mechanisms, further contributes to their vulnerability to runs. Treasury's Temporary Guarantee Program for Money Market Funds, announced on September 19, 2008, was a key component of the government intervention that slowed the run on MMFs. The program provided guarantees for shares in MMFs as of the announcement date. These guarantees were somewhat akin to deposit insurance, which for many decades has played a central role in mitigating the risk of runs on banks.[29] Therefore, some form of insurance for MMF shareholders might be helpful in mitigating systemic risks posed by MMFs, although insurance also may create new risks by distorting incentives of fund advisers and shareholders.

Like an external liquidity facility, insurance would reduce the risk of runs on MMFs, but the consequences of insurance and a liquidity facility would otherwise be different. A liquidity facility would do little or nothing to help a fund that had already experienced a capital loss, but such a facility might be very helpful in mitigating the destabilizing effects that one fund's capital loss might impose on the rest of the industry. Insurance, in contrast, would substantially reduce or eliminate any losses borne by the shareholders of the MMF that experienced the capital loss and damp their incentives to redeem shares in that fund. Although either option might reduce the incentives for asset managers and shareholders to minimize risks, a liquidity facility without an insurance scheme would leave intact shareholders' incentive to monitor funds for the credit and interest rate risks that may trigger a run. However, in a crisis that triggers concerns about widespread credit losses, liquidity protection without some form of insurance may still leave MMFs vulnerable to runs.

In addition to these general considerations, the design and implementation of an insurance program for MMFs would require resolution of a number of difficult issues. For example:

- Insurance could, in principle, be provided by the private sector, the government, or a combination of the two, but all three options have potential drawbacks. Private insurers have had considerable difficulties in fairly pricing and successfully guaranteeing rare but high-cost financial events, as demonstrated, for example, by the recent difficulties experienced by financial guarantors. That no private market for insurance has developed is some evidence that such insurance for MMFs may be a challenging business model, particularly if funds are not required to obtain insurance.[30] Making insurance for MMFs mandatory could attract private insurance providers, but the pricing and scope of coverage that these providers could offer would need to be the subject of careful consideration. In any case, insurers would need to maintain capital and carry reinsurance as necessary to cover losses during extraordinary events. Public insurance would necessitate new government oversight and administration functions and, particularly in the absence of private insurance, would require a mechanism

[26] The problem is exacerbated by a rounded NAV, because a fund that has already incurred a capital loss but that continues to redeem each share at $1 also transfers capital losses from redeeming shareholders to those who remain in the fund.

[27] Such a requirement also would force redeeming shareholders to bear their share of any losses that a MMF has already incurred—even if the fund maintains a stable, rounded NAV and has not yet broken the buck—rather than concentrating those losses entirely in the MMF and thus on remaining MMF shareholders.

[28] If the investor sells securities at a loss, however, and the MMF also holds the same or similar securities, the fund may be forced to re-price the securities and lower its mark-to-market, shadow NAV. So, remaining investors in the fund may be affected indirectly by the redeeming investor, even if that investor receives redemptions in kind.

[29] All publicly offered stable NAV MMFs were eligible to participate in the program. If a MMF elected to participate, the program guaranteed that each shareholder in that MMF would receive the stable share price (typically $1) for each share held in the fund, up to the number of shares held as of the close of business on September 19, 2008. In the event that a participating MMF broke the buck, the fund was required to suspend redemptions and commence liquidation, and the fund was eligible to collect payment from Treasury to enable payment of the stable share price to each covered investor. Treasury neither received any claims for payment nor incurred any losses under the program.

[30] The degree of insurance coverage provided by Treasury's Temporary Guarantee Program for Money Market Funds was unprecedented. Private insurance with considerably narrower coverage has been available to MMFs in the past: ICI Mutual Insurance Company, an industry association captive insurer, offered very limited insurance to MMFs from 1999 to 2003. This insurance covered losses on MMF portfolio assets due to defaults and insolvencies but not losses due to events such as a security downgrade or a rise in interest rates. Coverage was limited to $50 million per fund, with a deductible of the first 10 to 40 basis points of any loss. Premiums ranged from 1 to 3 basis points. ICI Mutual reportedly discontinued offering the insurance in 2003 because coverage restrictions and other factors limited demand to the point that the insurance was not providing enough risk pooling to remain viable. Of course, MMFs continue to have access to other market-based mechanisms for transferring risks, such as credit default swaps, although holdings of such derivative securities by MMFs are tightly regulated by rule 2a–7.

for setting appropriate risk-based premiums (either pre- or post-event). A hybrid insurance scheme—for example, with MMFs or their sponsors retaining the first level of losses up to a threshold, private insurers or risk pools handling losses up to a certain higher threshold, and a government insurance program serving as a backstop (perhaps with post-event recoupment)—might offer some advantages, but it would be subject to the risks of private insurance and the challenges of public insurance.

• On the one hand, mandatory participation in an insurance system likely would be necessary to instill investor confidence in the MMF industry, to ensure an adequate pooling of risk, to prevent riskier funds from opting out yet free-riding on the stability afforded by insured funds, and to create a sufficient premium base. On the other hand, an insurance requirement would create new government responsibilities, and the regulatory and economic implications of such a requirement would have to be evaluated carefully.

• Insurance increases moral hazard and would shift incentives for prudent risk management by MMFs from fund advisers, who are better positioned to monitor risks, to public or private insurers. In addition, insurance removes investors' incentives to monitor risk management by fund advisers. Broadly speaking, insurance fundamentally changes the nature of MMF shares, from pooled pass-through investments in risky assets to insured products with relatively low yields and limited or no risk.

• Appropriate pricing would be critical to the success of a MMF insurance program, as pricing would affect the financial position of the guarantor, the incentives of MMF advisers, and the relative attractiveness of different types of MMFs and their competitors (for example, bank deposits). Insurance pricing that is not responsive to the riskiness of individual MMF portfolios, for example, would heighten moral hazard problems that undermine incentives for prudent MMF risk management. Underpriced insurance might cause disruptive outflows from bank deposits to MMFs and would be a subsidy for sponsors of and investors in MMFs. Still, insurance for MMFs might be easier to price fairly than deposit insurance for banks, as MMF portfolios are highly restricted, relatively homogeneous in comparison with bank portfolios, transparent, and priced on a daily basis.

• Limits on insurance coverage (perhaps similar to those for deposit insurance) would be needed to avoid giving MMFs an advantage over banks and to preserve incentives for large investors to monitor the risk management practices at MMFs. However, such limits would leave most institutional investors' shares only marginally covered by insurance and do little to reduce their incentive to run should MMF risks become salient.

e. A Two-Tier System of MMFs, With Enhanced Protections for Stable NAV MMFs

Reforms intended to reduce the systemic risks posed by MMFs might be particularly effective if they allow investors some flexibility in choosing the MMFs that best match their risk-return preferences. Policymakers might accommodate a range of preferences by allowing two types of MMFs to be regulated under rule 2a–7:

(i) *Stable NAV MMFs.* These funds would continue to maintain stable, rounded NAVs, but they would be subject to enhanced protections, which might include some combination of tighter regulation (such as higher liquidity standards) and required access to an external liquidity backstop. Other options to provide enhanced protection for stable NAV funds might include mandatory distribution of large redemptions in kind and insurance. (Policymakers may also consider limiting the risk arising from investors in stable NAV funds by restricting sales of such funds' shares to retail investors, as discussed in section 3(f).)

(ii) *Floating NAV funds.* Although these MMFs would still have to comply with many of the current restrictions of rule 2a–7, these restrictions might be somewhat less stringent than those for stable NAV funds. So, floating NAV funds could bear somewhat greater credit and liquidity risks than stable NAV funds, might not be required to obtain access to external sources of liquidity or insurance, and most likely would pay higher yields than their stable NAV counterparts. Regulatory relief—for example, allowing simplified tax treatment for small NAV changes in funds that adhere to rule 2a–7—might help preserve the attractiveness of such funds for many investors.

A two-tier system could mitigate the systemic risks that arise from a stable, rounded NAV, by requiring funds that maintain a stable NAV to have additional protections that directly address some of the features that contribute to their vulnerability to runs. At the same time, by preserving stable NAV funds, such a system would mitigate the risks of a wholesale shift to floating NAV funds. For example, a two-tier system would diminish the likelihood of a large-scale exodus from the MMF industry by investors who might find a floating NAV MMF unacceptable.

Floating NAV MMFs would face a lower risk of runs for the reasons outlined in section 3(a): Frequent changes in these funds' NAVs would help align investor perceptions and actual fund risks, and investors would have reduced incentives to redeem early in a crisis without a rounded NAV. In addition, investor sorting might ameliorate the risk of runs: Under such a two-tier system, investors who choose floating NAV funds presumably would be less risk-averse and more tolerant of NAV changes than the shareholders of stable NAV funds.

During a crisis, investors would likely shift at least some assets from riskier floating NAV MMFs to stable NAV MMFs, which would presumably be safer because of their enhanced protections. Such flows might be similar, in some respects, to the asset flows seen during the September 2008 crisis from prime MMFs to government MMFs, but a shift between tiers of prime funds could be less disruptive to short-term funding markets and the aggregate supply of credit to private firms than a flight from prime to government MMFs. Effective design of a two-tier system would have to incorporate measures to ensure that large-scale shifts of assets among MMFs in crises would not be disruptive.[31]

For a two-tier system to be effective and materially mitigate the risk of runs, investors would have to fully understand the difference between the two types of funds and their associated risks. Investors who do not make this distinction might flee indiscriminately from floating NAV and stable NAV funds alike; in this case, a two-tier system would not be effective in mitigating the risk of runs.

The relative ease or difficulty of implementing a two-tier system would depend on the nature of the stable NAV and floating NAV MMFs that comprise it. For example, if the stable NAV funds simply were required to satisfy more stringent SEC rules governing portfolio safety, creation of a two-tier system would be fairly straightforward. A requirement that stable NAV funds obtain access to an emergency liquidity facility would likely make stable NAV

[31] If stable NAV MMFs carried mandatory insurance, some limitations on insurance coverage (for example, stipulating that individual shares in such funds could be insured only after a given number of days) might reduce the magnitude of flows between different types of MMFs and reduce implicit subsidies for investors who purchase shares in stable NAV funds only during crises. However, such rules might diminish the value of insurance in preventing runs.

funds less prone to runs and would reduce the likelihood that investors flee indiscriminately from both types of funds in the event of severe market strains. However, this approach also would face the challenges associated with the creation of an effective liquidity facility (discussed in more detail in section 3(b)).

f. A Two-Tier System of MMFs, With Stable NAV MMFs Reserved for Retail Investors

Another approach to the two-tier system described in section 3(e) could distinguish stable NAV and floating NAV funds by investor type. Stable NAV MMFs could be made available only to retail investors, while institutional investors would be restricted to floating NAV funds.

This approach would bring enhanced protections to stable NAV MMFs by mitigating the risk arising from the behavior of their investors, because institutional investors have historically generated greater risks of runs for MMFs than retail investors. As noted previously, the run from MMFs in September 2008 was primarily a flight by institutional investors. More than 90 percent of the net outflows from prime MMFs in the week following the Lehman Brothers bankruptcy came from institutional funds, and institutional investors withdrew substantial sums from prime MMFs even before the Reserve Primary Fund broke the buck.

Moreover, evidence suggests that the additional risks posed by institutional investors during the run on MMFs in September 2008 were not unique to that episode. Relative to retail investors, institutional investors have greater resources to monitor MMF portfolios and risks and have larger amounts at stake, and are therefore quicker to redeem shares on concerns about MMF risks. Institutional MMFs typically have greater cash flow volatility than retail funds. Net flows to institutional MMFs have also exhibited patterns indicating that institutional investors regularly arbitrage small discrepancies between MMFs' shadow NAVs and their $1 share prices.[32] These observations suggest that many institutional investors are aware of such discrepancies—which are likely to widen during financial crises—and are able to exploit them.

A two-tier system based on investor type would protect the interests of retail investors by reducing the likelihood that a run might begin in institutional MMFs (as it did in September 2008) and spread to retail funds. Moreover, such a system would preserve the original purpose of MMFs, which was to provide retail investors with cost-effective access to diversified investments in money market instruments. Retail investors have few alternative opportunities to obtain such exposures. In contrast, institutional investors, which can meet minimum investment thresholds for direct investments in money market instruments, would be able to continue doing so.

One advantage of this alternative is that it could be accomplished by SEC rulemaking under existing authorities without establishing additional market structures. A prohibition on institutional investors' use of stable NAV MMFs would have some practical hurdles, however. Successful enforcement of the rule would require the SEC to define who would qualify as retail and institutional investors. In practice, such distinctions may be difficult, although not impossible, to make. For example, retail investors who own MMF shares because of their participation in defined contribution plans (such as 401(k) plans) may be invested in institutional MMFs through omnibus accounts that are overseen by institutional investors (plan administrators). Simple rules that might be used to identify institutional investors, such as defining as institutional any investor whose account size exceeds a certain threshold, would be imperfect and could motivate the use of workarounds (such as brokered accounts) by institutional investors. The SEC, as part of its rulemaking, would need to take steps to prevent such workarounds.

Because many institutional investors may be particularly unwilling to switch to floating NAV MMFs, a prohibition on sales of stable NAV MMFs shares to such investors may have many of the same unintended consequences as a requirement that all MMFs adopt floating NAVs (see section 3(a)). In particular, prohibiting institutional investors from holding stable NAV funds might cause large shifts in assets to unregulated MMF substitutes. This concern is of particular importance given that institutional MMFs currently account for almost two-thirds of the assets under management in MMFs.

In addition, a two-tier system based on investor type would preclude some of the advantages of allowing institutional investors to choose between stable NAV MMFs and floating NAV MMFs (as the option described in section 3(e) would permit). For example, under the two-tier system described in section 3(e), investor sorting would provide some protection for the floating NAV funds, because institutional investors holding floating NAV MMFs likely would be less risk-averse than those who held stable NAV funds. With institutional investors prohibited from holding shares in stable NAV MMFs, such sorting among these investors would not occur. During a crisis, under the system described in section 3(e), institutional investors might be expected to shift assets from floating NAV MMFs to stable NAV funds, but a ban on institutional holdings of stable NAV MMF shares would prevent such shifts.

g. Regulating Stable NAV MMFs as Special Purpose Banks

Functional similarities between MMF shares and deposits, as well as the risk of runs on both types of instruments, provide a rationale for introducing bank-like regulation for MMFs. For example, mandating that stable NAV MMFs be reorganized as SPBs might subject these MMFs to banking oversight and regulation, including requirements for reserves and capital buffers, and provide MMFs with access to a liquidity backstop and insurance coverage within a regulatory framework specifically designed for mitigation of systemic risk.[33] If each MMF were offered the option of implementing a floating NAV as an alternative to reorganizing as a bank, the reorganization requirement for stable NAV MMFs might be viewed as part of a two-tier system for MMFs.[34]

Although the conceptual basis for converting stable NAV MMFs to SPBs is seemingly straightforward, in practice this option spans a broad range of possible implementations, most of which would require legislative changes and complex interagency regulatory coordination. The advantages and disadvantages of this reform option depend on how exactly the conversion to SPBs would be implemented and

[32] For example, after Federal Open Market Committee (FOMC) actions that lower the FOMC's target for the federal funds rate, MMF shadow NAVs rise and institutional MMFs often experience large net inflows.

[33] Such an approach to MMF reform was advocated by the Group of Thirty. *See* Group of Thirty, *Financial Reform: A Framework for Financial Stability,* released on January 15, 2009.

[34] There may be a question as to whether floating NAV MMFs—if such funds are offered—should or should not be required to reorganize as SPBs. Other mutual funds with floating NAVs, such as ultra-short bond funds, presumably would not be affected by a mandate that MMFs reorganize as SPBs. The principal distinction between other (non-MMF) mutual funds and floating NAV MMFs would be that the latter are constrained by rule 2a–7 and thus have less risky portfolios, so the advantages and disadvantages of mandating these funds to reorganize as banks would have to be carefully evaluated. However, policymakers could consider prohibiting floating NAV MMFs from offering bank-like services that attract risk-averse investors, such as the ability to provide transactions services.

how the new banks would be structured. A thorough discussion of the full range of possibilities—including their feasibility, probable effect on the MMF industry, broader implications for the banking system, and likely efficacy in mitigating systemic risk—would be quite complex and is beyond the scope of this report.

As an example of the issues that this option involves, one possible approach to its implementation would be to preserve stable NAV MMFs as standalone entities but to treat their shares as deposits for the purposes of banking law. These shares, unlike other deposits, might be claims specifically (and only) on MMF assets, which could continue to be subject to strict risk-limiting regulations such as those provided by rule 2a–7 or similar rules. The introduction of such hybrid investment vehicles would preserve investors' opportunity to benefit from mutualized investments in private money market instruments, but, being a novel combination of features of banks and mutual funds, such vehicles would also present complex regulatory and operational challenges. In contrast, other approaches to converting MMFs to SPBs, such as absorbing or transforming stable NAV MMFs into financial institutions that offer traditional deposits, might be simpler to accomplish in practice, but nonetheless subject to different sets of challenges. In particular, if the deposits offered by the new SPBs were only of the types currently offered by other banks, investors—and particularly retail investors, who have few alternative opportunities to obtain diversified exposures to money market instruments—would lose access to important investment options.[35] In addition, to the extent that banks have different preferences for portfolio assets than MMFs, a simple transformation of MMFs into depository institutions might lead to a decline in the availability of short-term financing for firms and state and local governments that currently rely on money markets to satisfy their funding needs. Considerable further study would thus be needed in pursuing this option.

Leaving aside the details of how exactly this option could be implemented, in general terms, a principal advantage of reorganizing MMFs as SPBs is that such a change would provide MMFs with a broad regulatory framework similar to existing regulatory systems that are designed for mitigation of systemic risk. Investments in MMFs and insured deposits—which already serve some similar functions, particularly for retail investors—could be regulated similarly. MMFs and their investors might benefit from access to government insurance and emergency liquidity facilities at a price similar to that currently paid by depository institutions. Importantly, such access would not require any extraordinary government actions (such as the establishment in September 2008 of Treasury's Temporary Guarantee Program for Money Market Funds or the creation of the Federal Reserve's AMLF); instead, the terms of such access would be codified and well-understood in advance.

Moreover, by providing explicit capital buffers, access to a liquidity backstop, and deposit insurance, a conversion of stable NAV MMFs to SPBs might substantially reduce the uncertainties and systemic risks associated with MMF sponsors' current practice of discretionary capital support. Clear rules for how the buffers, backstop, and insurance would be used would improve the transparency of the allocation of risks among market participants.

However, the capital needed to reorganize MMFs as SPBs may be a significant hurdle to successful implementation of this option. Access to the Federal Reserve discount window and deposit insurance coverage most likely would require that the new SPBs hold reservable deposits and meet specific capitalization standards.[36] Given the scale of assets under management in the MMF industry, MMF sponsors (or banks) that wish to keep funds operating would have to raise substantial equity—probably at least tens of billions of dollars—to meet regulatory capital requirements.[37] Raising such sums would be a considerable challenge. The asset management business typically is not capital intensive, so many asset managers—and several of the largest sponsors of MMFs—are lightly capitalized and probably could not provide such amounts of capital. If asset managers or other firms were unwilling or unable to raise the capital needed to operate the new SPBs, a sharp reduction in assets in stable NAV MMFs might diminish their capacity to supply short-term credit, curtail the availability of an attractive investment option (particularly for retail investors), and motivate institutional investors to shift assets to unregulated vehicles.

An additional hurdle to converting MMFs to SPBs would be the substantial increase in explicit government guarantees that would result from the creation of new insured deposits. The potential liability to the government probably would far exceed any premiums that could be collected for some time.

Uncertainties about the reaction of institutional investors to MMFs reorganized as SPBs raise some important concerns about whether such reorganizations would provide a substantial degree of systemic-risk mitigation. Coverage limits on deposit insurance would leave many large investors unprotected in case of a significant capital loss. Thus, even with the protections afforded to banks, MMFs would still be vulnerable to runs by institutional investors, unless much higher deposit insurance limits were allowed for the newly created SPBs. Moreover, even in the absence of runs, institutional MMFs often experience volatile cash flows, and the potential effects of large and high-frequency flows into and out of the banking system (if MMFs become SPBs) would need to be analyzed carefully.

The reaction of institutional investors to the altered set of investment opportunities may also have unintended consequences. For example, SPBs that pay positive net yields to investors (depositors) would be very attractive for institutional investors who currently cannot receive interest on traditional bank deposits.[38] Thus, on the one hand, the new SPBs might prompt shifts of assets by institutional investors from the traditional banking system. On the other hand, a substantial mandatory capital

[35] In contrast, institutional investors could continue to obtain such exposures either by investing directly in money market instruments or by holding shares in offshore MMFs, enhanced cash funds, and other stable value vehicles. Hence, absorption of MMFs by banks might have the unintended effect of reducing investment opportunities for retail investors, who generally did not participate in the run on MMFs in 2008, while leaving money market investment options for institutional investors largely intact.

[36] Currently, MMFs are essentially 100 percent capital—their liabilities are the equity shares held by investors—so the meaning of "capital requirements" for such funds is not clear. However, if MMFs were reorganized as SPBs, their capital structure would become more complex. MMF shares would likely be converted to deposit liabilities, and MMFs would have to hold additional capital (equity) buffers to absorb first losses. Capital requirements would regulate the size of such buffers.

[37] The magnitude of the capital required might be reduced if floating NAV MMFs were not required to reorganize as SPBs and if a substantial number of funds elected to float their NAVs rather than reorganize as banks. In addition, the capital required might be reduced somewhat if regulators determined that the nature of the assets held by MMFs justifies capital requirements that are lower than those imposed on commercial banks and thrifts.

[38] Section 627 of the Dodd-Frank Act repeals the prohibition on banks paying interest on corporate demand deposit accounts effective July 21, 2011.

buffer for MMFs would reduce their net yields and possibly motivate institutional investors to move assets from MMFs to unregulated alternatives (particularly if regulatory reform does not include new constraints on such vehicles). The effect of these competing incentives on institutional investors' cash management practices is uncertain, but it is at least plausible that a reorganization of MMFs as SPBs may lead to a net shift of assets to unregulated investment vehicles.

h. Enhanced Constraints on Unregulated MMF Substitutes

New rules intended to reduce the susceptibility of MMFs to runs generally also will reduce the appeal of the funds to many investors. For example, several of the reforms recently adopted by the SEC probably will reduce the net yields that the funds pay to shareholders, and a switch to floating NAVs would eliminate a feature that some MMF shareholders see as essential.

Reforms that reduce the appeal of MMFs may motivate some institutional investors to move assets to alternative cash management vehicles with stable NAVs, such as offshore MMFs, enhanced cash funds, and other stable value vehicles. These vehicles typically invest in the same types of short-term instruments that MMFs hold and share many of the features that make MMFs vulnerable to runs, so growth of unregulated MMF substitutes would likely increase systemic risks. However, such funds need not comply with rule 2a–7 or other ICA protections and in general are subject to little or no regulatory oversight. In addition, the risks posed by MMF substitutes are difficult to monitor, since they provide far less market transparency than MMFs.

Thus, effective mitigation of systemic risks may require policy reforms targeted outside the MMF industry to address risks posed by funds that compete with MMFs and to combat regulatory arbitrage that might offset intended reductions in MMF risks. Such reforms most likely would require legislation and action by the SEC and other agencies. For example, consideration should be given to prohibiting unregistered investment vehicles from maintaining stable NAVs, perhaps by amending sections 3(c)(1) and 3(c)(7) of the ICA to specify that exemptions from the requirement to register as an investment company do not apply to funds that seek a stable NAV. Banking and state insurance regulators might consider additional restrictions to mitigate systemic risk for bank common and collective funds and other investment pools that seek a stable NAV but that are exempt from registration under sections 3(c)(3) and 3(c)(11) of the ICA.

[FR Doc. 2010–28177 Filed 11–5–10; 8:45 am]

BILLING CODE 8011–01–P

SECURITIES AND EXCHANGE COMMISSION

[Release No. 34–63223; File No. SR–FINRA–2010–054]

Self-Regulatory Organizations; Financial Industry Regulatory Authority, Inc.; Notice of Filing and Immediate Effectiveness of Proposed Rule Change To Extend the Operational Date of SR–FINRA–2009–065

November 1, 2010.

Pursuant to Section 19(b)(1) of the Securities Exchange Act of 1934 ("Act") [1] and Rule 19b-4 thereunder,[2] notice is hereby given that on October 27, 2010, the Financial Industry Regulatory Authority, Inc. ("FINRA") filed with the Securities and Exchange Commission ("SEC" or "Commission") the proposed rule change as described in Items I and II, which Items have been prepared by FINRA. FINRA has designated the proposed rule change as constituting a "non-controversial" rule change under paragraph (f)(6) of Rule 19b-4 under the Act,[3] which renders the proposal effective upon receipt of this filing by the Commission. The Commission is publishing this notice to solicit comments on the proposed rule change from interested persons.

I. Self-Regulatory Organization's Statement of the Terms of Substance of the Proposed Rule Change

FINRA is proposing to extend the period during which FINRA may make the rule changes set forth in SR–FINRA–2009–065 and approved by the SEC on February 22, 2010, effective to no later than June 1, 2011.[4]

The proposed rule change would not make any new changes to the text of FINRA rules.

[1] 15 U.S.C. 78s(b)(1).

[2] 17 CFR 240.19b–4.

[3] 17 CFR 240.19b–4(f)(6).

[4] *See* Securities Exchange Act Release No. 61566 (February 22, 2010), 75 FR 9262 (March 1, 2010) (Order Approving File No. SR–FINRA–2009–065) (hereinafter, "SEC Order Approving TRACE Expansion—Asset-Backed Securities").

II. Self-Regulatory Organization's Statement of the Purpose of, and Statutory Basis for, the Proposed Rule Change

In its filing with the Commission, FINRA included statements concerning the purpose of and basis for the proposed rule change and discussed any comments it received on the proposed rule change. The text of these statements may be examined at the places specified in Item IV below. FINRA has prepared summaries, set forth in sections A, B, and C below, of the most significant aspects of such statements.

A. Self-Regulatory Organization's Statement of the Purpose of, and Statutory Basis for, the Proposed Rule Change

1. Purpose

On October 1, 2009, FINRA filed SR–FINRA–2009–065, a proposed rule change to expand the Trade Reporting and Compliance Engine ("TRACE") to designate asset-backed securities, mortgage-backed securities and other similar securities (collectively, "Asset-Backed Securities") as eligible for TRACE, and to establish reporting, fee and other requirements for such securities. In SR–FINRA–2009–065, FINRA stated that it would announce the effective date of the proposed rule change in a *Regulatory Notice* to be published "no later than 60 days following Commission approval" and the effective date would be "no later than 270 days following publication" of the *Regulatory Notice* announcing the Commission's approval.

The proposed rule change was published for notice and comment.[5] FINRA filed its response to comments on December 22, 2009,[6] and Amendment No. 1 to SR–FINRA–2009–065 on January 19, 2010 (hereinafter, SR–FINRA–2009–065 and Amendment No. 1 thereto are, together, the "TRACE ABS filing").[7] The Commission

[5] *See* Securities Exchange Act Release No. 60860 (October 21, 2009), 74 FR 55600 (October 28, 2009) (Notice of Filing of File No. SR–FINRA–2009–065).

[6] *See* Letter from Sharon Zackula, Associate Vice President and Associate General Counsel, FINRA, to Elizabeth M. Murphy, Secretary, SEC, dated December 22, 2009.

[7] The TRACE ABS filing included amendments to: (a) Rule 6710 to amend the defined terms, "Asset-Backed Security" and "TRACE-Eligible Security" to include Asset-Backed Securities as TRACE-Eligible Securities, to amend several other defined terms, and to add several new defined terms, most of which relate to Asset-Backed Securities; (b) Rule 6730 to require the reporting of Asset-Backed Securities transactions, to establish a six-month pilot period for reporting such transactions no later than T + 1 during TRACE System hours, and to amend certain requirements in connection with the reporting of commissions, factors, transaction size and settlement terms in

approved the TRACE ABS filing on February 22, 2010.[8]

On April 14, 2010, FINRA filed for immediate effectiveness SR–FINRA–2010–019, a proposed rule change to extend by 45 days the proposed implementation period for SR–FINRA–2009–065.[9] On April 23, 2010, FINRA published *Regulatory Notice* 10–23 announcing Commission approval of the TRACE ABS Filing. *Regulatory Notice* 10–23 briefly described the rule changes, and, in reliance upon the 45-day extension provided for in SR–FINRA–2010–019, announced that the effective date of such rule changes would be February 14, 2011.

FINRA has determined that it would be beneficial to delay the effective date of the TRACE ABS filing to no later than June 1, 2011. FINRA will publish a *Regulatory Notice* no later than 30 days following the operative date of this proposed rule change to announce the revised effective date of the TRACE ABS filing, and to indicate that the previously announced effective date, February 14, 2011, is no longer valid.

The complexity and variety of structures of Asset-Backed Securities present significant operational and technical challenges. For example, new processes and systems are being developed and must be implemented across the industry to assure the integrity of the Asset-Backed Securities reference data that facilitates timely and accurate reporting. In addition, FINRA believes that it is very important to provide extended time for coordinated testing among firms and FINRA. Accordingly, FINRA believes a delay of the effective date until no later than June 1, 2011 is warranted.

FINRA has filed the proposed rule change for immediate effectiveness and has requested that the SEC waive the requirement that the proposed rule change not become operative for 30 days after the date of the filing, such that FINRA can implement the proposed rule change immediately.

2. Statutory Basis

FINRA believes that the proposed rule change is consistent with the provisions of Section 15A(b)(6) of the Act,[10] which requires, among other things, that FINRA rules must be designed to prevent fraudulent and manipulative acts and practices, to promote just and equitable principles of trade, and, in general, to protect investors and the public interest. The flexibility to establish an effective date no later than June 1, 2011 to implement the TRACE ABS filing will allow FINRA and members sufficient time to make additional necessary enhancements to the TRACE system and member systems, and to engage in coordinated testing of the technology. These steps will facilitate timely and accurate reporting of transactions in Asset-Backed Securities, and enhance FINRA's surveillance of the market in Asset-Backed Securities for the protection of investors and in furtherance of the public interest.

B. Self-Regulatory Organization's Statement on Burden on Competition

FINRA does not believe that the proposed rule change will result in any burden on competition that is not necessary or appropriate in furtherance of the purposes of the Act.

C. Self-Regulatory Organization's Statement on Comments on the Proposed Rule Change Received From Members, Participants, or Others

Written comments were neither solicited nor received.

III. Date of Effectiveness of the Proposed Rule Change and Timing for Commission Action

The Exchange represented that the proposed rule change qualifies for immediate effectiveness pursuant to Section 19(b)(3)(A) of the Exchange Act[11] and Rule 19b–4(f)(6) thereunder[12] because it: (i) Does not significantly affect the protection of investors or the public interest; (ii) does not impose any significant burden on competition; and (iii) by its terms, does not become operative for 30 days from the date on which it was filed, or such shorter time as the Commission may designate if consistent with the protection of investors and the public interest.[13]

The Exchange has requested that the Commission waive the 30-day operative delay, so that the proposed rule change may become operative upon filing. The Commission hereby grants the Exchange's request.[14] The Commission believes that waiving the 30-day operative delay is consistent with the protection of investors and the public interest. The proposal appears reasonably designed to allow firms sufficient time to make necessary systems and operational changes to facilitate the timely and accurate reporting of Asset-Backed Securities transactions as required by the TRACE ABS filing, and waiving the 30-day pre-operative period will allow FINRA to communicate the new operative date to its members without undue delay.

At any time within 60 days of the filing of the proposed rule change, the Commission summarily may temporarily suspend such rule change if it appears to the Commission that such action is necessary or appropriate in the public interest, for the protection of investors, or otherwise in furtherance of the purposes of the Act.

IV. Solicitation of Comments

Interested persons are invited to submit written data, views, and arguments concerning the foregoing, including whether the proposed rule change is consistent with the Act. Comments may be submitted by any of the following methods:

Electronic Comments

- Use the Commission's Internet comment form (*http://www.sec.gov/rules/sro.shtml*); or
- Send an e-mail to *rule-comments@sec.gov.* Please include File Number SR–FINRA–2010–054 on the subject line.

Paper Comments

- Send paper comments in triplicate to Elizabeth M. Murphy, Secretary, Securities and Exchange Commission, 100 F Street, NE., Washington, DC 20549–1090.

All submissions should refer to File Number SR–FINRA–2010–054. This file number should be included on the subject line if e-mail is used. To help the Commission process and review your comments more efficiently, please use only one method. The Commission will

Asset-Backed Securities transactions; (c) Rule 6750 to provide that information on a transaction in a TRACE-Eligible Security that is an Asset-Backed Security will not be disseminated; (d) Rule 6760 to amend the notification requirements; (e) Rule 7730 to establish fees for reporting transactions in Asset-Backed Securities; and (f) the Rule 6700 Series and Rule 7730 to incorporate certain other technical, administrative and clarifying changes.

[8] *See* SEC Order Approving TRACE Expansion—Asset-Backed Securities.

[9] *See* Securities Exchange Act Release No. 61948 (April 20, 2010), 75 FR 22670 (April 29, 2010) (Notice of Filing and Immediate Effectiveness of File No. SR–FINRA–2010–019 to Extend the Implementation Period for SR–FINRA–2009–65).

[10] 15 U.S.C. 78*o*–3(b)(6).

[11] 15 U.S.C. 78s(b)(3)(A).

[12] 17 CFR 240.19b–4(f)(6).

[13] In addition, Rule 19b–4(f)(6)(iii) requires a self-regulatory organization to submit to the Commission written notice of its intent to file the proposed rule change, along with a brief description and text of the proposed rule change, at least five business days prior to the date of filing of the proposed rule change, or such shorter time as designated by the Commission. The Commission has waived the five-day pre-filing period in this case.

[14] For the purposes only of waiving the 30-day operative delay, the Commission has considered the proposed rule's impact on efficiency, competition, and capital formation. *See* 15 U.S.C. 78c(f).

post all comments on the Commission's Internet Web site (*http://www.sec.gov/rules/sro.shtml*). Copies of the submission, all subsequent amendments, all written statements with respect to the proposed rule change that are filed with the Commission, and all written communications relating to the proposed rule change between the Commission and any person, other than those that may be withheld from the public in accordance with the provisions of 5 U.S.C. 552, will be available for Web site viewing and printing in the Commission's Public Reference Room, 100 F Street, NE., Washington, DC 20549, on official business days between the hours of 10 a.m. and 3 p.m. Copies of the filing also will be available for inspection and copying at the principal office of FINRA. All comments received will be posted without change; the Commission does not edit personal identifying information from submissions. You should submit only information that you wish to make available publicly. All submissions should refer to File Number SR–FINRA–2010–054 and should be submitted on or before November 29, 2010.

For the Commission, by the Division of Trading and Markets, pursuant to delegated authority.[15]

Florence E. Harmon,

Deputy Secretary.

[FR Doc. 2010–28066 Filed 11–5–10; 8:45 am]

BILLING CODE 8011–01–P

[15] 17 CFR 200.30–3(a)(12).

SECURITIES AND EXCHANGE COMMISSION

[Release No. 34–63229; File No. SR–NYSE–2010–71]

Self-Regulatory Organizations; Notice of Filing and Immediate Effectiveness of Proposed Rule Change by New York Stock Exchange LLC To Increase the Maximum Order Size Accepted by Floor Broker Systems From 25,000,000 Shares to 99,000,000 Shares

November 2, 2010.

Pursuant to Section 19(b)(1)[1] of the Securities Exchange Act of 1934 (the "Act")[2] and Rule 19b–4 thereunder,[3] notice is hereby given that on November 1, 2010, New York Stock Exchange LLC ("NYSE" or the "Exchange") filed with the Securities and Exchange Commission (the "Commission") the proposed rule change as described in Items I and II below, which Items have been prepared by the self-regulatory organization. The Commission is publishing this notice to solicit comments on the proposed rule change from interested persons.

I. Self-Regulatory Organization's Statement of the Terms of Substance of the Proposed Rule Change

The Exchange proposes to amend NYSE Rule 1000 regarding the maximum order size accepted by Floor broker systems from 25,000,000 shares to 99,000,000 shares. The text of the proposed rule change is available at the Exchange, on the Commission's Web site at *http://www.sec.gov*, at the Commission's Public Reference Room, and *http://www.nyse.com.*

II. Self-Regulatory Organization's Statement of the Purpose of, and Statutory Basis for, the Proposed Rule Change

In its filing with the Commission, the self-regulatory organization included statements concerning the purpose of, and basis for, the proposed rule change and discussed any comments it received on the proposed rule change. The text of those statements may be examined at the places specified in Item IV below. The Exchange has prepared summaries, set forth in sections A, B, and C below, of the most significant parts of such statements.

A. Self-Regulatory Organization's Statement of the Purpose of, and Statutory Basis for, the Proposed Rule Change

1. Purpose

The Exchange proposes to amend Rule 1000 to provide that Floor broker systems shall accept a maximum order size of 99,000,000, an increase from the current 25,000,000 share limit.

a. Background

Floor brokers receive orders from customers via telephone and electronic delivery to Floor broker systems. Details of orders delivered to Floor broker systems are automatically transmitted to a designated Exchange database as required by Rule 123(e). Orders delivered telephonically must be manually entered by the broker (or clerk) into Exchange systems in order to capture the order details in the designated Exchange database pursuant to Rule 123(e) before the broker can represent these orders on the Exchange. Exchange systems currently accept orders up to 25,000,000 shares. Exchange systems include Display Book®, which is the Exchange's matching engine, and Floor broker systems, which are the systems made available to Floor brokers to accept orders from customers and if warranted, enter such orders into the Display Book. There is no limit on the size of orders that can be transmitted to a Floor broker telephonically. Customers who wish to send orders in excess of 25,000,000 shares must break these orders into smaller sizes to send electronically or submit these orders by telephone to the broker. The broker (or clerk) must then enter these telephonic orders in smaller quantities into Exchange systems.

b. Proposed Amendment to NYSE Amex Equities Rule 1000

The Exchange proposes to amend Rule 1000 to state that Floor broker systems shall accept a maximum order size up to 99,000,000 shares. This enhancement would allow more efficient electronic processing of very large orders sent to Floor brokers.

Orders sent to Display Book by Floor brokers are subject to the same maximum order size of 25,000,000 shares as all other market participants.

The Exchange notes that parallel changes are proposed to be made to the rules of the NYSE Amex LLC.[4]

The Exchange will implement the systemic changes on or about December 10, 2010 and will notify Floor brokers when the Floor broker systems have been modified to accept a maximum order size up to 99,000,000 shares.

2. Statutory Basis

The basis under the Securities Exchange Act of 1934 (the "Act")[5] for this proposed rule change is the requirement under Section 6(b)(5)[6] that an exchange have rules that are designed to promote just and equitable principles of trade, to remove impediments to and perfect the mechanism of a free and open market and a national market system and, in general, to protect investors and the public interest. The Exchange believes that the proposed rule change accomplishes these goals by providing efficient methods for customers to transmit orders to Floor brokers.

B. Self-Regulatory Organization's Statement on Burden on Competition

The Exchange does not believe that the proposed rule change will impose any burden on competition that is not necessary or appropriate in furtherance of the purposes of the Act.

[1] 15 U.S.C. 78s(b)(1).

[2] 15 U.S.C. 78a.

[3] 17 CFR 240.19b–4.

[4] *See* SR–NYSEAmex–2010–102.

[5] 15 U.S.C. 78a.

[6] 15 U.S.C. 78f(b)(5).

C. Self-Regulatory Organization's Statement on Comments on the Proposed Rule Change Received From Members, Participants, or Others

No written comments were solicited or received with respect to the proposed rule change.

III. Date of Effectiveness of the Proposed Rule Change and Timing for Commission Action

Because the foregoing proposed rule change does not significantly affect the protection of investors or the public interest, does not impose any significant burden on competition, and, by its terms, does not become operative for 30 days from the date on which it was filed, or such shorter time as the Commission may designate, it has become effective pursuant to Section 19(b)(3)(A) of the Act [7] and Rule 19b–4(f)(6) thereunder.[8]

At any time within 60 days of the filing of the proposed rule change, the Commission summarily may temporarily suspend such rule change if it appears to the Commission that such action is necessary or appropriate in the public interest, for the protection of investors, or otherwise in furtherance of the purposes of the Act.

IV. Solicitation of Comments

Interested persons are invited to submit written data, views, and arguments concerning the foregoing, including whether the proposed rule change is consistent with the Act. Comments may be submitted by any of the following methods:

Electronic Comments

- Use the Commission's Internet comment form (*http://www.sec.gov/rules/sro.shtml*); or
- Send an e-mail to *rule-comments@sec.gov.* Please include File Number SR–NYSE–2010–71 on the subject line.

Paper Comments

- Send paper comments in triplicate to Elizabeth M. Murphy, Secretary, Securities and Exchange Commission, 100 F Street, NE., Washington, DC 20549–1090.

All submissions should refer to File Number SR–NYSE–2010–71. This file number should be included on the subject line if e-mail is used. To help the Commission process and review your comments more efficiently, please use only one method. The Commission will post all comments on the Commission's Internet Web site (*http://www.sec.gov/rules/sro.shtml*). Copies of the submission, all subsequent amendments, all written statements with respect to the proposed rule change that are filed with the Commission, and all written communications relating to the proposed rule change between the Commission and any person, other than those that may be withheld from the public in accordance with the provisions of 5 U.S.C. 552, will be available for Web site viewing and printing in the Commission's Public Reference Room, 100 F Street, NE., Washington, DC 20549, on official business days between the hours of 10 a.m. and 3 p.m. Copies of the filing also will be available for inspection and copying at the principal office of the Exchange. All comments received will be posted without change; the Commission does not edit personal identifying information from submissions. You should submit only information that you wish to make available publicly. All submissions should refer to File Number SR–NYSE–2010–71 and should be submitted on or before November 29, 2010.

For the Commission, by the Division of Trading and Markets, pursuant to delegated authority.[9]

Florence E. Harmon,

Deputy Secretary.

[FR Doc. 2010–28184 Filed 11–5–10; 8:45 am]

BILLING CODE 8011–01–P

[7] 15 U.S.C. 78s(b)(3)(A).

[8] 17 CFR 240.19b–4(f)(6). In addition, Rule 19b–4(f)(6)(iii) requires the Exchange to give the Commission written notice of the Exchange's intent to file the proposed rule change, along with a brief description and text of the proposed rule change, at least five business days prior to the date of filing of the proposed rule change, or such shorter time as designated by the Commission. The Exchange has satisfied this requirement.

[9] 17 CFR 200.30–3(a)(12).

SECURITIES AND EXCHANGE COMMISSION

[Release No. 34–63228; File No. SR–NYSEAmex–2010–102]

Self-Regulatory Organizations; Notice of Filing and Immediate Effectiveness of Proposed Rule Change by NYSE Amex LLC To Increase the Maximum Order Size Accepted by Floor Broker Systems From 25,000,000 Shares to 99,000,000 Shares

November 2, 2010.

Pursuant to Section 19(b)(1) [1] of the Securities Exchange Act of 1934 (the "Act") [2] and Rule 19b–4 thereunder,[3] notice is hereby given that on November 1, 2010, NYSE Amex LLC (the "Exchange" or "NYSE Amex") filed with the Securities and Exchange Commission (the "Commission") the proposed rule change as described in Items I and II below, which Items have been prepared by the self-regulatory organization. The Commission is publishing this notice to solicit comments on the proposed rule change from interested persons.

I. Self-Regulatory Organization's Statement of the Terms of Substance of the Proposed Rule Change

The Exchange proposes to amend NYSE Amex Equities Rule 1000 regarding the maximum order size accepted by Floor broker systems from 25,000,000 shares to 99,000,000 shares. The text of the proposed rule change is available at the Exchange, on the Commission's Web site at *http://www.sec.gov,* at the Commission's Public Reference Room, and *http://www.nyse.com.*

II. Self-Regulatory Organization's Statement of the Purpose of, and Statutory Basis for, the Proposed Rule Change

In its filing with the Commission, the self-regulatory organization included statements concerning the purpose of, and basis for, the proposed rule change and discussed any comments it received on the proposed rule change. The text of those statements may be examined at the places specified in Item IV below. The Exchange has prepared summaries, set forth in sections A, B, and C below, of the most significant parts of such statements.

A. Self-Regulatory Organization's Statement of the Purpose of, and Statutory Basis for, the Proposed Rule Change

1. Purpose

The Exchange proposes to amend Rule 1000 to provide that Floor broker systems shall accept a maximum order size of 99,000,000, an increase from the current 25,000,000 share limit.

a. Background

Floor brokers receive orders from customers via telephone and electronic delivery to Floor broker systems. Details of orders delivered to Floor broker systems are automatically transmitted to a designated Exchange database as required by NYSE Amex Equities Rule 123(e). Orders delivered telephonically must be manually entered by the broker (or clerk) into Exchange systems in order to capture the order details in the designated Exchange database pursuant to Rule 123(e) before the broker can

[1] 15 U.S.C. 78s(b)(1).

[2] 15 U.S.C. 78a.

[3] 17 CFR 240.19b–4.

represent these orders on the Exchange. Exchange systems currently accept orders up to 25,000,000 shares. Exchange systems include Display Book®, which is the Exchange's matching engine, and Floor broker systems, which are the systems made available to Floor brokers to accept orders from customers and if warranted, enter such orders into the Display Book. There is no limit on the size of orders that can be transmitted to a Floor broker telephonically. Customers who wish to send orders in excess of 25,000,000 million shares must break these orders into smaller sizes to send electronically or submit these orders by telephone to the broker. The broker (or clerk) must then enter these telephonic orders in smaller quantities into Exchange systems.

b. Proposed Amendment to NYSE Amex Equities Rule 1000

The Exchange proposes to amend Rule 1000 to state that Floor broker systems shall accept a maximum order size up to 99,000,000 shares. This enhancement would allow more efficient electronic processing of very large orders sent to Floor brokers.

Orders sent to Display Book by Floor brokers are subject to the same maximum order size of 25,000,000 shares as all other market participants.

The Exchange notes that parallel changes are proposed to be made to the rules of the New York Stock Exchange LLC.[4]

The Exchange will implement the systemic changes on or about December 10, 2010 and will notify Floor brokers when the Floor broker systems have been modified to accept a maximum order size up to 99,000,000 shares.

2. Statutory Basis

The basis under the Securities Exchange Act of 1934 (the "Act")[5] for this proposed rule change is the requirement under Section 6(b)(5)[6] that an exchange have rules that are designed to promote just and equitable principles of trade, to remove impediments to and perfect the mechanism of a free and open market and a national market system and, in general, to protect investors and the public interest. The Exchange believes that the proposed rule change accomplishes these goals by providing efficient methods for customers to transmit orders to Floor brokers.

[4] *See* SR–NYSE–2010–71.

[5] 15 U.S.C. 78a.

[6] 15 U.S.C. 78f(b)(5).

B. Self-Regulatory Organization's Statement on Burden on Competition

The Exchange does not believe that the proposed rule change will impose any burden on competition that is not necessary or appropriate in furtherance of the purposes of the Act.

C. Self-Regulatory Organization's Statement on Comments on the Proposed Rule Change Received From Members, Participants, or Others

No written comments were solicited or received with respect to the proposed rule change.

III. Date of Effectiveness of the Proposed Rule Change and Timing for Commission Action

Because the foregoing proposed rule change does not significantly affect the protection of investors or the public interest, does not impose any significant burden on competition, and, by its terms, does not become operative for 30 days from the date on which it was filed, or such shorter time as the Commission may designate, it has become effective pursuant to Section 19(b)(3)(A) of the Act[7] and Rule 19b–4(f)(6) thereunder.[8]

At any time within 60 days of the filing of the proposed rule change, the Commission summarily may temporarily suspend such rule change if it appears to the Commission that such action is necessary or appropriate in the public interest, for the protection of investors, or otherwise in furtherance of the purposes of the Act.

IV. Solicitation of Comments

Interested persons are invited to submit written data, views, and arguments concerning the foregoing, including whether the proposed rule change is consistent with the Act. Comments may be submitted by any of the following methods:

Electronic Comments

- Use the Commission's Internet comment form (*http://www.sec.gov/rules/sro.shtml*); or
- Send an e-mail to *rule-comments@sec.gov.* Please include File Number SR–NYSEAmex–2010–102 on the subject line.

[7] 15 U.S.C. 78s(b)(3)(A).

[8] 17 CFR 240.19b–4(f)(6). In addition, Rule 19b–4(f)(6)(iii) requires the Exchange to give the Commission written notice of the Exchange's intent to file the proposed rule change, along with a brief description and text of the proposed rule change, at least five business days prior to the date of filing of the proposed rule change, or such shorter time as designated by the Commission. The Exchange has satisfied this requirement.

Paper Comments

- Send paper comments in triplicate to Elizabeth M. Murphy, Secretary, Securities and Exchange Commission, 100 F Street, NE., Washington, DC 20549–1090.

All submissions should refer to File Number SR–NYSEAmex–2010–102. This file number should be included on the subject line if e-mail is used. To help the Commission process and review your comments more efficiently, please use only one method. The Commission will post all comments on the Commission's Internet Web site (*http://www.sec.gov/rules/sro.shtml*). Copies of the submission, all subsequent amendments, all written statements with respect to the proposed rule change that are filed with the Commission, and all written communications relating to the proposed rule change between the Commission and any person, other than those that may be withheld from the public in accordance with the provisions of 5 U.S.C. 552, will be available for Web site viewing and printing in the Commission's Public Reference Room, 100 F Street, NE., Washington, DC 20549, on official business days between the hours of 10 a.m. and 3 p.m. Copies of the filing also will be available for inspection and copying at the principal office of the Exchange. All comments received will be posted without change; the Commission does not edit personal identifying information from submissions. You should submit only information that you wish to make available publicly. All submissions should refer to File Number SR–NYSEAmex–2010–102 and should be submitted on or before November 29, 2010.

For the Commission, by the Division of Trading and Markets, pursuant to delegated authority.[9]

Florence E. Harmon,

Deputy Secretary.

[FR Doc. 2010–28183 Filed 11–5–10; 8:45 am]

BILLING CODE 8011–01–P

[9] 17 CFR 200.30–3(a)(12).

SECURITIES AND EXCHANGE COMMISSION

[Release No. 34–63227; File No. SR–EDGA–2010–17]

Self-Regulatory Organizations; EDGA Exchange, Inc.; Notice of Filing and Immediate Effectiveness of Proposed Rule Change Relating to Amendments to the EDGA Exchange, Inc. Fee Schedule

November 2, 2010.

Pursuant to Section 19(b)(1) of the Securities Exchange Act of 1934 (the "Act"),[1] and Rule 19b–4 thereunder,[2] notice is hereby given that on October 29, 2010, the EDGA Exchange, Inc. (the "Exchange" or the "EDGA") filed with the Securities and Exchange Commission ("Commission") the proposed rule change as described in Items I, II and III below, which items have been prepared by the self-regulatory organization. The Commission is publishing this notice to solicit comments on the proposed rule change from interested persons.

I. Self-Regulatory Organization's Statement of the Terms of Substance of the Proposed Rule Change

The Exchange proposes to amend its fees and rebates applicable to Members [3] of the Exchange pursuant to EDGA Rule 15.1(a) and (c) by making an amendment to its fee schedule.

All of the changes described herein are applicable to EDGA Members. The text of the proposed rule change is available on the Exchange's Internet Web site at *http://www.directedge.com*.

II. Self-Regulatory Organization's Statement of the Purpose of, and Statutory Basis for, the Proposed Rule Change

In its filing with the Commission, the self-regulatory organization included statements concerning the purpose of, and basis for, the proposed rule change and discussed any comments it received on the proposed rule change. The text of these statements may be examined at the places specified in Item IV below. The self-regulatory organization has prepared summaries, set forth in sections A, B and C below, of the most significant aspects of such statements.

A. Self-Regulatory Organization's Statement of the Purpose of, and Statutory Basis for, the Proposed Rule Change

1. Purpose

Currently, for Non-Displayed Orders, Members are charged $0.0010 per share. However, this rate is contingent upon a Member adding greater than 1,000,000 shares on a daily basis, measured monthly. Members not meeting this minimum are currently charged $0.0030 per share.

First, the Exchange proposes to add clarifying language in footnote 2 to state that a Flag H would be yielded in this situation. Next, the Exchange proposes to add an additional way for Members to be charged the reduced rate of $0.0010 per share. This additional method would allow Members to qualify for the reduced rate if they post on EDGA greater than 8,000,000 shares on a daily basis, measured monthly (yielding Flags B, V, Y, 3 or 4). The Exchange proposes to make a conforming amendment to change the word "this" to "either" in footnote 2 to clarify that a Member can receive the rate of $0.0010 per share by satisfying either condition.

Finally, the Exchange proposes to provide a reduced rate for non-displayed ("Flag H") executions for a non-aggregated MPID representing the volume of a Member and meeting certain criteria. For executions in stocks priced $1.00 and over, if the average daily volume ("ADV") of Flag H executions for a non-aggregated MPID is increased such that its ADV is 1,000,000 greater than its ADV of Flag H executions averaged across the month of October 2010, then the non-aggregated MPID would qualify for a rate of $0.00025 per share. For executions in stocks priced below $1.00, if the ADV of Flag H executions for a non-aggregated MPID is increased such that its ADV is 1,000,000 greater than its ADV of Flag H executions averaged across the month of October 2010, then the non-aggregated MPID would qualify for a rate of .025% of the total dollar volume of the Flag H executions. The Exchange believes that these reduced rates for Flag H executions will incent Members to add liquidity to EDGA.

The Exchange believes that the above pricing is appropriate since lower rates for Flag H executions are directly correlated with more stringent criteria. The lowest rate of $0.00025 per share for Flag H executions has the most stringent criteria associated with it and is a lower rate than the next best rate of $0.0010 per share, which in turn is a better rate than the default rate of $0.0030 per share for Flag H executions. For example, assuming an average ADV for the month of October 2010 of 500,000, a non-aggregated MPID would need 1.5 million in Flag H executions to qualify for the rate of $0.00025 per share. In order to qualify for the next best rate of $0.0010, a Member would have to add greater than 1 million shares or post greater than 8 million shares on a daily basis, measured monthly. If none of these criteria are met, the Member would receive the highest rate of $0.0030 per share for Flag H executions. In addition, these lower rates for Flag H executions also result, in part, from lower administrative costs associated with higher volume.

EDGA Exchange proposes to implement these amendments to the Exchange fee schedule on November 1, 2010.

2. Statutory Basis

The Exchange believes that the proposed rule change is consistent with the objectives of Section 6 of the Act,[4] in general, and furthers the objectives of Section 6(b)(4),[5] in particular, as it is designed to provide for the equitable allocation of reasonable dues, fees and other charges among its members and other persons using its facilities. The Exchange notes that it operates in a highly competitive market in which market participants can readily direct order flow to competing venues if they deem fee levels at a particular venue to be excessive. The proposed rule change reflects a competitive pricing structure designed to incent market participants to direct their order flow to the Exchange. In addition, the lower rates for Flag H executions also result, in part, from lower administrative costs associated with higher volume. Finally, the Exchange believes that the proposed rates are equitable in that they apply uniformly to all Members. The Exchange believes the fees and credits remain competitive with those charged by other venues and therefore continue to be reasonable and equitably allocated to Members.

B. Self-Regulatory Organization's Statement on Burden on Competition

The proposed rule change does not impose any burden on competition that is not necessary or appropriate in furtherance of the purposes of the Act.

[1] 15 U.S.C. 78s(b)(1).

[2] 17 CFR 240.19b–4.

[3] A Member is any registered broker or dealer, or any person associated with a registered broker or dealer, that has been admitted to membership in the Exchange.

[4] 15 U.S.C. 78f.

[5] 15 U.S.C. 78f(b)(4).

C. Self-Regulatory Organization's Statement on Comments on the Proposed Rule Change Received From Members, Participants or Others

The Exchange has not solicited, and does not intend to solicit, comments on this proposed rule change. The Exchange has not received any unsolicited written comments from members or other interested parties.

III. Date of Effectiveness of the Proposed Rule Change and Timing for Commission Action

The foregoing rule change has become effective pursuant to Section 19(b)(3) of the Act [6] and Rule 19b–4(f)(2) [7] thereunder. At any time within 60 days of the filing of such proposed rule change, the Commission summarily may temporarily suspend such rule change if it appears to the Commission that such action is necessary or appropriate in the public interest, for the protection of investors, or otherwise in furtherance of the purposes of the Act.

IV. Solicitation of Comments

Interested persons are invited to submit written data, views, and arguments concerning the foregoing, including whether the proposed rule change is consistent with the Act. Comments may be submitted by any of the following methods:

Electronic Comments

- Use the Commission's Internet comment form (*http://www.sec.gov/rules/sro.shtml*); or
- Send an e-mail to *rule-comments@sec.gov.* Please include File Number SR–EDGA–2010–17 on the subject line.

Paper Comments

- Send paper comments in triplicate to Elizabeth M. Murphy, Secretary, Securities and Exchange Commission, 100 F Street, NE., Washington, DC 20549–1090.

All submissions should refer to File Number SR–EDGA–2010–17. This file number should be included on the subject line if e-mail is used. To help the Commission process and review your comments more efficiently, please use only one method. The Commission will post all comments on the Commission's Internet Web site (*http://www.sec.gov/rules/sro.shtml*). Copies of the submission,[8] all subsequent amendments, all written statements with respect to the proposed rule change that are filed with the Commission, and all written communications relating to the proposed rule change between the Commission and any person, other than those that may be withheld from the public in accordance with the provisions of 5 U.S.C. 552, will be available for Web site viewing and printing in the Commission's Public Reference Room, 100 F Street, NE., Washington, DC 20549, on official business days between the hours of 10 a.m. and 3 p.m. Copies of the filing also will be available for inspection and copying at the principal office of the Exchange. All comments received will be posted without change; the Commission does not edit personal identifying information from submissions. You should submit only information that you wish to make available publicly. All submissions should refer to File Number SR–EDGA–2010–17 and should be submitted on or before November 29, 2010.

For the Commission, by the Division of Trading and Markets, pursuant to delegated authority.[9]

Florence E. Harmon,

Deputy Secretary.

[FR Doc. 2010–28182 Filed 11–5–10; 8:45 am]

BILLING CODE 8011–01–P

[6] 15 U.S.C. 78s(b)(3)(A).

[7] 17 CFR 19b–4(f)(2).

[8] The text of the proposed rule change is available on the Exchange's Web site at *http://www.directedge.com,* on the Commission's Web site at *http://www.sec.gov,* at EDGA, and at the Commission's Public Reference Room.

[9] 17 CFR 200.30–3(a)(12).

SECURITIES AND EXCHANGE COMMISSION

[Release No. 34–63226; File No. SR–EDGX–2010–16]

Self-Regulatory Organizations; EDGX Exchange, Inc.; Notice of Filing and Immediate Effectiveness of Proposed Rule Change Relating to Amendments to the EDGX Exchange, Inc. Fee Schedule

November 2, 2010.

Pursuant to Section 19(b)(1) of the Securities Exchange Act of 1934 (the "Act"),[1] and Rule 19b–4 thereunder,[2] notice is hereby given that on October 29, 2010, the EDGX Exchange, Inc. (the "Exchange" or the "EDGX") filed with the Securities and Exchange Commission ("Commission") the proposed rule change as described in Items I, II and III below, which items have been prepared by the self-regulatory organization. The Commission is publishing this notice to solicit comments on the proposed rule change from interested persons.

I. Self-Regulatory Organization's Statement of the Terms of Substance of the Proposed Rule Change

The Exchange proposes to amend its fees and rebates applicable to Members [3] of the Exchange pursuant to EDGX Rule 15.1(a) and (c).

All of the changes described herein are applicable to EDGX Members. The text of the proposed rule change is available on the Exchange's Internet Web site at *http://www.directedge.com.*

II. Self-Regulatory Organization's Statement of the Purpose of, and Statutory Basis for, the Proposed Rule Change

In its filing with the Commission, the self-regulatory organization included statements concerning the purpose of, and basis for, the proposed rule change and discussed any comments it received on the proposed rule change. The text of these statements may be examined at the places specified in Item IV below. The self-regulatory organization has prepared summaries, set forth in sections A, B and C below, of the most significant aspects of such statements.

A. Self-Regulatory Organization's Statement of the Purpose of, and Statutory Basis for, the Proposed Rule Change

1. Purpose

The Exchange's Mega Tier provides a rebate of $0.0032 per share for adding liquidity for securities priced at or above $1.00 and is incorporated in footnote 1 of the fee schedule. As provided in footnote 1, a Member can qualify for the Mega Tier rebate in one of two ways. The first way by which Members can qualify for the Mega Tier rebate is if they add or route at least 5,000,000 shares of average daily volume prior to 9:30 a.m. or after 4 p.m. (includes all flags except 6) AND add a minimum of 25,000,000 shares of average daily volume on EDGX in total. With respect to Members qualifying for the Mega Tier rebate pursuant to this first method, the Exchange proposes to add language to footnote 1 to state that such Members will pay a reduced rate for removing liquidity of $0.0029 per share for Flags N, W, and 6.

The Exchange believes that the above pricing is appropriate since higher rebates are directly correlated with more stringent criteria. The Mega Tier rebate

[1] 15 U.S.C. 78s(b)(1).

[2] 17 CFR 240.19b–4.

[3] A Member is any registered broker or dealer, or any person associated with a registered broker or dealer, that has been admitted to membership in the Exchange.

($ 0.0032 per share) has the most stringent criteria, and is $0.0001 greater than the Ultra Tier rebate ($0.0031 per share) and $0.0002 greater than the Super Tier rebate. ($0.0030 per share) For example, based on average TCV for September 2010 (7.2 billion), in order for a Member to qualify for the Mega Tier, the Member would have to post 54 million shares on EDGX. In order to qualify for the Ultra Tier, which has less stringent criteria than the Mega Tier, the Member would have to post 36 million shares on EDGX. Finally, the Super Tier has the least stringent criteria. In order for a Member to qualify for this rebate, the Member would have to post 10 million shares on EDGX. In addition, these rebates also result, in part, from lower administrative costs associated with higher volume.

In addition, conforming amendments have been made to place references to footnote "1" on Flags N, W, and 6 since this amendment qualifies these flags by proposing an exception to the $0.0030 per share charge for each flag. A reference to footnote 1 has also been placed on the $0.0030 per share default rate for removing liquidity at the table on the top of the fee schedule to signify this exception.

EDGX Exchange proposes to implement these amendments to the Exchange fee schedule on November 1, 2010.

2. Statutory Basis

The Exchange believes that the proposed rule change is consistent with the objectives of Section 6 of the Act,[4] in general, and furthers the objectives of Section 6(b)(4),[5] in particular, as it is designed to provide for the equitable allocation of reasonable dues, fees and other charges among its members and other persons using its facilities. The Exchange notes that it operates in a highly competitive market in which market participants can readily direct order flow to competing venues if they deem fee levels at a particular venue to be excessive. The proposed rule change reflects a competitive pricing structure designed to incent market participants to direct their order flow to the Exchange. Finally, the Exchange believes that the proposed rates are equitable in that they apply uniformly to all Members. The Exchange believes the fees and credits remain competitive with those charged by other venues and therefore continue to be reasonable and equitably allocated to Members.

B. Self-Regulatory Organization's Statement on Burden on Competition

The proposed rule change does not impose any burden on competition that is not necessary or appropriate in furtherance of the purposes of the Act.

C. Self-Regulatory Organization's Statement on Comments on the Proposed Rule Change Received From Members, Participants or Others

The Exchange has not solicited, and does not intend to solicit, comments on this proposed rule change. The Exchange has not received any unsolicited written comments from members or other interested parties.

III. Date of Effectiveness of the Proposed Rule Change and Timing for Commission Action

The foregoing rule change has become effective pursuant to Section 19(b)(3) of the Act[6] and Rule 19b–4(f)(2)[7] thereunder. At any time within 60 days of the filing of such proposed rule change, the Commission summarily may temporarily suspend such rule change if it appears to the Commission that such action is necessary or appropriate in the public interest, for the protection of investors, or otherwise in furtherance of the purposes of the Act.

IV. Solicitation of Comments

Interested persons are invited to submit written data, views, and arguments concerning the foregoing, including whether the proposed rule change is consistent with the Act. Comments may be submitted by any of the following methods:

Electronic Comments

- Use the Commission's Internet comment form (*http://www.sec.gov/rules/sro.shtml*); or
- Send an e-mail to *rule-comments@sec.gov*. Please include File Number SR–EDGX–2010–16 on the subject line.

Paper Comments

- Send paper comments in triplicate to Elizabeth M. Murphy, Secretary, Securities and Exchange Commission, 100 F Street, NE., Washington, DC 20549–1090.

All submissions should refer to File Number SR–EDGX–2010–16. This file number should be included on the subject line if e-mail is used. To help the Commission process and review your comments more efficiently, please use only one method. The Commission will post all comments on the Commission's Internet Web site (*http://www.sec.gov/rules/sro.shtml*). Copies of the submission,[8] all subsequent amendments, all written statements with respect to the proposed rule change that are filed with the Commission, and all written communications relating to the proposed rule change between the Commission and any person, other than those that may be withheld from the public in accordance with the provisions of 5 U.S.C. 552, will be available for Web site viewing and printing in the Commission's Public Reference Room, 100 F Street, NE., Washington, DC 20549, on official business days between the hours of 10 a.m. and 3 p.m. Copies of the filing also will be available for inspection and copying at the principal office of the Exchange. All comments received will be posted without change; the Commission does not edit personal identifying information from submissions. You should submit only information that you wish to make available publicly. All submissions should refer to File Number SR–EDGX–2010–16 and should be submitted on or before November 29, 2010.

For the Commission, by the Division of Trading and Markets, pursuant to delegated authority.[9]

Florence E. Harmon,

Deputy Secretary.

[FR Doc. 2010–28181 Filed 11–5–10; 8:45 am]

BILLING CODE 8011–01–P

[4] 15 U.S.C. 78f.

[5] 15 U.S.C. 78f(b)(4).

[6] 15 U.S.C. 78s(b)(3)(A).

[7] 17 CFR 19b–4(f)(2).

[8] The text of the proposed rule change is available on the Exchange's Web site at *http://www.directedge.com*, on the Commission's Web site at *http://www.sec.gov*, at EDGX, and at the Commission's Public Reference Room.

[9] 17 CFR 200.30–3(a)(12).

DEPARTMENT OF TRANSPORTATION

Maritime Administration

[Docket No. MARAD 2010 0097]

Buy America Waiver Notification

AGENCY: Maritime Administration, DOT.

ACTION: Notice and Request for Comments.

SUMMARY: This notice provides information regarding the Maritime Administration's (MarAd) finding that a Buy American waiver, stated in 23 U.S.C. 313, is appropriate for the purchase of foreign Mobile Harbor Cranes in the Federal-aid/American Recovery and Reinvestment Act of 2009 (ARRA) for the Port of Searsport, Port of Stockton, Port of West Sacramento and the Port of Davisville via the Quonset

Development Corporation. The waivers for each of these projects involve specific items that are not produced in the United States and deemed necessary for the construction of the project. MarAd has reached out to the steel industry and solicited public comments on the domestic availability of these items. No domestic manufacturers have been located.

DATES: The effective date of the waiver is November 9, 2010. Comments may be submitted up to 15 days after publication.

FOR FURTHER INFORMATION CONTACT: Anthony Shuler Jr., Office of Infrastructure Development and Congestion Mitigation, Maritime Administration, MAR–510, 1200 New Jersey Ave., SE., Washington, DC 20590. Telephone: (202) 366–6639, or via e-mail at *Anthony.L.Shuler@dot.gov*. For legal questions, you may contact Murray Bloom, Chief, Division of Maritime Programs, Office of the Chief Counsel, Maritime Administration, MAR–222, 1200 New Jersey Ave., SE., Washington, DC 20590. Telephone: (202) 366–5320, or via e-mail at *Murray.Bloom@dot.gov.* Office hours are from 8:30 a.m. to 5 p.m., Monday through Friday, except Federal holidays.

SUPPLEMENTARY INFORMATION:

Electronic Access

An electronic copy of this document may be downloaded from the **Federal Register's** home page at: *http://www.archives.gov/federal-register/* and at *http://www.regulations.gov.*

Background

Congress has enacted a Buy American provision which requires manufactured goods permanently incorporated into a project funded with Federal-aid funds to be produced in the United States. The application of Buy American is triggered by the obligation of Federal funds to a project. Once Federal-aid funds are obligated to a project, then all steel and iron incorporated into the project must be produced in the United States. The specific statutory requirement reads as follows:

> Notwithstanding any other provision of law, the Secretary of Transportation shall not obligate any funds authorized to be appropriated to carry out the Surface Transportation Assistance Act of 1982 (Pub. L. 97–424) or this title and administered by the Department of Transportation, unless steel, iron, and manufactured products used in such project are produced in the United States.

23 U.S.C. 313(a)

Under 23 U.S.C. 313(b), the Secretary may waive the Buy American requirements for specific products on a Federal-aid construction project when, Buy American is inconsistent with the public interest; such materials and products are not produced in the United States in sufficient and reasonably available quantities and of satisfactory quality; or inclusion of domestic material will increase the cost of the overall project contract by more than 25 percent.

The waiver process is initiated by a requesting organization when it believes that a waiver is Warranted pursuant to any of the three waiver provisions under 23 U.S.C. 313(b). Pursuant to Division A, Section 123 of the Consolidated Appropriations Act, 2010 (Pub. L. 111–117), MarAd is required to provide an informal public notice and comment opportunity for a period of 15 days for all waiver requests. MarAd complied with this informal public notice and comment requirement through the establishment of a dedicated Web site for Buy America waiver requests. The Web site MarAd established for this purpose is located at the following address: *http://www.marad.dot.gov.* The waiver notification postings solicited public comments on the intent to issue a waiver for a 15-day period, and all comments received within the 15 day comment period were evaluated and potential domestic sources were verified. During the 15-day comment period, MarAd conducted additional nationwide reviews by coordinating the waiver requests with appropriate industry associations and other potential domestic manufacturers. Following this comment period, and after MarAd's evaluation of the comments and coordination with the industry associations and potential manufacturers, MarAd developed findings and justifications for the waiver and publishes this decision in the **Federal Register**. MarAd's publication of its Buy American decision is required pursuant to the Buy American Act, 2 CFR 176.80(b)(2). The specific statutory requirement reads as follows:

> The head of the Federal department or agency shall publish a notice in the **Federal Register** within two weeks after the determination is made, unless the item has already been determined to be domestically non-available. A list of items that are not domestically available is at 48 CFR 25.104(a). The **Federal Register** notice or information from the notice may be posted by OMB to Recovery.gov. The notice shall include — (i) The title "Buy American Exception under the American Recovery and Reinvestment Act of 2009"; (ii) The dollar value and brief description of the project; and (iii) A detailed written justification as to why the restriction is being waived.

2 CFR 176.80(b)(2)

Upon publication of this **Federal Register** notice, the public is afforded an opportunity to submit additional comments on this finding to MarAd's Web site for 15 days following the effective date of the finding.

Authority: 2 CFR 176.80(b)(2), 48 CFR 25.104(a).

Dated: November 2, 2010.

By Order of the Maritime Administrator

Murray Bloom,

Acting Secretary, Maritime Administration.

[FR Doc. 2010–28143 Filed 11–5–10; 8:45 am]

BILLING CODE 4910–81–P

DEPARTMENT OF TRANSPORTATION

Federal Highway Administration

Environmental Impact Statement: St. Louis County, MO

AGENCY: Federal Highway Administration (FHWA), DOT.

ACTION: Notice of Intent.

SUMMARY: The FHWA is issuing this notice to advise the public that an environmental impact statement (EIS) will be prepared for a proposed highway project generally from the vicinity of Laclede Station Road and Hanley Road southeastward to River Des Peres Boulevard and Lansdowne Avenue in St. Louis County, Missouri.

FOR FURTHER INFORMATION CONTACT: Ms. Peggy J. Casey, Program Development Team Leader, FHWA Division Office, 3220 West Edgewood, Suite H, Jefferson City, MO 65109, Telephone: (573) 636–7104; or Mr. Kevin Keith, Interim Director, Missouri Department of Transportation, P.O. Box 270, Jefferson City, MO 65102, Telephone: (573) 751–2803. Questions may also be directed to the Local Public Agency sponsor by contacting: Mr. John Hicks, Transportation Development Analyst, St. Louis County Department of Highways and Traffic, 121 S. Meramec Avenue, Clayton, Missouri 63105, Telephone: (314) 615–8532.

SUPPLEMENTARY INFORMATION: The FHWA, in cooperation with the Missouri Department of Transportation (MoDOT) and St Louis County Department of Highways and Traffic (County), will prepare an EIS for a proposed roadway project in St. Louis County, Missouri. The project corridor begins in the vicinity of Laclede Station Road and Hanley Road, extending from the vicinity of Laclede Station Road and Hanley Road, extending southeastward to River Des Peres Boulevard and Lansdowne Avenue near the

Shrewsbury MetroLink station. A location study will run concurrently with the preparation of the EIS and will provide definitive alternatives for evaluation in the EIS. The project is intended to provide additional access and improved connectivity between south St. Louis County and central St. Louis County, and to Interstates 44, 64, 55, and 170.

The needs for the proposed action include: (1) Roadway connectivity, (2) congestion, (3) roadway capacity, and (4) safety. The project study area is generally bounded by Manchester Road to the north, Hanley Road and Laclede Station Road to I–44 to the west, Murdoch Avenue and Watson Road to the south, and Big Bend Boulevard and River Des Peres on the east. The corridor is centered on the intersection of Laclede Station Road and Hanley Road. The corridor extends southeastward, generally parallel to Deer Creek, to River Des Peres Boulevard in the vicinity of Lansdowne Avenue in the City of St. Louis and in close proximity to the Shrewsbury MetroLink station. The study area is approximately two miles in length and one-half mile in width.

Alternatives under consideration include (1) Taking no action; (2) implementing transportation system management options; and (3) build alternatives. The evaluation of build alternatives will include a full interchange between the proposed build alternatives and Interstate 44, as applicable.

As part of the project scoping process, interagency coordination meeting(s) will be held with all appropriate Federal, State, and local agencies having jurisdiction or having specific expertise with respect to any environmental impacts associated with the proposed improvements. Agencies with jurisdiction by law will be asked to become cooperating agencies. Other agencies with interest in the project will be invited to become participating agencies. In addition, an open house public scoping meeting (the initial public meeting) will be held to solicit input from the public and to identify issues to be addressed in the EIS. The public scoping meeting is scheduled for Thursday, December 9, 2010 from 3 p.m. until 7 p.m. at the Affton White-Rodgers Community Center, located at 9801 Mackenzie Road, St. Louis, Missouri 63123. Coordination will continue throughout the study as an ongoing process, including public information meetings and further meetings with community officials to solicit public and agency input.

A location public hearing will be held to present the findings of the draft EIS (DEIS). Public notice will be given announcing the time and place of all public meetings and the public hearing. The DEIS will be available for public and agency review and comment prior to the public hearing. To ensure that the full range of issues related to this proposed action is addressed and all significant issues are identified, comments and suggestions are invited from all interested parties. Comments or questions concerning this proposed action and the EIS should be directed to the FHWA or MoDOT at the addresses provided above. Concerns in the study are primarily related to potential impacts to residences, cultural resources, and neighborhoods in the study area.

(Catalog of Federal Domestic Assistance Program Number 20.205, Highway Planning and Construction. The regulations implementing Executive Order 12372 regarding intergovernmental consultation on Federal programs and activities apply to this program.)

Issued on: November 2, 2010.

Peggy J. Casey,

Program Development Team Leader, Jefferson City.

[FR Doc. 2010–28159 Filed 11–5–10; 8:45 am]

BILLING CODE 4910–22–P

DEPARTMENT OF TRANSPORTATION

National Highway Traffic Safety Administration

[Docket No. NHTSA–2010–0150]

Federal Motor Vehicle Safety Standards; Rear Impact Guards; Rear Impact Protection; Technical Report, on the Effectiveness of Underride Guards for Heavy Trailers

AGENCY: National Highway Traffic Safety Administration (NHTSA), Department of Transportation.

ACTION: Request for comments on technical report.

SUMMARY: This notice announces NHTSA's publication of a Technical Report, its existing Safety Standard 223, *Rear Impact Guards and Safety Standard 224, Rear Impact Protection.* The report's title is: *The Effectiveness of Underride Guards for Heavy Trailers.*

DATES: Comments must be received no later than March 8, 2011.

ADDRESSES:

Report: The technical report is available on the Internet for viewing in PDF format at *http://www-nrd.nhtsa.dot.gov/Pubs/811375.pdf.* You may obtain a copy of the report free of charge by sending a self-addressed mailing label to Charles J. Kahane (NVS–431), National Highway Traffic Safety Administration, Room W53–312, 1200 New Jersey Avenue, SE., Washington, DC 20590.

Comments: You may submit comments [identified by Docket Number NHTSA–2010–0150] by any of the following methods:

- *Federal eRulemaking Portal:* Go to *http://www.regulations.gov.* Follow the online instructions for submitting comments.
- *Fax:* 1–202–493–2251.
- *Mail:* Docket Management Facility, M–30, U.S. Department of Transportation, West Building, Ground Floor, Rm. W12–140, 1200 New Jersey Avenue, SE., Washington, DC 20590.
- *Hand Delivery:* West Building Ground Floor, Room W12–140, 1200 New Jersey Avenue, SE., between 9 a.m. and 5 p.m. Eastern Time, Monday through Friday, except Federal holidays.

You may call Docket Management at 202–366–9826.

Instructions: For detailed instructions on submitting comments, *see* the Procedural Matters section of this document. Note that all comments received will be posted without change to *http://www.regulations.gov*, including any personal information provided.

FOR FURTHER INFORMATION CONTACT: Charles J. Kahane, Chief, Evaluation Division, NVS–431, National Center for Statistics and Analysis, National Highway Traffic Safety Administration, Room W53–312, 1200 New Jersey Avenue, SE., Washington, DC 20590. Telephone: 202–366–2560. E-mail: *chuck.kahane@dot.gov.*

For information about NHTSA's evaluations of the effectiveness of existing regulations and programs: You may see a list of published evaluation reports at *http://www-nrd.nhtsa.dot.gov/cats/listpublications.aspx?Id=226&ShowBy=Category* and if you click on any report you will be able to view it in PDF format.

SUPPLEMENTARY INFORMATION: Safety Standards 223 (49 CFR 571.223) and 224 (49 CFR 571.224) require underride guards meeting a strength test on trailers with a GVWR of 10,000 pounds or greater manufactured on or after January 24, 1998. Safety Standard 224 defines the size requirements for the guards, while Safety Standard 223 describes strength testing and energy absorption requirements for DOT-compliant guards. This report is a statistical analysis of crash data aimed at determining the effectiveness of standard-compliant underride guards at preventing fatalities and serious injuries in crashes where a passenger vehicle impacts the rear of a

tractor-trailer. The primary findings are the following:

• Data from Florida and North Carolina showed decreases in fatalities and serious injuries to passenger vehicle occupants when rear-ending a tractor-trailer subsequent to the implementation of Safety Standards 223 and 224. However, the observed decreases are not statistically significant at the 0.05 level, possibly due to the small sample sizes of the data.

• Using supplemental data collection from North Carolina, it is shown that passenger vehicle passenger compartment intrusion is more apt to occur when the corner of the trailer is impacted, rather than the center of the trailer. This result is statistically significant at the 0.01 level.

• It is not possible to establish a nationwide downward trend in fatalities when a passenger vehicle rear-ends a tractor-trailer—neither in terms of total number of fatalities, percentage of fatalities in rear impacts relative to other passenger vehicle fatalities involved in tractor-trailer accidents, nor number of fatal crashes per 1,000 total crashes. The Fatality Accident Reporting System does not list the model year of the trailer.

In April 2009, NHTSA issued *An In-Service Analysis of Maintenance and Repair Expenses for the Anti-Lock Brake System and Underride Guard for Tractors and Trailers* (74 FR 18803).

Procedural Matters

How can I influence NHTSA's thinking on this subject?

NHTSA welcomes public review of the technical report. NHTSA will submit to the Docket a response to the comments and, if appropriate, will supplement or revise the report.

How do I prepare and submit comments?

Your comments must be written and in English. To ensure that your comments are correctly filed in the Docket, please include the Docket number of this document (NHTSA–2010–0150) in your comments.

Your primary comments must not be more than 15 pages long (49 CFR 553.21). However, you may attach additional documents to your primary comments. There is no limit on the length of the attachments.

Anyone is able to search the electronic form of all comments received into any of our dockets by the name of the individual submitting the comment (or signing the comment, if submitted on behalf of an association, business, labor union, etc.). You may review DOT's complete Privacy Act Statement in the **Federal Register** published on April 11, 2000 (65 FR 19477) or you may visit *http://www.regulations.gov.*

Please send two paper copies of your comments to Docket Management, fax them, or use the Federal eRulemaking Portal. The mailing address is U.S. Department of Transportation, Docket Management Facility, M–30, West Building, Ground Floor, Rm. W12–140, 1200 New Jersey Avenue, SE., Washington, DC 20590. The fax number is 1–202–493–2251. To use the Federal eRulemaking Portal, go to *http://www.regulations.gov* and follow the online instructions for submitting comments.

We also request, but do not require you to send a copy to Charles J. Kahane, Chief, Evaluation Division, NVS–431, National Highway Traffic Safety Administration, Room W53–312, 1200 New Jersey Avenue, SE., Washington, DC 20590 (or e-mail them to *chuck.kahane@dot.gov*). He can check if your comments have been received at the Docket and he can expedite their review by NHTSA.

How can I be sure that my comments were received?

If you wish Docket Management to notify you upon its receipt of your comments, enclose a self-addressed, stamped postcard in the envelope containing your comments. Upon receiving your comments, Docket Management will return the postcard by mail.

How do I submit confidential business information?

If you wish to submit any information under a claim of confidentiality, send three copies of your complete submission, including the information you claim to be confidential business information, to the Chief Counsel, National Highway Traffic Safety Administration, 1200 New Jersey Avenue, SE., Washington, DC 20590. Include a cover letter supplying the information specified in our confidential business information regulation (49 CFR Part 512).

In addition, send two copies from which you have deleted the claimed confidential business information to U.S. Department of Transportation, Docket Management Facility, M–30, West Building, Ground Floor, Rm. W12–140, 1200 New Jersey Avenue, SE., Washington, DC 20590, or submit them via the Federal eRulemaking Portal.

Will the agency consider late comments?

In our response, we will consider all comments that Docket Management receives before the close of business on the comment closing date indicated above under **DATES**. To the extent possible, we will also consider comments that Docket Management receives after that date.

Please note that even after the comment closing date, we will continue to file relevant information in the Docket as it becomes available. Further, some people may submit late comments. Accordingly, we recommend that you periodically check the Docket for new material.

How can I read the comments submitted by other people?

You may read the materials placed in the docket for this document (*e.g.,* the comments submitted in response to this document by other interested persons) at any time by going to *http://www.regulations.gov.* Follow the online instructions for accessing the dockets. You may also read the materials at the Docket Management Facility by going to the street address given above under **ADDRESSES**. The Docket Management Facility is open between 9 a.m. and 5 p.m. Eastern Time, Monday through Friday, except Federal holidays.

Authority: 49 U.S.C. 30111, 30168; delegation of authority at 49 CFR 1.50 and 501.8.

James F. Simons,

Director, Office of Regulatory Analysis and Evaluation.

[FR Doc. 2010–28111 Filed 11–5–10; 8:45 am]

BILLING CODE 4910–59–P

DEPARTMENT OF TRANSPORTATION

National Highway Traffic Safety Administration

[Docket No. NHTSA–2010–0145]

Federal Motor Vehicle Safety Standards; Child Restraint Systems; Booster Seat Effectiveness Estimates Based on CDS and State Data

AGENCY: National Highway Traffic Safety Administration (NHTSA), Department of Transportation.

ACTION: Request for comments on technical report.

SUMMARY: This notice announces NHTSA's publication of a Technical Report on its existing Safety Standard 213, *Child Restraint Systems.* The report's title is: *Booster Seat*

Effectiveness Estimates Based on CDS and State Data.

DATES: Comments must be received no later than March 8, 2011.

ADDRESSES: *Report:* The technical report is available on the Internet for viewing in PDF format at *http://www-nrd.nhtsa.dot.gov/Pubs/811338.pdf*. You may obtain a copy of the report free of charge by sending a self-addressed mailing label to Robert Sivinski (NVS–431), National Highway Traffic Safety Administration, Room W53–440, 1200 New Jersey Avenue, SE., Washington, DC 20590.

Comments: You may submit comments [identified by Docket Number NHTSA–2010–0145] by any of the following methods:

- *Federal eRulemaking Portal:* Go to *http://www.regulations.gov*. Follow the online instructions for submitting comments.
- *Fax:* 1–202–493–2251.
- *Mail:* Docket Management Facility, M–30, U.S. Department of Transportation, West Building, Ground Floor, Rm. W12–140, 1200 New Jersey Avenue, SE., Washington, DC 20590.
- *Hand Delivery:* West Building Ground Floor, Room W12–140, 1200 New Jersey Avenue, SE., between 9 a.m. and 5 p.m. Eastern Time, Monday through Friday, except Federal holidays.

You may call Docket Management at 202–366–9826.

Instructions: For detailed instructions on submitting comments, see the Procedural Matters section of this document. Note that all comments received will be posted without change to *http://www.regulations.gov*, including any personal information provided.

FOR FURTHER INFORMATION CONTACT: Bob Sivinski, Statistician, Evaluation Division, NVS–431, National Center for Statistics and Analysis, National Highway Traffic Safety Administration, Room W53–312, 1200 New Jersey Avenue, SE., Washington, DC 20590. Telephone: 202–366–2570. E-mail: *robert.sivinski@dot.gov*.

For information about NHTSA's evaluations of the effectiveness of existing regulations and programs: You may see a list of published evaluation reports at *http://www-nrd.nhtsa.dot.gov/cats/listpublications.aspx?Id=226&ShowBy=Category* and if you click on any report you will be able to view it in PDF format.

SUPPLEMENTARY INFORMATION: Safety Standard 213 (49 CFR 571.213) establishes standards for child restraint systems, including booster seats, manufactured for use in motor vehicles as well as aircraft. This report uses CDS data from 1998–2008 and 17 combined years of State data from Kansas, Washington and Nebraska to estimate the effects of early graduation from child restraint seats to booster seats and of early graduation from booster seats to lap and shoulder belts. Estimates are computed by double-pair comparison, a method uniquely suited to address the confounding variables which may bias results and are difficult or impossible to account for with other statistical methods.

The principal findings are that among 3–4-year-olds there is evidence of increased risk of injury when restrained in booster seats rather than the recommended child restraint seats. This effect may be more pronounced in the 3-year-olds. Among 4–8-year-olds there is strong evidence of increased risk of injury when restrained by lap and shoulder belts rather than the recommended booster seats. The magnitude of this effect is estimated at a 14% increase in risk of any type of injury, but may vary depending on data source and injury severity.

Procedural Matters:

How can I influence NHTSA's thinking on this subject?

NHTSA welcomes public review of the technical report. NHTSA will submit to the Docket a response to the comments and, if appropriate, will supplement or revise the report.

How do I prepare and submit comments?

Your comments must be written and in English. To ensure that your comments are correctly filed in the Docket, please include the Docket number of this document (NHTSA–2010–0145) in your comments.

Your primary comments must not be more than 15 pages long (49 CFR 553.21). However, you may attach additional documents to your primary comments. There is no limit on the length of the attachments.

Anyone is able to search the electronic form of all comments received into any of our dockets by the name of the individual submitting the comment (or signing the comment, if submitted on behalf of an association, business, labor union, *etc.*). You may review DOT's complete Privacy Act Statement in the **Federal Register** published on April 11, 2000 (65 FR 19477) or you may visit *http://www.regulations.gov*.

Please send two paper copies of your comments to Docket Management, fax them, or use the Federal eRulemaking Portal. The mailing address is U. S. Department of Transportation, Docket Management Facility, M–30, West Building, Ground Floor, Rm. W12–140, 1200 New Jersey Avenue, SE., Washington, DC 20590. The fax number is 1–202–493–2251. To use the Federal eRulemaking Portal, go to *http://www.regulations.gov* and follow the online instructions for submitting comments.

We also request, but do not require you to send a copy to Bob Sivinski, Statistician, Evaluation Division, NVS–431, National Highway Traffic Safety Administration, Room W53–440, 1200 New Jersey Avenue, SE., Washington, DC 20590 (or e-mail them to *robert.sivinski@dot.gov*). He can check if your comments have been received at the Docket and he can expedite their review by NHTSA.

How can I be sure that my comments were received?

If you wish Docket Management to notify you upon its receipt of your comments, enclose a self-addressed, stamped postcard in the envelope containing your comments. Upon receiving your comments, Docket Management will return the postcard by mail.

How do I submit confidential business information?

If you wish to submit any information under a claim of confidentiality, send three copies of your complete submission, including the information you claim to be confidential business information, to the Chief Counsel, National Highway Traffic Safety Administration, 1200 New Jersey Avenue, SE., Washington, DC 20590. Include a cover letter supplying the information specified in our confidential business information regulation (49 CFR part 512).

In addition, send two copies from which you have deleted the claimed confidential business information to U. S. Department of Transportation, Docket Management Facility, M–30, West Building, Ground Floor, Rm. W12–140, 1200 New Jersey Avenue, SE., Washington, DC 20590, or submit them via the Federal eRulemaking Portal.

Will the agency consider late comments?

In our response, we will consider all comments that Docket Management receives before the close of business on the comment closing date indicated above under **DATES**. To the extent possible, we will also consider comments that Docket Management receives after that date.

Please note that even after the comment closing date, we will continue to file relevant information in the

Docket as it becomes available. Further, some people may submit late comments. Accordingly, we recommend that you periodically check the Docket for new material.

How can I read the comments submitted by other people?

You may read the materials placed in the docket for this document (*e.g.,* the comments submitted in response to this document by other interested persons) at any time by going to *http://www.regulations.gov.* Follow the online instructions for accessing the dockets. You may also read the materials at the Docket Management Facility by going to the street address given above under **ADDRESSES.** The Docket Management Facility is open between 9 a.m. and 5 p.m. Eastern Time, Monday through Friday, except Federal holidays.

Authority: 49 U.S.C. 30111, 30168; delegation of authority at 49 CFR 1.50 and 501.8.

James F. Simons,

Director, Office of Regulatory Analysis and Evaluation.

[FR Doc. 2010–28112 Filed 11–5–10; 8:45 am]

BILLING CODE 4910–59–P

DEPARTMENT OF TRANSPORTATION

Federal Aviation Administration

[Summary Notice No. PE–2010–50]

Petition for Exemption; Summary of Petition Received

AGENCY: Federal Aviation Administration (FAA), DOT.

ACTION: Notice of petition for exemption received.

SUMMARY: This notice contains a summary of a petition seeking relief from specified requirements of 14 CFR. The purpose of this notice is to improve the public's awareness of, and participation in, this aspect of FAA's regulatory activities. Neither publication of this notice nor the inclusion or omission of information in the summary is intended to affect the legal status of the petition or its final disposition.

DATES: Comments on this petition must identify the petition docket number involved and must be received on or before November 29, 2010.

ADDRESSES: You may send comments identified by Docket Number FAA–2002–13021 using any of the following methods:

- *Government-wide rulemaking Web site:* Go to *http://www.regulations.gov* and follow the instructions for sending your comments electronically.
- *Mail:* Send comments to the Docket Management Facility; U.S. Department of Transportation, 1200 New Jersey Avenue, SE., West Building Ground Floor, Room W12–140, Washington, DC 20590.
- *Fax:* Fax comments to the Docket Management Facility at 202–493–2251.
- *Hand Delivery:* Bring comments to the Docket Management Facility in Room W12–140 of the West Building Ground Floor at 1200 New Jersey Avenue, SE., Washington, DC, between 9 a.m. and 5 p.m., Monday through Friday, except Federal holidays.

Privacy: We will post all comments we receive, without change, to *http://www.regulations.gov,* including any personal information you provide. Using the search function of our docket Web site, anyone can find and read the comments received into any of our dockets, including the name of the individual sending the comment (or signing the comment for an association, business, labor union, etc.). You may review DOT's complete Privacy Act Statement in the **Federal Register** published on April 11, 2000 (65 FR 19477–78).

Docket: To read background documents or comments received, go to *http://www.regulations.gov* at any time or to the Docket Management Facility in Room W12–140 of the West Building Ground Floor at 1200 New Jersey Avenue, SE., Washington, DC, between 9 a.m. and 5 p.m., Monday through Friday, except Federal holidays.

FOR FURTHER INFORMATION CONTACT: Mark Forseth, ANM–113, (425) 227–2796, Federal Aviation Administration, 1601 Lind Avenue, SW., Renton, WA 98057–3356, or Katherine Haley, (202) 493–5708, Office of Rulemaking (ARM–203), Federal Aviation Administration, 800 Independence Avenue, SW., Washington, DC 20591.

This notice is published pursuant to 14 CFR 11.85.

Issued in Washington, DC, on November 3, 2010.

Pamela Hamilton-Powell,

Director, Office of Rulemaking.

Petition for Exemption

Docket No.: FAA–2002–13021.

Petitioner: Embraer.

Section of 14 CFR Affected: 14 CFR 25.901(c).

Description of Relief Sought: Embraer requests an amendment to Exemption No. 7933. The amendment would provide relief from the no-single-failure requirements as they relate to uncontrollable, high-thrust failure conditions on Embraer Model EMB–135BJ Enhanced (Legacy 650) airplanes equipped with AE3007A2 engines.

[FR Doc. 2010–28146 Filed 11–5–10; 8:45 am]

BILLING CODE 4910–13–P

DEPARTMENT OF TRANSPORTATION

Federal Aviation Administration

[Summary Notice No. PE–2010–48]

Petition for Exemption; Summary of Petition Received

AGENCY: Federal Aviation Administration (FAA), DOT.

ACTION: Notice of petition for exemption received.

SUMMARY: This notice contains a summary of a petition seeking relief from specified requirements of 14 CFR. The purpose of this notice is to improve the public's awareness of, and participation in, this aspect of FAA's regulatory activities. Neither publication of this notice nor the inclusion or omission of information in the summary is intended to affect the legal status of the petition or its final disposition.

DATES: Comments on this petition must identify the petition docket number involved and must be received on or before November 29, 2010.

ADDRESSES: You may send comments identified by Docket Number FAA–2010–1017 using any of the following methods:

- *Government-wide rulemaking Web site:* Go to *http://www.regulations.gov* and follow the instructions for sending your comments electronically.
- *Mail:* Send comments to the Docket Management Facility; U.S. Department of Transportation, 1200 New Jersey Avenue, SE., West Building Ground Floor, Room W12–140, Washington, DC 20590.
- *Fax:* Fax comments to the Docket Management Facility at 202–493–2251.
- *Hand Delivery:* Bring comments to the Docket Management Facility in Room W12–140 of the West Building Ground Floor at 1200 New Jersey Avenue, SE., Washington, DC, between 9 a.m. and 5 p.m., Monday through Friday, except Federal holidays.

Privacy: We will post all comments we receive, without change, to *http://www.regulations.gov*, including any personal information you provide. Using the search function of our docket Web site, anyone can find and read the comments received into any of our dockets, including the name of the individual sending the comment (or signing the comment for an association, business, labor union, etc.). You may

review DOT's complete Privacy Act Statement in the **Federal Register** published on April 11, 2000 (65 FR 19477–78).

Docket: To read background documents or comments received, go to *http://www.regulations.gov* at any time or to the Docket Management Facility in Room W12–140 of the West Building Ground Floor at 1200 New Jersey Avenue, SE., Washington, DC, between 9 a.m. and 5 p.m., Monday through Friday, except Federal holidays.

FOR FURTHER INFORMATION CONTACT: Kenna Sinclair, ANM–113, (425) 227–1556, Federal Aviation Administration, 1601 Lind Avenue, SW., Renton, WA 98057–3356, or Katherine Haley, (202–263–5708) Office of Rulemaking (ARM–1), Federal Aviation Administration, 800 Independence Avenue, SW., Washington, DC 20591.

This notice is published pursuant to 14 CFR 11.85.

Issued in Washington, DC on November 3, 2010.

Pamela Hamilton-Powell,

Director, Office of Rulemaking.

Petition for Exemption

Docket No.: FAA–2010–1017.

Petitioner: The Boeing Company.

Section of 14 CFR Affected: 14 CFR 25.1309(c).

Boeing requests relief from the requirement to provide indication to the flightcrew of anticipated fuel system contamination for Rolls Royce Trent 1000 powered B–787–8 airplanes. The exemption would enable Boeing to continue delivery of these airplanes through June 30, 2014, without meeting these requirements and retrofit the airplanes by December 31, 2018.

[FR Doc. 2010–28157 Filed 11–5–10; 8:45 am]

BILLING CODE 4910–13–P

DEPARTMENT OF TRANSPORTATION

Federal Aviation Administration

[Summary Notice No. PE–2010–49]

Petition for Exemption; Summary of Petition Received

AGENCY: Federal Aviation Administration (FAA), DOT.

ACTION: Notice of petition for exemption received.

SUMMARY: This notice contains a summary of a petition seeking relief from specified requirements of Title 14. The purpose of this notice is to improve the public's awareness of, and participation in, this aspect of FAA's regulatory activities. Neither publication of this notice nor the inclusion or omission of information in the summary is intended to affect the legal status of the petition or its final disposition.

DATES: Comments on this petition must identify the petition docket number involved and must be received on or before November 29, 2010.

ADDRESSES: You may send comments identified by Docket Number FAA–2008–0433 using any of the following methods:

- *Government-wide rulemaking Web site:* Go to *http://www.regulations.gov* and follow the instructions for sending your comments electronically.
- *Mail:* Send comments to the Docket Management Facility; U.S. Department of Transportation, 1200 New Jersey Avenue, SE., West Building Ground Floor, Room W12–140, Washington, DC 20590.
- *Fax:* Fax comments to the Docket Management Facility at 202–493–2251.
- *Hand Delivery:* Bring comments to the Docket Management Facility in Room W12–140 of the West Building Ground Floor at 1200 New Jersey Avenue, SE., Washington, DC, between 9 a.m. and 5 p.m., Monday through Friday, except Federal holidays.

Privacy: We will post all comments we receive, without change, to *http://www.regulations.gov*, including any personal information you provide. Using the search function of our docket Web site, anyone can find and read the comments received into any of our dockets, including the name of the individual sending the comment (or signing the comment for an association, business, labor union, etc.). You may review DOT's complete Privacy Act Statement in the **Federal Register** published on April 11, 2000 (65 FR 19477–78).

Docket: To read background documents or comments received, go to *http://www.regulations.gov* at any time or to the Docket Management Facility in Room W12–140 of the West Building Ground Floor at 1200 New Jersey Avenue, SE., Washington, DC, between 9 a.m. and 5 p.m., Monday through Friday, except Federal holidays.

FOR FURTHER INFORMATION CONTACT: Mr. Les Taylor; Small Airplane Directorate; Aircraft Certification Service; 901 Locust, Room 301; Kansas City, MO 64106; phone: (816) 329–4129; or Katherine Haley, ARM–203, Office of Rulemaking, Federal Aviation Administration, 800 Independence Avenue, SW., Washington, DC 20591; (202) 493–5708.

This notice is published pursuant to 14 CFR 11.85.

Issued in Washington, DC on November 2, 2010.

Pamela Hamilton-Powell,

Director, Office of Rulemaking.

Petition for Exemption

Docket No.: FAA–2008–0433.

Petitioner: Aviation Fabricators.

Section of 14 CFR Affected: 14 CFR 23.815.

Description of Relief Sought: Aviation Fabricators requests an exemption to permit them to install Beechcraft Aft Jump Seat Kits in Beechcraft model B300 aircraft with a wide back executive seat configuration. The revised configuration would increase seating in the aircraft to 10 or 11 passengers, without replacing the existing cabin seats with a narrower seat.

[FR Doc. 2010–28107 Filed 11–5–10; 8:45 am]

BILLING CODE 4910–13–P

DEPARTMENT OF TRANSPORTATION

Federal Aviation Administration

Receipt of Noise Compatibility Program and Request for Review for Kona International Airport at Keahole, Keahole, North Kona, HI

AGENCY: Federal Aviation Administration, DOT.

ACTION: Notice.

SUMMARY: The Federal Aviation Administration (FAA) announces that it is reviewing a proposed noise compatibility program that was submitted for Kona International Airport at Keahole under the provisions of 49 U.S.C. 47501 *et seq.* (the Aviation Safety and Noise Abatement Act, hereinafter referred to as "the Act") and 14 CFR part 150 by the State of Hawaii, Department of Transportation—Airports Division. This program was submitted subsequent to a determination by FAA that associated noise exposure maps submitted under 14 CFR part 150 for Kona International Airport at Keahole were in compliance with applicable requirements, effective January 12, 2010 (**Federal Register**/Volume 75/Number 15/Page 3959/January 25, 2010/Notices). The proposed noise compatibility program will be approved or disapproved on or before April 24, 2011.

DATES: *Effective Date:* The effective date of the start of FAA's review of the noise compatibility program is October 27, 2010. The public comment period ends December 27, 2010.

FOR FURTHER INFORMATION CONTACT: Mr. Steven Wong, Federal Aviation Administration, Honolulu Airports District Office, Box 50244 Honolulu,

Hawaii 96850–0001, Telephone: (808) 541–1224. Comments on the proposed noise compatibility program should also be submitted to the above office.

SUPPLEMENTARY INFORMATION: This notice announces that the FAA is reviewing a proposed noise compatibility program for Kona International Airport at Keahole which will be approved or disapproved on or before April 24, 2011. This notice also announces the availability of this program for public review and comment.

An airport operator who has submitted noise exposure maps that are found by FAA to be in compliance with the requirements of Federal Aviation Regulations (FAR) Part 150, promulgated pursuant to the Act, may submit a noise compatibility program for FAA approval which sets forth the measures the operator has taken or proposes to reduce existing non-compatible uses and prevent the introduction of additional non-compatible uses.

The FAA has formally received the noise compatibility program for Kona International Airport at Keahole, effective on October 27, 2010. The airport operator has requested that the FAA review this material and that the noise mitigation measures, to be implemented jointly by the airport and surrounding communities, be approved as a noise compatibility program under section 47504 of the Act. Preliminary review of the submitted material indicates that it conforms to FAR Part 150 requirements for the submittal of noise compatibility programs, but that further review will be necessary prior to approval or disapproval of the program. The formal review period, limited by law to a maximum of 180 days, will be completed on or before April 24, 2011.

The FAA's detailed evaluation will be conducted under the provisions of 14 CFR part 150, section 150.33. The primary considerations in the evaluation process are whether the proposed measures may reduce the level of aviation safety or create an undue burden on interstate or foreign commerce, and whether they are reasonably consistent with obtaining the goal of reducing existing non-compatible land uses and preventing the introduction of additional non-compatible land uses.

Interested persons are invited to comment on the proposed program with specific reference to these factors. All comments relating to these factors, other than those properly addressed to local land use authorities, will be considered by the FAA to the extent practicable.

Copies of the noise exposure maps and the proposed noise compatibility program are available for examination at the Web site, *http://www.kona-airport.com/resources.html* and at the following locations:

Federal Aviation Administration, Western-Pacific Region, Airports Division, Room 3012, 15000 Aviation Boulevard, Hawthorne, California 90261.

Federal Aviation Administration, Honolulu Airports District Office, 300 Ala Moana Boulevard, 7–128, Honolulu, Hawaii 96850.

State of Hawaii, Department of Transportation, Airports Division, 400 Rodgers Boulevard, Suite 700, Honolulu, Hawaii 96819–1880.

Kona International Airport at Keahole, 73–200 Kupipi Street, Kailua-Kona, Hawaii 96740–2645.

Questions may be directed to the individual named above under the heading, **FOR FURTHER INFORMATION CONTACT**.

Issued in Hawthorne, California on October 27, 2010.

Mark A. McClardy,

Manager, Airports Division, AWP–600, Western-Pacific Region.

[FR Doc. 2010–28093 Filed 11–5–10; 8:45 am]

BILLING CODE 4910–13–P

DEPARTMENT OF THE TREASURY

Senior Executive Service; Departmental Performance Review Board

AGENCY: Treasury Department.

ACTION: Notice of members of the Departmental Offices Performances Review Board.

SUMMARY: Pursuant to 5 U.S.C. 4314(c)(4), this notice announces the appointment of members of the Departmental Offices Performance Review Board (PRB). The purpose of this Board is to review and make recommendations concerning proposed performance appraisals, ratings, bonuses and other appropriate personnel actions for incumbents of SES positions in the Departmental Offices, excluding the Legal Division. The Board will perform PRB functions for other bureau positions if requested.

Composition of Departmental Offices PRB: The Board shall consist of at least three members. In the case of an appraisal of a career appointee, more than half the members shall consist of career appointees. The names and titles of the Board members are as follows:

Baukol, Andy P., Deputy Assistant Secretary for Mid-East and Africa.

Cavella, Charles J., Deputy Assistant Secretary for Security.

Coloretti, Nani Ann, Deputy Assistant Secretary for Management and Budget.

Dohner, Robert S., Deputy Assistant Secretary for South and East Asia.

Fitzpayne, Alistair M., Deputy Chief of Staff and Executive Secretary.

Gerardi, Geraldine, Director for Business and International Taxation.

Glaser, Daniel L., Deputy Assistant Secretary for Terrorist Financing and Financial Crimes.

Gregg, Richard L., Fiscal Assistant Secretary.

Grippo, Gary E., Deputy Assistant Secretary for Fiscal Operations and Policy.

Hammerle, Barbara C., Deputy Director, Office of Foreign Assets Control.

Hampl, Eric E., Director, Executive Office of Asset Forfeiture.

Harvey, Mariam G., Associate Chief Human Capital Officer for Civil Rights and Diversity.

Jaskowiak, Mark M., Deputy Assistant Secretary for Investment Security.

Klein, Aaron, Deputy Assistant Secretary for Policy Coordination.

Lee, Nancy, Deputy Assistant Secretary for Western Hemisphere.

Madon, Michael P., Deputy Assistant Secretary for Intelligence Community Integration.

Mazur, Mark J., Deputy Assistant Secretary for Tax Analysis.

McDonald, William L., Deputy Assistant Secretary for Technical Assistance Policy.

Mendelsohn, Howard S., Deputy Assistant Secretary for Intelligence & Analysis.

Ostrowski, Nancy, Director, Office of D.C. Pensions.

Pabotoy, Barbara, Associate Chief Human Capital Officer for Human Capital Services.

Patterson, Mark A., Chief of Staff.

Pizer, William A., Deputy Assistant Secretary for Environment and Energy.

Reger, Mark Anthony, Deputy Assistant Secretary for Accounting Policy.

Rutherford, Matthew S., Deputy Assistant Secretary for Federal Finance.

Shay, Stephen E., Deputy Assistant Secretary for International Tax Affairs.

Sobel, Mark D., Deputy Assistant Secretary for International Monetary and Financial Policy.

Szubin, Adam J., Director, Office of Foreign Assets Control.

Twohig, Peggy Lynn, Director, Office of Consumer Protection.

DATES: *Effective Date:* Membership is effective on the date of this notice.

FOR FURTHER INFORMATION CONTACT: Christine Nalli, Supervisory Human Resources Specialist, 1500 Pennsylvania Avenue, NW., ATTN: National Press Building, Room 200, Washington, DC 20220. Telephone: 202–622–1105.

This notice does not meet the Department's criteria for significant regulations.

Dated: October 22, 2010.

Kristina J. Kaptur,

Director, Office of Human Resources.

[FR Doc. 2010–28114 Filed 11–5–10; 8:45 am]

BILLING CODE 4811–42–P

DEPARTMENT OF THE TREASURY

Senior Executive Service; Departmental Performance Review Board

AGENCY: Treasury Department.

ACTION: Notice.

SUMMARY: Pursuant to 5 U.S.C. 4314(c)(4), this notice announces the appointment of members of the Departmental PRB. The purpose of this PRB is to review and make recommendations concerning proposed performance appraisals, ratings, bonuses and other appropriate personnel actions for incumbents of SES positions for which the Secretary or Deputy Secretary is the appointing authority. These positions include SES bureau heads, deputy bureau heads and certain other positions. The Board will perform PRB functions for other key bureau positions if requested.

Composition of Departmental PRB: The Board shall consist of at least three members. In the case of an appraisal of a career appointee, more than half the members shall consist of career appointees. The names and titles of the PRB members are as follows:

Daniel M. Tangherlini, Assistant Secretary for Management and Chief Financial Officer.

Nani Ann Coloretti, Deputy Assistant Secretary for Management and Budget.

Richard L. Gregg, Fiscal Assistant Secretary.

Christopher J. Meade, Principal Deputy General Counsel.

Steven T. Miller, Deputy Commissioner, Services and Enforcement, Internal Revenue Service.

John J. Manfreda, Administrator, Alcohol and Tobacco Tax and Trade Bureau.

Mary G. Ryan, Deputy Administrator, Alcohol and Tobacco Tax and Trade Bureau.

James H. Freis, Jr., Director, Financial Crimes Enforcement Network.

Charles M. Steele, Deputy Director, Financial Crimes Enforcement Network.

David A. Lebryk, Commissioner, Financial Management Service.

Wanda J. Rogers, Deputy Commissioner, Financial Management Service.

Frederic Van Zeck, Commissioner, Bureau of the Public Debt.

Anita D. Shandor, Deputy Commissioner, Bureau of the Public Debt.

Larry R. Felix, Director, Bureau of Engraving and Printing.

Pamela J. Gardiner, Deputy Director, Bureau of Engraving and Printing.

Andrew D. Brunhart, Deputy Director, United States Mint.

DATES: Membership is effective on the date of this notice.

FOR FURTHER INFORMATION CONTACT: Catherine R. Schmader, Executive Resources Program Manager, 1500 Pennsylvania Avenue, NW. ATTN: 1801 L Street, NW.—6th Floor, Washington, DC 20220. Telephone: (202) 622–0396.

This notice does not meet the Department's criteria for significant regulations.

Dated: October 22, 2010.

Mariam G. Harvey,

Acting Deputy Assistant Secretary for Human Resources and Chief Human Capital Officer.

[FR Doc. 2010–28113 Filed 11–5–10; 8:45 am]

BILLING CODE 4811–42–P

DEPARTMENT OF VETERANS AFFAIRS

Loan Guaranty: Assistance to Eligible Individuals in Acquiring Specially Adapted Housing; Cost-of-Construction Index

AGENCY: Department of Veterans Affairs.

ACTION: Notice.

SUMMARY: The U. S. Department of Veterans Affairs (VA) announces that the aggregate amounts of assistance available under the Specially Adapted Housing (SAH) grant program remains unchanged during fiscal year 2011, pursuant to 38 CFR 36.4412.

DATES: *Effective Date:* October 1, 2010.

FOR FURTHER INFORMATION CONTACT: William White, Acting Assistant Director for Loan Policy and Valuation, Department of Veterans Affairs, 810 Vermont Avenue, NW., Washington, DC 20420, (571) 272–0084 (not a toll-free number).

SUPPLEMENTARY INFORMATION: In accordance with 38 U.S.C. 2102(e) and 38 CFR 36.4412(c), the Secretary of the Department of Veterans Affairs announces the aggregate amounts of assistance available to Veterans and Servicemembers eligible for the Specially Adapted Housing program grants during fiscal year 2011.

Public Law 110–289, the Housing and Economic Recovery Act of 2008, authorized the Secretary to increase the aggregate amounts of SAH assistance annually based on a residential home cost-of-construction index. The Secretary uses the Turner Building Cost Index for this purpose.

During the most recent calendar year for which the Turner Building Cost Index is available, 2009, the index did not increase as compared to the next preceding year. Pursuant to 38 CFR 36.4412(b), therefore, the aggregate amounts of assistance for Specially Adapted Housing grants will remain unchanged during fiscal year 2011.

Full Text of Announcement Reads as Follows:

Specially Adapted Housing: Aggregate Amounts of Assistance Available During Fiscal Year 2011

2101(a) Grants

The aggregate amount of assistance available for SAH grants made pursuant to 38 U.S.C. 2101(a) will be $63,780 during fiscal year 2011.

2101(b) Grants

The aggregate amount of assistance available for SAH grants made pursuant to 38 U.S.C. 2101(b) will be $12,756 during fiscal year 2011.

Temporary Residence Adaption (TRA) Grants

Please note that TRA grants made pursuant to 38 U.S.C. 2102A are not indexed, and the amounts of assistance remain unchanged at $14,000 for individuals eligible for the 2101(a) grant and $2,000 for individuals eligible for the 2101(b) grant.

Approved: November 1, 2010.

John R. Gingrich,

Chief of Staff, Department of Veterans Affairs.

[FR Doc. 2010–28127 Filed 11–5–10; 8:45 am]

BILLING CODE P

Federal Register

Monday,
November 8, 2010

Part II

The President

Notice of November 4, 2010—Continuation of Emergency With Respect to Weapons of Mass Destruction

Federal Register
Vol. 75, No. 215
Monday, November 8, 2010

Presidential Documents

Title 3—

The President

Notice of November 4, 2010

Continuation of Emergency With Respect to Weapons of Mass Destruction

On November 14, 1994, by Executive Order 12938, the President declared a national emergency with respect to the unusual and extraordinary threat to the national security, foreign policy, and economy of the United States posed by the proliferation of nuclear, biological, and chemical weapons (weapons of mass destruction) and the means of delivering such weapons. On July 28, 1998, the President issued Executive Order 13094 amending Executive Order 12938 to respond more effectively to the worldwide threat of weapons of mass destruction proliferation activities. On June 28, 2005, the President issued Executive Order 13382 which, *inter alia*, further amended Executive Order 12938 to improve our ability to combat proliferation. The proliferation of weapons of mass destruction and the means of delivering them continues to pose an unusual and extraordinary threat to the national security, foreign policy, and economy of the United States; therefore, the national emergency first declared on November 14, 1994, and extended in each subsequent year, must continue. In accordance with section 202(d) of the National Emergencies Act (50 U.S.C. 1622(d)), I am continuing for 1 year the national emergency declared in Executive Order 12938, as amended.

This notice shall be published in the *Federal Register* and transmitted to the Congress.

THE WHITE HOUSE,
November 4, 2010.

[FR Doc. 2010–28335
Filed 11–5–10; 11:15 am]
Billing code 3195–W1–P

Reader Aids

Federal Register

Vol. 75, No. 215

Monday, November 8, 2010

CUSTOMER SERVICE AND INFORMATION

Federal Register/Code of Federal Regulations	
General Information, indexes and other finding aids	**202–741–6000**
Laws	**741–6000**
Presidential Documents	
Executive orders and proclamations	**741–6000**
The United States Government Manual	**741–6000**
Other Services	
Electronic and on-line services (voice)	**741–6020**
Privacy Act Compilation	**741–6064**
Public Laws Update Service (numbers, dates, etc.)	**741–6043**
TTY for the deaf-and-hard-of-hearing	**741–6086**

ELECTRONIC RESEARCH

World Wide Web

Full text of the daily Federal Register, CFR and other publications is located at: **http://www.gpoaccess.gov/nara/index.html**

Federal Register information and research tools, including Public Inspection List, indexes, and links to GPO Access are located at: **http://www.archives.gov/federal__register**

E-mail

FEDREGTOC-L (Federal Register Table of Contents LISTSERV) is an open e-mail service that provides subscribers with a digital form of the Federal Register Table of Contents. The digital form of the Federal Register Table of Contents includes HTML and PDF links to the full text of each document.

To join or leave, go to **http://listserv.access.gpo.gov** and select *Online mailing list archives, FEDREGTOC-L, Join or leave the list (or change settings);* then follow the instructions.

PENS (Public Law Electronic Notification Service) is an e-mail service that notifies subscribers of recently enacted laws.

To subscribe, go to **http://listserv.gsa.gov/archives/publaws-l.html** and select *Join or leave the list (or change settings);* then follow the instructions.

FEDREGTOC-L and **PENS** are mailing lists only. We cannot respond to specific inquiries.

Reference questions. Send questions and comments about the Federal Register system to: **fedreg.info@nara.gov**

The Federal Register staff cannot interpret specific documents or regulations.

Reminders. Effective January 1, 2009, the Reminders, including Rules Going Into Effect and Comments Due Next Week, no longer appear in the Reader Aids section of the Federal Register. This information can be found online at **http://www.regulations.gov.**

CFR Checklist. Effective January 1, 2009, the CFR Checklist no longer appears in the Federal Register. This information can be found online at **http://bookstore.gpo.gov/.**

FEDERAL REGISTER PAGES AND DATE, NOVEMBER

67011–67200 1
67201–67588 2
67589–67896 3
67897–68168 4
68169–68404 5
68405–68674 8

CFR PARTS AFFECTED DURING NOVEMBER

At the end of each month, the Office of the Federal Register publishes separately a List of CFR Sections Affected (LSA), which lists parts and sections affected by documents published since the revision date of each title.

3 CFR

Proclamations:
8590 67897
8591 67899
8592 67901
8593 67903
8594 67905
8595 67907
8596 68153
8597 68167

Administrative Orders:
Memorandums:
Memorandum of September 20, 2010 67023
Memorandum of September 23, 2010 67025
Notices:
Notice of November 1, 2010 67587
Notice of November 4, 2010 68673
Presidential Determinations:
No. 2010-11 of August 10, 2010 67011
No. 2010-11 of August 10, 2010 (correction) 68405
No. 2010-12 of August 26, 2010 67013
No. 2010-12 of August 26, 2010 (correction) 68407
No. 2010-14 of September 3, 2010 67015
No. 2010-14 of September 3, 2010 (correction) 68409
No. 2010-15 of September 10, 2010 67017
No. 2010-15 of September 10, 2010 (correction) 68411
No. 2010-16 of September 15, 2010 67019
No. 2010-16 of September 15, 2010 (correction) 68413

5 CFR

302 67589
330 67589
335 67589
337 67589
410 67589
1601 68169

Proposed Rules:
731 68222

6 CFR

5 67909

7 CFR

920 67605
993 67607
1215 67609

Proposed Rules:
205 68505
924 68510
1214 ..... 68512, 68529

10 CFR

Proposed Rules:
73 67636
431 67637

12 CFR

Proposed Rules:
226 67458
615 68533
965 68534
966 68534
969 68534
987 68534
1270 68534

14 CFR

25 67201
39 ..... 67611, 67613, 68169, 68172, 68174, 68177, 68179, 68181, 68185
71 ..... 67910, 67911, 68415, 68416
95 67210
121 68189

Proposed Rules:
5 68224
39 ..... 67253, 67637, 67639, 68245, 68246, 68543, 68548
65 68249
71 ..... 68551, 68552, 68554, 68555, 68556, 68557, 68558
119 68224

15 CFR

748 67029
902 68199

16 CFR

1 68416
305 67615

Proposed Rules:
437 68559
1512 67043
1632 67047

17 CFR

Proposed Rules:
Ch. I 67301
1 ..... 67254, 67642
4 67254

15 67258
20 67258
30 67642
39 67277
40 67282
140 67277
180 67657
240 68560

20 CFR

Proposed Rules:
655 67662

21 CFR

520 67031
892 68200
Proposed Rules:
1308 67054

23 CFR

511 68418

27 CFR

9 67616
Proposed Rules:
4 ....67663, 67666, 67669
5 67669
7 67669

29 CFR

1926 68429
4003 68203
4903 68203

31 CFR

510 67912

32 CFR

706 68213

33 CFR

100 67214
165 ....67032, 67216, 67618, 67620
Proposed Rules:
165 67673
167 68568

34 CFR

600 67170
668 67170
682 67170
685 67170

39 CFR

111 68430

40 CFR

52 ....67623, 68447
63 67625
81 67220
86 68448
180 68214
450 68215
1033 68448
1039 68448
1042 68448
1045 68448
1054 68448
1065 68448
Proposed Rules:
52 ....68251, 68259, 68265, 68272, 68279, 68285, 68291, 68294, 68570
60 68296
63 67676
80 68044
81 67303
85 67059
86 ....67059, 68575
152 68297
261 67919
450 68305
721 68306
1033 68575
1036 67059
1037 67059
1039 68575
1042 68575
1045 68575
1054 68575
1065 ....67059, 68575
1066 67059
1068 67059

41 CFR

300-3 67629
301-30 67629
301-31 67629
Appendix E to Ch. 301 67629
302-3 67629
302-4 67629
302-6 67629
303-70 67629

42 CFR

Proposed Rules:
5 67303
433 68583

44 CFR

Proposed Rules:
67 ....67304, 67310, 67317

47 CFR

74 67227
78 67227
Proposed Rules:
1 67060
9 67321
20 67321
64 67333
73 67077

48 CFR

237 67632
252 67632
970 68217

49 CFR

39 68467
325 67634
393 67634
571 67233
Proposed Rules:
523 ....67059, 68312
534 ....67059, 68312
535 ....67059, 68312

50 CFR

17 67512
229 68468
600 67247
622 67247
635 67251
660 67032
665 68199
Proposed Rules:
17 ....67341, 67552, 67676, 67925
660 67810

LIST OF PUBLIC LAWS

This is a continuing list of public bills from the current session of Congress which have become Federal laws. It may be used in conjunction with ''P L U S'' (Public Laws Update Service) on 202–741–6043. This list is also available online at *http://www.archives.gov/federal-register/laws.html*.

The text of laws is not published in the **Federal Register** but may be ordered in ''slip law'' (individual pamphlet) form from the Superintendent of Documents, U.S. Government Printing Office, Washington, DC 20402 (phone, 202–512–1808). The text will also be made available on the Internet from GPO Access at *http://www.gpoaccess.gov/plaws/index.html*. Some laws may not yet be available.

H.R. 3619/P.L. 111–281

Coast Guard Authorization Act of 2010 (Oct. 15, 2010; 124 Stat. 2905)

S. 1510/P.L. 111–282

United States Secret Service Uniformed Division Modernization Act of 2010 (Oct. 15, 2010; 124 Stat. 3033)

S. 3196/P.L. 111–283

Pre-Election Presidential Transition Act of 2010 (Oct. 15, 2010; 124 Stat. 3045)

S. 3802/P.L. 111–284

Mount Stevens and Ted Stevens Icefield Designation Act (Oct. 18, 2010; 124 Stat. 3050)

Last List October 18, 2010

Public Laws Electronic Notification Service (PENS)

PENS is a free electronic mail notification service of newly enacted public laws. To subscribe, go to *http://listserv.gsa.gov/archives/publaws-l.html*

Note: This service is strictly for E-mail notification of new laws. The text of laws is not available through this service. **PENS** cannot respond to specific inquiries sent to this address.