G. Executive Order 13045: Protection of Children From Environmental Health Risks & Safety Risks

The order applies to economically significant rules under *E.O. 12866* that concern an environmental health or safety risk that EPA has reason to believe may disproportionately affect children. This action is not subject to EO 13045 (62 FR 19885, April 23, 1997) because it is not economically significant as defined in EO 12866.

H. Executive Order 13211: Actions That Significantly Affect Energy Supply, Distribution, or Use

This action is not a "significant energy action" as defined in Executive Order 13211 (66 FR 28355, May 22, 2001), because it is not likely to have a significant adverse effect on the supply, distribution, or use of energy.

I. National Technology Transfer and Advancement Act

Section 12(d) of the National Technology Transfer and Advancement Act of 1995 (NTTAA), Public Law 104–113, 12(d) (15 U.S.C. 272 note) directs EPA to use voluntary consensus standards in its regulatory activities unless to do so would be inconsistent with applicable law or otherwise impractical. Voluntary consensus standards are technical standards (*e.g.,* materials specifications, test methods, sampling procedures, and business practices) that are developed or adopted by voluntary consensus standards bodies. NTTAA directs EPA to provide Congress, through OMB, explanations when the Agency decides not to use available and applicable voluntary consensus standards.

This proposed rulemaking does not involve technical standards. Therefore, EPA is not considering the use of any voluntary consensus standards.

J. Executive Order 12898: Federal Actions To Address Environmental Justice in Minority Populations and Low-Income Populations

Executive Order 12898 (59 FR 7629 (Feb. 16, 1994)) establishes Federal executive policy on environmental justice. Its main provision directs Federal agencies, to the greatest extent practicable and permitted by law, to make environmental justice part of their mission by identifying and addressing, as appropriate, disproportionately high and adverse human health or environmental effects of their programs, policies, and activities on minority populations and low-income populations in the United States.

EPA has determined that this proposed rule will not have disproportionately high and adverse human health or environmental effects on minority or low-income populations because it increases the level of environmental protection for all affected populations without having any disproportionately high and adverse human health or environmental effects on any population, including any minority or low-income population. The proposed rule would further regulate and reduce pollutants from sewage in California marine waters thus reducing the risk of exposure to all populations, including those covered under this Executive order.

Lists of Subjects in 40 CFR Part 140

Environmental protection, Sewage disposal, Vessels.

Dated: August 25, 2010.

Jared Blumenfeld,

Regional Administrator, Region IX.

In consideration of the foregoing, EPA is proposed to be amend part 140, chapter 1 of title 40 of the Code of Federal Regulations as follows:

PART 140—[AMENDED]

1. The authority citation for part 140 continues to read as follows:

Authority: 33 U.S.C. 1322.

2. Section 140.4 is amended by adding paragraph (b)(2)to read as follows:

§ 140.4 Complete prohibition.

* * * * *

(b) * * *

(2)(i) For the marine waters, of the State of California, including the territorial sea measured from the baseline as determined in accordance with the Convention on the Territorial Sea and the Contiguous Zone and extending seaward a distance of three miles, and also including all enclosed bays and estuaries subject to tidal influences from the Oregon border (41.999325 North Latitude, 124.212110 West Longitude, decimal degrees, NAD 1983) to the Mexican border (32.471231 North Latitude, 117.137814 West Longitude, decimal degrees, NAD 1983), the discharge of sewage (whether treated or not) from large passenger vessels and from large oceangoing vessels that have two days or more holding capacity is completely prohibited pursuant to CWA section 312(f)(4)(A). A map illustrating these waters can be obtained from EPA or viewed at *http://www.epa.gov/region9/water/no-discharge/overview.html*.

(ii) For purposes of paragraph (b)(2) of this section:

(A) A "large passenger vessel" means a passenger vessel, as defined in section 2101(22) of title 46, United States Code, of 300 gross tons or more, that has berths or overnight accommodations for passengers.

(B) A "large oceangoing vessel" means a private, commercial, government, or military vessel of 300 gross tons or more.

(C) Two days of holding capacity is the ability to hold in a holding tank of suitable design, construction and purpose, as determined by the vessel's flag Administration, at least two days of sewage per the vessel's crew capacity at a generation rate of 8.4 gallons per day per person.

(D) Oceangoing vessel crew capacity is determined by: a certificate of inspection issued by the US Coast Guard for US flagged vessels; or a MARPOL Annex 4 certificate issued by the signatory State for foreign flagged vessels. For either certificate, the maximum number of passengers and crew is identified for the vessel.

* * * * *

[FR Doc. 2010–21950 Filed 9–1–10; 8:45 am]

BILLING CODE 6560–50–P

DEPARTMENT OF COMMERCE

National Oceanic and Atmospheric Administration

50 CFR Part 223

[Docket No. 0808071080–91228–01]

RIN 0648–AW93

Sea Turtle Conservation; Shrimp and Summer Flounder Trawling Requirements

AGENCY: National Marine Fisheries Service (NMFS), National Oceanic and Atmospheric Administration (NOAA), Commerce.

ACTION: Proposed rule; request for comments.

SUMMARY: NMFS proposes to revise the turtle excluder device (TED) requirements to allow the use of new materials and modifications to existing approved TED designs. Specifically, proposed allowable modifications include the use of flat bar, rectangular pipe, and oval pipe as construction materials in currently-approved TED grids; an increase in maximum mesh size on escape flaps from 1⅝ to 2 inches (4.1 to 5.1 cm); the inclusion of the Boone Big Boy TED for use in the shrimp fishery; the use of three large TED and Boone Wedge Cut escape openings; and the use of the Chauvin

shrimp deflector to improve shrimp retention. NMFS also proposes to allow a new TED for use in the summer flounder fishery. Additionally, there are proposed corrections to the TED regulations to rectify an oversight regarding the maximum size chain that can be used on the Parker TED escape opening flap, and the proposed addition of a brace bar as an allowable modification to hard TEDs.

DATES: Written comments (*see* **ADDRESSES**) will be accepted through October 18, 2010.

ADDRESSES: You may submit comments on this proposed rule, identified by 0648–AW93, by any of the following methods:

- *Electronic Submissions:* Submit all electronic public comments via the Federal e-Rulemaking Portal: *http://www.regulations.gov.*
- *Mail:* Michael Barnette, Southeast Regional Office, NMFS, 263 13th Avenue South, St. Petersburg, FL 33701.
- *Fax:* 727–824–5309; Attention: Michael Barnette.

Instructions: All comments received are a part of the public record and will generally be posted to *http://www.regulations.gov* without change. All Personal Identifying Information (for example, name, address, *etc.*) voluntarily submitted by the commenter may be publicly accessible. Do not submit Confidential Business Information or otherwise sensitive or protected information.

NMFS will accept anonymous comments (enter N/A in the required fields, if you wish to remain anonymous). You may submit attachments to electronic comments in Microsoft Word, Excel, WordPerfect, or Adobe PDF file formats only.

FOR FURTHER INFORMATION CONTACT: Michael Barnette, 727–551–5794.

SUPPLEMENTARY INFORMATION:

Background

All sea turtles that occur in U.S. waters are listed as either endangered or threatened under the Endangered Species Act of 1973 (ESA). The Kemp's ridley (*Lepidochelys kempii*), leatherback (*Dermochelys coriacea*), and hawksbill (*Eretmochelys imbricata*) turtles are listed as endangered. The loggerhead (*Caretta caretta*) and green (*Chelonia mydas*) turtles are listed as threatened, except for breeding populations of green turtles in Florida and on the Pacific coast of Mexico, which are listed as endangered.

Sea turtles are incidentally taken, and some are killed, as a result of numerous activities, including fishery-related trawling activities in the Gulf of Mexico and along the Atlantic seaboard. Under the ESA and its implementing regulations, the taking of sea turtles is prohibited, with exceptions identified in 50 CFR 223.206(d), or according to the terms and conditions of a biological opinion issued under section 7 of the ESA, or according to an incidental take permit issued under section 10 of the ESA. The incidental taking of turtles during shrimp or summer flounder trawling is exempted from the taking prohibition of section 9 of the ESA if the conservation measures specified in the sea turtle conservation regulations (50 CFR 223.205) are followed. The regulations require most vessels defined as "shrimp trawlers" and "summer flounder trawlers" (50 CFR 222.102) operating in the southeastern United States (Atlantic area, Gulf area, and summer flounder sea turtle protection area, *see* 50 CFR 223.206) to have a NMFS-approved TED installed in each net that is rigged for fishing to allow sea turtles to escape. TEDs currently approved by NMFS include single-grid hard TEDs and hooped hard TEDs conforming to a generic description, the flounder TED, and one type of soft TED—the Parker soft TED (*see* 50 CFR 223.207). Most approved hard TEDs are described in the regulations (50 CFR 223.207(a)) according to generic criteria based upon certain parameters of TED design, configuration, and installation, including height and width dimensions of the TED opening through which the turtles escape.

TEDs incorporate an escape opening, usually covered by a webbing flap, which allows sea turtles to escape from trawl nets. To be approved by NMFS, a TED design must be shown to be 97 percent effective in excluding sea turtles during testing based upon NMFS-approved scientific testing protocols (50 CFR 223.207(e)(1)). NMFS-approved testing protocols established to date include the "small turtle test" (55 FR 41092, October 9, 1990) and the "wild turtle test" (52 FR 24244, June 29, 1987). Additionally, NMFS has established a leatherback model testing protocol to evaluate a candidate TED's ability to exclude adult leatherback sea turtles (66 FR 24287, May 14, 2001). Because testing with live leatherbacks is impossible, NMFS obtained the carapace measurements of 15 nesting female leatherback turtles and used these data to construct an aluminum pipe-frame model of a leatherback turtle measuring 40 inches (101.6 cm) in width, 60 inches (152.4 cm) in length, and 21 inches (53.3 cm) in height. If the leatherback model and a diver with full scuba gear are able to pass through the escape opening of a candidate TED, that escape opening is judged to be capable of excluding adult leatherback sea turtles, as well as other large adult sea turtles.

Proposed TED Modifications

The new TED designs and modifications included in this rule were developed and tested by NMFS' gear specialists with the Southeast Fisheries Science Center's Harvesting Systems and Engineering Branch, aided by input from the commercial fishing industry. Additionally, information for a study conducted by the Gulf and South Atlantic Fisheries Foundation, Incorporated (2008) was also considered during TED development.

Flat Bar TED

Current TED regulations require the use of specific construction materials for single-grid hard TEDs (50 CFR 223.207(a)(1)(i)). These include solid steel rod with a minimum outside diameter of ¼ inch (0.64 cm); fiberglass or aluminum rod with a minimum outside diameter of ½ inch (1.27 cm); or steel or aluminum tubing with a minimum outside diameter of ½ inch (1.27 cm) and a minimum wall thickness of ⅛ inch (0.32 cm; also known as schedule 40 tubing). These minimum material requirements were designated to insure a TED grid was strong enough to withstand the conditions typically experienced during standard fishing activities, and to insure the integrity of a TED and its ability to exclude sea turtles is not compromised. As offshore shrimp fishers became increasingly aware of the benefits of using larger sized TEDs, TEDs were built using stronger materials such as aluminum and steel pipe to prevent bending of the frame. However, some fishers noticed a decrease in shrimp catch rates with pipe TEDs when compared to TEDs made from thinner materials. Using a flume tank facility in 2005, NMFS' gear specialists measured the internal water flow patterns between an aluminum pipe TED and a TED with deflector bars constructed from aluminum flat bar. Comparisons of these measurements indicated a loss of water behind the pipe TED frame and a measurable diversion of water out of the TED escape opening. In contrast, almost no water diversion was measured with the flat bar TED. In 2005–2007, a fishery-dependent study by the Gulf and South Atlantic Fisheries Foundation, Incorporated (2008) found that the aluminum flat bar TED had statistically significant increases in shrimp catch rates when compared to an aluminum pipe TED. These studies have

demonstrated flat bar TEDs may perform better for shrimp retention than pipe TEDs, and, when properly constructed, may be stronger and less prone to bending compared to pipe TEDs.

When using a flat bar less than ⅜ inch (0.95 cm) in thickness, a brace bar constructed of aluminum or steel rod or tubing specified in 50 CFR 223.207(a)(1)(i)(A) through (C) must be added to a flat bar TED to prevent spreading of the deflector bars beyond the maximum allowable 4 inch (10 cm) spacing between the bars (50 CFR 223.207(a)(4)). The brace bar must be attached to the frame and each individual deflector bar, and may be welded directly to the aft face of the grid or may be attached with spacer bars no longer than 5 inches (12.7 cm) in length that are welded to the aft face of each deflector bar. Spacer bars attached to the deflector bars must be constructed of the same material as the deflector bars (*e.g.,* aluminum flat bar ¼ inch (0.63 cm) in thickness and 1½ inch (3.8 cm) in depth). These spacers will be squared off on one end, which will be welded to the deflector bar, while the other end will need a concave (*i.e.,* half-moon) shape to be welded to the brace bar.

A TED with deflector bars constructed from aluminum flat bar stock, ¼ inch (0.63 cm) in thickness and 1½ inch (3.8 cm) in depth, was evaluated using the small turtle test protocol (55 FR 41092) in June 2006. In a sample size of 25 turtles, the bottom-opening control TED captured 1 turtle. A turtle is considered captured if it fails to escape through the TED within 5 minutes. Based on the performance of the control TED, this meant that a candidate TED would fail the test with 2 turtle captures because of the statistical probability the candidate TED may not achieve the standard (*i.e.,* control TED performance) turtle exclusion rate of 97 percent or more. The flat bar TED was tested in a bottom-opening configuration with a double-cover flap, resulting in 1 capture out of a sample size of 25 turtles, passing the certification test under the small turtle testing protocol.

NMFS' gear specialists with the Southeast Fisheries Science Center's Harvesting Systems and Engineering Branch also determined that rectangular and oval pipe, using the same minimum size and configuration specifications as round pipe, was acceptable for use in TED construction. While not subjected to the small turtle testing protocol, based on the results of the flat bar TED and known performance of TEDs constructed of round pipe, NMFS determined there would be no discernable difference in turtle exclusion rates using similar-shaped materials, specifically rectangular and oval pipe. Additionally, as previously mentioned, the list of approved construction materials for single-grid hard TEDs (50 CFR 223.207(a)(1)(i)) is based on the material's strength and integrity to withstand conditions typically experienced during standard fishing activities. Therefore, if the minimum specifications (*i.e.,* minimum outside diameter/width of ½ inch and a minimum wall thickness of ⅛ inch) are employed when using rectangular or oval pipe, NMFS determined the resulting TED grid would be strong enough for use in the fishery.

Allowable TED Escape Flap Mesh Size

Current regulations specify that TED escape flap webbing may not exceed 1⅝ inch (4.1 cm) in stretched mesh length (50 CFR 223.207(d)(3). Shrimp fishers have requested that mesh sizes up to 2 inches (5.1 cm) be allowed for TED flaps. This would enable them to keep a ready stock of flap material on hand should the flaps need repair, as this size would incorporate the mesh sizes of 1¾- (4.4-) and 2-inch (5.1-cm) mesh used in the body and codends of most shrimp trawls.

The small turtle testing protocol was applied in June 2004 to both the double-cover flap and the 71-inch (180-cm) flap using 2-inch (5.1-cm), #36 twine flap webbing. Both tests were conducted using a top-opening, bent-bar TED with dimensions of 51 inches (129.5 cm) in height by 42 inches (106.7 cm) in width. In a sample size of 25 turtles, the top-opening control TED captured 2 turtles. A turtle is considered captured if it fails to escape through the TED within 5 minutes. Based on the performance of the control TED, this meant that a candidate TED would fail the test with 4 turtle captures because of the statistical probability the candidate TED may not achieve the standard (*i.e.,* control TED performance) turtle exclusion rate of 97 percent or more. Testing of the double cover and 71-inch (180-cm) flap openings with 2 inch (5.1 cm) stretched mesh webbing resulted in 0 captures and 25 escapes, and 1 capture and 24 escapes, respectively. Accordingly, use of 2-inch mesh flap webbing passed the certification test under the small turtle testing protocol.

Boone Big Boy TED

NMFS is also proposing to amend 50 CFR 223.207(b) to allow the use of additional hard TED designs in the shrimp fishery. A straight bar style TED (often referred to as the Georgia Jumper TED) is allowable for use in a bottom-opening configuration with a maximum grid angle at 45 degrees in special areas of the South Atlantic and Gulf of Mexico (within these areas, known as Shrimp Fishery-Sea Turtle Conservation Areas, enhanced sea turtle conservation measures are required due to the presence of important nearshore habitat for benthic immature and subadult sea turtles, particularly Kemp's ridleys, and the likelihood of negative interactions with heavy shrimp trawling activity; 50 CFR 223.207(a)(3)(ii)). Bottom opening bent bar TEDs have been legal for use at angles up to 55 degrees as long as the last 4 inches of the bars are at an angle no greater than 45 degrees. The developer of the Georgia Jumper believed that his bottom-opening, straight-bar TED would pass the small turtle tests at an angle of 55 degrees with an enlarged escape opening.

The Boone Big Boy TED is a large Georgia Jumper grid with an enlarged escape opening. Specifically, the Boone Big Boy TED grid is 48 inches high by 36.5 inches wide. Due to the size of this TED, a brace bar is attached to the aft face of the grid.

The Boone Big Boy TED was submitted for testing with the small turtle testing protocol in June 2008. The Boone Big Boy TED was installed at 54 degrees and was outfitted with a bottom-oriented Boone Wedge Cut escape opening. Testing resulted in 1 capture and 24 escapes, which passes the certification test under the small turtle testing protocol.

Boone Wedge Cut Escape Opening

NMFS is also proposing to amend 50 CFR 223.207(a)(7)(ii) to allow the use of additional TED escape openings in the shrimp fishery. The Boone Wedge Cut escape opening is an enlarged escape opening created by a triangular panel of additional webbing inserted into the trawl as an alternative to the removal of webbing from the trawl to achieve a 71-inch (180-cm) or larger opening for single grid hard TEDs.

The Boone Wedge Cut escape opening is made by making two cuts in the TED extension; one cut is fore and aft (*i.e.,* along the length of the extension) and the other cut is horizontal to the extension. The horizontal cut is 50 meshes long and begins at a point 4 inches (10.2 cm) inward from the outside edge of the grid on one side and runs to the same point on the opposite side of the grid. The fore and aft cut begins in the middle of the horizontal cut and runs forward 49.5 inches (125.7 cm) toward the front edge of the TED extension. The added wedge of webbing is attached along its two leading edges to the edges of the fore and aft cut. The webbing wedge is made of 1⅞ inch (4.8 cm) webbing and must have at least 41

meshes measuring at least 72 inches wide (182.9 cm) along its base (aft edge). The height of the wedge must measure at least 48.5 inches (123.2 cm). The top of the wedge is two bars across the leading edge then cut with a 1 point then 6 bar taper.

An important element of the Boone Wedge Cut escape opening is the aforementioned taper of the webbing wedge sewn into the slit of the extension webbing. Taper is usually expressed as the ratio between the cuts in the components of the mesh that reduce the width of the panel of webbing and the cuts straight aft that extend the length of the panel of webbing. An understanding of net-making terminology is necessary to comprehend the conventions used in describing taper. An individual mesh is composed of four equal lengths of twine, joined by four knots, and the webbing is usually hung in the body of a trawl so that all the meshes form diamond shapes, with the long axis of the diamonds oriented fore-and-aft. The two lengths of twine and the intervening knot on the left and right sides of the mesh are known as "points," and the individual lengths of twine are known as "bars." Since a single bar is half the width of an entire mesh, cutting a bar on the outside edge of a panel of webbing reduces the width of that row of meshes by one half mesh. Continuing cutting in the same direction through the bars on the opposite sides of each mesh and leaving an uncut edge of bars all lying in the same line produce an "all-bar" taper. An all-bar taper reduces the width of a panel of webbing by one mesh for every two rows of twine cut. The all-bar taper is the steepest angle of taper that is used in any portion of the escape opening. Lesser degrees of taper can be produced by interspersing bar cuts with point cuts—cuts straight aft through both lengths of twine in a point. A point cut extends the length of a webbing panel by one mesh without reducing the width. For example, the "6 bars, 1 point" (6b1p) taper of the Boone Wedge Cut escape opening indicates a taper in which the net maker would cut a sequence of six bars (inward) followed by one point (aft). A "straight" or "all-point" cut indicates a cut that leaves all points along the cut edge and that does not reduce the width of the webbing panel. Figure 1 illustrates the components of trawl webbing and offers examples of different tapers:

BILLING CODE 3510–22–P

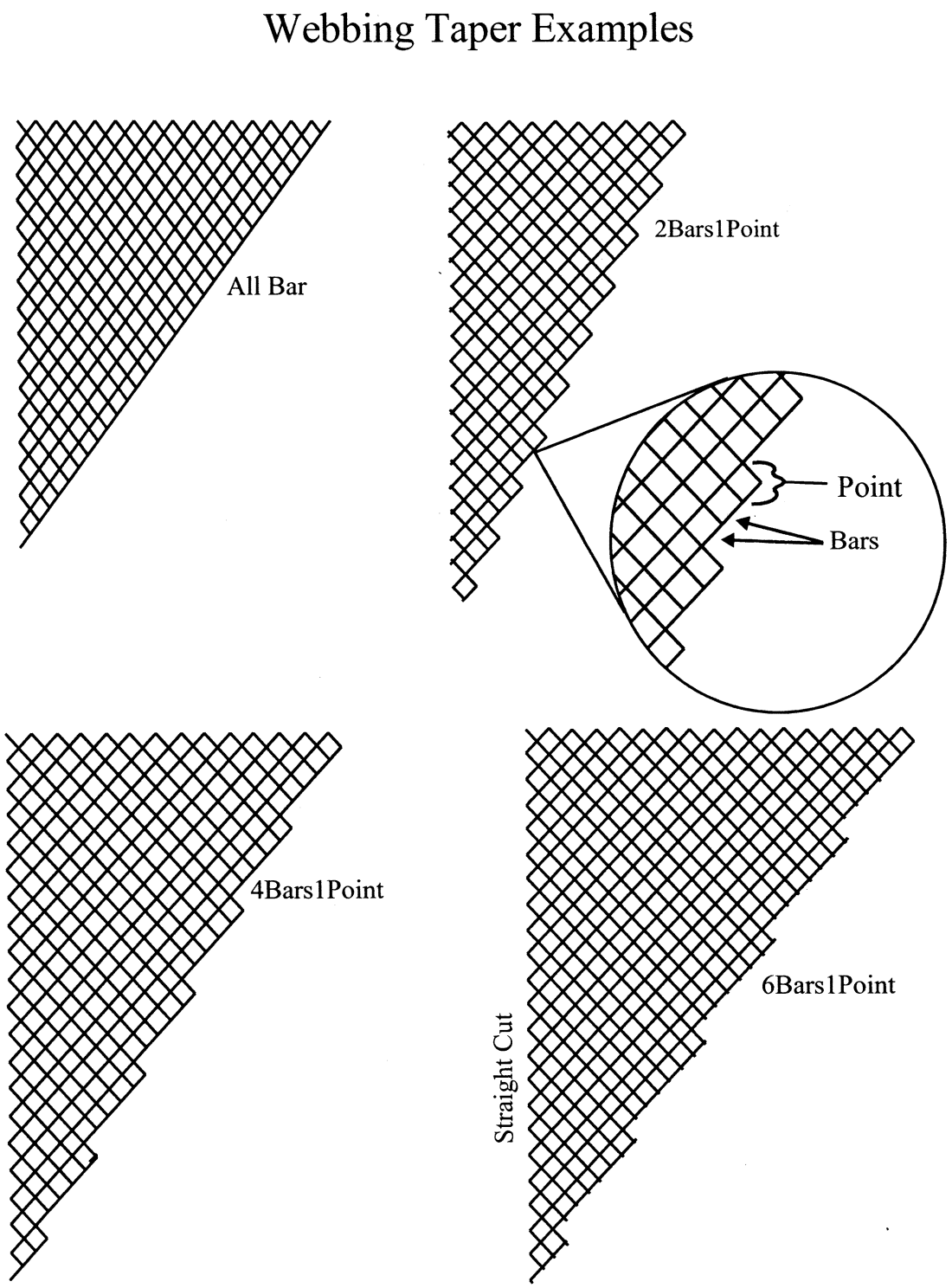

Figure 1. Illustration for Soft TED Designs of the Components of Trawl Webbing and Examples of Tapers.

BILLING CODE 3510–22–C

During testing in 2003 under the small turtle testing protocol, the Boone Wedge Cut escape opening was installed in a 180-mesh (circumference) by 51-mesh (depth) TED extension; the mesh size of the TED extension was 1⅞ inch (4.8 cm) stretched mesh. The TED frame was installed in a bottom-opening configuration and was measured at 50 degrees. Two K–50 Spongex floats were attached to the upper outside half of the TED frame. In a sample size of 25 turtles, the bottom-opening control TED captured 0 turtles. A turtle is considered captured if it fails to escape through the TED within 5 minutes. Based on the performance of the control TED, this meant that a candidate TED would fail the test with 1 turtle capture because of the statistical probability the candidate TED may not achieve the standard (*i.e.,*

control TED performance) turtle exclusion rate of 97 percent or more. Testing of the Boone Wedge Cut escape opening in 2003 resulted in 2 captures and 23 escapes. This result failed to meet the minimum test requirement for certification. NMFS' gear specialists believed the 50-degree fishing angle of the TED was the likely cause of the two turtle captures.

The Boone Wedge Cut escape opening was re-tested via the small turtle testing protocol in 2004 in a top-opening configuration. The TED angle was measured at 50 degrees. All other aspects of the TED installation and opening design were identical to that which was tested in 2003. In a sample size of 25 turtles, the top-opening control TED captured 2 turtles. A turtle is considered captured if it fails to escape through the TED within 5 minutes. Based on the performance of the control TED, this meant that a candidate TED would fail the test with 4 turtle captures because of the statistical probability the candidate TED may not achieve the standard (*i.e.,* control TED performance) turtle exclusion rate of 97 percent or more. Testing of the Boone Wedge Cut escape opening in 2004 resulted in 0 captures in a sample of 25 turtles, passing the certification test under the small turtle testing protocol.

The Boone Wedge Cut escape opening was also tested for leatherback turtle exclusion through the use of an aluminum frame model of an adult leatherback sea turtle controlled by a diver within the trawl and pushing it through the experimental TED opening. This model was used to design and test the current 71-inch and double-cover TED openings. The leatherback model measured 40 inches (101.6 cm) in width, 60 inches (152.4 cm) in length, and 21 inches (53.3 cm) in height. The evaluation was conducted in two separate trials pushing the model through the opening in a carapace-up and carapace-down configuration. In both configurations, the model passed through the Boone Wedge Cut escape opening easily.

Additional evaluations of the Boone Wedge Cut escape opening were conducted in November and December 2004, during trawling operations aboard the R/V GEORGIA BULLDOG, and permitted pursuant to 50 CFR 223.207(e)(2). The evaluations were conducted using remote cameras during actual fishing operations in near-shore waters off the coast of Georgia and Florida. During the evaluations, 30 wild turtles were observed escaping from a bottom-shooting Boone Wedge Cut escape opening; no turtle captures (*i.e.,* failing to escape through the TED within 5 minutes) were observed.

Large TED Escape Openings

NMFS is also proposing to amend 50 CFR 223.207(a)(7)(ii) to allow the use of additional TED escape openings in the shrimp fishery. Shrimp fishermen in Australia have been using a large triangular cut TED escape opening for many years. Because this cut is made along the bars of the trawl webbing, the strain of large codend loads is transferred more efficiently along edges of the cut. This design results in less distortion of the TED opening and flap over time as well as providing better support and angle retention for the TED frame, especially with larger TED frames and trawls.

The triangular cut forms an isosceles triangle (*i.e.,* two sides of equal length) with dimensions that can be configured to meet the minimum dimensional requirements for the exclusion of leatherback sea turtles (*i.e.,* per 50 CFR 223.207(a)(7)(ii)(B)). In order for a triangular cut to meet the minimum dimensions, the length of the two sides of the cut, forward of the TED frame, must be longer than that which is needed for a rectangular TED opening. Additionally, the base measurement of the triangular cut, that is, the minimum straight-line distance of the opening at the TED frame, must be larger. This prevents this style of cut from being used on smaller TED frames.

In 2006, the triangular cut was evaluated by NMFS' gear specialists as an alternate opening for the exclusion of leatherback sea turtles. The evaluations were conducted with no flap covering the TED opening. The evaluations were conducted with the use of an aluminum-frame leatherback sea turtle model controlled by a diver within the trawl and pushing it through the experimental TED opening. This evaluation technique was used to approve the 71-inch (180-cm) offshore and double-cover offshore TED openings (50 CFR 223.207(a)(7)(ii)(B) and (C)). For this evaluation, the triangular cut dimensions were configured to match the minimum perimeter dimensions of a rectangular cut, which has already been approved for the exclusion of leatherback sea turtles (*i.e.,* per 50 CFR 223.207(a)(7)(ii)(B)). For the evaluation, the selected triangular cut straight-line measurement at the TED frame was 40 inches (101.6 cm) in order to match the width of the leatherback model.

Divers experienced no difficulty in pushing the model leatherback frame through the triangular TED opening. The evaluation was conducted in two separate trials pushing the model through the opening in a carapace-up and carapace-down configuration. Based on these observations, NMFS concludes a triangular cut TED opening is an effective TED escape opening design for the exclusion of leatherback sea turtles.

As TED use is expanded to large-trawl fisheries, larger TED frames are needed to better fit the trawls. Alternate escape opening cuts are needed, which will maintain the strength of the TED system even when large codend loads are experienced. The triangular cut TED opening described previously provides one escape opening that also ensures the strength of the TED and TED extension are maintained. Additional large TED escape openings provide greater flexibility in designing the TED escape opening cut to meet variations in large trawl and large TED designs, while maintaining minimum opening dimensions required for the exclusion of leatherback sea turtles.

Additional variations of the triangular cut being proposed in this rulemaking include a similar all-bar cut, but with an additional horizontal leading edge cut that produces a trapezoid escape opening, as well as an all-points side cut that produces a rectangular escape opening. As with the triangular cut, the sum of the straight line, stretched measurements of the opening at the TED frame, the two side cuts and the leading edge cut must be equal to or greater than 147 inches (373.4 cm); therefore, this design will meet the minimum circumference measurement in 50 CFR 223.207(a)(7)(ii)(B)) of 142 inches.

Double Cover Interior Escape Flap

NMFS is also proposing to amend 50 CFR 223.207(d)(3), to allow the use of additional TED escape opening flap configurations in the shrimp fishery. In 2008, NMFS evaluated several flap designs for installation with the triangular cut TED escape opening. Diver evaluations of the triangular cut TED escape opening with either the double-cover or 71-inch (180-cm) flaps revealed a potential turtle capture problem. With a rectangular flap sewn over the triangular cut, pockets were formed between the outside of the TED extension and the flap in an area between the apex of the cut and the sides of the flap. These areas could be problematic for smaller, juvenile turtles as they could become entrapped. As a solution to this problem, NMFS' gear specialists designed a flap which is installed inside the TED extension, thereby eliminating the pocket areas formed with an exterior flap installation. This flap system is labeled the double-cover interior flap (DCI flap).

The triangular cut and DCI flap opening were evaluated by NMFS' gear specialists using the small turtle testing protocol in June 2008. The triangular cut with a DCI flap was installed on a 51-inch (129.5-cm) high by 42-inch (106.7-cm) wide bent-bar TED (50 CFR 223.207(a)(3)(ii)) in a top-opening configuration. The dimensions of the flap met all existing regulatory requirements pertaining to the double-cover flap, with the exception that the leading edge and sides of each flap piece were attached to the inside of the TED extension. At the point where the sides of each flap piece intersected the TED frame, the flap sides were then sewn to a row of meshes aft of the TED frame and on the outside of the TED extension. NMFS' diver observations confirmed that this method of attaching the flap provided a much smoother shape and more uniform seal against the TED frame while fishing, especially when installed on large TED frames, which require larger pieces of flap material to cover the TED opening.

During the small turtle testing protocol, the top-opening control TED scored 0 turtle captures in a sample size of 25 turtles. A turtle is considered captured if it fails to escape through the TED within 5 minutes. Testing of the triangular cut with a DCI flap resulted in 0 turtle captures in a sample of 25 turtles, thus matching the control TED performance and passing the certification test under the small turtle testing protocol.

Additional evaluations of the triangular cut and DCI flap were conducted in March 2008, during trawling operations aboard the R/V GEORGIA BULLDOG, permitted pursuant to 50 CFR 223.207(e)(2). The evaluations were conducted using remote cameras during actual fishing operations in near-shore waters off the coast of Georgia. The opening was evaluated on a 51-inch (129.5-cm) high by 42-inch (106.7-cm) wide bent-bar TED in a bottom-opening configuration. During the evaluations, two wild turtles were observed escaping from the triangular opening with a DCI flap; no turtle captures (*i.e.,* failing to escape through the TED within 5 minutes) were observed.

Chauvin Shrimp Deflector

NMFS is also proposing to amend 50 CFR 223.207(d) to add a shrimp deflector as an allowable modification to hard TEDs. As a means of reducing the loss of shrimp through the TED opening, a Louisiana fisherman developed a simple shrimp deflector device pursuant to 50 CFR 223.207(e)(2). The device consists of a length of 3-inch (7.6-cm) diameter PVC pipe positioned perpendicular to the flow of water within the trawl along the leading edge of the TED escape opening. Shrimp that are moving down the top of the trawl and TED extension come in contact with the pipe and are deflected down and away from the TED escape opening.

To ensure that the Chauvin shrimp deflector would not interfere with the escapement of turtles, the device was evaluated using the small turtle testing protocol. The device was installed in a top-opening, bent-bar TED which measured 52 inches (132.1 cm) in height by 42 inches (106.7 cm) in width. A double-cover flap was installed over the opening and modified by the installation of zippers along the leading edge of each flap piece. The zippers allow each flap piece of the double-cover flap to be easily rolled back to allow for improved fish escapement through the TED. Testing of the Chauvin shrimp deflector resulted in 0 turtle captures out of 25 trials, thereby passing the test for certification. An additional evaluation was conducted to ensure that the device would not prevent the escapement of larger sea turtles through the TED escape opening. The evaluation was conducted through the use of an aluminum-frame leatherback sea turtle model, controlled by a diver within the trawl and pushing it through the experimental TED opening. The leatherback model measured 40 inches (101.6 cm) in width, 60 inches (152.4 cm) in length, and 21 inches (53.3 cm) in height. Divers experienced no difficulty in pushing the model leatherback frame through the double-cover TED opening with the Chauvin shrimp deflector installed. Due to anticipated issues with debris accumulation and subsequent turtle escapement, the Chauvin shrimp deflector was not tested in a bottom-opening TED configuration; therefore, it may not be installed in a net with a bottom escape opening.

Parker TED Offshore Opening

The current specifications at 50 CFR 223.207(c)(1)(iv)(B) for the offshore opening of the Parker TED allow the use of a single row of steel chain no larger than 3⁄16 inch (0.48 cm) to be sewn on to the back edge of the webbing flap. However, when the Parker TED was tested and certified by NMFS' gear specialists in June 1997, it was rigged with ¼ inch (0.64 cm) steel chain. Therefore, the proposed rule would amend 50 CFR 223.207(c)(1)(iv)(B) to correct this error and allow the use of chain no larger than ¼ inch (0.64) to be used on the trailing edge of the webbing flap.

Modified Flounder TED

NMFS is also proposing to amend 50 CFR 223.207(b), to add an additional TED for use in the summer flounder fishery. As an alternative to the flounder TED specified at 50 CFR 223.207(b)(1), the Northeast Fisheries Science Center and industry developed a modified flounder TED grid that offered a larger grid surface to mitigate potential clogging issues to improve catch retention, and which had the ability to be rolled onto a net reel. The modified flounder TED consists of two frame sections 36 inches (91.4 cm) in height and 48 inches (121.9 cm) in width, which are lashed together with heavy twine in order to maintain a consistent angle in both sections. The perimeter of the modified flounder TED is constructed of round pipe, while the deflector bars are constructed of flat bar. The upper frame section consists of vertical flat deflector bars, while the lower frame section has angled horizontal flat bars. The lower frame section also has three rectangles, each with a height of 10 inches (25.4 cm) and a width of 14 inches (35.6 cm), which are framed using round pipe.

The modified flounder TED was evaluated using the small turtle test protocol in June 2008. In a sample size of 25 turtles, the top-opening control TED captured 0 turtles. A turtle is considered captured if it fails to escape through the TED within 5 minutes. Based on the performance of the control TED, this meant that a candidate TED would fail the test with 1 turtle capture because of the statistical probability the candidate TED may not achieve the standard (*i.e.,* control TED performance) turtle exclusion rate of 97 percent or more. The modified flounder TED was tested in a top-opening configuration installed at 30 degrees with 5-inch bar spacing in the upper grid, and captured 2 turtles in 14 turtle exposures, at which point the evaluation was terminated; both of these turtle captures occurred when the turtles passed through the 5-inch bar spacing of the upper grid. The modified flounder TED was reconfigured with 4-inch bar spacing and re-tested. The modified flounder TED with 4-inch bar spacing in the upper grid (top-opening configuration installed at 30 degrees) captured 0 turtles in a sample size of 25 exposures, passing the certification test under the small turtle testing protocol; due to time constraints, testing was not conducted at higher angles.

The modified flounder TED was again evaluated using the small turtle test

protocol in July 2009 to determine its effectiveness at higher angles. In a sample size of 25 turtles, the top-opening control TED captured 2 turtles. A turtle is considered captured if it fails to escape through the TED within 5 minutes. Based on the performance of the control TED, this meant that a candidate TED would fail the test with 1 turtle capture because of the statistical probability the candidate TED may not achieve the standard (*i.e.,* control TED performance) turtle exclusion rate of 97 percent or more. The modified flounder TED was tested in a top-opening configuration installed at 55 degrees, and captured 3 turtles in 7 exposures, failing the certification test under the small turtle testing protocol. The modified flounder TED was re-installed at 45 degrees, and captured 0 turtles in 25 exposures, passing the certification test under the small turtle testing protocol. Therefore, the modified flounder TED is certified for use only at angles between 30 and 45 degrees.

Addition of Brace Bars as Allowable Modifications to Hard TEDs and Special Hard TEDs

NMFS is also proposing to amend 50 CFR 223.207(d), to allow the use of a horizontal brace bar on a TED to increase the strength of the grid and prevent flexing of the vertical deflector bars. When properly installed on the rear face of the TED grid, a brace bar has no effect on turtle exclusion out of the TED escape opening. While a brace bar is required on the proposed flat bar TED, NMFS proposes to add brace bars as an allowable optional modification to other hard TEDs. Specifically, a brace bar constructed of aluminum or steel rod or tubing specified in 50 CFR 223.207(a)(1)(i)(A) through (C) may be added to a TED to prevent spreading of the deflector bars beyond the maximum allowable 4 inch (10 cm) spacing between the bars (50 CFR 223.207(a)(4)). The brace bar must be attached to the frame and each individual deflector bar, and may be welded directly to the aft face of the grid or may be attached with spacer bars no longer than 5 inches (12.7 cm) in length that are welded to the aft face of each deflector bar. Spacer bars attached to the deflector bars must be constructed of the same material as the deflector bars (*e.g.,* solid steel rod with a minimum outside diameter of ¼ inch (0.63 cm). For solid bar and tubing, spacers will need concave (*i.e.,* half-moon) shaped ends to be welded to the deflector and brace bar.

Summary of Proposed Revisions to TED Requirements

Based on the documented results during TED testing, NMFS proposes to authorize: the use of ¼ inch (0.63 cm) thick and 1½ inch (3.8 cm) deep flat bar, and rectangular and oval pipe meeting the current minimum dimensions cited at 50 CFR 223.207(a)(1) as construction materials in currently-approved TED grids; an increase in maximum mesh size on escape flaps from 1⅝ to 2 inches (4.1 to 5.1 cm); the inclusion of the Boone Big Boy TED for use in the shrimp fishery; the use of three large TED and Boone Wedge Cut escape openings; and the use of the Chauvin Shrimp Deflector in a top-opening TED configuration to improve shrimp retention. NMFS also proposes to include a new TED for use in the summer flounder fishery. Additionally, there is a proposed correction to the TED regulations to rectify an error regarding the maximum size chain that can be used on the Parker TED escape opening flap, and the proposed addition of a brace bar as an allowable modification to hard TEDs.

References Cited

Gulf and South Atlantic Fisheries Foundation, Incorporated. 2008. An Assessment of Turtle Excluder Devices within the Southeastern Shrimp Fisheries of the United States. NOAA/NMFS Cooperative Agreement Number NA04NMF4540112;#92.

Certifications

This proposed rule has been determined to be not significant for purposes of Executive Order 12866.

The Chief Counsel for Regulation of the Department of Commerce certified to the Chief Counsel for Advocacy of the Small Business Administration that this rule would not have a significant economic impact on a substantial number of small entities. The basis for this certification follows:

This proposed rule would not impose any new requirements on fishing entities in the southeastern shrimp fishery. An exact number of total fishing entities in the southeastern shrimp fishery is unavailable, though approximately 5,000 vessels are estimated as currently active. This proposed rule would simply allow fishermen, at their discretion, to use an alternative TED in their shrimp nets. Any decision to use an alternative TED would be expected to occur only if a fisherman judges it will result in improved fishing performance without a substantial increase in cost. As a result, any effects are expected to be positive and no adverse economic impacts are expected to accrue. Therefore, an initial regulatory flexibility analysis is not required and none has been prepared.

The Endangered Species Act provides the statutory basis for this rule.

List of Subjects in 50 CFR Part 223

Endangered and threatened species; Exports; Imports; Transportation.

Dated: August 26, 2010.

Samuel D. Rauch III,

Deputy Assistant Administrator for Regulatory Programs, National Marine Fisheries Service.

For the reasons set out in the preamble, 50 CFR Part 223 is proposed to be amended as follows:

PART 223—THREATENED MARINE AND ANADROMOUS SPECIES.

1. The authority citation for part 223 continues to read as follows:

Authority: 16 U.S.C. 1531–1543; subpart B, § 223.201–202 also issued under 16 U.S.C. 1361 *et seq.;* 16 U.S.C. 5503(d) for § 223.206(d)(9).

2. In § 223.207, paragraph (a)(1)(i) introductory text is revised; paragraph (a)(1)(i)(C) is revised; new paragraph (a)(1)(i)(D) is added; paragraphs (a)(7)(ii)(D) and(E) are added; new paragraphs (b)(3) and(4) are added; paragraph (c)(1)(iv)(B) is revised; paragraphs (d)(3) introductory text and (d)(3)(iii) are revised; and paragraphs (d)(3)(iv), (d)(8), and (d)(9) are added, to read as follows:

§ 223.207 Approved TEDs.

* * * * *

(a) * * *

(1) * * *

(i) *Single-grid and inshore hooped hard TED.* A single-grid hard TED or an inshore hooped hard TED must be constructed of one or a combination of the following materials, unless otherwise specifically restricted below, with minimum dimensions as follows:

* * * * *

(C) Steel or aluminum round, oval, or rectangular tubing with a minimum outside diameter or width of ½ inch (1.27 cm) and a minimum wall thickness of ⅛ inch (0.32 cm; also known as schedule 40 tubing).

(D) Steel or aluminum flat bar with dimensions no less than ¼ inch (0.64 cm) in thickness by 1-½ inches (3.85 cm) in depth. For flat bar less than ⅜ inch (0.95 cm) in thickness, a horizontal brace bar to reinforce the deflector bars must be permanently attached to the frame and the rear face of each of the deflector bars within 4 inches (10.2 cm) of the midpoint of the TED frame. The

horizontal brace bar must be constructed of approved material consistent with paragraph (a)(1)(i) of this section. The horizontal brace bar may be offset behind the deflector bars, using spacer bars, not to exceed 5 inches (12.7 cm) in length and constructed of the same size or larger flat bar as the deflector bars.

* * * * *

(7) * * *

(ii) * * *

(D) *Boone Wedge Cut opening.* (Figure 17 to this part). The escape opening is made by making two cuts in the TED extension; one cut is fore and aft (*i.e.,* along the length of the extension) and the other cut is horizontal to the extension. The horizontal cut is 50 meshes long and begins at a point 4 inches (10.2 cm) inward from the outside edge of the grid on one side and runs to the same point on the opposite side of the grid. The fore and aft cut begins in the middle of the horizontal cut and runs forward 49.5 inches (125.7 cm) toward the front edge of the TED extension. The added wedge of webbing is attached along its two leading edges to the edges of the fore and aft cut. The webbing wedge is made of 1⅞ inch (4.8 cm) webbing and must have at least 41 meshes measuring at least 72 inches wide (182.9 cm) along its base (aft edge). The height of the wedge must measure at least 48.5 inches (123 cm). The top of the wedge is two bars across the leading edge then cut with a 1 point then 6 bar taper. A webbing flap, as described in paragraph (d)(3)(iv) of this section, may be used with this escape opening, so long as the minimum opening size is achieved.

(E) *Large TED openings.* (Figures 18a, 18b, and 18c of this part). Large TED escape openings may be utilized in the following configurations:

(*1*) A triangular cut (Figure 18a to this part), where the base of the triangle is defined by a straight-line measurement of the opening between the webbing attachment points on the TED frame that is no less than 40 inches (102 cm). The two side cuts of the triangle must be an all-bar taper from the point at which the webbing attaches to the TED frame to the apex of the triangle cut. Each side cut of the triangle must measure no less than 53 inches (135 cm). The sum of the straight-line base measurement and two side cuts must be no less than 147 inches (373 cm). The side cuts of the triangular opening may be reinforced using rib lines attached from the TED frame to the apex of the opening. A webbing flap, as described in either paragraph (d)(3)(ii) or (iii) of this section, may be used with this escape opening, so long as the minimum opening size is achieved.

(*2*) All-bar or all-points side cuts and a horizontal leading edge cut (Figures 18b and 18c to this part), where the straight-line measurement of the opening between the webbing attachment points on the TED frame may not be less than 40 inches (102 cm), and the two side cuts of the escape opening must not be less than 26 inches (66 cm) long from the points of the cut immediately forward of the TED frame. Only all-bar or all-points side cuts may be used; no combination tapers may be used when making the side cuts. The sum of the straight-line base measurement and the stretched measurements of the side cuts and leading edge cut must be no less than 147 inches (373 cm). A webbing flap, as described in either paragraph (d)(3)(ii) or (iii) of this section, may be used with this escape opening, so long as the minimum opening size is achieved.

* * * * *

(b) * * *

(3) *Boone Big Boy TED.* The Boone Big Boy TED is a single-grid hard TED with a minimum outside horizontal and vertical measurement of 36.5 inches (92.7 cm) and 48 inches (121.9 cm), respectively. The frame must be constructed of steel rod with a minimum outside diameter of ½ inch (1.3 cm). The deflector bars must be constructed of steel rod with a minimum outside diameter of ¼ inch (0.64 cm). The space between the deflector bars must not exceed 4 inches (10.2 cm). A horizontal brace bar constructed of at least ¼ inch (0.64-cm) steel rod must be permanently attached to the frame and the rear face of each of the deflector bars within 4 inches (10.2 cm) of the midpoint of the TED frame. The horizontal brace bar may be offset behind the deflector bars, using spacer bars, not to exceed 5 inches (12.7 cm) in length and must be constructed of the same size or larger material as the deflector bars. The Boone Big Boy TED must be used with the Boone Wedge Cut escape opening specified in (a)(7)(ii)(D) of this section. The angle of the deflector bars must be between 30° and 55° from the normal, horizontal flow through the interior of the trawl. The Boone Big Boy TED is exempt from the requirements of paragraph (a)(3)(ii) of this section, and may be installed at 55° when fishing in the Gulf SFSTCA or the Atlantic SFSTCA.

(4) *Modified flounder TED.* (Figure 11 to this part). The modified flounder TED is approved for use only in the Atlantic summer flounder bottom trawl fishery. The modified flounder TED is not an approved TED for use by shrimp trawlers. The modified flounder TED incorporates two separate grid frames that are attached together. The frames of the grids must be constructed of at least 1¼ inch (3.2 cm) outside diameter aluminum or steel pipe with a wall thickness of at least ⅛ inch (0.32 cm). Each of the two grids of the modified flounder TED must have outside dimensions of at least 36 inches (91.4 cm) in height and at least 48 inches (121.9 cm) in width. The upper grid is equipped with vertical deflector bars, which must be constructed of aluminum or steel flat bar with a minimum depth of 1¼ inches (3.2 cm) and a minimum thickness of ⅜ inch (0.95 cm). Vertical deflector bars must be connected to the top and bottom of the upper grid. The space between the deflector bars of the upper grid must not exceed 4 inches (10.2 cm). The lower grid is fabricated with both horizontal and vertical deflector bars, creating four narrow horizontal openings at the top, and three large rectangular openings along the bottom of the grid. The lower grid must have at least three horizontal deflector bars, constructed of aluminum or steel flat bar with a minimum depth of 1½ inches (3.8 cm) and a minimum thickness of ⅜ inch (0.95 cm), which are connected to each side of the grid and angled at 30° from the horizontal plane. Below this, a fourth horizontal deflector bar must be constructed of aluminum or steel pipe with a wall thickness of at least ⅛ inch (0.32 cm) and with a 1¼ inch (3.2 cm) outside diameter. These horizontal deflector bars must yield maximum spacings of 4½ inches (11.4 cm), 5½ inches (14.0 cm), 5½ inches (14.0 cm), and 4½ inches (11.4 cm), as constructed from top to bottom and measured between the leading edges of adjacent deflector bars. There must be a maximum 10-inch (25.4 cm) space between the bottom-most horizontal deflector pipe bar and the grid frame bottom. Two additional vertical pipe sections running from the bottom of the grid frame to the bottom-most horizontal deflector pipe bar must divide the opening at the bottom into three rectangles, each with a maximum height of 10 inches (25.4 cm) and a maximum width of 14 inches (35.6 cm). This TED must comply with paragraph (a)(2) of this section. The upper and lower grids of this TED must be laced together with heavy twine no less than ¼ inch (0.64 cm) in diameter in order to maintain a consistent angle in both sections. There may be a gap between the two sections not to exceed 1 inch (2.54 cm). The angle of the entire TED frame must be between 30° and 45° from

the normal, horizontal flow through the interior of the trawl. The entire width of the escape opening from the trawl must be centered on and immediately forward of the frame at the top of the net when the net is in its deployed position. The slope of the grids and the vertical deflector bars from forward to aft is upward. The modified flounder TED must use an escape opening consistent with paragraph (a)(7)(ii)(B), (C), (D), or (E) of this section. A webbing flap, as described in paragraphs (d)(3)(ii), (iii), or (iv) of this section, may be used with this escape opening, so long as the minimum opening size is achieved. This TED may not be configured with a bottom escape opening. Installation of an accelerator funnel is not permitted with this TED.

(c) * * *

(1) * * *

(iv) * * *

(B) *Offshore opening.* A horizontal cut extending from the attachment of one side of the deflector panel to the trawl to the attachment of the other side of the deflector panel to the trawl must be made in a single row of meshes across the top of the trawl and measure at least 96 inches (243.8 cm) in taut width. All trawl webbing above the deflector panel between the 96-inch (243.8-cm) cut and edges of the deflector panel must be removed. A rectangular flap of nylon webbing not larger than 2-inch (5.1-cm) stretched mesh may be sewn to the forward edge of the escape opening. The width of the flap must not be larger than the width of the forward edge of the escape opening. The flap must not extend more than 12 inches (30.5 cm) beyond the rear point of the escape opening. The sides of the flap may be attached to the top of the trawl but must not be attached farther aft than the row of meshes through the rear point of the escape opening. One row of steel chain not larger than ¼ inch (0.64 cm) may be sewn evenly to the back edge of the flap. The stretched length of the chain must not exceed 96 inches (244 cm). A Parker TED using the escape opening described in this paragraph meets the requirements of § 223.206(d)(2)(iv)(B). This opening or one that is larger must be used in all offshore waters and in the inshore waters of Georgia and South Carolina. It also may be used in other inshore waters.

* * * * *

(d) * * *

(3) *Webbing flap.* A webbing flap may be used to cover the escape opening under the following conditions: No device holds it closed or otherwise restricts the opening; it is constructed of webbing with a stretched mesh size no larger than 2 inches (5.1 cm); it lies on the outside of the trawl; it is attached along its entire forward edge forward of the escape opening; it is not attached on the sides beyond the row of meshes that lies 6 inches (15.2 cm) behind the posterior edge of the grid; the sides of the flap are sewn on the same row of meshes fore and aft; and the flap does not overlap the escape hole cut by more than 5 inches (12.7 cm) on either side.

* * * * *

(iii) *Double cover offshore TED flap.* This flap must be composed of two equal size rectangular panels of webbing. Each panel must be no less than 58 inches (147.3 cm) wide and may overlap each other no more than 15 inches (38.1 cm). The panels may only be sewn together along the leading edge of the cut. The trailing edge of each panel must not extend more than 24 inches (61 cm) past the posterior edge of the grid (Figure 16 to this part). Each panel may be sewn down the entire length of the outside edge of each panel. Paragraph (d)(3) of this section notwithstanding, this flap may be installed on either the outside or inside of the TED extension. For interior installation, the flap may be sewn to the interior of the TED extension along the leading edge and sides to a point intersecting the TED frame; however, the flap must be sewn to the exterior of the TED extension from the point at which it intersects the TED frame to the trailing edge of the flap. Chafing webbing described in paragraph (d)(4) of this section may not be used with this type of flap.

(iv) *Boone Wedge Cut opening flap.* (Figure 17 to this part). This escape opening flap is attached to the trailing edge of the horizontal cut and the wedge. The flap is made from a piece of 1-⅞ inch (4.8 cm) webbing that is trapezoid in shape. The leading edge must be at least 94 meshes wide, stretching to at least 164.5 inches (417.8 cm). The trailing edge is at least 87 meshes wide and at least 152 inches (386.1 cm). The two sides are at least 8 meshes long and at least 15 inches (38.1 cm). The escape opening flap is attached only to the leading edge of the escape opening cut and is not attached along its sides.

* * * * *

(8) *Chauvin shrimp deflector.* (Figures 19a and 19b of this part). The Chauvin shrimp deflector may be used on any approved TED design, but its installation must not reduce the minimum stretched measurements of the TED opening. The Chauvin shrimp deflector may not be installed with a bottom escape opening. The Chauvin shrimp deflector is constructed from a single piece of 3-inch (7.6-cm) inside diameter PVC pipe which measures 30 inches (76.2 cm) in length; the ends of the PVC pipe are left uncapped. A webbing or mesh bag is made and is used to encase the PVC pipe (Figure 19a to this part). The mesh bag is created using a single piece of 1-⅝ inch (4.1 cm) stretched-mesh webbing made of nylon or polyethylene with dimensions 57 meshes wide by 10 meshes deep. The leading edge of the 57-mesh piece of webbing is attached around the PVC pipe and back to the row of meshes located 7 meshes down the 10-mesh length. The ends of the webbing are sewn together on each end forming a webbing bag to assure the PVC pipe remains encased in the webbing. This leaves a 3-mesh tail hanging from the encased PVC pipe. The 3-mesh tail of the encased PVC pipe is then sewn to a single row of meshes on the inside of the trawl along the 57-mesh edge, 3 meshes ahead of the forward cut of the TED escape opening. This would allow a 3-mesh overlap to the left and right of the forward cut (Figure 19b of this part).

(9) *Brace bar.* (Figure 14a of this part). A horizontal brace bar may be added to a TED if it is constructed of aluminum or steel rod or tubing specified in 50 CFR 223.207(a)(1)(i)(A) through (C) and it is permanently attached to the frame and the rear face of each of the deflector bars within 4 inches (10.2 cm) of the midpoint of the TED frame. The horizontal brace bar may be offset behind the deflector bars, using spacer bars, not to exceed 5 inches (12.7 cm) in length and must be constructed of the same size or larger material as the deflector bars.

* * * * *

3. Add Figure 11 to Part 223 to read as follows:

Figure 11 to Part 223—Modified Flounder TED

BILLING CODE 3510–22–P

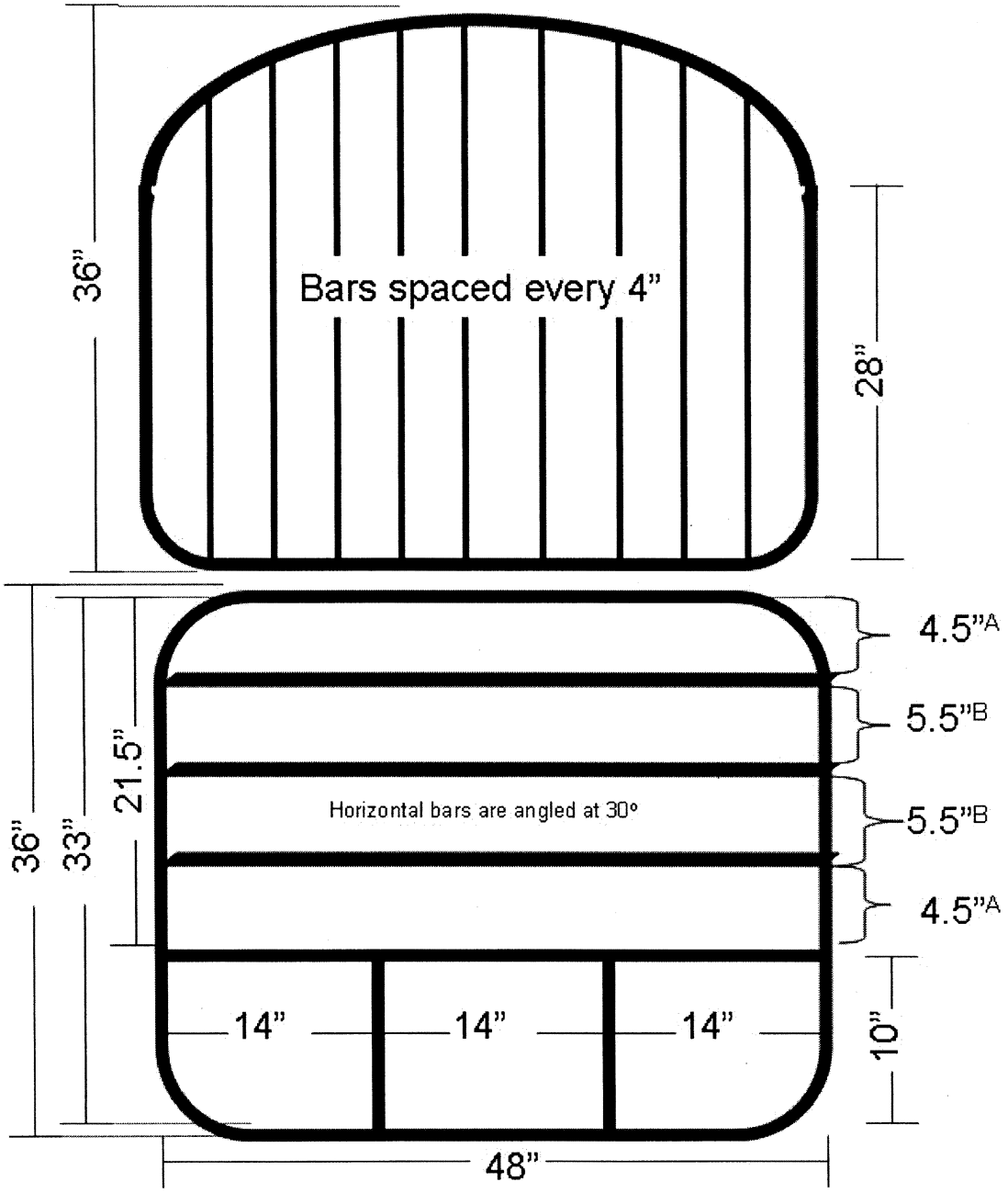

All pipe must be a minimum of 1.25" O.D.; horizontal flat bars shall be a minimum of 1.5" x 0.375"; vertical flat bars shall be a minimum of 1.25" x 0.375"

A – Space between edge of round bar and the leading edge of the adjacent bar is 4.5"

B – Space between leading edge of one bar and the leading edge of the adjacent bar is 5.5"

5. Add Figure 17 to Part 223 to read as follows:

Figure 17 to Part 223—Boone Wedge Cut Escape Opening

Escape Opening Cut Dimensions

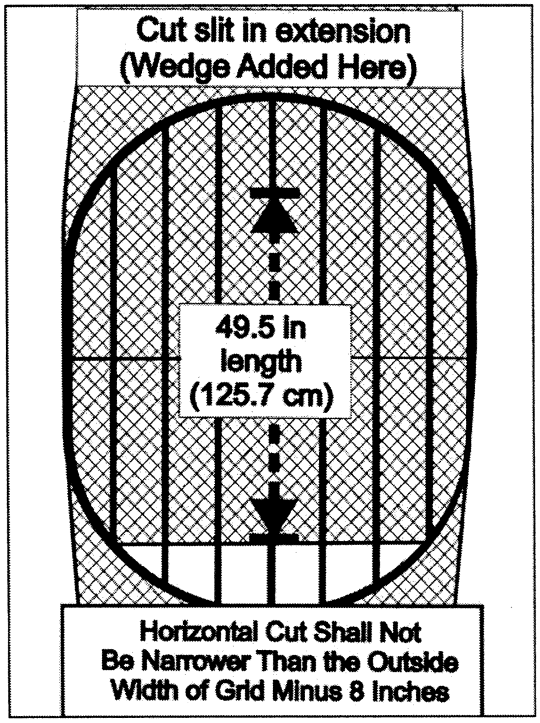

Webbing Wedge Dimensions

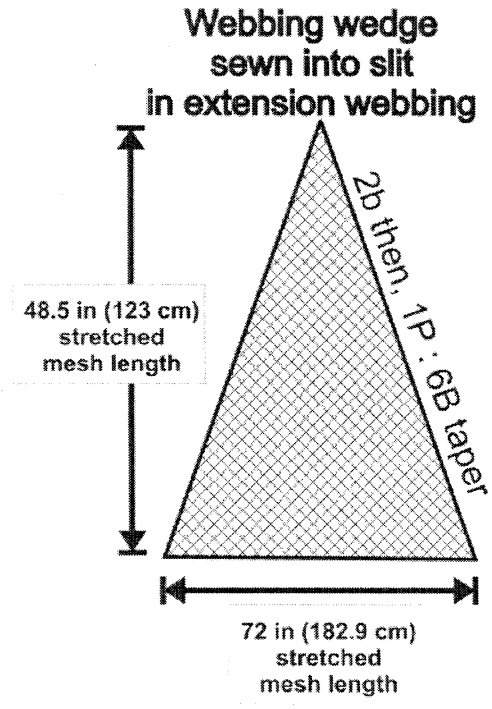

Escape Opening Flap Dimensions

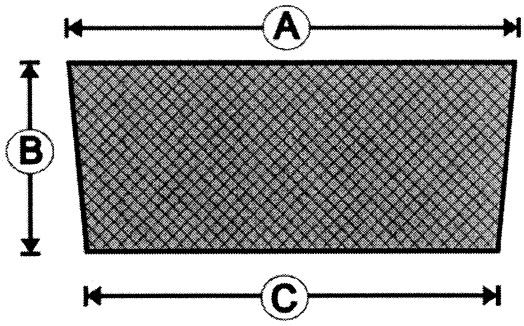

A Leading Edge Width -
164.5 Inches (417.8 cm) Stretched
(94 Meshes of 1-7/8 In. (48 mm) Webbing)

B Depth - 15 Inches (38 cm) Stretched
(8meshes of 1-7/8 In. (48 mm) Webbing)

C Width Trailing Edge -
152 Inches Stretched (87m of 1-7/8")

Escape Opening Flap Attachment

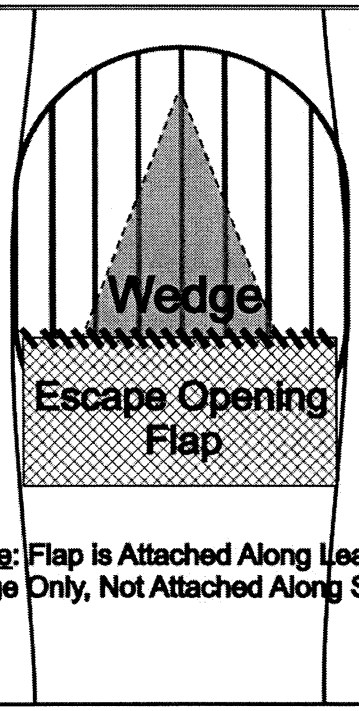

Note: Flap is Attached Along Leading Edge Only, Not Attached Along Sides

6. Add Figures 18a, 18b, and 18c to Part 223 to read as follows:

Figures 18a, 18b, and 18c to Part 223—Large Frame TED Escape Opening: Minimum Dimensions Using All-Bar Cuts (Triangular Cut); Large Frame TED Escape Opening: Minimum Dimensions Using All-Bar Cuts and Leading Edge Cut; Large Frame TED Escape Opening: Minimum Dimensions Using All-Points Side Cut (Rectangular Cut)

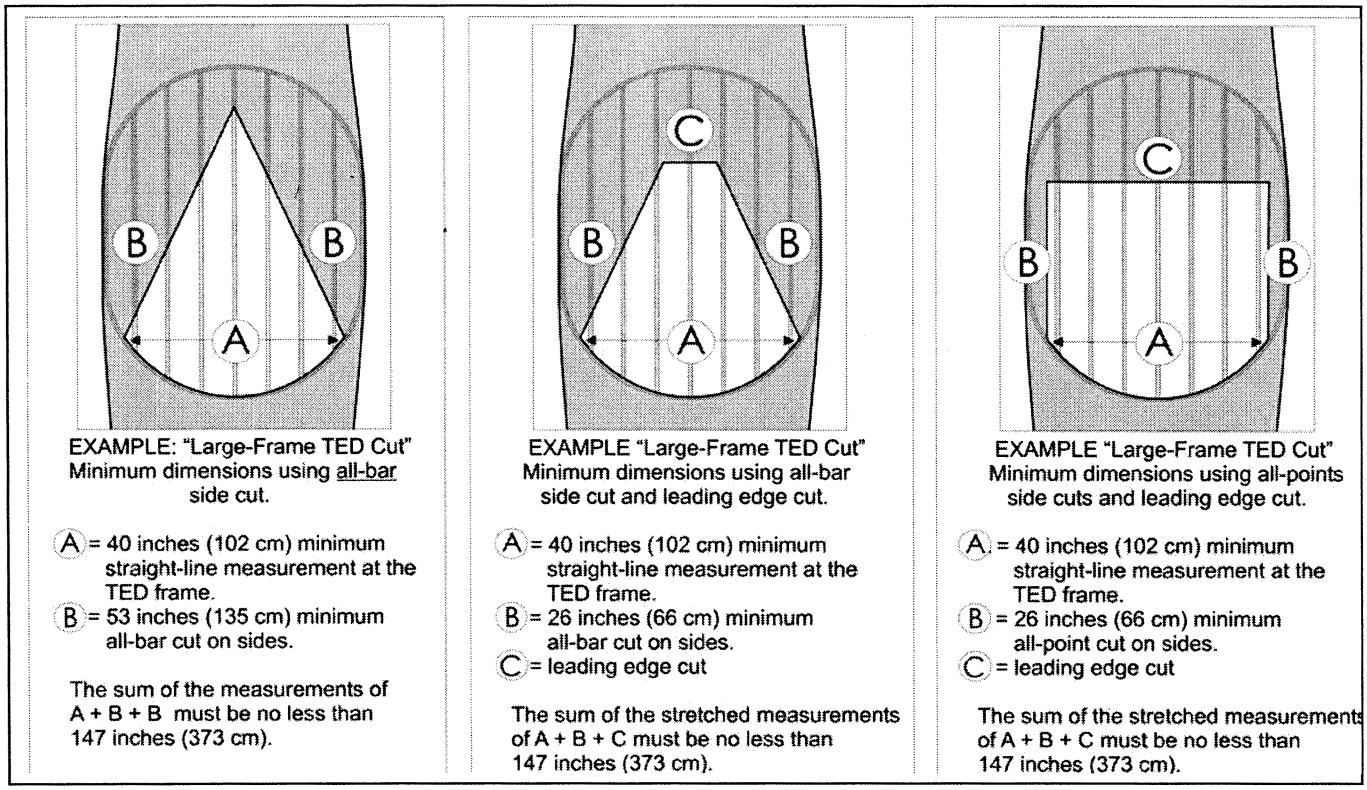

7. Add Figures 19a and 19b to Part 223 to read as follows:

Figures 19a and 19b to Part 223—Chauvin Shrimp Deflector Installation Details

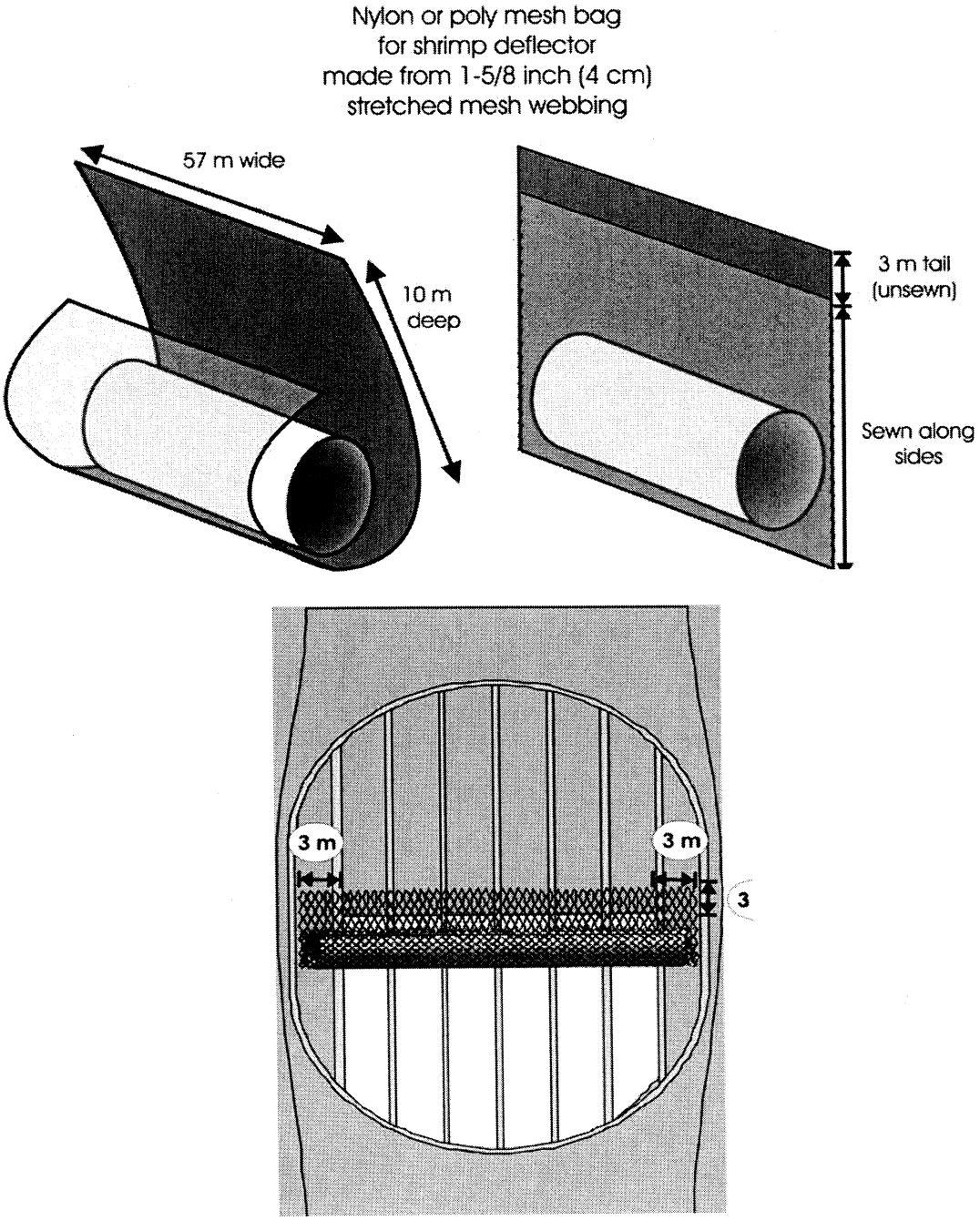

[FR Doc. 2010–21823 Filed 9–1–10; 8:45 am]
BILLING CODE 3510–22–C