7–26–10 Monday
Vol. 75 No. 142 July 26, 2010

Pages 43395–43798

Federal Register

The **FEDERAL REGISTER** (ISSN 0097–6326) is published daily, Monday through Friday, except official holidays, by the Office of the Federal Register, National Archives and Records Administration, Washington, DC 20408, under the Federal Register Act (44 U.S.C. Ch. 15) and the regulations of the Administrative Committee of the Federal Register (1 CFR Ch. I). The Superintendent of Documents, U.S. Government Printing Office, Washington, DC 20402 is the exclusive distributor of the official edition. Periodicals postage is paid at Washington, DC.

The **FEDERAL REGISTER** provides a uniform system for making available to the public regulations and legal notices issued by Federal agencies. These include Presidential proclamations and Executive Orders, Federal agency documents having general applicability and legal effect, documents required to be published by act of Congress, and other Federal agency documents of public interest.

Documents are on file for public inspection in the Office of the Federal Register the day before they are published, unless the issuing agency requests earlier filing. For a list of documents currently on file for public inspection, see *www.federalregister.gov.*

The seal of the National Archives and Records Administration authenticates the Federal Register as the official serial publication established under the Federal Register Act. Under 44 U.S.C. 1507, the contents of the **Federal Register** shall be judicially noticed.

The **Federal Register** is published in paper and on 24x microfiche. It is also available online at no charge as one of the databases on GPO Access, a service of the U.S. Government Printing Office.

The online edition of the **Federal Register**, *www.gpoaccess.gov/nara,* available through GPO Access, is issued under the authority of the Administrative Committee of the Federal Register as the official legal equivalent of the paper and microfiche editions (44 U.S.C. 4101 and 1 CFR 5.10). It is updated by 6 a.m. each day the **Federal Register** is published and includes both text and graphics from Volume 59, Number 1 (January 2, 1994) forward.

For more information about GPO Access, contact the GPO Access User Support Team, call toll free 1-888-293-6498; DC area 202-512-1530; fax at 202-512-1262; or via e-mail at *gpoaccess@gpo.gov.* The Support Team is available between 7:00 a.m. and 9:00 p.m. Eastern Time, Monday–Friday, except official holidays.

The annual subscription price for the **Federal Register** paper edition is $749 plus postage, or $808, plus postage, for a combined **Federal Register, Federal Register** Index and List of CFR Sections Affected (LSA) subscription; the microfiche edition of the **Federal Register** including the **Federal Register** Index and LSA is $165, plus postage. Six month subscriptions are available for one-half the annual rate. The prevailing postal rates will be applied to orders according to the delivery method requested. The price of a single copy of the daily **Federal Register,** including postage, is based on the number of pages: $11 for an issue containing less than 200 pages; $22 for an issue containing 200 to 400 pages; and $33 for an issue containing more than 400 pages. Single issues of the microfiche edition may be purchased for $3 per copy, including postage. Remit check or money order, made payable to the Superintendent of Documents, or charge to your GPO Deposit Account, VISA, MasterCard, American Express, or Discover. Mail to: U.S. Government Printing Office—New Orders, P.O. Box 979050, St. Louis, MO 63197-9000; or call toll free 1-866-512-1800, DC area 202-512-1800; or go to the U.S. Government Online Bookstore site, see *bookstore.gpo.gov.*

There are no restrictions on the republication of material appearing in the **Federal Register.**

How To Cite This Publication: Use the volume number and the page number. Example: 75 FR 12345.

Postmaster: Send address changes to the Superintendent of Documents, Federal Register, U.S. Government Printing Office, Washington, DC 20402, along with the entire mailing label from the last issue received.

SUBSCRIPTIONS AND COPIES

PUBLIC

Subscriptions:

Paper or fiche	**202–512–1800**
Assistance with public subscriptions	**202–512–1806**
General online information	**202–512–1530; 1–888–293–6498**

Single copies/back copies:

Paper or fiche	**202–512–1800**
Assistance with public single copies	**1–866–512–1800 (Toll-Free)**

FEDERAL AGENCIES

Subscriptions:

Paper or fiche	**202–741–6005**
Assistance with Federal agency subscriptions	**202–741–6005**

FEDERAL REGISTER WORKSHOP

THE FEDERAL REGISTER: WHAT IT IS AND HOW TO USE IT

FOR: Any person who uses the Federal Register and Code of Federal Regulations.

WHO: Sponsored by the Office of the Federal Register.

WHAT: Free public briefings (approximately 3 hours) to present:

1. The regulatory process, with a focus on the Federal Register system and the public's role in the development of regulations.
2. The relationship between the Federal Register and Code of Federal Regulations.
3. The important elements of typical Federal Register documents.
4. An introduction to the finding aids of the FR/CFR system.

WHY: To provide the public with access to information necessary to research Federal agency regulations which directly affect them. There will be no discussion of specific agency regulations.

WHEN: Tuesday, September 14, 2010
9 a.m.–12:30 p.m.

WHERE: Office of the Federal Register
Conference Room, Suite 700
800 North Capitol Street, NW.
Washington, DC 20002

RESERVATIONS: (202) 741–6008

Printed on recycled paper.

Contents

Federal Register

Vol. 75, No. 142

Monday, July 26, 2010

Agriculture Department
See Foreign Agricultural Service

Alcohol and Tobacco Tax and Trade Bureau
PROPOSED RULES
Proposed Establishment of the Pine Mountain–Mayacmas Viticultural Area, 43446

Architectural and Transportation Barriers Compliance Board

PROPOSED RULES
Americans With Disabilities Act (ADA) Accessibility Guidelines for Transportation Vehicles, 43748–43789

Army Department
See Engineers Corps
NOTICES
Meetings:
Board of Visitors, Defense Language Institute Foreign Language Center, 43496
Privacy Act; Systems of Records, 43498–43499

Centers for Medicare & Medicaid Services
NOTICES
Medicare and Medicaid Programs:
Application by Det Norske Veritas Healthcare for Deeming Authority for Critical Access Hospitals, 43531–43532
Meetings:
Medicare Evidence Development and Coverage Advisory Committee, 43533–43534

Children and Families Administration
NOTICES
Agency Information Collection Activities; Proposals, Submissions, and Approvals:
Guidance for Tribal TANF, 43530
Request for State Data Needed to Determine Amount of a Tribal Family Assistance Grant, 43530–43531

Commerce Department
See Industry and Security Bureau
See International Trade Administration
See National Oceanic and Atmospheric Administration
NOTICES
Agency Information Collection Activities; Proposals, Submissions, and Approvals, 43485–43486

Consumer Product Safety Commission
NOTICES
Meetings; Sunshine Act, 43491

Defense Department
See Army Department
See Engineers Corps
See National Geospatial-Intelligence Agency
See Navy Department
NOTICES
Charter Renewals:
National Security Education Board, 43492–43493
Uniform Formulary Beneficiary Advisory Panel, 43491–43492
Meetings:
Defense Intelligence Agency Advisory Board, 43493–43494
Privacy Act; Systems of Records, 43494–43495

Defense Nuclear Facilities Safety Board
NOTICES
Meetings; Sunshine Act, 43495–43496

Department of Transportation
See Pipeline and Hazardous Materials Safety Administration

Education Department
PROPOSED RULES
Program Integrity; Gainful Employment, 43616–43708
NOTICES
Applications for New Awards for Fiscal Year 2010:
Charter Schools Program Grants to Non-State Educational Agencies for Planning, etc., 43510–43515
Financial Education for College Access and Success Program, 43502–43510
Meetings:
National Assessment Governing Board, 43515–43517

Employment and Training Administration
NOTICES
Amended Certification Regarding Eligibility To Apply for Worker Adjustment Assistance:
Badger Meter, Inc., et al., Milwaukee, WI, 43556–43557
Experian, Global Technology Services, et al., Schaumburg, IL, 43555–43556
Hartford Financial Services Group, Inc., et al. Aurora, IL and Syracuse, NY, 43557
Hewlett Packard, et al., Pontiac, MI, 43555
Montana Rail Link, Inc., 43556
Wire Products Company, Inc., Cleveland, OH, 43557
Determinations Regarding Eligibility to Apply for Worker Adjustment Assistance, 43557–43561
Investigations Regarding Certifications of Eligibility to Apply for Worker Adjustment Assistance, 43561–43562
Negative Determinations on Reconsideration:
Fanuc Robotics America, Inc., et al., Rochester Hills, MI, 43562–43563
Negative Determinations Regarding Applications for Reconsideration:
Continental Airlines, Inc., 43564–43565
Dow Jones and Co., West Middlesex, PA, 43563–43564
Pendleton Woolen Mills, Inc., Washougal, WA, 43563
Revised Determinations on Reconsideration:
Johns Manville Engineered Products Division, et al., Spartanburg, SC, 43565

Energy Department
See Federal Energy Regulatory Commission
See Western Area Power Administration
NOTICES
Meetings:
Advanced Scientific Computing Advisory Committee, 43518
Blue Ribbon Commission on America Nuclear Future, Transportation and Storage Subcommittee, 43518–43519

Environmental Management Site-Specific Advisory Board, Northern New Mexico, 43517–43518
Environmental Management Site-Specific Advisory Board, Oak Ridge Reservation, 43518

Engineers Corps
NOTICES
Environmental Impact Statements; Availability, etc.:
General Re-Evaluation Report for the Mamaroneck and Sheldrake Rivers Flood Damage Risk Reduction Project, Mamaroneck, Westchester County, NY, 43496

Environmental Protection Agency
RULES
Final Authorization of State Hazardous Waste Management Program Revisions:
Rhode Island, 43409–43418
PROPOSED RULES
Final Authorization of State Hazardous Waste Management Program Revisions:
Rhode Island, 43478–43479
NOTICES
Agency Information Collection Activities; Proposals, Submissions, and Approvals:
National Emission Standards for Hazardous Air Pollutants or Secondary Aluminum Production Residual Risk, 43520–43522
Renewable Fuels Produced Under the Final RFS2 Program from Canola Oil; Supplemental Determinations, 43522–43526

Executive Office of the President
See Presidential Documents

Federal Aviation Administration
RULES
Airworthiness Directives:
Aircraft Industries a.s. Model L 23 Super Blanik Gliders, 43395–43397
Piper Aircraft, Inc. Models PA–32R–301T and PA–46–350P Airplanes; Correction, 43397–43398
Amendment and Establishment of Restricted Areas and Other Special Use Airspace:
Avon Park Air Force Range, FL, 43398–43399
Establishment of Restricted Area R–3405; Sullivan, IN, 43399–43400

Federal Communications Commission
RULES
1998 Biennial Regulatory Review:
Private Land Mobile Radio Services, 43423–43424

Federal Election Commission
RULES
Campaign Travel, 43395

Federal Emergency Management Agency
RULES
Final Flood Elevation Determinations, 43418–43423
PROPOSED RULES
Proposed Flood Elevation Determinations, 43479–43484
NOTICES
Major Disaster and Related Determinations:
Montana, 43537

Federal Energy Regulatory Commission
RULES
Technical Corrections to Commission's Regulations, 43400–43405

Federal Highway Administration
RULES
Certification of Enforcement of the Heavy Vehicle Use Tax, 43405–43409
NOTICES
Final Federal Agency Actions on Proposed Highway in Washington, 43611–43612

Federal Railroad Administration
NOTICES
Application for Approval of Discontinuance or Modification of a Railroad Signal System, 43610

Federal Trade Commission
NOTICES
Agency Information Collection Activities; Proposals, Submissions, and Approvals, 43526–43528

Foreign Agricultural Service
NOTICES
Trade Adjustment Assistance for Farmers, 43485

Health and Human Services Department
See Centers for Medicare & Medicaid Services
See Children and Families Administration
See Health Resources and Services Administration
See National Institutes of Health
NOTICES
Request for Comments:
Draft National Health Security Strategy Biennial Implementation Plan, 43528–43529

Health Resources and Services Administration
NOTICES
Agency Information Collection Activities; Proposals, Submissions, and Approvals, 43529–43530

Homeland Security Department
See Federal Emergency Management Agency
See U.S. Citizenship and Immigration Services
See U.S. Customs and Border Protection

Housing and Urban Development Department
NOTICES
Mortgagee Review Board; Administrative Actions, 43537–43551

Industry and Security Bureau
NOTICES
Agency Information Collection Activities; Proposals, Submissions, and Approvals:
Special Comprehensive License, 43486
Voluntary Self-Disclosure of Antiboycott Violations, 43486–43487

Interior Department
See Land Management Bureau
See Surface Mining Reclamation and Enforcement Office

International Trade Administration
NOTICES
Final Results of Countervailing Duty Administrative Review:
Certain Hot-Rolled Carbon Steel Flat Products from India, 43488–43491

International Trade Commission
NOTICES
Termination of Investigations:
Certain Encapsulated Integrated Circuit Devices and Products Containing Same, 43553–43554

Justice Department
PROPOSED RULES
Nondiscrimination on the Basis of Disability by State and Local Governments, etc.:
Equipment and Furniture, 43452–43460
Nondiscrimination on the Basis of Disability in State and Local Government Services:
Accessibility of Next Generation 9–1–1, 43446–43452
Nondiscrimination on the Basis of Disability:
Accessibility of Web Information and Services of State and Local Government Entities and Public Accommodations, 43460–43467
Movie Captioning and Video Description, 43467–43476
NOTICES
Lodging of Consent Decree Under the Federal Water Pollution Control Act, 43554–43555

Labor Department
See Employment and Training Administration

Land Management Bureau
NOTICES
Environmental Impact Statements; Availability, etc.:
Proposed Monhave County Wind Farm Project; Mohave County; AZ, 43551–43552
Proposed Reinstatement of Terminated Oil and Gas Leases:
Arkansas, 43552–43553
Montana, MTM 97827, 43553
Nevada, 43553

National Aeronautics and Space Administration
NOTICES
Meetings:
Ad-Hoc Task Force on Planetary Defense, 43565

National Archives and Records Administration
NOTICES
Agency Information Collection Activities; Proposals, Submissions, and Approvals, 43565–43566

National Geospatial-Intelligence Agency
NOTICES
Privacy Act; Systems of Records, 43497–43498

National Institutes of Health
NOTICES
Meetings:
Center for Scientific Review, 43532–43533
National Institute on Alcohol Abuse and Alcoholism, 43534
NIH Consensus Development Conference on Inhaled Nitric Oxide Therapy for Premature Infants, 43535

National Oceanic and Atmospheric Administration
NOTICES
Agency Information Collection Activities; Proposals, Submissions, and Approvals:
Vessel Monitoring System Requirements in Western Pacific Pelagic and Bottomfish Fisheries, 43487–43488
Meetings:
Western Pacific Fishery Management Council, 43491

Navy Department
NOTICES
Privacy Act; Systems of Records, 43499–43502

Nuclear Regulatory Commission
PROPOSED RULES
Distribution of Source Material to Exempt Persons and to General Licensees:
Revision of General License and Exemptions, 43425–43446
NOTICES
Applications to Renew Facility Operating Licenses:
University of Maryland, 43566–43571
Environmental Assessments and Findings of No Significant Impact:
Duke Energy Carolinas, LLC, Catawba Nuclear Station, 43571–43572
Duke Energy Carolinas, LLC; McGuire Nuclear Station (Units 1 and 2), 43572–43574
Facility Operating Licenses; Amendments:
Exelon Generation Company, LLC, Peach Bottom Atomic Power Station, 43574–43579
Withdrawal of Application for a Combined License:
Exelon Generation Company, LLC; Victoria County Station, (Units 1 and 2), 43579

Personnel Management Office
NOTICES
Privacy Act; Systems of Records, 43579–43581

Pipeline and Hazardous Materials Safety Administration
NOTICES
Pipeline Safety:
Request for Special Permit, 43612–43613

Postal Regulatory Commission
NOTICES
New Postal Product, 43581–43582

Presidential Documents
ADMINISTRATIVE ORDERS
Delegation of Functions and Authorities (Memorandum of July 21, 2010), 43795
National Defense Authorization Act for 2008; Delegation of Functions (Memorandum of July 21, 2010), 43791–43793
Victims of Iranian Censorship Act; Delegation of Functions (Memorandum of July 21, 2010), 43797

Railroad Retirement Board
NOTICES
Privacy Act; Systems of Records, 43710–43746

Securities and Exchange Commission
NOTICES
Self-Regulatory Organizations; Proposed Rule Changes:
Chicago Board Options Exchange, Inc., 43596–43597
EDGA Exchange, Inc, 43582–43584
EDGX Exchange, Inc, 43584–43587
Financial Industry Regulatory Authority, Inc., 43588–43589
NASDAQ OMX PHLX, Inc., 43590–43591, 43594–43595, 43597–43606
NASDAQ Stock Market LLC, 43591–43594
NYSE Amex LLC, 43587–43588
NYSE Arca, Inc., 43606–43609

Social Security Administration
NOTICES
Agency Information Collection Activities; Proposals, Submissions, and Approvals, 43609–43610

Surface Mining Reclamation and Enforcement Office
PROPOSED RULES
Montana Regulatory Program, 43476–43478

Surface Transportation Board
NOTICES
Construction and Operation Exemptions:
U.S. Rail Corp., Brookhaven Rail Terminal, 43611

Transportation Department
See Federal Aviation Administration
See Federal Highway Administration
See Federal Railroad Administration
See Pipeline and Hazardous Materials Safety Administration
See Surface Transportation Board

Treasury Department
See Alcohol and Tobacco Tax and Trade Bureau
See United States Mint

U.S. Citizenship and Immigration Services
NOTICES
Agency Information Collection Activities; Proposals, Submissions, and Approvals, 43535–43536

U.S. Customs and Border Protection
NOTICES
Agency Information Collection Activities; Proposals, Submissions, and Approvals:
Permit to Transfer Containers to a Container Station, 43536–43537

United States Mint
NOTICES
Meetings:
Citizens Coinage Advisory Committee, 43613

Western Area Power Administration
NOTICES
Parker–Davis Project:
Transmission Capacity for Renewable Energy between Electrical District No. 5 Substation and the Palo Verde Hub, 43519–43520

Separate Parts In This Issue

Part II
Education Department, 43616–43708

Part III
Railroad Retirement Board, 43710–43746

Part IV
Architectural and Transportation Barriers Compliance Board, 43748–43789

Part V
Presidential Documents, 43791–43793, 43795, 43797

Reader Aids

Consult the Reader Aids section at the end of this page for phone numbers, online resources, finding aids, reminders, and notice of recently enacted public laws.

To subscribe to the Federal Register Table of Contents LISTSERV electronic mailing list, go to http://listserv.access.gpo.gov and select Online mailing list archives, FEDREGTOC-L, Join or leave the list (or change settings); then follow the instructions.

CFR PARTS AFFECTED IN THIS ISSUE

A cumulative list of the parts affected this month can be found in the Reader Aids section at the end of this issue.

3 CFR

Administrative Orders:

Memorandums:

Memo. of July 21, 2010 43793

Memo. of July 21, 2010 43795

Memo. of July 21, 2010 43797

10 CFR

Proposed Rules:

30.....43425

40.....43425

70.....43425

170.....43425

171.....43425

11 CFR

9004.....43395

14 CFR

39 (2 documents) 43395, 43397

73 (2 documents) 43398, 43399

18 CFR

2.....43400

3b.....43400

4.....43400

5.....43400

8.....43400

9.....43400

11.....43400

16.....43400

24.....43400

32.....43400

33.....43400

34.....43400

35.....43400

39.....43400

45.....43400

46.....43400

152.....43400

153.....43400

156.....43400

157.....43400

385.....43400

388.....43400

23 CFR

669.....43405

27 CFR

Proposed Rules:

9.....43446

28 CFR

Proposed Rules:

35 (3 documents) 43446, 43452, 43460

36 (3 documents) 43452, 43460, 43467

30 CFR

Proposed Rules:

926.....43476

34 CFR

Proposed Rules:

668.....43616

36 CFR

Proposed Rules:

1192.....43748

40 CFR

271.....43409

Proposed Rules:

271.....43478

44 CFR

67.....43418

Proposed Rules:

67.....43479

47 CFR

95.....43423

Rules and Regulations

Federal Register
Vol. 75, No. 142
Monday, July 26, 2010

This section of the FEDERAL REGISTER contains regulatory documents having general applicability and legal effect, most of which are keyed to and codified in the Code of Federal Regulations, which is published under 50 titles pursuant to 44 U.S.C. 1510.

The Code of Federal Regulations is sold by the Superintendent of Documents. Prices of new books are listed in the first FEDERAL REGISTER issue of each week.

FEDERAL ELECTION COMMISSION

11 CFR Part 9004

[Notice 2010–14]

Campaign Travel

AGENCY: Federal Election Commission.

ACTION: Announcement of effective date.

SUMMARY: On December 7, 2009, the Commission published in the **Federal Register** final rules implementing the provision of the Honest Leadership and Open Government Act governing campaign travel on noncommercial aircraft. This document announces the effective date of amendments made by those final rules to Commission regulations pertaining to travel by and on behalf of publicly funded presidential candidates.

DATES: *Effective Date:* The effective date for the revision to 11 CFR 9004.7 is July 26, 2010.

FOR FURTHER INFORMATION CONTACT: Ms. Amy L. Rothstein, Assistant General Counsel, or Mr. Joshua S. Blume or Ms. Joanna S. Waldstreicher, Attorneys, 999 E Street, NW., Washington, DC 20463, (202) 694–1650 or (800) 424–9530.

SUPPLEMENTARY INFORMATION: On December 7, 2009, the Commission published final rules governing campaign travel on noncommercial aircraft, to implement section 601 of the Honest Leadership and Open Government Act of 2007. *See* Final Rules on Campaign Travel, 74 FR 63951 (Dec. 7, 2009) (the "Travel Rules"); Public Law 110–81, 121 Stat. 735 (codified at 2 U.S.C. 439a(c)). The Travel Rules restrict, and in some situations prohibit, Federal candidates and certain political committees from expending campaign funds for travel on non-commercial aircraft. The Travel Rules also revised Commission regulations regarding travel by and on behalf of presidential candidates receiving public funding for the general election, 11 CFR 9004.7, promulgated pursuant to the Presidential Election Campaign Fund Act, 26 U.S.C. 9001, *et seq.*

Under the Administrative Procedure Act, 5 U.S.C. 553(d), and the Congressional Review of Agency Rulemaking Act, 5 U.S.C. 801(a)(1), agencies must submit final rules to the Speaker of the House of Representatives and the President of the Senate, and publish them in the **Federal Register** at least thirty calendar days before they take effect. In addition, any rules or regulations prescribed by the Commission to carry out the provisions of the Presidential Election Campaign Fund Act must be transmitted to the Speaker of the House of Representatives and the President of the Senate at least thirty legislative days before they are finally promulgated. 26 U.S.C. 9009(c). The thirty legislative day period that began when the Travel Rules were transmitted to Congress ended on February 1, 2010.

In the Travel Rules, the Commission stated that it would publish a separate document announcing the effective date of the amendment to 11 CFR 9004.7 at a later date. Travel Rules, 74 FR at 63951. Through this Notice, the Commission announces that the effective date of the amendment to 11 CFR 9004.7 is the date on which this document is published in the **Federal Register**.

Dated: July 20, 2010.

On behalf of the Commission.

Matthew S. Petersen,

Chairman, Federal Election Commission.

[FR Doc. 2010–18145 Filed 7–23–10; 8:45 am]

BILLING CODE 6715–01–P

DEPARTMENT OF TRANSPORTATION

Federal Aviation Administration

14 CFR Part 39

[Docket No. FAA–2010–0457; Directorate Identifier 2010–CE–019–AD; Amendment 39–16371; AD 2010–15–05]

RIN 2120–AA64

Airworthiness Directives; Aircraft Industries a.s. Model L 23 Super Blanik Gliders

AGENCY: Federal Aviation Administration (FAA), Department of Transportation (DOT).

ACTION: Final rule.

SUMMARY: We are superseding an existing airworthiness directive (AD) for the products listed above. This AD results from mandatory continuing airworthiness information (MCAI) issued by an aviation authority of another country to identify and correct an unsafe condition on an aviation product. The MCAI describes the unsafe condition as:

Cracks on the stabilizer elevator inner hinges of seven L 23 SUPERBLANÍK sailplanes have been detected during an inspection.

This condition, if not corrected, could result in no longer retaining the elevator in place and in jamming of the Pilot's elevator control system, and subsequent loss of elevator control.

We are issuing this AD to require actions to correct the unsafe condition on these products.

DATES: This AD becomes effective August 30, 2010.

As of April 26, 2010 (75 FR 17295, April 6, 2010), the Director of the Federal Register approved the incorporation by reference of Aircraft Industries, a.s. Mandatory Bulletin MB No.: L23/052a, dated March 2, 2010, listed in this AD.

ADDRESSES: You may examine the AD docket on the Internet at *http://www.regulations.gov* or in person at the Docket Management Facility, U.S. Department of Transportation, Docket Operations, M–30, West Building Ground Floor, Room W12–140, 1200 New Jersey Avenue, SE., Washington, DC 20590.

FOR FURTHER INFORMATION CONTACT: Greg Davison, Aerospace Engineer, FAA, Small Airplane Directorate, 901 Locust,

Room 301, ACE–112, Kansas City, Missouri 64106; telephone: (816) 329–4130; fax: (816) 329–4090.

SUPPLEMENTARY INFORMATION:

Discussion

We issued a notice of proposed rulemaking (NPRM) to amend 14 CFR part 39 to include an AD that would apply to the specified products. That NPRM was published in the **Federal Register** on April 29, 2010 (75 FR 22543), and proposed to supersede AD 2010–08–01, Amendment 39–16256 (75 FR 17295; April 6, 2010). That NPRM proposed to correct an unsafe condition for the specified products. The MCAI states that:

> Cracks on the stabilizer elevator inner hinges of seven L 23 SUPERBLANÍK sailplanes have been detected during an inspection.
>
> This condition, if not corrected, could result in no longer retaining the elevator in place and in jamming of the Pilot's elevator control system, and subsequent loss of elevator control.
>
> For the reasons stated above, this Emergency AD requires the inspection of the elevator inner hinges, and the accomplishment of the relevant corrective actions as necessary.

Comments

We gave the public the opportunity to participate in developing this AD. We received no comments on the NPRM or on the determination of the cost to the public.

Conclusion

We reviewed the available data and determined that air safety and the public interest require adopting the AD as proposed.

Differences Between This AD and the MCAI or Service Information

We have reviewed the MCAI and related service information and, in general, agree with their substance. But we might have found it necessary to use different words from those in the MCAI to ensure the AD is clear for U.S. operators and is enforceable. In making these changes, we do not intend to differ substantively from the information provided in the MCAI and related service information.

We might also have required different actions in this AD from those in the MCAI in order to follow FAA policies. Any such differences are highlighted in a **Note** within the AD.

Costs of Compliance

We estimate that this AD will affect 103 products of U.S. registry. We also estimate that it will take about 2 work-hours per product to comply with the basic requirements of this AD. The average labor rate is $85 per work-hour.

Based on these figures, we estimate the cost of this AD to the U.S. operators to be $17,510 or $170 per product.

In addition, we estimate that any necessary follow-on actions would take about 4 work-hours and require parts costing $500, for a cost of $840 per product. We have no way of determining the number of products that may need these actions.

Authority for This Rulemaking

Title 49 of the United States Code specifies the FAA's authority to issue rules on aviation safety. Subtitle I, section 106, describes the authority of the FAA Administrator. "Subtitle VII: Aviation Programs," describes in more detail the scope of the Agency's authority.

We are issuing this rulemaking under the authority described in "Subtitle VII, Part A, Subpart III, Section 44701: General requirements." Under that section, Congress charges the FAA with promoting safe flight of civil aircraft in air commerce by prescribing regulations for practices, methods, and procedures the Administrator finds necessary for safety in air commerce. This regulation is within the scope of that authority because it addresses an unsafe condition that is likely to exist or develop on products identified in this rulemaking action.

Regulatory Findings

We determined that this AD will not have federalism implications under Executive Order 13132. This AD will not have a substantial direct effect on the States, on the relationship between the national government and the States, or on the distribution of power and responsibilities among the various levels of government.

For the reasons discussed above, I certify this AD:

(1) Is not a "significant regulatory action" under Executive Order 12866;

(2) Is not a "significant rule" under DOT Regulatory Policies and Procedures (44 FR 11034, February 26, 1979); and

(3) Will not have a significant economic impact, positive or negative, on a substantial number of small entities under the criteria of the Regulatory Flexibility Act.

We prepared a regulatory evaluation of the estimated costs to comply with this AD and placed it in the AD Docket.

Examining the AD Docket

You may examine the AD docket on the Internet at *http://www.regulations.gov;* or in person at the Docket Management Facility between 9 a.m. and 5 p.m., Monday through Friday, except Federal holidays. The AD docket contains the NPRM, the regulatory evaluation, any comments received, and other information. The street address for the Docket Office (telephone (800) 647–5527) is in the **ADDRESSES** section. Comments will be available in the AD docket shortly after receipt.

List of Subjects in 14 CFR Part 39

Air transportation, Aircraft, Aviation safety, Incorporation by reference, Safety.

Adoption of the Amendment

■ Accordingly, under the authority delegated to me by the Administrator, the FAA amends 14 CFR part 39 as follows:

PART 39—AIRWORTHINESS DIRECTIVES

■ 1. The authority citation for part 39 continues to read as follows:

Authority: 49 U.S.C. 106(g), 40113, 44701.

§ 39.13 [Amended]

■ 2. The FAA amends § 39.13 by removing Amendment 39–16256 (75 FR 17295; April 6, 2010) and adding the following new AD:

2010–15–05 Aircraft Industries a.s.: Amendment 39–16371; Docket No. FAA–2010–0457; Directorate Identifier 2010–CE–019–AD.

Effective Date

(a) This airworthiness directive (AD) becomes effective August 30, 2010.

Affected ADs

(b) This AD supersedes AD 2010–08–01, Amendment 39–16256.

Applicability

(c) This AD applies to Aircraft Industries a.s. Model L 23 Super Blanik Gliders, all serial numbers, certificated in any category.

Subject

(d) Air Transport Association of America (ATA) Code 55: Stabilizers.

Reason

(e) The mandatory continuing airworthiness information (MCAI) states:

> Cracks on the stabilizer elevator inner hinges of seven L 23 SUPERBLANÍK sailplanes have been detected during an inspection.
>
> This condition, if not corrected, could result in no longer retaining the elevator in place and in jamming of the Pilot's elevator control system, and subsequent loss of elevator control.
>
> For the reasons stated above, this Emergency AD requires the inspection of the elevator inner hinges, and the accomplishment of the relevant corrective actions as necessary.

Actions and Compliance

(f) Unless already done, do the following actions:

(1) Before further flight as of April 6, 2010 (the effective date of AD 2010–08–01), inspect the elevator inner hinges on the stabilizer following paragraphs A.1., A.2., and A.4. of Aircraft Industries, a.s. Mandatory Bulletin MB No.: L23/052a, dated March 2, 2010.

(2) Repetitively thereafter at intervals not to exceed every 1,000 hours time-in-service, inspect the elevator inner hinges on the stabilizer following paragraphs A.1., A.2., and A.4. of Aircraft Industries, a.s. Mandatory Bulletin MB No.: L23/052a, dated March 2, 2010.

(3) If, as a result of the inspection required by paragraph (f)(1) or (f)(2) of this AD, you find any elevator inner hinge on the elevator is cracked or damaged, before further flight, replace it following paragraphs A.3. and A.4. of Aircraft Industries, a.s. Mandatory Bulletin MB No.: L23/052a, dated March 2, 2010.

FAA AD Differences

Note: This AD differs from the MCAI and/or service information as follows: No differences.

Other FAA AD Provisions

(g) The following provisions also apply to this AD:

(1) *Alternative Methods of Compliance (AMOCs):* The Manager, Standards Office, FAA, has the authority to approve AMOCs for this AD, if requested using the procedures found in 14 CFR 39.19. Send information to ATTN: Greg Davison, Aerospace Engineer, FAA, Small Airplane Directorate, 901 Locust, Room 301, Kansas City, Missouri 64106; telephone: (816) 329–4130; fax: (816) 329–4090. Before using any approved AMOC on any airplane to which the AMOC applies, notify your appropriate principal inspector (PI) in the FAA Flight Standards District Office (FSDO), or lacking a PI, your local FSDO.

(2) *Airworthy Product:* For any requirement in this AD to obtain corrective actions from a manufacturer or other source, use these actions if they are FAA-approved. Corrective actions are considered FAA-approved if they are approved by the State of Design Authority (or their delegated agent). You are required to assure the product is airworthy before it is returned to service.

(3) *Reporting Requirements:* For any reporting requirement in this AD, under the provisions of the Paperwork Reduction Act (44 U.S.C. 3501 *et seq.*), the Office of Management and Budget (OMB) has approved the information collection requirements and has assigned OMB Control Number 2120–0056.

Related Information

(h) Refer to MCAI EASA Emergency AD No.: 2010–0037–E, dated March 8, 2010; and Aircraft Industries, a.s. Mandatory Bulletin MB No.: L23/052a, dated March 2, 2010, for related information.

Material Incorporated by Reference

(h) You must use Aircraft Industries, a.s. Mandatory Bulletin MB No.: L23/052a, dated March 2, 2010, to do the actions required by this AD, unless the AD specifies otherwise.

(1) On April 26, 2010 (75 FR 17295, April 6, 2010), the Director of the Federal Register previously approved the incorporation by reference of Aircraft Industries, a.s. Mandatory Bulletin MB No.: L23/052a, dated March 2, 2010.

(2) For service information identified in this AD, contact Aircraft Industries, a.s.–Nazáhonech1177, 686 04 Kunovice, Czech Republic; telephone: +420 572 817 660; fax: +420 572 816 112; e-mail: *ots@let.cz;* Internet: *http://www.let.cz.*

(3) You may review copies of the service information incorporated by reference for this AD at the FAA, Central Region, Office of the Regional Counsel, 901 Locust, Kansas City, Missouri 64106. For information on the availability of this material at the Central Region, call (816) 329–3768.

(4) You may also review copies of the service information incorporated by reference for this AD at the National Archives and Records Administration (NARA). For information on the availability of this material at NARA, call (202) 741–6030, or go to: *http://www.archives.gov/federal_register/code_of_federal_regulations/ibr_locations.html.*

Issued in Kansas City, Missouri, on July 15, 2010.

Kim Smith,

Manager, Small Airplane Directorate, Aircraft Certification Service.

[FR Doc. 2010–18022 Filed 7–23–10; 8:45 am]

BILLING CODE 4910–13–P

DEPARTMENT OF TRANSPORTATION

Federal Aviation Administration

14 CFR Part 39

[Docket No. FAA–2010–0122; Directorate Identifier 2009–CE–067–AD; Amendment 39–16338; AD 2010–13–07]

RIN 2120–AA64

Airworthiness Directives; Piper Aircraft, Inc. Models PA–32R–301T and PA–46–350P Airplanes

AGENCY: Federal Aviation Administration (FAA), DOT.

ACTION: Final rule; correction.

SUMMARY: This document makes a correction to AD 2010–13–07, which was published in the **Federal Register** on June 23, 2010 (75 FR 35619), and applies to certain Piper Aircraft, Inc. Models PA–32R–301T and PA–46–350P airplanes. AD 2010–13–07 requires you to replace V-band exhaust couplings, part number (P/N) Lycoming 40D21162–340M or Eaton/Aeroquip 55677–340M with an improved design Eaton/Aeroquip P/N NH1009399–10 or Lycoming P/N 40D23255–340M. In the Summary and Discussion sections of the published AD, we incorrectly stated that the AD requires replacing any spot-welded, V-band exhaust coupling with a riveted, V-band exhaust coupling instead of stating the specific P/N to be replaced. Also, in the Cost of Compliance section, we incorrectly stated that Model PA–32R–301T airplanes, instead of Model PA–46–350P airplanes, are equipped with two of the affected V-band clamps. We are issuing this document to help eliminate any confusion that this AD may have created.

DATES: The effective date of this correction is July 26, 2010. The effective date of this AD (2010–13–07) remains July 28, 2010.

FOR FURTHER INFORMATION CONTACT: Darby Mirocha, Aerospace Engineer, FAA, Atlanta Aircraft Certification Office (ACO), 1701 Columbia Avenue, College Park, Georgia 30337; telephone: (404) 474–5573; fax: (404) 474–5606; e-mail: *darby.mirocha@faa.gov.*

SUPPLEMENTARY INFORMATION:

Discussion

On June 14, 2010, the FAA issued AD 2010–13–07, Amendment 39–16338 (75 FR 35619, June 23, 2010), which applies to certain Piper Aircraft, Inc. Models PA–32R–301T and PA–46–350P airplanes. AD 2010–13–07 requires you to replace V-band exhaust couplings, P/N Lycoming 40D21162–340M or Eaton/Aeroquip 55677–340M with an improved design Eaton/Aeroquip P/N NH1009399–10 or Lycoming P/N 40D23255–340M.

In the published AD, we incorrectly stated in the the Summary and Discussion sections that the AD requires replacing any spot-welded, V-band exhaust coupling with a riveted, V-band exhaust coupling instead of stating the specific P/N to be replaced. Also, in the Cost of Compliance section, we incorrectly stated which of the affected model airplanes are equipped with two of the affected V-band clamps.

Need for the Correction

This correction is needed to help eliminate any confusion that this AD may have created.

Correction of Publication

Accordingly, the publication of June 23, 2010 (75 FR 35619), of Amendment 39–16338; AD 2010–13–07, which was the subject of FR Doc. 2010–14991, is corrected as follows:

On page 35619, under the heading "Summary," in line 5, change the word "any" to "specific."

On page 35620, under the heading "Discussion," in line 11, change the word "any" to "specific."

On page 35620, under the heading "Comments," under the subheading "Comment Issue No. 2: Correct the Cost of Compliance," in paragraph 3, change the second sentence to "After further research, we determined that Model PA–46–350P (Mirage) has two of the affected V-Band clamps installed, and Model PA–32R–301T (Saratoga II TC) has one."

On page 35620, under the heading "Costs of Compliance," change the entire section to read as follows:

"We estimate that this AD affects 596 airplanes in the U.S. registry provided they have the affected V-band exhaust coupling installed.

We estimate the following costs to do the replacement for Model PA–32R–301T airplanes. These airplanes have one V-band clamp installed:

Labor cost	Parts cost	Total cost per Model PA–32R–301T airplane
2 work-hours × $85 per hour = $170	$714	$884

We estimate the following costs to do the replacement for Model PA–46–350P airplanes. These airplanes have two V-band clamps installed:

Labor cost	Parts cost	Total cost per Model PA–46–350P airplane
2 work-hours per V-band clamp. 2 clamps per airplane: 4 work-hours × $85 per hour = $340.	$714 per V-band clamp. $714 × 2 = $1,428.	$1,768

The effective date of this AD (2010–13–07) remains July 28, 2010.

Issued in Kansas City, Missouri, on July 15, 2010.

Kim Smith,

Manager, Small Airplane Directorate, Aircraft Certification Service.

[FR Doc. 2010–18023 Filed 7–23–10; 8:45 am]

BILLING CODE 4910–13–P

DEPARTMENT OF TRANSPORTATION

Federal Aviation Administration

14 CFR Part 73

[Docket No. FAA–2008–1261; Airspace Docket No. 06–ASO–18]

Amendment and Establishment of Restricted Areas and Other Special Use Airspace, Avon Park Air Force Range, FL

AGENCY: Federal Aviation Administration (FAA), DOT.

ACTION: Final rule, correction.

SUMMARY: This action makes minor corrections to the geographic coordinates of restricted areas R–2901B, R–2910J, R–2901K, R–2901L and R–2901N, Avon Park, FL, in a final rule published in the **Federal Register** on Monday, May 24, 2010. The National Aeronautical Navigation Services Office requested these adjustments be made to better align the restricted areas.

DATES: Effective date 0901 UTC, July 29, 2010. The Director of the Federal Register approves this incorporation by reference action under 1 CFR part 51, subject to the annual revision of FAA Order 7400.9 and publication of conforming amendments.

FOR FURTHER INFORMATION CONTACT: Paul Gallant, Airspace and Rules Group, Office of System Operations Airspace and AIM, Federal Aviation Administration, 800 Independence Avenue, SW., Washington, DC 20591; telephone: (202) 267–8783.

SUPPLEMENTARY INFORMATION:

History

On May 24, 2010, a final rule was published in the **Federal Register** (75 FR 28752), Airspace Docket No. 06–ASO–18, to modify the special use airspace at the Avon Park Air Force Range in Florida. As a result of further review of the latitude/longitude coordinates for the Avon Park Air Force Range restricted areas, the Aeronautical Navigation Services Office (formerly the National Aeronautical Charting Office) determined that a minor refinement was needed for two points in several restricted area descriptions. The correction adjusts the longitude coordinate by six seconds for one point and by two seconds for the second point. Specifically, the longitude point in lat. 27°32′31″ N., long. 81°07′ 29″ W., is corrected to read "long. 81°07′23″ W.", and; the longitude point in lat. 27°29′31″ N., long. 81°05′29″ W., is corrected to read "long. 81°05′27″ W"

List of Subjects in 14 CFR Part 73

Airspace, Prohibited Areas, Restricted Areas.

Correction to Final Rule

■ Accordingly, pursuant to the authority delegated to me, the legal descriptions of R–2901B, R–2901J, R–2901K, R–2901L, and R–2901N, as published in the **Federal Register** on May 24, 2010 (75 FR 28752), Airspace Docket 06–ASO–18, and incorporated by reference in 14 CFR part 73, is corrected as follows:

§ 73.29 [Amended]

On page 28755, column 2, correct two coordinates for restricted areas R–2901B and R–2910J; and on page 28756, columns 1 and 2, correct two coordinates for restricted areas R–2901K, R–2901L and R–2901N, Avon Park, FL, to read as follows:

* * * * *

R–2901B Avon Park, FL [Corrected]

By removing lat. 27°32′31″ N., long. 81°07′29″ W., and substituting lat. 27°32′21″ N., long. 81°07′23″ W.; and by removing lat. 27°29′31″ N., long. 81°05′29″ W., and substituting lat. 27°29′31″ N., long. 81°05′27″ W.

R–2901J Avon Park, FL [Corrected]

By removing lat. 27°32′31″ N., long. 81°07′29″ W., and substituting lat. 27°32′21″ N., long. 81°07′23″ W.; and by removing lat. 27°29′31″ N., long. 81°05′29″ W., and

substituting lat. 27°29′31″ N., long. 81°05′27″ W.

R–2901K Avon Park, FL [Corrected]

By removing lat. 27°32′31″ N., long. 81°07′29″ W., and substituting lat. 27°32′21″ N., long. 81°07′23″ W.; and by removing lat. 27°29′31″ N., long. 81°05′29″ W., and substituting lat. 27°29′31″ N., long. 81°05′27″ W.

R–2901L Avon Park, FL [Corrected]

By removing lat. 27°32′31″ N., long. 81°07′29″ W., and substituting lat. 27°32′21″ N., long. 81°07′23″ W.; and by removing lat. 27°29′31″ N., long. 81°05′29″ W., and substituting lat. 27°29′31″ N., long. 81°05′27″ W.

R–2901N Avon Park, FL [Corrected]

By removing lat. 27°32′31″ N., long. 81°07′29″ W., and substituting lat. 27°32′21″ N., long. 81°07′23″ W.; and by removing lat. 27°29′31″ N., long. 81°05′29″ W., and substituting lat. 27°29′31″ N., long. 81°05′27″ W.

* * * * *

Issued in Washington, DC, on July 13, 2010.

Edith V. Parish,

Manager, Airspace and Rules Group.

[FR Doc. 2010–17945 Filed 7–23–10; 8:45 am]

BILLING CODE P

DEPARTMENT OF TRANSPORTATION

Federal Aviation Administration

14 CFR Part 73

[Docket No. FAA–2007–28633; Airspace Docket No. 07–ASW–7]

RIN 2120–AA66

Establishment of Restricted Area R–3405; Sullivan, IN

AGENCY: Federal Aviation Administration (FAA), DOT.

ACTION: Final rule.

SUMMARY: This action establishes Restricted Area R–3405 at Sullivan, IN, to support deep-water electronic, ordnance and pyrotechnics testing by the U.S. Navy. The FAA is taking this action to protect nonparticipating aircraft from a tethered aerostat balloon used to deploy radar, electro-optic, camera, and other sensor packages at Naval Support Activity (NSA) Crane's Glendora Lake Test Facility.

DATES: Effective date 0901 UTC, September 23, 2010. The Director of the Federal Register approves this incorporation by reference action under 1 CFR part 51, subject to the annual revision of FAA Order 7400.9 and publication of conforming amendments.

FOR FURTHER INFORMATION CONTACT: Colby Abbott, Airspace and Rules Group, Office of System Operations Airspace and AIM, Federal Aviation Administration, 800 Independence Avenue, SW., Washington, DC 20591; telephone: (202) 267–8783.

SUPPLEMENTARY INFORMATION:

History

On Friday, August 31, 2007, the FAA published in the **Federal Register** a notice of proposed rulemaking (NPRM) to establish restricted Area R–3405 near Sullivan, IN (72 FR 50300). Interested parties were invited to participate in this rulemaking effort by submitting written comments on the proposal. No comments were received. The U.S. Navy lowered the proposed ceiling from 2,000 feet MSL to 1,600 feet MSL after a FAA study found that the proposed establishment of restricted area R–3405, when active, would impact aircraft operations at Sullivan Country Airport, located near the test facility. With the exception of editorial changes, and the change described above, this rule is the same as that proposed in the NPRM.

The Rule

This action amends Title 14 Code of Federal Regulations (14 CFR) part 73 by establishing restricted area R–3405 over an area near Sullivan, IN. This restricted area covers less than 1 square nautical mile and extends from the surface up to and including 1,600 feet MSL, and will ensure flight safety by separating non-participating aircraft from tethered aerostat balloon operations conducted by the NSA Crane Lake Glendora Test Facility.

Section 73.34 of Title 14 CFR part 73 was republished in FAA Order 7400.8S, effective February 16, 2010.

The FAA has determined that this regulation only involves an established body of technical regulations for which frequent and routine amendments are necessary to keep them operationally current. Therefore, this regulation: (1) Is not a "significant regulatory action" under Executive Order 12866; (2) is not a "significant rule" under Department of Transportation (DOT) Regulatory Policies and Procedures (44 FR 11034; February 26, 1979); and (3) does not warrant preparation of a regulatory evaluation as the anticipated impact is so minimal. Since this is a routine matter that will only affect air traffic procedures and air navigation, it is certified that this rule, when promulgated, will not have a significant economic impact on a substantial number of small entities under the criteria of the Regulatory Flexibility Act.

This rulemaking is promulgated under the authority described in Subtitle VII, Part A, Subpart I, Section 40103. Under that section, the FAA is charged with prescribing regulations to assign the use of the airspace necessary to ensure the safety of aircraft and the efficient use of airspace. This regulation is within the scope of that authority as it establishes restricted airspace at Sullivan, IN.

Environmental Review

Pursuant to Section 102(2) of the National Environmental Policy Act of 1969 (NEPA), the Council on Environmental Quality (CEQ) regulations implementing NEPA (40 CFR Parts 1500–1508), and other applicable law, the U.S. Navy prepared and published a Final Environmental Assessment (FEA) in June 2008 that analyzed the potential for environmental impacts associated with the proposed NSA Crane and Naval Surface Warfare Center (NSWC) Glendora Lake Test Facility requirements. In July 2009, the U.S. Navy issued a Finding of No Significant Impact (FONSI) based on the results of the FEA. In accordance with applicable CEQ regulations (40 CFR 1501.6) and the Memorandum of Understanding (MOU) between FAA and Department of Defense (DOD) dated October 2005, the FAA was a cooperating agency on the FEA.

The FAA has conducted an independent review of the FEA and is adopting the FEA for this action pursuant to 40 CFR 1506.3(a) and (c) and has issued an Adoption of FEA and FONSI/Record of Decision (ROD) dated May 2010. This final rule, which establishes restricted area R–3405, will not result in significant environmental impacts. A copy of the FAA Adoption of FEA and FONSI/ROD has been placed in the public docket for this rulemaking.

List of Subjects in 14 CFR Part 73

Airspace, Prohibited areas, Restricted areas.

Adoption of the Amendment

■ In consideration of the foregoing, the Federal Aviation Administration amends 14 CFR part 73 as follows:

PART 73—SPECIAL USE AIRSPACE

■ 1. The authority citation for part 73 continues to read as follows:

Authority: 49 U.S.C. 106(g), 40103, 40113, 40120; E.O. 10854, 24 FR 9565, 3 CFR, 1959–1963 Comp., p. 389.

§ 73.34 [Amended]

■ 2. § 73.34 is amended as follows:

* * * * *

R–3405 Sullivan, IN [New]

Boundaries. Beginning at lat. 39°07′41″ N., long. 87°22′02″ W.; to lat. 39°07′41″ N., long. 87°21′29″ W.; to lat. 39°07′39″ N., long. 87°21′29″ W.; to lat. 39°07′39″ N., long. 87°21′26″ to lat. 39°07′41″ N., long. 87°21′25″ W.; to lat. 39°07′41″ N., long. 87°21′12″ W.; to lat. 39°07′00″ N., long. 87°21′08″ W.; to lat. 39°07′00″ N., long. 87°21′46″ W.; to lat. 39°06′36″ N., long. 87°21′47″ W.; to lat. 39°06′36″ N., long. 87°22′03″ W.; to the point of beginning.

Designated altitudes. Surface up to and including 1,600 feet MSL.

Times of Designation. By NOTAM 24 hours in advance.

Controlling Agency. FAA, Terre Haute ATCT.

Using Agency. U.S. Navy, Naval Support Activity Crane, IN.

Issued in Washington, DC, on July 15, 2010.

Edith V. Parish,

Manager, Airspace and Rules Group.

[FR Doc. 2010–17937 Filed 7–23–10; 8:45 am]

BILLING CODE 4910–13–P

DEPARTMENT OF ENERGY

Federal Energy Regulatory Commission

18 CFR Parts 2, 3b, 4, 5, 8, 9, 11, 16, 24, 32, 33, 34, 35, 39, 45, 46, 152, 153, 156, 157, 385, and 388

[Docket No. RM10–26–000; Order No. 737]

Technical Corrections to Commission's Regulations

Issued July 14, 2010.

AGENCY: Federal Energy Regulatory Commission.

ACTION: Final rule; technical correction.

SUMMARY: The Commission is issuing this Final Rule to make minor changes to its regulations. This Final Rule revises a number of references that have become outdated for various reasons. Generally, these changes add or delete language in the current regulations that: Eliminate obsolete information; incorporate by reference updated electronic filing options; and correct incorrect cites.

DATES: *Effective Date:* The rule will become effective July 26, 2010.

FOR FURTHER INFORMATION CONTACT:

Wilbur Miller, Federal Energy Regulatory Commission, 888 First Street, NE., Washington, DC 20426, (202) 502–8953.

Christopher Cook, Federal Energy Regulatory Commission, 888 First Street, NE., Washington, DC 20426, (202) 502–8102.

SUPPLEMENTARY INFORMATION:

Before Commissioners: Jon Wellinghoff, Chairman; Marc Spitzer, Philip D. Moeller, and John R. Norris.

Technical Corrections to Commission's Regulations

Docket No. RM10–26–000

Order No. 737

Final Rule

Issued July 14, 2010.

I. Introduction

1. This Final Rule corrects a number of the Commission's regulations to bring them up to date or make them consistent with other provisions. The revisions are intended to be ministerial and/or informational in nature, as explained below.

II. Discussion

A. Minor Revisions Correcting Outdated Nomenclature, Addresses, and Provisions

2. Parts 3b, 46, and 152 of Title 18 of the *Code of Federal Regulations,* this Final Rule corrects all references, where appropriate, to the "FPC" (Federal Power Commission; the predecessor to the Federal Energy Regulatory Commission) to read "FERC" or "Federal Energy Regulatory Commission." Also in these sections, multiple obsolete or outdated references relating to the FERC organizational structure are replaced or updated as appropriate. This Final Rule also revises incorrect references to a former FERC address and deletes regulatory provisions that no longer exist. This Final Rule also removes certain nomenclature to be consistent with other provisions of our regulations. *See* new 18 CFR 4.12 and 4.22 (2010).

B. Minor Revisions Incorporating by Reference Web Site Language and Removing References to Paper Copies as Part of the Commission's Filing Procedures

3. For Parts 2, 4, 5, 8, 11, 16, 24, 32, 34, 45, 46, 152, 153, 156, 385, and 388, this Final Rule incorporates by reference the "how to file" requirements located on the Commission's Web site in order to reflect our current electronic filing options. These filing options are routinely modified to capture information and technology updates as well as updates to general filing procedures. In Part 2, a reference to multiple paper copies is replaced by a reference to updated filing procedures as posted on the Commission Web site. FERC now has paperless electronic filing options for nearly all documents submitted to the Commission and references to a certain number of paper copies have been revised.[1] Part 4 is revised to remove multiple references to "certified mail," which is no longer a requirement. *See* new 18 CFR 4.4; 4.12; 4.22 (2010). Parts 9 and 156 are revised to remove a reference to paper copies as part of filing procedures and Part 157 is revised to remove a section related to outdated file formats. Part 388 replaces language that requires a "written statement" with "statement." *See* new 18 CFR 3b.203(b) (2010).

C. Minor Revisions Removing Obsolete References to Filing Fees

4. Parts 32, 34, 45, 152, 156, and 157 are all revised by removing language referencing filing fees. These filing fees are no longer required by the Commission.

D. Minor Revisions Removing Obsolete References to Form of Notice

5. Parts 33, 34, and 39 are all revised by removing language referencing forms of notice. The notices for these filings are now included in the Combined Notice Process.

E. Minor Revisions Replacing Incorrect Order Number References

6. To correct prior typographical errors, Part 35 is revised by replacing multiple references to "Order 741" with "Order 714."

III. Information Collection Statement

7. The Office of Management and Budget's (OMB) regulations require that OMB approve certain information collection requirements imposed by agency rule. 5 CFR Part 1320 (2010). This Final Rule contains no information reporting requirements, and is not subject to OMB approval.

IV. Environmental Analysis

8. The Commission is required to prepare an Environmental Assessment or an Environmental Impact Statement for any action that may have a significant adverse effect on the human environment.[2] This Final Rule is not such an action, and does not represent a major federal action having a significant adverse effect on the human environment under the Commission's regulations implementing the National Environmental Policy Act. Part 380 of the Commission's regulations lists exemptions to the requirement that an Environmental Analysis or Environmental Impact Statement be done. Included is an exemption for

[1] Although electronic submissions are encouraged, the Commission has posted a Quick Reference Guide to Paper Submissions at *http://www.ferc.gov/docs-filing/efiling/filing.pdf.*

[2] *Regulations Implementing the National Environmental Policy Act,* Order No. 486, 52 FR 47897 (Dec. 17, 1987), FERC Stats. & Regs., Regulations Preambles 1986–1990 ¶ 30,783 (1987).

procedural, ministerial or internal administrative actions. 18 CFR 380.4(1) and (5). This Final Rule is therefore exempt.

V. Regulatory Flexibility Act Certification

9. The Regulatory Flexibility Act of 1980 (RFA) [3] generally requires a description and analysis of final rules that will have significant economic impact on a substantial number of small entities. This Final Rule concerns a matter of internal agency procedure and the Commission therefore certifies that it will not have such an impact. An analysis under the RFA is not required.

VI. Document Availability

10. In addition to publishing the full text of this document in the **Federal Register**, the Commission provides all interested persons an opportunity to view and/or print the contents of this document via the Internet through the Commission's Web site (*http://www.ferc.gov*) and in the Commission's Public Reference Room during normal business hours (8:30 a.m. to 5 p.m. Eastern time) at 888 First Street, NE., Room 2A, Washington, DC 20426.

11. From the Commission's Web site on the Internet, this information is available in the Commission's document management system, eLibrary. The full text of this document is available on eLibrary in PDF and Microsoft Word format for viewing, printing, and/or downloading. To access this document in eLibrary, type the docket number excluding the last three digits of this document in the docket number field.

12. User assistance is available for eLibrary and the Commission's Web site during normal business hours from FERC Online Support at 1–866–208–3676 (toll free) or (202) 502–6652 (e-mail at *FERCOnlineSupport@FERC.gov*), or the Public Reference Room at (202) 502–8371, TTY 202–502–8659 (e-mail at *public.referenceroom@ferc.gov*).

VII. Effective Date and Congressional Notification

13. These regulations are effective on the date of publication in the **Federal Register**. In accordance with 5 U.S.C. 553(d)(3) (2006), the Commission finds that good cause exists to make this Final Rule effective immediately. It makes minor revisions with respect to matters of internal operations and is unlikely to affect the rights of persons appearing before the Commission. There is therefore no reason to make this rule effective at a later time.

[3] 5 U.S.C. 601–12.

14. The provisions of 5 U.S.C. 801 regarding Congressional review of final rules do not apply to this Final Rule, because this Final Rule concerns agency procedure and practice and will not substantially affect the rights of non-agency parties.

15. The Commission is issuing this Final Rule without a period for public comment. Under 5 U.S.C. 553(b), notice and comment procedures are unnecessary where a rulemaking concerns only agency procedure and practice, or where the agency finds that notice and comment is unnecessary. This rule concerns only matters of agency procedure and will not significantly affect regulated entities or the general public.

List of Subjects

18 CFR Part 2

Administrative practice and procedure, Electric power, Natural gas, Pipelines, Reporting and recordkeeping requirements.

18 CFR Part 3b

Privacy.

18 CFR Part 4

Administrative practice and procedure, Electric power, Reporting and recordkeeping requirements.

18 CFR Part 5

Administrative practice and procedure, Electric power, Reporting and recordkeeping requirements.

18 CFR Part 8

Electric power, Recreation and recreation areas, Reporting and recordkeeping requirements.

18 CFR Part 9

Electric power, Reporting and recordkeeping requirements.

18 CFR Part 11

Dams, Electric power, Indian lands, Public lands, Reporting and recordkeeping requirements.

18 CFR Part 16

Administrative practice and procedure, Electric power, Reporting and recordkeeping requirements.

18 CFR Part 24

Electric power, Reporting and recordkeeping requirements.

18 CFR Part 32

Electric utilities.

18 CFR Part 33

Electric utilities, Reporting and recordkeeping requirements, Securities.

18 CFR Part 34

Electric power, Reporting and recordkeeping requirements.

18 CFR Part 35

Electric power rates, Electric utilities, Reporting and recordkeeping requirements.

18 CFR Part 39

Administrative practice and procedure.

18 CFR Part 45

Electric utilities, Reporting and recordkeeping requirements.

18 CFR Part 46

Antitrust, Electric utilities, Holding companies, Reporting and recordkeeping requirements.

18 CFR Part 152

Natural gas, Reporting and recordkeeping requirements.

18 CFR Part 153

Exports, Imports, Natural gas, Reporting and recordkeeping requirements.

18 CFR Part 156

Administrative practice and procedure, Natural gas, Reporting and recordkeeping requirements.

18 CFR Part 157

Administrative practice and procedure, Natural gas, Reporting and recordkeeping requirements, Uniform system of accounts.

18 CFR Part 385

Administrative practice and procedure, Electric power, Penalties, Pipelines, Reporting and recordkeeping requirements.

18 CFR Part 388

Confidential business information, Freedom of information.

By the Commission.

Kimberly D. Bose,

Secretary.

■ In consideration of the foregoing, the Commission is amending parts 2, 3b, 4, 5, 8, 9, 11, 16, 24, 32, 33, 34, 35, 39, 45, 46, 152, 153, 156, 157, 385, and 388 of Chapter I, Title 18, *Code of Federal Regulations,* by making the following technical corrections:

PART 2—GENERAL POLICY AND INTERPRETATIONS

■ 1. The authority citation for Part 2 continues to read as follows:

Authority: (Secs. 308, 309; 49 Stat. 858; 16 U.S.C. 825g, 825h; secs. 15, 16; 52 Stat. 829,

830; 15 U.S.C. 717n, 717o) [Order 211, 24 FR 1345, Feb. 21, 1959, as amended by Order 463, 37 FR 28054, Dec. 20, 1972; 38 FR 3192, Feb. 2, 1973; 44 FR 34941, June 18, 1979; 45 FR 21224, Apr. 1, 1980; Order 541, 57 FR 21733, May 22, 1992; Order 603, 64 FR 26603, May 14, 1999; Order 2002, 68 FR 51115, Aug. 25, 2003]

§ 2.1 [Amended]

■ 2. In § 2.1, paragraphs (a) introductory text and (b), the phrase "mailing" is removed and the phrase "mailing or e-mailing" is added in its place.

§ 2.9 [Amended]

■ 3. In § 2.9, paragraph (b), the phrase "the Federal Power Commission, Office of Public Information, Washington, DC 20426" is removed and the phrase "the Federal Energy Regulatory Commission, Washington, DC 20426" is added in its place.

§ 2.13 [Amended]

■ 4. In § 2.13, paragraph (b), the phrase "the Office of Public Information, Federal Power Commission, Washington, DC 20426" is removed and the phrase "the Federal Energy Regulatory Commission, Washington, DC 20426" is added in its place.

§ 2.55 [Amended]

■ 5. In § 2.55, paragraph (b)(4), the phrase "on electronic media pursuant to § 385.2011 of this chapter, accompanied by 7 paper copies" is removed and the phrase "in accordance with filing procedures posted on the Commission's Web site at *http://www.ferc.gov*." is added in its place.

§ 2.57 [Amended]

■ 6. In § 2.57, in the first sentence, the phrase "Federal Power Commission" is removed and the phrase "Federal Energy Regulatory Commission" is added in its place.

PART 3b—COLLECTION, MAINTENANCE, USE, AND DISSEMINATION OF RECORDS OF IDENTIFIABLE PERSONAL INFORMATION

■ 7. The authority citation for Part 3b continues to read as follows:

Authority: Federal Power Act, as amended, sec. 309, 49 Stat. 858–859 (16 U.S.C. 825h); Natural Gas Act, as amended, sec. 16, 52 Stat. 830 (15 U.S.C. 717o); and Pub. L. 93–579 (88 Stat. 1896).

§ 3b.1 [Amended]

■ 8. In § 3b.1, in the first sentence, the phrase "Federal Power Commission's" is removed and the phrase "Federal Energy Regulatory Commission's" is added in its place.

§ 3b.203 [Amended]

■ 9–10. In § 3b.203, paragraph (b), the acronym "FPC" is removed and the acronym "FERC" is added in its place, and the phrase "specifically 18 CFR 3.207(e) and 3.228(d)" is removed, and in paragraph (c), the phrase "Director, Office of Personnel Programs" is removed and the phrase "Director, Human Resources Division" is added in its place.

§ 3b.221 [Amended]

■ 11. In § 3b.221, paragraph (d)(2), the phrase "Federal Power Commission, 825 North Capitol Street, NE., Washington, DC 20426" is removed and the phrase "Federal Energy Regulatory Commission, 888 First Street, NE., Washington, DC 20426" is added in its place.

§ 3b.224 [Amended]

■ 12. In § 3b.224, paragraph (c)(2), the phrase "Federal Power Commission, 825 North Capitol Street, NE., Washington, DC 20426" is removed and the phrase "Federal Energy Regulatory Commission, 888 First Street, NE., Washington, DC 20426" is added in its place.

PART 4—LICENSES, PERMITS, EXEMPTIONS, AND DETERMINATION OF PROJECT COSTS

■ 13. The authority citation for Part 4 continues to read as follows:

Authority: 16 U.S.C. 791a–825r, 2601–2645; 42 U.S.C. 7101–7352.

§ 4.4 [Amended]

■ 14. In § 4.4, the phrase "by certified mail" is removed, and the phrase "or if the States has not regulatory agency" is removed and the phrase "or if the State has no regulatory agency" is added in its place.

§ 4.12 [Amended]

■ 15. In § 4.12, the phrase "by certified mail" is removed.

§ 4.22 [Amended]

■ 16. In § 4.22, the phrase "by certified mail" is removed.

■ 17–19. In § 4.32:

a. In paragraph (b)(1), the phrase "must submit to the Commission's Secretary for filing an original and eight copies of the application or petition" is removed and the phrase "must submit the application or petition to the Secretary of the Commission in accordance with filing procedures posted on the Commission's Web site at *http://www.ferc.gov*." is added in its place;

b. In paragraph (b)(2), the phrase "must submit to the Commission's Secretary for filing an original and eight copies of the application" is removed and the phrase "must submit the application to the Secretary of the Commission in accordance with filing procedures posted on the Commission's Web site at *http://www.ferc.gov*." is added in its place; and

c. In paragraph (e)(1)(i), the fifth sentence is revised to read as follows:

§ 4.32 Acceptance for filing or rejection; information to be made available to the public; requests for additional studies.

* * * * *

(e) * * *

(1) * * *

(i) * * * Deficiencies must be corrected by submitting the specified materials or information to the Secretary of the Commission within the time specified in the notification of deficiency in accordance with filing procedures posted on the Commission's Web site at *http://www.ferc.gov.*

* * * * *

PART 5—INTEGRATED LICENSE APPLICATION PROCESS

■ 20. The authority citation for Part 5 continues to read as follows:

Authority: 16 U.S.C. 791a–825r, 2601–2645; 42 U.S.C. 7101–7352.

■ 21. In § 5.3, revise paragraph (d)(2)(vi) to read as follows:

§ 5.3 Process selection.

* * * * *

(d) * * *

(2) * * *

(vi) State that respondents must submit comments to the Secretary of the Commission in accordance with filing procedures posted on the Commission's Web site at *http://www.ferc.gov.*

* * * * *

§ 5.5 [Amended]

■ 22. In § 5.5, paragraph (b) introductory text, the phrase "with the Commission pursuant to the requirements of Subpart T of Part 385 of this chapter an original and eight copies of a letter" is removed and the phrase "with the Secretary of the Commission in accordance with filing procedures posted on the Commission's Web site at *http://www.ferc.gov,* a letter" is added in its place.

§ 5.6 [Amended]

■ 23. In § 5.6, paragraph (a)(1), the phrase "with the Commission an original and eight copies" is removed and the phrase "with the Secretary of the Commission in accordance with filing procedures posted on the Commission's Web site at *http://www.ferc.gov*" is added in its place.

PART 8—RECREATIONAL OPPORTUNITIES AND DEVELOPMENT AT LICENSED PROJECTS

■ 24. The authority citation for Part 8 continues to read as follows:

Authority: 5 U.S.C. 551–557; 16 U.S.C. 791a–825r; 42 U.S.C. 7101–7352.

§ 8.11 [Amended]

■ 25. In § 8.11, paragraph (a)(1), the phrase "shall prepare with respect to each development within such project an original and two copies of FERC Form No. 80 prescribed by § 141.14 of this chapter and submit them to a the Commission pursuant to the requirements in the General Information portion of the form" is removed and the phrase "shall prepare with respect to each development within such project a FERC Form No. 80 and submit them to the Secretary of the Commission in accordance with filing procedures posted on the Commission's Web site at *http://www.ferc.gov*." is added in its place.

PART 9—TRANSFER OF LICENSE OR LEASE OF PROJECT PROPERTY

■ 26. The authority citation for Part 9 continues to read as follows:

Authority: Sec. 8, 41 Stat. 1068, sec. 309, 49 Stat. 858; 16 U.S.C. 801, 825h; Pub. L. 96—511, 94 Stat. 2812 (44 U.S.C. 3501 *et seq.)*

■ 27. Section 9.10 is revised to read as follows:

§ 9.10 Filing.

Any licensee desiring to lease the project property covered by a license or any part thereof, where the lessee is granted the exclusive occupancy, possession, or use of project works for purposes of generating, transmitting, or distributing power, and the person, association, or corporation, State, or municipality desiring to acquire the project property by lease, must file the proposed lease together with the application in accordance with § 4.32(b)(1) of this chapter. The application and the Commission's action on it will, in general, be subject to the provisions of §§ 9.1 through 9.3.

PART 11—ANNUAL CHARGES UNDER PART I OF THE FEDERAL POWER ACT

■ 28. The authority citation for Part 11 continues to read as follows:

Authority: 16 U.S.C. 791a–825r; 42 U.S.C. 7101–7352.

■ 29. In § 11.6(i), the second sentence is revised to read as follows:

§ 11.6 Exemption of State and municipal licensees and exemptees.

* * * * *

(i) * * * The application must be filed with the Secretary of the Commission in accordance with filing procedures posted on the Commission's Web site at *http://www.ferc.gov* within the time allowed (by § 11.20) for the payment of the annual charges." * * *

PART 16—PROCEDURES RELATING TO TAKEOVER AND RELICENSING OF LICENSED PROJECTS

■ 30. The authority citation for Part 16 continues to read as follows:

Authority: 16 U.S.C. 791a–825r; 42 U.S.C. 7101–7352.

§ 16.6 [Amended]

■ 31. In§ 16.6(b) introductory text, the phrase "must file with the Commission an original and fourteen copies of" is removed and the phrase "must file with the Secretary of the Commission in accordance with filing procedures posted on the Commission's Web site at *http://www.ferc.gov*" is added in its place.

PART 24—DECLARATION OF INTENTION

■ 32. The authority citation for Part 24 continues to read as follows:

Authority: 16 U.S.C. 791a–825r; 44 U.S.C. 3501 *et seq.* ; 42 U.S.C. 7101–7352.

■ 33. In § 24.1, revise the first sentence to read as follows:

§ 24.1 Filing.

A declaration of intention under the provisions of section 23(b) of the Act shall be filed with the Secretary of the Commission in accordance with filing procedures posted on the Commission's Web site at *http://www.ferc.gov.* * * * * * * * * *

PART 32—INTERCONNECTION OF FACILITIES

■ 34. The authority citation for Part 32 is revised to read as follows:

Authority: 42 U.S.C. 7101–7352; E.O. No. 12,009, 3 CFR 1978 Comp., p. 142; 31 U.S.C. 9701; 16 U.S.C. 791a–825r; 16 U.S.C. 2601–2645 (1988).

■ 35. In § 32.1, the section heading is revised as set forth below, and the phrase "shall be accompanied by the fee prescribed in Part 381 of this chapter and" is removed from the introductory text.

§ 32.1 Contents of the application.

* * * * *

■ 36. Section 32.4 is revised to read as follows:

§ 32.4 Filing procedure.

All applications under Part 32 must be filed with the Secretary of the Commission in accordance with filing procedures posted on the Commission's Web site at *http://www.ferc.gov.*

PART 33—APPLICATION FOR ACQUISITION, SALE, LEASE, OR OTHER DISPOSITION, MERGER OR CONSOLIDATION OF FACILITIES, OR FOR PURCHASE OR ACQUISITION OF SECURITIES OF A PUBLIC UTILITY

■ 37. The authority citation for part 33 is revised to read as follows:

Authority: 16 U.S.C. 791a–825r, 2601–2645; 31 U.S.C. 9701; 42 U.S.C. 7101–7352.

§ 33.6 [Removed]

■ 38. Section 33.6 is removed.

■ 39. In § 33.8, revise the first sentence to read as follows:

§ 33.8 Number of copies.

The applicant must submit the application or petition to the Secretary of the Commission in accordance with filing procedures posted on the Commission's Web site at *http://www.ferc.gov.** * *

PART 34—APPLICATION FOR AUTHORIZATION OF THE ISSUANCE OF SECURITIES OR THE ASSUMPTION OF LIABILITIES

■ 40. The authority citation for Part 34 continues to read as follows:

Authority: 16 U.S.C. 791a–825r, 2601–2645; 31 U.S.C. 9701; 42 U.S.C. 7101–7352.

§ 34.3 [Amended]

■ 41. In § 34.3, remove paragraph (k).

■ 42. Section 34.7 is revised to read as follows:

§ 34.7 Filing requirements.

Applications must be filed with the Secretary of the Commission in accordance with filing procedures posted on the Commission's Web site at *http://www.ferc.gov.*

§ 34.9 [Removed]

■ 43. Remove § 34.9.

§ 34.10 [Redesignated as § 34.9]

■ 44. Section 34.10 is redesignated as § 34.9.

PART 35—FILING OF RATE SCHEDULES AND TARIFFS

■ 45. The authority citation for Part 35 continues to read as follows:

Authority: 16 U.S.C. 791a–825r, 2601–2645; 31 U.S.C. 9701; 42 U.S.C. 7101–7352.

§ 35.0 [Removed]

■ 46–47. Section 35.0 is removed.

§ 35.33 [Amended]

■ 48. In § 35.33, paragraph (c), the phrase "Commission's Library, Room 95–01" is removed and the phrase "Commission" is added in its place. The phrase *http://www.archives.gov/federal_register/code_of_federal_regulations/ibr_locations.html* is removed and the phrase *http://www.archives.gov/federal-register/cfr/ibr-locations.html* is added in its place.

PART 39—RULES CONCERNING CERTIFICATION OF THE ELECTRIC RELIABILITY ORGANIZATION; AND PROCEDURES FOR THE ESTABLISHMENT, APPROVAL, AND ENFORCEMENT OF ELECTRIC RELIABILITY STANDARDS

■ 49. The authority citation for Part 39 continues to read as follows:

Authority: 16 U.S.C. 824o.

§ 39.7 [Amended]

■ 50. In § 39.7, paragraph (d)(6) is removed and paragraph (d)(7) is redesignated as paragraph (d)(6).

PART 45—APPLICATION FOR AUTHORITY TO HOLD INTERLOCKING POSITIONS

■ 51. The authority citation for Part 45 continues to read as follows:

Authority: 16 U.S.C. 791a–825r, 2601–2645; 31 U.S.C. 9701; 42 U.S.C. 7101–7352; 3 CFR 142.

■ 52. Section 45.7 is revised to read as follows:

§ 45.7 Form of application; filing procedure.

Applications, supplemental applications, statements of supplemental information, notices of change, and reports should be filed with the Secretary of the Commission in accordance with filing procedures posted on the Commission's Web site at *http://www.ferc.gov.* Each filing must be dated, signed by the applicant, and verified under oath in accordance with § 385.2005(b) and (c).

■ 53. In § 45.8, the section heading and introductory text are revised to read as follows:

§ 45.8 Contents of application.

Each application shall state the following:

* * * * *

PART 46—PUBLIC UTILITY FILING REQUIREMENTS AND FILING REQUIREMENTS FOR PERSONS HOLDING INTERLOCKING POSITIONS

■ 54. The authority citation for Part 46 is revised to read as follows:

Authority: 16 U.S.C. 792–828c; 16 U.S.C. 2601–2645; 42 U.S.C. 7101–7352; E.O. 12009, 3 CFR 142.

■ 55. In § 46.3, the second sentence of paragraph (a) is revised to read as follows:

§ 46.3 Purchaser list.

(a) * * * The public utility must submit the list to the Secretary of the Commission in accordance with filing procedures posted on the Commission's Web site at *http://www.ferc.gov* and make the list publicly available through its principal business office.

* * * * *

§ 46.4 [Amended]

■ 56. In § 46.4 introductory text, the phrase "the Office of the Secretary of the Commission a written statement" is removed and the phrase "the Secretary of the Commission a statement" is added in its place.

■ 57. In § 46.6, the section heading is revised and in paragraph (d)(3), the phrase "shall be available to the public during regular business hours through the Commission's Office of Public Information" is removed and the phrase "shall be available to the public through the Commission's eLibrary system on *http://www.ferc.gov*" is added in its place.

The revision reads as follows:

§ 46.6 Contents of the statement and procedures for filing.

* * * * *

PART 152—APPLICATION FOR EXEMPTION FROM THE PROVISIONS OF THE NATURAL GAS ACT PURSUANT TO SECTION 1(C) THEREOF AND ISSUANCE OF BLANKET CERTIFICATES AUTHORIZING CERTAIN SALES FOR RESALE

■ 58. The authority citation for Part 152 continues to read as follows:

Authority: 15 U.S.C. 717–717w, 3301–3432; 42 U.S.C. 7101–7352.

■ 59. Section 152.2 is revised to read as follows:

§ 152.2 Form of application; service.

The application must be filed with the Secretary of the Commission in accordance with filing procedures posted on the Commission's Web site at *http://www.ferc.gov.* A copy of the application shall be served on the State Commission which has jurisdiction over the applicant and upon each wholesale customer of the applicant.

■ 60. In § 152.3, the section heading is revised and in the introductory text, the phrase "shall be accompanied by the fee prescribed in part 381 of this chapter or a petition for waiver pursuant to § 381.106 of this chapter and" is removed.

The revision reads as follows:

§ 152.3 Contents of application.

* * * * *

§ 152.5 [Amended]

■ 61. In § 152.5, the phrase "Federal Power Commission" is removed in each of the two places in which it appears and the phrase "Federal Energy Regulatory Commission" is added in both places.

PART 153—APPLICATIONS FOR AUTHORIZATION TO CONSTRUCT, OPERATE, OR MODIFY FACILITIES USED FOR THE EXPORT OR IMPORT OF NATURAL GAS

■ 62. The authority citation for Part 153 continues to read as follows:

Authority: 15 U.S.C. 717b, 717o; E.O. 10485, 3 CFR, 1949–1953 Comp., p. 970, as amended by E.O. 12038, 3 CFR, 1978 Comp., p. 136, DOE Delegation Order No. 0204–112, 49 FR 6684 (February 22, 1984).

■ 63. In § 153.20, paragraph (a) is revised to read as follows:

§ 153.20 General Rule.

(a) *Filing procedures.* Applications under Subparts B and C must be submitted to the Secretary of the Commission in accordance with filing procedures posted on the Commission's Web site at *http://www.ferc.gov.*

* * * * *

PART 156—APPLICATIONS FOR ORDERS UNDER SECTION 7(a) OF THE NATURAL GAS ACT

■ 64. The authority citation for Part 156 is revised to read as follows:

Authority: 52 Stat. 824, 829, 830; 56 Stat. 83, 84; 15 U.S.C. 717f, 717f(a), 717n, 717o.

■ 65. In § 156.3, the section heading and paragraph (a) are revised, and in paragraph (b) introductory text, the phrase "shall be accompanied by the fee prescribed in part 159 of this subchapter and" is removed.

The revisions read as follows:

§ 156.3 Applications; general requirements.

(a) Applicable rules. The application must be filed with the Secretary of the Commission in accordance with filing procedures posted on the Commission's Web site at *http://www.ferc.gov.* In all other respects applications shall conform to the requirements of §§ 156.1 through 156.5. Amendments to or withdrawals of applications shall be filed in accordance with the

requirements of §§ 385.213 and 385.214 of this chapter.

* * * * *

PART 157—APPLICATIONS FOR CERTIFICATES OF PUBLIC CONVENIENCE AND NECESSITY AND FOR ORDERS PERMITTING AND APPROVING ABANDONMENT UNDER SECTION 7 OF THE NATURAL GAS ACT

■ 66. The authority citation for Part 157 continues to read as follows:

Authority: 15 U.S.C. 717–717w.

§ 157.6 [Amended]

■ 67. In § 157.6, paragraph (a)(5) is removed and paragraph (a)(6) is redesignated as paragraph (a)(5), and in paragraph (b) introductory text, the phrase "shall be accompanied by the fee prescribed in part 381 of this chapter or a petition for waiver pursuant to § 381.106 of this chapter and" is removed.

PART 385—RULES OF PRACTICE AND PROCEDURE

■ 68. The authority citation for Part 385 continues to read as follows:

Authority: 5 U.S.C. 551–557; 15 U.S.C. 717–717z, 3301–3432; 16 U.S.C. 791a–825v, 2601–2645; 28 U.S.C. 2461; 31 U.S.C. 3701, 9701; 42 U.S.C. 7101–7352, 16441, 16451–16463; 49 U.S.C. 60502; 49 App. U.S.C. 1–85 (1988).

§ 385.1901 [Amended]

■ 69. In § 385.1901, in the address given in paragraph (c)(2), the phrase "Suite 8000, 825 North Capitol Street, NE." is removed and the phrase "888 First Street, NE." is added in its place.

■ 70. Section 385.2004 is revised to read as follows:

§ 385.2004 Originals and copies of filings (Rule 2004).

The requirements for making filings under this chapter are posted on the Commission's Web site at *http://www.ferc.gov.* The requirements cover documents and forms submitted on paper, on electronic media, or via the Commission's electronic filing systems.

§ 385.2012 [Amended]

■ 71. In § 385.2012, the phrase "825 North Capitol Street, NE." is removed and the phrase "888 First Street, NE." is added in its place.

PART 388—INFORMATION AND REQUESTS

■ 72. The authority citation for Part 388 continues to read as follows:

Authority: 5 U.S.C. 301–305, 551, 552 (as amended), 553–557; 42 U.S.C. 7101–7352.

■ 73. In § 388.112, paragraph (b) is revised to read as follows:

§ 388.112 Requests for special treatment of documents submitted to the Commission.

* * * * *

(b) Procedures. A person claiming that information warrants special treatment as CEII or privileged must file a statement requesting CEII or privileged treatment for some or all of the information in a document, and the justification for special treatment of the information, in accordance with filing procedures posted on the Commission's Web site at *http://www.ferc.gov.*

* * * * *

[FR Doc. 2010–17561 Filed 7–23–10; 8:45 am]

BILLING CODE 6717–01–P

DEPARTMENT OF TRANSPORTATION

Federal Highway Administration

23 CFR Part 669

[FHWA Docket No. FHWA–2009–0098]

RIN 2125–AF32

Certification of Enforcement of the Heavy Vehicle Use Tax

AGENCY: Federal Highway Administration (FHWA), DOT.

ACTION: Final rule.

SUMMARY: This rule sets forth updated FHWA procedures for enforcement of the State registration of vehicles subject to the Heavy Vehicle Use Tax (HVUT). This rule will bring FHWA's HVUT regulations up-to-date to be consistent with many changes that have impacted the regulation over the last 2 decades.

DATES: *Effective Date:* October 25, 2010.

FOR FURTHER INFORMATION CONTACT: Ralph Erickson, Highway Funding and Motor Fuels Team Leader, Office of Policy, HPPI–10, (202) 366–9235, or Raymond W. Cuprill, Office of the Chief Counsel, (202) 366–0791, Federal Highway Administration, 1200 New Jersey Avenue, SE., Washington, DC 20590. Office hours are from 7:45 a.m. to 4:15 p.m. *e.t.,* Monday through Friday, except Federal holidays.

SUPPLEMENTARY INFORMATION:

Electronic Access and Filing

You may retrieve comments online through the Federal Docket Management System at: *http://www.regulations.gov.* Regulations.gov is available 24 hours each day, 365 days each year. Electronic submission and retrieval help and guidelines are available under the help section of the Web site.

An electronic copy of this document may also be downloaded from the Office of the Federal Register's home page at: *http://www.gpoaccess.gov/fr/index.html* and the Government Printing Office's Web page at: *http://www.gpoaccess.gov.*

Background

In the Surface Transportation Assistance Act of 1982, Congress established the HVUT. The purpose of the tax is to impose a road use charge that has some relation to the costs caused by the vehicle (heavier vehicles cause more road damage than light vehicles, and therefore should pay a higher highway funding contribution). The FHWA Cost Allocation studies [1] demonstrated that damage to the roadway, resulting from a doubling of the weight of a vehicle, caused an exponential increase in the amount of damage to the roadway than would have been caused by a lower weight. To compensate for this additional damage (costs occasioned), Congress established the HVUT as a way to recover from those vehicles the additional costs they impose. The HVUT imposes a tax on vehicles with a gross vehicle weight of 55,000 pounds and over using a sliding scale up to $550 per year payable to the Internal Revenue Service (IRS). When the HVUT has been paid, the vehicle is eligible to be registered by the State. Provisions allow for temporary and partial-year vehicle registrations.

The FHWA's responsibility in the administration of the HVUT is to ensure that the States are obtaining proof-of-payment of the HVUT before registering these vehicles to operate on the roadways. The agency published regulations at 23 CFR Part 669 implementing the requirements of this program as established by Federal law at 23 U.S.C. 141(c). In accordance with this Federal law, a State's annual apportionment of Interstate Maintenance funds under 23 U.S.C. 104(b)(4) may be reduced by up to 25 percent in any fiscal year during which heavy vehicles subject to HVUT may be lawfully registered in the State without having presented proof-of-payment of the tax. Part 669 established a certification program to ascertain State compliance with these requirements,

[1] Final Report on the Federal Highway Cost Allocation Study: Report of the Secretary of Transportation to the United States Congress Pursuant to Section 506, Public Law 95–599, Surface Transportation Assistance Act of 1978: U.S. Department of Transportation, Washington, DC, May 1982 and 1997 Federal Highway Cost Allocation Study: U.S. Department of Transportation, Washington, DC, August 1997. Federal Highway Cost Allocation Study: U.S. Department of Transportation, Washington, DC, August 1997.

procedures for evaluating State compliance, and procedures for any required reduction of funds. This rule modifies existing FHWA procedures for enforcement of the State registration of vehicles subject to the HVUT. The regulation is consistent with several changes in applicable law and technology, and with regulations recently promulgated by the IRS.

History

The HVUT tax was imposed by section 143 of the Surface Transportation Assistance Act of 1982, Public Law 97–424, and is codified as 23 U.S.C. 141, which provides for State certification of enforcement of laws respecting maximum vehicle size and weight. The amendment added a provision to section 141 that provides that a State's annual apportionment of Interstate Maintenance funds may be reduced by up to 25 percent in any fiscal year during which heavy vehicles subject to the HVUT may be lawfully registered in the State without having presented proof-of-payment of the tax.

On July 14, 1986, the FHWA published in the **Federal Register** (51 FR 25363) a final rule implementing the requirements of this statute in 23 CFR Part 669—Enforcement of Heavy Vehicle Use Tax. The notice set forth procedures to be followed by each State for certifying that it is obtaining evidence of proof-of-payment of the Federal heavy vehicle use tax in accordance with 23 U.S.C. 141 for vehicles subject to the use tax imposed by section 4481 of the Internal Revenue Code of 1954, as amended, before such vehicles are lawfully registered in the State. An annual certification of compliance is required. Procedures are specified for reducing a State's apportionment of highway funds in accordance with 23 U.S.C. 141 in the event a State fails to meet the requirements of the regulation.

Over the decades since 1986, the IRS has updated its procedures for implementing the HVUT proof-of-payment. The current regulations, found in 26 CFR 41.6001–2,[2], entitled proof-of-payment for State registration purposes, sets forth circumstances under which a State must require proof-of payment of the tax imposed by 26 U.S.C. 4481(a), and the required manner in which such proof-of-payment is to be received by the State as a condition of issuing a registration for a highway motor vehicle. A State must either comply with the provision of this section, or comply with other, alternative rules regarding the satisfaction of proof-of-payment requirement as may be prescribed by the Internal Revenue Service (IRS) Commissioner in order to avoid a reduction of Federal-aid highway funds apportioned under 23 U.S.C. 23 104(b)(4). This FHWA final rule provides compatibility with the revised IRS rules.

Discussion of Comments

A Notice of Proposed Rulemaking (NPRM) was published in the **Federal Register** on November 30, 2009, at 74 FR 62518. The comment period closed on March 1, 2010. The Docket received comments from five different organizations: (1) The Office of Congressman Don Young, (2) the New York Department of Motor Vehicles, (3) the State of Pennsylvania, (4) the Minnesota Office of the Commissioner of the Department of Public Safety, and (5) the International Registration Plan, jointly representing several unidentified States which concurred with their comments.

General Comments

The first commenting organization, the Office of Congressman Don Young; Alaska, indicated that constituents in Alaska are frustrated by an Alaskan requirement that individuals register their vehicle in person in order to show written documentation of HVUT payment. In Alaska, this evidence of documentation is required to complete Alaska DMV Form 846, the Heavy Vehicle Use Tax Declaration. Other vehicles can be registered online while vehicles subject to HVUT cannot. Alaska urges that changes be made in FHWA regulations to allow individuals to register vehicles subject to HVUT online.

This comment is outside the scope of this rulemaking. FHWA's role in administering the HVUT is to validate that the States are exercising their responsibility to assist in the administration of this tax as mandated by Congress and administered by the IRS. The FHWA does support the development of procedures by which the HVUT tax can be more effectively and efficiently enforced.

Sections 669.1, 669.2, 669.9, and 669.13

Two commenting organizations, the State of Pennsylvania (Pennsylvania) and the International Registration Plan, Inc. (IRP), expressed their support of the proposed changes related to sections 669.1, 669.2, 669.9, and 669.13. Both organizations indicated that these proposed changes provide updated references to other laws, regulations, and related documents.

Section 669.7 Certification Requirement

Two commenting organizations, IRP and Pennsylvania, expressed their support of the proposed changes to section 669.7 as it would provide FHWA with time needed to review certifications and determine if States met their responsibilities. Both commenting organizations stated that the change would not place an undue burden on States. The IRP also offered that this change would help match other certifications currently submitted by States to FHWA.

Section 669.11 Certification Submittal

One commenting organization, the State of New York—Department of Motor Vehicles (New York), indicated that they have no objection to the proposed change in the certification deadline from July 1 to January 1.

Another commenting organization, Minnesota—Department of Public Safety, Office of the Commissioner (Minnesota), requested clarification on how FHWA will phase in the new regulation. Specifically, the commenter indicated that if this final rule is adopted before July 1, 2010, it is unclear how or whether States' eligibility for fiscal year 2011 apportionment would be determined, since they will not be certifying compliance until January 1, 2011 (ostensibly for the period from October 1, 2009, to September 30, 2010). Additionally, if FHWA does not adopt the proposed rules until after October 1, a question would arise as to whether States would have to certify compliance for the 4-month gap created by the change in certification periods (*i.e.,* for the period from June 1 to September 30, 2009).

Since this final rule will become effective after July 1, 2010, States will comply with the existing rule for the certification due on July 1, 2010. This final rule will be applicable starting with the certification due on January 1, 2011, and that first certification would only cover the 4-month period of June 1 through September 30, 2010. The annual certification due on January 1, 2012, would cover a full 12-month period of October 1, 2010 through September 30, 2011. Subsequent annual certifications would likewise cover the 12-month period ending the previous September 30.

[2] 26 CFR part 41 subpart A, entitled *Introduction,* subpart B entitled *Tax on Use of Certain Highway Motor Vehicles,* and Subpart C, entitled *Administrative Provisions of Special Application to Tax on use of Certain Highway Motor Vehicles,* sections 41.0–1, 41.4481—41.4483–7, and 41.600101—41.6156–1.

Section 669.21 Procedure for Evaluating State Compliance

Two commenting organizations, Pennsylvania and IRP, expressed support for the proposal that all agencies responsible for issuing registrations for HVUT class vehicles be required to provide proof-of-payment responsibilities, including any private agencies which some States utilize to perform registration processes. However, three commenting organizations, New York, Minnesota, and IRP, expressed some concerns.

Specifically, the three commenting organizations stated their objection to the proposed change to require, rather than allow, electronic storage of IRS Schedule 1 (Form 2290)—proof-of-payment. One commenting organization stated that additional Federal funding would be needed to implement the use of electronic images for proof-of-payment. This same commenter expressed concern that the proposed rules do not specify how States must certify proof-of-payment when the IRS Schedule 1 (Form 2290) has been filed electronically. The commenter expressed that FHWA should address the issue in its rules and not wait for the IRS to develop its long-promised electronic verification process. The commenter observed that if the electronic verification system (mandated by Congress in 2004) were available, there arguably would be no need for the States to retain receipted Forms 2290 at all.

When proof-of-payment has been filed electronically with the IRS, the vehicle owner must retain a copy of the proof-of-payment for State vehicle registration purposes. Since July of 2009, the IRS has employed an electronic filing and payment process, which returns a receipted proof-of-payment to the taxpayer. This procedure is required for firms owning more than 25 trucks, but optional for smaller trucking operations. In either case, a paper copy of the proof-of-payment is provided to the taxpayer which may be presented at the time of vehicle registration. The State must preserve a copy of this proof-of-payment by paper copy or scanning procedures.

In the future, the State may develop an electronic process for vehicle registration, including registration of vehicles subject to HVUT, and presumably they would be inspecting an electronic proof-of-payment from the IRS. This situation offers a prime example of a case where a State might want to exercise the option to capture the proof-of-payment records in a software application format as authorized in this final rule, and FHWA would be periodically inspecting an electronic file of proof-of-payment images.

The changes to section 669.21 adopted in this final rule do not specify the method by which the State must maintain the proof. The FHWA is not requiring States to utilize a scanning procedure. The FHWA's responsibility is to administer an established procedure to ensure that States check for IRS Schedule 1 (Form 2290) before registering certain vehicles. To do this, FHWA needs the States to retain some record that they have inspected IRS Schedule 1 (Form 2290). In FHWA's view, the current method to ensure that proof-of-payment is valid is insufficient, because it does not include provisions for local or private recordkeeping, and provides for unverifiable options such as making an entry in an automated file or on registration documents retained by the State. To properly administer FHWA's responsibilities, FHWA staff must review either a paper copy or a scanned image of the proof-of-payment. The FHWA staff must be able to view these items to check for signs of fraudulent proof-of-payment such as multiple copies of copies of originals, obviously invalid IRS receipt stamps, Employee Identification Number (EIN) "applied for" when they can be easily obtained from the IRS, and other suspicious markings or missing information.

Three commenting organizations, Minnesota, Pennsylvania, and IRP questioned the factual basis for FHWA's unfunded mandates analysis regarding the document retention requirement of IRS Schedule 1 (Form 2290). One commenting organization, Pennsylvania, also questioned how this action would not have significant economic impact. All commenting organizations expressed these concerns based on a misunderstanding that the proposed rule requires the scanning of IRS Form 2290 into a computerized record. Additionally, a commenter indicated that no timeline for implementation by States is provided in the rule, and that a reasonable timeline should be established to allow for compliance. Since FHWA is not requiring States to utilize a scanning procedure, these concerns are not being addressed in this final rule.

Another commenting organization, Minnesota, also stated that the proposed "one-year" retention schedule of IRS Schedule 1 (Form 2290) is misleading. Under the proposed rule, Minnesota suggested that it would not certify its compliance as to a vehicle registered in October 2010 until January 1, 2012, and it would not receive the certification of apportionment until October 1, 2012. In effect, then, Minnesota would have to retain receipted Forms 2290 for up to 2 years. That is not the case. It appears that the commenter has mistakenly combined the annual certification process and the requirements concerning periodic inspection of records by FHWA, which are two separate processes. It is under the inspection requirements that the State is required to collect and maintain proof-of-payment records for 1 year.

One commenting organization, IRP, expressed concern that evaluation of States' compliance has been inconsistent. The commenter requested that FHWA ensure that evaluations of States are consistent, and all are evaluated on the same standards going forward.

This comment is outside the scope of this rulemaking. However, it should be noted that FHWA has recently provided an extensive on-line course detailing how HVUT reviews should be conducted by FHWA staff in the field offices. This course can be found on our Web site: *http://www.fhwa.dot.gov/policyinformation/hvut/module1/index.htm.*

Section 669.15 Procedure for the Reduction of Funds

Two commenting organizations, Pennsylvania and IRP, stated their support for the proposed revisions to 23 CFR 669.15.

One commenting organization, Minnesota, expressed concern regarding the proposed deletion of certain procedures from section 669.15. Specifically, Minnesota noted three changes of concern: (1) Under the current rule, FHWA must notify a State's governor by certified mail, while the proposed rule is silent as to how and to whom such notice must be given; (2) Under the current rule, States may respond to a proposed determination of nonconformity by submitting evidence either in writing or, at their request, at a conference with FHWA, while in the latter instance, a transcript of the conference must be prepared. The commenter believes that States should continue to have the option of requesting a hearing; (3) Under the current rule, a State may present mitigating evidence to shed light on why a State is unable to comply fully or that it will soon be in full compliance, while the proposed rule limits the evidence that FHWA will consider to "documentation showing why [the State] is in conformity."

The FHWA revised procedures at 23 CFR 669.15, being adopted in today's final rule, parallel other procedures

established by the FHWA and the National Highway Traffic Safety Administration for programs that involve funding sanctions.[3] The adoption of similar procedures makes these programs: (1) Easier to administer, (2) more familiar to the States, and (3) provides States with sufficient notification of a preliminary non-compliance determination, the right to request a review of FHWA's preliminary non-compliance determination, and an opportunity to demonstrate State compliance. Under the new procedures, States do not lose the right to protest or to show compliance. The preliminary notice of nonconformity would be issued with the advance notice of apportionments required under 23 U.S.C. 104(e), together with notice of the funds expected to be withheld from apportionment. A State would have 30 days to submit documentation to FHWA showing why it is in conformity. Any State submission would be reviewed by the FHWA, including the FHWA Administrator. As part of this process, a State would maintain the ability to request an informal conference with the FHWA Administrator, have a transcript of the conference made, or present any mitigating evidence. The FHWA would then issue a final determination to the State and if found in nonconformity, the State would receive notice of the funds being withheld from apportionment as part of the certification of apportionments, which normally occurs on October 1 of each year.

Section 669.17 Compliance Finding

One commenting organization, Minnesota, noted that in the NPRM, FHWA proposed to amend 23 CFR 669.17, the rule pertaining to compliance findings, but no such amendment appeared in the proposed regulatory text. The FHWA proposed removing 23 CFR 669.17 because it referred to the issuance of a compliance finding by the FHWA Administrator and due to the revised procedures this section was no longer necessary. This section is removed by this final rule.

Two commenting organizations, Pennsylvania and IRP, indicated their support of the proposed changes to 23 CFR 669.17, as the changes would bring a more consistent and formalized process to the apportionment and notification of non-compliance.

[3] Drug Offender Driver's License Suspension Program, 23 CFR 192.10; Minimum Drinking Age Program, 23 CFR 1208.6; Zero Tolerance Laws, 23 CFR 1210.10; 0.08 BAC Per Se Laws Program, 23 CFR 1225.12; Open Container Program, 23 CFR 1270.8; Repeat Intoxicated Driver Laws, 23 CFR 1275.8.

Rulemaking Analyses and Notices

Executive Order 12866 (Regulatory Planning and Review) and DOT Regulatory Policies and Procedures

The FHWA has determined that this action would not be a significant regulatory action within the meaning of Executive Order 12866 and would not be significant within the meaning of Department of Transportation regulatory policies and procedures. It is anticipated that the economic impact of this rulemaking would be minimal. The textual corrections, updates to refer to numerical section changes in law, and change in timing of the certification compliance components of this rule create no changes to the economic cost of the regulation. A few commenting organizations apparently believed that the proposed changes require electronic scanning and retention of IRS Form 2290 for 1 year. As addressed above, FHWA is not requiring such a system, so there is no cost associated with developing new procedures, unless a State must implement procedures to maintain proof payment for counties or other registering agencies. Additionally, the change in administrative procedures to remove the FHWA Administrator from the fund reduction action provides governmental efficiency.

These proposed changes would not adversely affect, in a material way, any sector of the economy. In addition, these changes would not interfere with any action taken or planned by another agency and would not materially alter the budgetary impact of any entitlements, grants, user fees, or loan programs. Consequently, a full regulatory evaluation is not required.

Regulatory Flexibility Act

In compliance with the Regulatory Flexibility Act (Pub. L. 96–354, 5 U.S.C. 60l–612) FHWA has evaluated the effects of this proposed action on small entities and has determined that the proposed action would not have a significant economic impact on a substantial number of small entities.

Unfunded Mandates Reform Act of 1995

This rule would not impose unfunded mandates as defined by the Unfunded Mandates Reform Act of 1995 (Pub. L. 104–4, March 22, 1995, 109 Stat. 48). This rule will not result in the expenditure by State, local, and tribal governments, in the aggregate, or by the private sector, of $141.3 million or more in any 1 year (2 U.S.C. 1532). One change in the regulation that impacts cost is the record keeping provision. Since the States and other vehicles registration entities already keep vehicle registration files, no significant additional cost should be incurred by the States. A few commenting organizations mistakenly believed that the proposed changes required electronic scanning and retention of IRS Form 2290 for 1 year. As addressed above, FHWA is not requiring such a system.

Executive Order 13132 (Federalism Assessment)

This action has been analyzed in accordance with the principles and criteria contained in Executive Order 13132, and the FHWA has determined that this action would not have sufficient federalism implications to warrant preparation of a federalism assessment. The FHWA has also determined that this action would not preempt any State law or State regulation or affect the States' ability to discharge traditional State governmental functions.

Executive Order 12372 (Intergovernmental Review)

Catalog of Federal Domestic Assistance Program Number 20.205, Highway Research, Planning, and Construction. The regulations implementing Executive Order 12372 regarding intergovernmental consultation on Federal programs and activities apply to this program.

Paperwork Reduction Act

Under the Paperwork Reduction Act of 1995 (PRA) (44 U.S.C. 3501, *et. seq.*), Federal agencies must obtain approval from the Office of Management and Budget (OMB) for each collection of information they conduct, sponsor, or require through regulations. The FHWA has determined that this rule does contain collection of information requirements for the purposes of the PRA. The FHWA believes that the information collected under this action is contained in the existing information collection under OMB Control Number 2125–0541 granted by OMB on February 1, 2008.

National Environmental Policy Act

The agency has analyzed this action for the purpose of the National Environmental Policy Act of 1969 (42 U.S.C. 4321) and has determined that this action would not have any effect on the quality of the environment.

Regulation Identification Number

A regulation identification number (RIN) is assigned to each regulatory action listed in the Unified Agenda of Federal Regulations. The Regulatory

Information Service Center publishes the Unified Agenda in April and October of each year. The RIN contained in the heading of this document can be used to cross reference this action with the Unified Agenda.

List of Subjects in 23 CFR Part 669

Grants programs-transportation, Highways and roads, Taxes, Motor vehicles.

Issued on: July 14, 2010.

Victor M. Mendez,

Administrator.

■ In consideration of the foregoing, the FHWA amends part 669 of Title 23, Code of Federal Regulations, as follows:

PART 669—ENFORCEMENT OF HEAVY VEHICLE USE TAX

■ 1. The authority citation for part 669 is revised to read as follows:

Authority: 23 U.S.C. 141(c) and 315; 49 CFR 1.48(b).

■ 2. Revise § 669.7 to read as follows:

§ 669.7 Certification requirement.

The Governor of each State, or his or her designee, shall certify to the FHWA before January 1 of each year that it is obtaining proof-of-payment of the heavy vehicle use tax as a condition of registration in accordance with 23 U.S.C. 141(c). The certification shall cover the 12-month period ending September 30, except for the certification due on January 1, 2011, which shall cover the 4-month period from June 1, 2010 to September 30, 2010.

§ 669.9 [Amended]

■ 3. In § 669.9, amend paragraphs (b), and (c) by removing the words "23 U.S.C. 141(d)" and adding in its place the words "23 U.S.C. 141(c)" in each place it appears.

§ 669.11 [Amended]

■ 4. Amend § 669.11 by removing the word "July" and adding in its place the word "January".

■ 5. Revise § 669.13 to read as follows:

§ 669.13 Effect of failure to certify or to adequately obtain proof-of-payment.

If a State fails to certify as required by this regulation or if the Secretary of Transportation determines that a State is not adequately obtaining proof-of-payment of the heavy vehicle use tax as a condition of registration notwithstanding the State's certification, Federal-aid highway funds apportioned to the State under 23 U.S.C. 104(b)(4) for the next fiscal year shall be reduced in an amount up to 25 percent as determined by the Secretary.

■ 6. Revise § 669.15 to read as follows:

§ 669.15 Procedure for the reduction of funds.

(a) Each fiscal year, each State determined to be in nonconformity with the requirements of this part will be advised of the funds expected to be withheld from apportionment in accordance with § 669.13 and 23 U.S.C. 141(c), as part of the advance notice of apportionments required under 23 U.S.C. 104(e), normally not later than 90 days prior to final apportionment.

(b) A State that received a notice in accordance with paragraph (a) of this section may within 30 days of its receipt of the advance notice of apportionments, submit documentation showing why it is in conformity with this Part. Documentation shall be submitted to the Federal Highway Administration, 1200 New Jersey Avenue, SE., Washington, DC 20590.

(c) Each fiscal year, each State determined to be in nonconformity with the requirements of this part and 23 U.S.C. 141(c), based on FHWA's final determination, will receive notice of the funds being withheld from apportionment pursuant to section 669.3 and 23 U.S.C. 141(c), as part of the certification of apportionments required under 23 U.S.C. 104(e), which normally occurs on October 1 of each fiscal year.

■ 7. Amend § 669.19 as follows:

■ a. Amend paragraphs (a) and (b) by removing the words "23 U.S.C. 104(b)(5)" and adding in its place the words "23 U.S.C. 104(b)(4)" in each place it appears; and

■ b. Amend paragraph (c) by removing the word "Secretary's".

■ 8. Revise § 669.21 to read as follows:

§ 669.21 Procedure for evaluating State compliance.

The FHWA shall periodically review the State's procedures for complying with 23 U.S.C. 141(c), including an inspection of supporting documentation and records. In those States where a branch office of the State, a local jurisdiction, or a private entity is providing services to register motor vehicles including vehicles subject to HVUT, the State shall be responsible for ensuring that these entities comply with the requirements of this part concerning the collection and retention of evidence of payment of the HVUT as a condition of registration for vehicles subject to such tax and develop adequate procedures to maintain such compliance. The State or other responsible entity shall retain a copy of the receipted IRS Schedule 1 (Form 2290), or an acceptable substitute prescribed by 26 CFR Part 41 sec. 41.6001–2 for a period of 1 year for purposes of evaluating State compliance with 23 U.S.C. 141(c) by the FHWA. The State may develop a software system to maintain copies or images of this proof-of-payment.

[FR Doc. 2010–18180 Filed 7–23–10; 8:45 am]

BILLING CODE 4910–22–P

ENVIRONMENTAL PROTECTION AGENCY

40 CFR Part 271

[EPA–R01–RCRA–0561; FRL–9179–5]

Rhode Island: Final Authorization of State Hazardous Waste Management Program Revisions

AGENCY: Environmental Protection Agency (EPA).

ACTION: Immediate final rule.

SUMMARY: The State of Rhode Island has applied to EPA for final authorization of certain changes to its hazardous waste program under the Resource Conservation and Recovery Act (RCRA). EPA has determined that these changes satisfy all requirements needed to qualify for final authorization, and is authorizing the State's changes through this immediate final action.

DATES: This final authorization will become effective on September 24, 2010 unless EPA receives adverse written comment by August 25, 2010. If EPA receives such comment, it will publish a timely withdrawal of this immediate final rule in the **Federal Register** and inform the public that this authorization will not take immediate effect.

ADDRESSES: Submit your comments, identified by Docket ID No. EPA–R01–RCRA–0561, by one of the following methods:

- *http://www.regulations.gov:* Follow the on-line instructions for submitting comments.
- *E-mail: biscaia.robin@epa.gov.*
- *Fax:* (617) 918–0642, to the attention of Robin Biscaia.
- *Mail:* Robin Biscaia, RCRA Waste Management Section, Office of Site Remediation and Restoration (OSRR 07–01), EPA New England—Region 1, 5 Post Office Square, Suite 100, Boston, MA 02109–3912.
- *Hand Delivery or Courier:* Deliver your comments to Robin Biscaia, RCRA Waste Management Section, Office of Site Remediation and Restoration (OSRR 07–01), EPA New England—Region 1, 5 Post Office Square, 7th floor, Boston, MA 02109–3912. Such deliveries are only accepted during the Office's normal hours of operation, and

special arrangements should be made for deliveries of boxed information.

Instructions: Identify your comments as relating to Docket ID No. EPA–R01–RCRA–0561. EPA's policy is that all comments received will be included in the public docket without change and may be made available online at *http://www.regulations.gov,* including any personal information provided, unless the comment includes information claimed to be Confidential Business Information (CBI) or claimed to be other information whose disclosure is restricted by statute. Do not submit information that you consider to be CBI or otherwise protected through *www.regulations.gov* or e-mail. The *http://www.regulations.gov* Web site is an "anonymous access" system, which means EPA will not know your identity or contact information unless you provide it in the body of your comment. If you send an e-mail comment directly to EPA without going through *www.regulations.gov,* your e-mail address will be automatically captured and included as part of the comment that is placed in the public docket and made available on the Internet. If you submit an electronic comment, EPA recommends that you include your name and other contact information in the body of your comment and with any disk or CD–ROM you submit. If EPA cannot read your comment due to technical difficulties and cannot contact you for clarification, EPA may not be able to consider your comment. Electronic files should avoid the use of special characters, any form of encryption, and be free of any defects or viruses. For additional information about EPA's public docket visit the EPA Docket Center homepage at *http://www.epa.gov/epahome/dockets.htm.*

Docket: EPA has established a docket for this action under Docket ID No. EPA–R01–RCRA–0561. All documents in the docket are listed on the *http://www.regulations.gov* Web site. Although it may be listed in the index, some information might not be publicly available, *e.g.,* CBI or other information whose disclosure is restricted by statute. Certain other material, such as copyrighted material, is not placed on the Internet and will be publicly available only in hard copy form. Publicly available docket materials are available either electronically through *http://www.regulations.gov* or in hard copy at the following two locations: (i) EPA Region 1 Library, 5 Post Office Square, 1st floor, Boston, MA 02109–3912; by appointment only; tel: (617) 918–1990; and (ii) Rhode Island Department of Environmental Management, 235 Promenade St., Providence, RI 02908–5767, by appointment only through the Office of Technical and Customer Assistance, tel: (401) 222–6822.

FOR FURTHER INFORMATION CONTACT: Robin Biscaia, RCRA Waste Management Section, Office of Site Remediation and Restoration (OSRR 07–01), EPA New England—Region 1, 5 Post Office Square, Suite 100, mail code OSRR 07–1, Boston, MA 02109–3912; telephone number: (617) 918–1642; fax number: (617) 918–0642, e-mail address: *biscaia.robin@epa.gov.*

SUPPLEMENTARY INFORMATION:

A. Why are revisions to State programs necessary?

States which have received final authorization from EPA under RCRA section 3006(b), 42 U.S.C. 6926(b), must maintain a hazardous waste program that is equivalent to, consistent with, and no less stringent than the Federal program. As the Federal program changes, States must change their programs and ask EPA to authorize the changes. Changes to State programs may be necessary when Federal or State statutory or regulatory authority is modified or when certain other changes occur. Most commonly, States must change their programs because of changes to EPA's regulations in 40 Code of Federal Regulations (CFR) parts 124, 260 through 266, 268, 270, 273 and 279.

B. What decisions have we made in this rule?

We have concluded that Rhode Island's application to revise its authorized program meets all of the statutory and regulatory requirements established by RCRA. Therefore, we grant Rhode Island final authorization to operate its hazardous waste program with the changes described in the authorization application. Rhode Island's Department of Environmental Management (RIDEM) has responsibility for permitting Treatment, Storage, and Disposal Facilities (TSDFs) within its borders and for carrying out the aspects of the RCRA program covered by its revised program application, subject to the limitations of the Hazardous and Solid Waste Amendments of 1984 (HSWA). New Federal requirements and prohibitions imposed by Federal regulations that EPA promulgates under the authority of HSWA take effect in authorized States before they are authorized for the requirements. Thus, EPA will implement any such requirements and prohibitions in Rhode Island, including issuing permits, until the State is granted authorization to do so. In particular, the EPA will continue to implement the Land Disposal Restrictions (LDR) requirements in 40 CFR part 268, the RCRA air emission control requirements in 40 CFR part 264, subparts AA, BB and CC, and 40 CFR part 265, subparts AA, BB and CC, and the Boilers and Industrial Furnaces (BIF) requirements in 40 CFR part 266, subpart H, because Rhode Island has not yet sought and obtained authorization for those requirements. Regulated entities in Rhode Island must comply with these directly administered EPA requirements, in addition to the State hazardous waste requirements. While there currently are no facilities in Rhode Island subject to the BIF requirements, there are many facilities in Rhode Island (including some generators as well as treatment, storage and disposal facilities) subject to the LDR and AA, BB and CC requirements.

C. What is the effect of today's authorization decision?

The effect of this decision is that a facility in Rhode Island subject to RCRA will now have to comply with the authorized State requirements instead of the equivalent Federal requirements in order to comply with RCRA. Rhode Island has enforcement responsibilities under its State hazardous waste program for violations of such program, but EPA also retains its full authority under RCRA sections 3007, 3008, 3013, and 7003, which includes, among others, authority to:

- Perform inspections, and require monitoring, tests, analyses or reports
- Enforce RCRA requirements and suspend or revoke permits
- Take enforcement actions

This action does not impose additional requirements on the regulated community because the regulations for which Rhode Island is being authorized by today's action are already effective under State law, and are not changed by today's action.

D. Why wasn't there a proposed rule before today's rule?

EPA did not publish a proposal before today's Immediate Final rule because we view this as a routine program change and do not expect adverse comments that oppose this approval. We are providing an opportunity for public comment now. In addition to this rule, in the proposed rules section of today's **Federal Register** we are publishing a separate document that proposes to authorize the State program changes. That proposed rule will serve as the basis for later issuing a final rule, in the event that there is an objection to this Immediate Final Rule, and we

therefore need to withdraw this Immediate Final Rule and respond to the objection before issuing a new final rule.

In addition to the matters covered by this Immediate Final rule, the State is seeking authorization for the zinc fertilizer rule (checklist 200). Because we think that there may be adverse comments that oppose the Federal authorization of the State for this rule, we are not including the authorization of the zinc fertilizer rule within this Immediate Final rule. Rather, we are proposing to authorize Rhode Island for the zinc fertilizer rule in today's proposed rule. Any approval of Rhode Island to implement the zinc fertilizer rule will occur only through a later separate final rule, which will be issued only after considering any public comments.

E. What happens if EPA receives comments that oppose this action?

If EPA receives comments that oppose this authorization (other than relating to the zinc fertilizer rule), we will withdraw this rule by publishing a document in the **Federal Register** before the rule becomes effective. EPA will base any further decision on the authorization of the State program changes on the proposal mentioned in the previous paragraph. We will then address all public comments in a later final rule based upon this proposed rule that also appears in today's **Federal Register**. You may not have another opportunity to comment. If you want to comment on this authorization, you should do so at this time.

If we receive adverse comments that oppose only the authorization of a particular change to the State hazardous waste program, we will withdraw that part of this rule but the authorization of the program changes that the comments do not oppose will become effective on the date specified above. The **Federal Register** withdrawal document will specify which part of the authorization will become effective, and which part is being withdrawn.

F. What has Rhode Island previously been authorized for?

Rhode Island initially received final Authorization on January 30, 1986, effective January 31, 1986 (51 FR 3780) to implement its base hazardous waste management program. We granted authorization for changes to their program on March 12, 1990, effective March 26, 1990 (55 FR 9128), March 6, 1992, effective May 5, 1992 (57 FR 8089), October 2, 1992, effective December 1, 1992 (57 FR 45574), August 9, 2002, effective October 8, 2002 (67 FR 51765), and December 11, 2007, effective February 11, 2008 (72 FR 70229).

G. What changes are we authorizing with today's action?

On June 17, 2010, EPA received Rhode Island's complete program revision application dated June 15, 2010 seeking authorization for their changes in accordance with 40 CFR 271.21. The RCRA program revisions for which Rhode Island is seeking authorization include updates to its regulations governing Treatment, Storage and Disposal Facilities (TSDFs). The State has incorporated by reference the Federal requirements relating to TSDFs in 40 CFR parts 264, 270 and 124, through July 1, 2008, while making various more stringent changes as specified in Rules 8.0 and 7.0, respectively. Although there currently are no interim status TSDFs in Rhode Island, the State similarly has updated its incorporation by reference of the Federal interim status facility regulations in 40 CFR part 265. Also, the State has updated its incorporation by reference of other Federal requirements through July 1, 2008, as well as making other changes to its base program, and thus also is seeking authorization for various other State regulations which address other Federal requirements through July 1, 2008. These other changes include adopting the updated Uniform Hazardous Waste Manifest Rule (checklist 207), adopting Federal waste listings through the Dyes and Pigments Rule (checklist 206), and adding Mercury Containing Equipment (checklist 209), Used Electronics and Silver Containing Photo-Fixing Solution to the State's Universal Waste Rule.

The State's authorization application consists of a cover letter requesting authorization, a copy of RIDEM's Rules and Regulations for Hazardous Waste Management dated June 2010, regulatory checklists comparing the State and Federal requirements, justification statements regarding why Rhode Island has added used electronics and silver-containing photo fixing solutions to its Universal Waste Rule, and a Supplement to the Attorney General's Statement.

We are now making an immediate final decision, subject to reconsideration only if we receive written comments that oppose this action, that Rhode Island's hazardous waste program revisions satisfy all of the requirements necessary to qualify for final authorization. Therefore, we grant Rhode Island final authorization for the program changes identified below. Note, the Federal requirements are identified by their checklist (CL) number and/or rule descriptions followed by the corresponding state regulatory analog ("Rule") from Rhode Island's Rules and Regulations for Hazardous Waste Management as in effect on June 7, 2010.

First, we are authorizing State regulations which are analogous to the Federal regulations governing Treatment, Storage and Disposal Facilities (TSDFs) in 40 CFR parts 264, 270 and 124 (July 1, 2008). As analogs to 40 CFR part 264 (July 1, 2008), we are authorizing Rule 2.2 B., Rule 2.2 F, and Rule 8.0—including all of Rule 8.1, except for the following provision which has been determined to be broader in scope: Rule 8.1 A.4. As analogs to 40 CFR part 270 (July 1, 2008), we are authorizing Rule 2.2 B., Rule 2.2 I., Rule 7.0 A., and all of Rule 7.0 B. except for the following provisions which have been determined to be broader in scope: Rule 7.0 B.7. insofar as it regulates circuit boards subject to the Federal scrap metal exemption; and Rule 7.0 B.19. As analogs to 40 CFR part 124 (July 1, 2008), we are authorizing Rule 2.2 B., Rule 2.2 K., and Rule 7.0 C.

Second, we are authorizing State regulations which are analogous to the Federal regulations governing interim status TSDFs in 40 CFR part 265 (July 1, 2008). As analogs to 40 CFR part 265 (July 1, 2008), we are authorizing Rule 2.2 B. and 2.2 G.

By authorizing the State regulations listed in the two paragraphs immediately above, we also are determining that the State meets the TSDF requirements (including permitted facility requirements and interim status facility requirements) listed in the following Checklists: CL 16—Paint Filter Test, 50 FR 18370–18375, April 30, 1985; CL 17E—Location Standards for Salt Domes, Salt Beds, and Underground Mines and Caves, 50 FR 28702–28755, July 15, 1985; CL 17F—Liquids in Landfills, 50 FR 28702–28755, July 15, 1985; CL 17H—Double Liners, 50 FR 28702–28755, July 15, 1985; CL 17I—Ground-Water Monitoring, 50 FR 28702–28755, July 15, 1985; CL 17M—Pre-construction Ban, 50 FR 28702–28755, July 15, 1985; CL 17N—Permit Life, 50 FR 28702–28755, July 15, 1985; CL 17P—Interim Status, 50 FR 28702–28755, July 15, 1985; CL 17Q—Research and Development Permits, 50 FR 28702–28755, July 15, 1985; CL 17S—Exposure Information, 50 FR 28702–28755, July 15, 1985; CL 25—Codification Rule, Technical Correction regarding subpart N—Landfills, 51 FR 19176–19177, May 28, 1986; CL 28—

Standards for Hazardous Waste Storage and Treatment Tank Systems, 51 FR 25422–25486, July 14, 1986 and 51 FR 29430–29431, August 15, 1986 [**Note:** To cover the related changes to definitions and generator requirements made by this Federal checklist/rulemaking, we also are authorizing Rules 2.2C, 2.2D and 3.0—introductory note regarding effective dates of tank regulations]; CL 30—Biennial Report Correction (regarding TSDFs), 51 FR 28556, August 8, 1986; CL 44D—Permit Modification, 52 FR 45788, Dec. 1, 1987; CL 44E—Permit as a Shield Provision, 52 FR 45788, Dec. 1, 1987; CL 44F—Permit Conditions to Protect Human Health and the Environment, 52 FR 45788, Dec. 1, 1987; CL 44G—Post-Closure Permits, 52 FR 45788, Dec. 1, 1987; CL 52—Standards for Hazardous Waste Storage and Treatment Tank Systems, 53 FR 34079, Sept. 2, 1988 [**Note:** To cover the related changes to definitions made by this Federal checklist/rulemaking, we also are authorizing Rule 2.2C]; CL 54—Permit Modification for Hazardous Waste Management Facilities, 53 FR 37912, Sept. 28, 1988 and 53 FR 41649, Oct. 24, 1988; CL 55—Statistical Methods for Evaluating Ground-Water Monitoring Data from Hazardous Waste Facilities, 53 FR 39720, Oct. 11, 1988; CL 60—Amendment to Requirements for Hazardous Waste Incinerator Permits, 54 FR 4286, Jan. 30, 1989; CL 61—Changes to Interim Status Facilities for Hazardous Waste Management etc., 54 FR 9596, March 7, 1989; CL 64—Delay of Closure Period for Hazardous Waste Management Facilities, 54 FR 33376, Aug. 14, 1989; CL 70—Changes to Part 124, 48 FR 14146, Apr. 1, 1983 and 48 FR 30113, June 30, 1983 and 53 FR 28118, July 26, 1988 and 53 FR 37396, Sept. 26, 1988 and 54 FR 246, Jan. 4, 1989; CL 77—HSWA Codification Rule, Double Liners, Correction, 55 FR 19262, May 9, 1990; CL 99—Amendments to Interim Status Standards for Downgradient Ground-Water Monitoring Well Locations, 56 FR 66356, Dec. 23, 1991; CL 100—Liners and Leak Detection Systems for Hazardous Waste Land Disposal Units, 57 FR 3462, Jan. 29, 1992; CL 113—Consolidated Liability Requirements, 53 FR 33938, Sept. 1, 1988, 56 FR 30200, July 1, 1991 and 57 FR 42832, Sept. 16, 1992; CL 118—Liquids in Landfills II, 57 FR 54452, Nov. 18, 1992 [**Note:** To cover a related change to a definition made by this Federal checklist/rulemaking, we also are authorizing Rule 2.2C]; CL 131—Recordkeeping Instructions, 59 FR 13891, March 24, 1994; CL 133—Letter of Credit Revision, 59 FR 29958, June 10, 1994; CL 145—Liquids in Landfills III, 60 FR 35703, July 11, 1995; CL 148—RCRA Expanded Public Participation Rule, 60 FR 63417, Dec. 11, 1995; and CL 174—Post-Closure Permit Requirements and Closure Process, 63 FR 56710, Oct. 22, 1998.

Third, we are authorizing State regulations that are analogous to the Uniform Hazardous Waste Manifest Rule, CL 207, 70 FR 10776, March 24, 2005 and 70 FR 35034, June 16, 2005: Rules 2.2 C, including 2.2 C.7, 2.2 D, including 2.2 D.3, 2.2 E, 2.2 F, 2.2 G, 3.0 including definitions of "Administrator—Regional Administrator," "EPA," "Hazardous Waste" and "Manifest," 5.2 A, 5.3, 5.4 B, 5.6, 5.9, 6.3 K, 6.4, 6.5, 8.1, including 8.1 A.23 and 8.1 A.24, 8.1 A.25, and 8.1 A.26.

Fourth, we are authorizing the State regulations that cover additional hazardous wastes that have been listed by the EPA since the time of Rhode Island's base program approval: CL 14—Dioxin Waste Listing and Management Standards, 50 FR 1978, Jan. 14, 1985: Rules 2.2 C, 3.0—definitions of "hazardous waste" and "acutely hazardous waste," 2.2 C.14, 5.0, 5.2 A, 2.2 F, 2.2 G, 2.2 I, and 7.0 B.33; CL 18—Listing of TDI, DNT and TDA Wastes, 50 FR 42936, Oct. 23, 1985: Rules 2.2 C and 3.0—definition of "hazardous waste"; CL 20—Listing of Spent Solvents, 50 FR 53315, Dec. 31, 1985: Rule 2.2 C; CL 21—Listing of EDB Wastes, 51 FR 5327, Feb. 13, 1986: Rule 2.2 C; CL 22—Listing of Four Spent Solvents, 51 FR 6537, Feb. 25, 1986: Rules 2.2 C and 3.0—definition of "hazardous waste"; CL 33—Listing of EBDC, 51 FR 37725, Oct. 24, 1986: Rule 2.2 C; CL 56—Removal of Iron Dextran from the List of Hazardous Wastes, 53 FR 43878, Oct. 31, 1988: Rules 2.2 C and 3.0—definition of "hazardous waste"; CL 57—Removal of Strontium Sulfide from the List of Hazardous Wastes, 53 FR 43881, Oct. 31, 1988: Rules 2.2 C and 3.0—definition of "hazardous waste"; CL 68—Reportable Quantity Adjustment Methyl Bromide Production Wastes, 54 FR 41402, Oct. 6, 1989: Rule 2.2 C; CL 69—Reportable Quantity Adjustment, 54 FR 50968, Dec. 11, 1989: Rule 2.2 C; CL 72—Modification of F019 Listing, 55 FR 5340, Feb. 14, 1990: Rule 2.2 C; CL 75—Listing of 1,1-Dimethylhydrazine Production Wastes, 55 FR 18496, May 2, 1990: Rule 2.2 C; CL 81—Petroleum Refinery Primary and Secondary Oil/Water/Solids Separation Sludge Listings, 55 FR 46354, Nov. 2, 1990 and 55 FR 51707, Dec. 17, 1990: Rule 2.2 C; CL 86—Removal of Strontium Sulfide from the List of Hazardous Wastes—Technical Amendment, 56 FR 7567, Feb. 25, 1991: Rules 2.2 C and 3.0—definitions of "hazardous waste" and "acutely hazardous waste."; CL 88—Administrative Stay for K069 Listing, 56 FR 19951, May 1, 1991: Rule 2.2 C; CL 89—Revision to the Petroleum Refining Primary and Secondary Oil/Water/Solids Separation Sludge Listings, 56 FR 21955, May 13, 1991: Rule 2.2 C; CL 110—Coke By-Products Listings, 57 FR 37284, Aug. 18, 1992: Rule 2.2 C; CL 115—Chlorinated Toluenes Production Waste Listing, 57 FR 47376, Oct. 15, 1992: Rule 2.2 C; CL 134—Correction of Beryllium Powder (P015) Listing, 59 FR 31551, June 20, 1994: Rules 2.2 C and 3.0—definition of "hazardous waste"; CL 140—Carbamate Production Identification and Listing of Hazardous Waste, 60 FR 7824, Feb. 9, 1995, 60 FR 19165, April 17, 1995 and 60 FR 25619, May 12, 1995: Rules 2.2 C and 3.0—definition of "hazardous waste"; CL 159—Conformance with the Carbamate Vacatur, 62 FR 32974, June 17, 1997: Rules 2.2 C and 3.0—definition of "hazardous waste"; CL 185—Organobromine Production Wastes Vacatur, 65 FR 14472, March 17, 2000: Rules 2.2 C and 3.0—definition of "hazardous waste"; CL 187—Petroleum Refining Process Wastes—Clarification, 64 FR 36365, June 8, 2000: Rule 2.2 C; CL 195—Inorganic Chemical Manufacturing Wastes Identification and Listing, 66 FR 58258, Nov. 20, 2001 and 67 FR 17119, April 9, 2002: Rule 2.2 C; CL 206—Non-wastewaters from Dyes and Pigments, 70 FR 9138, Feb. 24, 2005 and 70 FR 35032, June 16, 2005: Rule 2.2 C; and Special Consolidated Checklist for Wood Preserving Listings, covering CL 82, 55 FR 50450, Dec. 6, 1990, CL 92, 56 FR 30192, July 1, 1991, CL 120, 57 FR 61492, Dec. 24, 1992, and CL 167 F, 63 FR 28556, May 26, 1998: Rules 2.2 C, 2.2 D, 5.2 A, 2.2 F, 2.2 G, and 2.2 I.

Fifth, we are authorizing the State regulations that add Mercury Containing Equipment, Used Electronics and Silver Containing Photo-Fixing Solution to the State's Universal Waste Rule, and that otherwise update the State Universal Waste Rule regulations: CL 209—Mercury Containing Equipment, 70 FR 45508 (Aug. 5, 2005): Rules 2.2 C, 2.2 F, 2.2 G, 2.2 I, 2.2 J, 3.0—definitions of "universal waste," "large quantity handler of universal waste," "small quantity handler of universal waste," 8.1 A.8–10, 13.1 C., 13.4, 13.5 intro., 13.5 C, and 13.5 F–R; 40 CFR part 273, subpart G—Petitions to Include Other Wastes Under 40 CFR part 273: State regulations including Used Electronics in universal waste rule: Rules 2.2 J, 13.1 E, 13.2, 13.4, 13.5 intro., 13.5 A, and 13.

5 F.—S, and State regulations including Silver-Containing Photo-Fixing Solutions in universal waste rule: Rules 2.2 J, 13.1 F, 13.3, 13.4, 13.5 intro., 13.5 A, and 13.5 F.—S; CL 176—Technical Amendments to Universal Waste Rule, 63 FR 71225 (Dec. 24, 1998): Rules 2.2 H and 3.0—definition of "small quantity handler of universal waste."; 40 CFR part 273: current State universal waste regulations with miscellaneous updates: Rule 13.0—all. Note: These universal waste rule regulations are being authorized except to the extent that they cover materials that are not Federal hazardous wastes. The broader in scope wastes are only materials which pass the TCLP test (*e.g.,* fluorescent bulbs with very low levels of mercury), materials that for other reasons are not classified as Federal solid and hazardous wastes (*e.g.,* CRTs that have met the Federal conditions for being excluded from the definition of solid waste), and materials that are excluded from all Federal hazardous waste regulation as household hazardous wastes.

Sixth, we are authorizing State regulations that are analogous to the Federal regulations covered by the following additional Checklists: CL 9—Household Waste, 49 FR 44978, Nov. 13, 1984: Rules 2.2 C11, 3.0—definition of "household hazardous waste," and 5.0 intro., except for provisions in 5.0 intro. which regulate facilities that accept household hazardous waste which are broader in scope, and not including Rule 13.5 provisions which regulate certain household hazardous wastes as universal wastes which are broader in scope; CL 17C—Household Waste, 50 FR 28702–28755, July 15, 1985: Rules 2.2 C11, 3.0—definition of "household hazardous waste," and 5.0 intro., except for provisions in 5.0 intro. which regulate facilities that accept household hazardous waste which are broader in scope, and not including Rule 13.5 provisions which regulate certain household hazardous wastes as universal wastes which are broader in scope; CL 17D—Waste Minimization, 50 FR 28702–28755, July 15, 1985: Rules 2.2 D, 2.2 F, 2.2 I, 5.5, 7.0 C4(c), and 8.1 A.23; CL 17G—Dust Suppression, 50 FR 28702–28755, July 15, 1985: Rule 2.2 H; CL 17J—Cement Kilns, 50 FR 28702–28755, July 15, 1985: Rules 2.2 C and 3.0—definition of "hazardous waste"; CL 17R—Hazardous Waste Exports, 50 FR 28702–28755, July 15, 1985: see CL 31; CL 31—Exports of Hazardous Waste, 51 FR 28664, Aug. 8, 1986: Rules 2.2 C, 2.2 C.14, 2.2 D, 2.2 E, 3.0—definitions of "hazardous waste" and "manifest", 5.0 intro., 5.5, 6.3 L, 6.3 K, 6.3 M and 6.4, but not including Rule 5.3 F since the EPA directly administers and enforces the export and import requirements of 40 CFR part 262, subparts E and F as incorporated by reference by R.I. Rule 5.3 F; CL 48—Farmer Exemptions—Technical Corrections, 53 FR 27164, July 19, 1988: more stringent State provisions in Rules 2.2 D, 2.2 D.5, 2.2 G1, 5.0—intro., 7.0 B.4, 8.1 A.1 and Rule 13.0 provisions re: universal waste pesticides; CL 58—Standards for Generators or Hazardous Waste, 53 FR 45089, Nov. 8, 1988: Rules 2.2 D and 5.3 B; CL 67—Testing and Monitoring Activities, 54 FR 40260, Sept. 29, 1989: Rule 2.2 C; CL 73—Testing and Monitoring Activities—Technical Corrections, 55 FR 8948, Mar. 9, 1990: Rule 2.2 C; CL 76—Criteria for Listing Toxic Wastes—Technical Amendment, 55 FR 18726, May 4, 1990: Rule 2.2 C; CL 97—Exports of Hazardous Wastes—Technical Corrections, 56 FR 43704, Sept. 4, 1991: Rule 2.2 D but not Rule 5.3 F—see note after checklist 31; CL 117A—Reissuance of the Mixture and Derived From Rule, 57 FR 7628, March 3, 1992, 57 FR 23062, June 1, 1992, 57 FR 49278, Oct. 30, 1992: Rules 2.2 C and 3.0—definition of "hazardous waste"; CL 126—Testing and Monitoring Activities, 58 FR 46040, Aug. 31, 1993 and 59 FR 47980, Sept. 19, 1994: Rules 2.2 C, 2.2 F, and 2.2 G; CL 128—Wastes from the Use of Chlorophenolic Formulations in Wood Surface Protection, 59 FR 458, Jan. 4, 1994: Rule 2.2 C; CL 132—Wood Surface Protection—Correction, 59 FR 28484, June 2, 1994: Rule 2.2 C; CL 135—Recovered Oil Exclusion, 59 FR 38536, July 28, 1994: Rules 2.2 C and 3.0—definition of "hazardous waste"; CL 136—Removal of the Conditional Exemption for Certain Slag Residues, 59 FR 43496, Aug. 24, 1994: Rule 2.2 H; CL 139—Testing and Monitoring Activities—Amendment I, 60 FR 3089, Jan. 13, 1995: Rule 2.2 C; CL 141—Testing and Monitoring Activities—Amendment II, 60 FR 17001, April 4, 1995: Rule 2.2 C; CL 144—Removal of Legally Obsolete Rules, 60 FR 33912, June 29, 1995: Rules 2.2 C, 2.2 I and 7.0 B.21; CL 150—Amendments to the Definition of Solid Waste—Amendment II, 61 FR 13103, March 26, 1996: Rule 2.2 C; CL 152—Imports and Exports of Hazardous Waste—Implementation of OECD Council Decision, 61 FR 16290, April 12, 1996: Rules 2.2 C, 2.2 E, 2.2 F, 2.2 G, 2.2 H. 2.2 J, 3.0—definition of "hazardous waste", 5.0—intro., 7.0 B.5, 8.1 A.14, and 2.2 D—except not including the incorporation by reference of 40 CFR part 262, subpart H by Rule 2.2 D since the EPA directly administers and enforces the export and import requirements of that subpart; CL 156—Military Munitions Rule, 62 FR 6622, Feb. 12, 1997: Rules 2.2 C, 2.2 D, 2.2 E, 2.2 F, 2.2 G, 2.2 H, 2.2 I, 5.0, 5.3, 6.0 B, and 6.1 A.8; CL 158—Testing and Monitoring Activities Amendment III, 62 FR 32452, June 13, 1997: Rules 2.2 C, 2.2 G, and 3.0—definition of "hazardous waste"; CL 164—Kraft Mill Steam Stripper Condensate Exclusion, 63 FR 18504, April 15, 1998: Rule 2.2 C; CL 167D—Mineral Processing Secondary Materials Exclusion, 63 FR 28556, May 26, 1998: Rules 2.2 C and 3.0—definition of "hazardous waste", but see CL 199 since State's mineral processing secondary materials exclusion has been revised in accordance with the revisions covered by that Checklist; CL 178—Petroleum Refining Process Wastes—Leachate Exemption, 64 FR 6806, Feb. 11, 1999: Rule 2.2 C; CL 180—Test Procedures for the Analysis of Oil and Grease and Non-Polar Material, 64 FR 26315, May 14, 1999: Rule 2.2 C; CL 192A—Mixture and Derived-From Rules Revisions, 66 FR 27266, May 16, 2001: Rules 2.2 C and 3.0—definition of "hazardous waste"; CL 193—Change of Official EPA Mailing Address, 66 FR 34374, June 28, 2001: Rule 2.2 C; CL 194—Mixture and Derived-From Rules Revision II, 66 FR 50332, Oct. 3, 2001: Rules 2.2 C and 3.0—definition of "hazardous waste"; CL 199—Vacatur of Mineral Processing Spent Materials Being Reclaimed as Solid Wastes and TCLP Use with MGP Waste, 67 FR 11251, March 13, 2002: Rules 2.2 C and 3.0—definition of "hazardous waste," except not including Rule 2.2 C.18 regarding State's regulation of MGP waste in some circumstances, which is broader in scope; CL 208—Methods Innovation Rule and SW–846 Final Update IIIB, 70 FR 34538, June 14, 2005 and 70 FR 44150, August 1, 2005: Rules 2.2 C, 2.2 F, 2.2 G, 2.2 I, 3.0—definition of "hazardous waste", 7.0 B.47, 7.0 B.79, 8.1 A.60 and 15 including 15.1 B.1; CL 211—Revision of Wastewater Treatment Exemptions for Hazardous Waste Mixtures—Headworks Exemptions, 70 FR 57769, Oct. 4, 2005: Rules 2.2 C and 3.0—definition of "hazardous waste"; CL 213—Burden Reduction Initiative, 71 FR 16862, April 4, 2006: Rules 2.2 C, 2.2 C.4, 2.2 F, 2.2 G, 2.2 I, 2.2 J, 7.0 B.82, 8.1 A.17, 8.1 A.41, 8.1 A.45 and 8.1 A.64; CL 214—Errors in the Code of Federal Regulations, 71 FR 40254, July 14, 2006: Rules 2.2 C, 2.2 D, 2.2 F, 2.2 G, 2.2 H, 2.2 I, 3.0—definitions of "universal waste," "used oil", "hazardous waste", and "acutely hazardous waste", 5.0, 5.2 A, 7.0 B.4, 8.1 A.4, 8.1 A.20, 8.1 A.36, 13.5 F, 13.5 H,

13.5 I, 13.5 N, 15.1 B, 15.1 C, 15.2 A, 15.3, 15.3 F(3), 15.3 Table 1, 15.7, 15.7 G(2)(b), 15.7 G(2)(d), 15.7 H(1), 15.8 L, 15.8 Q, 15.8 Q(1), 15.7 Q6(c), 15.8 Q6(d), 15.8 S, 15.8 S(5), 15.8 W(1)(b), 15.8X(1)(b), 15.8 Z and 15.9 B(1); CL 216—Exclusion of Oil-Bearing Secondary Materials Processed in a Gassification System to Produce Synthesis Gas, 73 FR 57, Jan. 2, 2008: Rule 2.2 C; CL 218—F019 Exemption for Wastewater Treatment Sludges from Auto Manufacturing Zinc Phosphating Processes, 73 FR 31756, June 4, 2008: Rule 2.2 C; Consolidated Checklist for the Treatability Studies Exemption, covering CL 49, 53 FR 27290, July 19, 1988 and CL 129, 59 FR 8362, Feb. 18, 1994: Rules 2.2 C and 2.2 C.13; Consolidated Checklist for Bevill Exclusion for Mining Wastes, covering CL 53, 53 FR 35412, Sept. 13, 1988, CL 65, 54 FR 36592, Sept. 1, 1989, CL 71, 55 FR 2322, Jan. 23, 1990, CL 90, 56 FR 27300, June 13, 1991 and CL 167E, 63 FR 28556, May 26, 1998: Rules 2.2 C, 2.2 D, and 3.0—definition of "hazardous waste", except for 2.2 C.12 regarding the State's regulation of coal ash, which is broader in scope.

Seventh, we are authorizing the State for miscellaneous changes it has made to its previously authorized program rules as follows (note, the analogous state provisions follow the general areas of 40 CFR to which the changes relate): 40 CFR 262.34(d) and 261.5—conditional exemptions for small quantity generators and conditionally exempt small quantity generators: additional State Rules providing that Rhode Island is more stringent: 2.2 C.14, 2.2 D.2, 7.0 B.4, 7.0 B.20, 8.1 A.1, 2.2 C.7, 2.2.D.3, and additional/changed citations in Rule 3.0—hazardous waste definition and Rule 5.0—introduction; 40 CFR 262.10(f) and 262.70—conditional exemption for farmers: Rules providing that Rhode Island is more stringent: 2.2 D.1, 2.2 D.5, 5.0—introduction, 7.0 B.4 and 8.1 A.1; 40 CFR 261.4(a)(14)—conditional exemption for shredded circuit boards being recycled: Rules providing that Rhode Island is more stringent: 2.2 C.8 and 13.2; 40 CFR 264.1(d) and 270.1(c)(1)(i)—permit by rule requirements for injection wells: Rules providing that Rhode Island is more stringent: 7.0 B.4, 7.0 B.78, and 8.1 A.1; 40 CFR 264.1(c) and 270.1(c)(1)(iii)—permit by rule requirements for ocean disposal: Rules providing that Rhode Island is more stringent: 7.0 B.4, 7.0 B.78 and 8.1 A.1; Various Federal regulations reducing requirements for performance track facilities: Rules providing that Rhode Island is more stringent in not reducing requirements for performance track facilities: 2.2 C.4, 2.2 F, 5.2 A, 7.0 B82, 8.1 A.17, 8.1 A.45 and 8.1 A.64; 40 CFR 263.12—temporary storage by transporters: more stringent State regulations in Rule 6.14, except for the Rule 6.14 G application fee requirement which is broader in scope; 40 CFR 265.174, as incorporated by reference by 262.34—inspection requirement for container areas: Rule 5.2 A., including more stringent State requirement incorporating by reference 40 CFR 265.15(d), thus requiring that generators keep inspection logs; 40 CFR 270.1(c)(2)(v) and 264.1(c)(10)—wastewater treatment unit exemption: Rules 7.0 B.8 and 8.1 A.6—incorporation by reference of Federal provisions and also all of the (equivalent or more stringent) state additional language within those Rules in parts 7.0B8(a) and 8.1A6(a), 7.0B8(b) and 8.1A6(b), 7.0B8(c) and 8.1A6(c), 7.0B8(e) and 8.1A6(e), and the language at the end of both Rules, and also including the restriction of the exemption to facilities with "on site" discharges in parts 7.0 B.8(d) and 8.1 A.6(d), except for the rest of parts 7.0 B.8(d) and 8.1 A.6(d), and the last sentence of both Rules, regarding zero discharge units, regarding which action is deferred. Note also: other (more stringent) State requirements relating to designating agents to sign manifests, non-adoption of reduced permitting requirements and other more minor changes, already have been authorized in the first through third paragraphs above, and thus need not be authorized here.

Finally, we are authorizing the Rhode Island regulations which update the State's regulations by incorporating by reference the EPA RCRA regulations through July 1, 2008 (and the U.S. DOT regulations referenced in the EPA regulations through October 1, 2008) [previously the State had incorporated by reference Federal requirements only through 2004]: Regarding 40 CFR parts 260–265, 266 (except for subpart H), 270, 273 and 124: Rules 2.2 A, 2.2 B, and the Rule 3.0 definitions of 40 CFR and 49 CFR (as applying through 2008); also regarding 40 CFR parts 260 and 261: Rule 2.2 C; also regarding 40 CFR part 262: Rule 2.2 D., also regarding 40 CFR part 263: Rule 2.2 E., also regarding 40 CFR part 266: Rule 2.2 H., also regarding 40 CFR part 273: Rule 2.2 J. For the updated authorizations relating to Treatment, Storage and Disposal Facilities—40 CFR parts 264, 265, 270 and 124, see the first and second paragraphs above.

In addition to today's authorizations, we previously authorized Rhode Island Rule 15.01 E as being equivalent to the Federal exemption for used oil filters in 40 CFR 261.4(b)(13). *See* 72 FR 70229, 70231, 70233 (Dec. 11, 2007). However, we inadvertently failed to credit Rhode Island for having met the requirements of Checklists 104 and 107 regarding oil used filters at that time. We are today confirming that by adopting Rule 15.01 E, Rhode Island has met the Federal requirements addressed by those two Checklists.

Some State provisions may be authorized more than once, as the same State regulation may address different Federal requirements. Whether a State provision is authorized once or is authorized more than once, the effect is the same in making the provision part of the Federally authorized program and subject to Federal enforcement.

Today's final authorization of new State regulations and regulation changes is in addition to the previous authorizations of State regulations. All previously authorized State regulations remain part of the authorized program.

H. Where are the revised State rules different from the Federal rules?

The most significant differences between the State rules being authorized and the Federal rules as of July 1, 2008, are summarized below. It should be noted that this summary does not describe every difference, or every detail regarding the differences that are described. Also, EPA is not reopening its previous authorization decisions regarding Rhode Island. Previous determinations regarding whether particular Rhode Island provisions are "more stringent," or "broader in scope," or different but "equivalent" are described in the prior rulemaking actions listed in Section F., above, rather than here. Members of the regulated community are advised to read the complete regulations, along with this **Federal Register** document and the previous **Federal Register** documents, to ensure that they understand all of the requirements with which they will need to comply.

In addition to the differences between the State regulations and the Federal regulations as of July 1, 2008, described in items 1 through 3, below, the State rules are different from the current (2010) Federal rules in that the State has not adopted the EPA's Definition of Solid Waste (DSW) Rule, which took effect at the Federal level on December 29, 2008. Since today's authorization of the State regulations addresses Federal requirements only through July 1, 2008, and since the EPA currently is considering whether to revise the DSW Rule, this authorization rulemaking

does not address the extent to which not adopting the DSW makes particular State requirements more stringent versus broader in scope. Rather, consideration of this matter is deferred.

Also, as part of its current update of its regulations, Rhode Island has amended the language regarding the Federal exemption for wastewater treatment units (WWTUs) in 40 CFR 270.1(c)(2)(v) and 264.1(g)(6), rather than simply incorporating these Federal provisions by reference. *See Rules* 7.0 B.8. and 8.1 A.6. One of the amendments is in Rule 7.0 B.8.(d) and 8.1 A.6.(d), where the State is specifying that its WWTU exemption applies only when a unit has a "current ongoing discharge to surface waters or the sewers" subject to regulation under section 402 or 307 of the Clean Water Act, and the State's water act. Thus the State is limiting the exemption to units which currently are discharging to the water, as opposed to zero discharge units which discharge to the air. The State regulations further specify that, "zero discharge units such as evaporators are not covered by this exemption, but rather must comply with the RCRA requirements for generators or Treatment Storage and Disposal Facilities, as applicable, in addition to any requirements specified in any permit issued by the Department's Office of Water Resources or a Publicly Owned Treatment Works." Also, as part of this amendment, at the end of Rules 7.0 B.8. and 8.1 A.6., the State regulations specify that since zero discharge units are not exempted from the State's RCRA regulations, "the hazardous waste requirements apply both to any hazardous wastewaters and any hazardous sludges, when either is generated." For example, this means that all hazardous wastewaters being sent to a zero discharge unit must be stored in accordance with hazardous waste requirements, and counted as hazardous wastes, and that the zero discharge unit itself must meet State hazardous waste requirements (tank standards), rather than the facility only having to handle hazardous sludges as hazardous wastes when they leave the zero discharge unit.

Whether this particular State amendment is different but equivalent to the Federal regulations, or more stringent, or broader in scope, depends upon how the Federal exemption is interpreted. How to interpret the Federal exemption currently is under review. Thus, consideration of this matter is deferred. EPA Region I will address in a future authorization rulemaking action whether this amendment should be authorized as equivalent to (or more stringent than) the Federal regulations, or should be classified as broader in scope.

It should be emphasized that any decision regarding whether to Federally authorize this amendment affects only whether it can be Federally enforced. The State regulations are in effect now and are enforceable under State law. Thus all regulated entities in Rhode Island must comply with them now. In particular, as specified in the State regulations, even those entities that have water permits covering their zero discharge units must also comply with the State hazardous waste requirements (if they have hazardous wastewaters or sludges). Persons with questions about how to comply with these new State requirements are encouraged to contact the RIDEM directly.

The other amendments that the State has made to the Federal WWTU exemption language are being authorized now, as explained in item 3, below.

1. More Stringent Provisions

There are aspects of the Rhode Island program which are more stringent than the Federal program. All of these more stringent requirements are, or will become, part of the Federally enforceable RCRA program when authorized by the EPA and must be complied with in addition to the State requirements which track the minimum Federal requirements. These more stringent requirements include the following:

First, as determined in our 2002 rulemaking action, Rhode Island is more stringent with regard to the regulation of Federal small quantity generators (SQGs) and Federal conditionally exempt small quantity generators (CESQGs). This is because Rhode Island regulates all hazardous waste generators using its full RCRA generator (LQG level) regulations, with some exceptions. Consistent with our 2002 rulemaking which authorized the basic Rhode Island regulations governing SQGs and CESQGs as more stringent, the EPA is today determining that certain recently added revisions to the Rhode Island regulations which reference these more stringent requirements are "more stringent." EPA is not reopening our 2002 determination to authorize the basic Rhode Island regulations governing SQGs and CESQGs as more stringent.

Second, Rhode Island regulates farmers disposing of used pesticides under its universal waste rule. This is more stringent than the EPA approach of exempting farmers from most RCRA requirements so long as the conditions in 40 CFR 262.70 are met.

Third, Rhode Island has not adopted the Federal conditional exemption in 40 CFR 261.4(a)(14) for shredded circuit boards being recycled. Instead, Rhode Island is regulating shredded circuit boards being recycled under its universal waste rule requirements for used electronics. This also is more stringent.

Fourth, Rhode Island does not allow the disposal of hazardous wastes through injection wells or the ocean disposal of hazardous wastes. This is more stringent than the EPA approach of allowing such disposals under RCRA permit-by-rule requirements.

Fifth, Rhode Island never adopted special regulations for Performance Track facilities. This is more stringent than the EPA regulations which have allowed special standards regarding some requirements for performance track facilities. It also should be noted that the EPA recently has terminated the performance track program. Thus Rhode Island's approach actually is now equivalent to the current EPA approach, rather than more stringent.

Sixth, Rhode Island regulates, more strictly and extensively than EPA, temporary storage of wastes by transporters and temporary transfer and storage facilities. Under the Federal regulations, temporary storage by transporters is allowed subject to the conditions that the hazardous wastes be stored in containers and for no more than 10 days. Rhode Island is imposing additional requirements including more detailed storage requirements, closure plans and financial assurance requirements, and a requirement to obtain State authorization for temporary transfer and storage facilities. Also, Rhode Island is setting a 72-hour plus Sundays and holidays time limit on storage, as opposed to the Federal 10-day time limit. The State requirements all are more stringent, other than the State application fee requirement which is broader in scope—see below.

Seventh, Rhode Island amended its regulation 5.2 A. in 2001 to specify that generators must keep inspection logs (in accordance with 265.15(d), in addition to meeting the minimum Federal requirement for generators (specified in 264.174, as incorporated by reference by 262.34) of doing container area inspections. This inspection log requirement is more stringent. In our 2002 authorization rulemaking, EPA authorized all of Rule 5.0 including this amendment, with respect to Federal SQGs and CESQGs. We are today again reauthorizing Rule 5.2 A. including the 2001 amendment to make clear that the requirement to keep an inspection log

also is Federally enforceable in the case of Federal LQGs.

Eighth, Rhode Island specifies in its regulations 5.9 and 8.1 A.24 that generators and TSDFs, respectively, must submit to the State the names and signatures of all agents authorized to sign the hazardous waste manifest. These State requirements build on the Federal requirements regarding properly filling out the manifest, and thus are more stringent.

Ninth, Rhode Island does not allow standardized RCRA permits, research, development and demonstration (RD & D) permits and land treatment demonstration permits. Instead, Rhode Island requires full RCRA permits where the Federal regulations would allow these kinds of permits. This is more stringent.

Tenth, there are other more minor differences between the Federal and State programs, where the State is being more stringent. In particular, the State has various more stringent provisions relating to the technical standards for TSDFs. These more stringent provisions are listed in the Checklists submitted by the State, which are part of the administrative record. Examples of these more stringent provisions are discussed in the memorandum entitled "More Stringent and Broader in Scope Determinations Made in 2010 Rhode Island RCRA Program Authorization," which also has been placed in the administrative record.

2. Broader in Scope Provisions

There also are aspects of the Rhode Island program which are broader in scope than the Federal program. The State requirements (or portions of State requirements) which are broader in scope are not considered to be part of the Federally enforceable RCRA program. However, they are fully enforceable under State law and must be complied with by sources in Rhode Island. These broader-in-scope provisions include the following:

First, Rhode Island regulates as hazardous wastes certain PCB wastes that are regulated at the Federal level under the Toxic Substances Control Act (TSCA) rather than RCRA. As determined in our 2002 rulemaking action, these State regulations are broader in scope. The State recently has adopted regulations (i) specifying that it does not exempt PCB incineration facilities from its RCRA permit requirement and (ii) granting an exemption from certain hazardous waste transportation requirements to certain utilities handling the PCB wastes. Consistent with our 2002 authorization decision that the State's regulations covering PCB wastes generally are broader in scope, we are today classifying these new regulations as broader in scope.

Second, EPA unconditionally exempts from hazardous waste regulation scrap metal being recycled. In guidance, EPA has classified intact circuit boards as scrap metal, when they do not contain mercury switches, mercury relays, nickel-cadmium batteries or lithium batteries. Rhode Island has decided to regulate circuit boards, as used electronics under its universal waste rule, even when EPA excludes them from regulation under the scrap metal exemption. To the extent that the State is regulating circuit boards that the EPA does not regulate, this is broader in scope.

Third, the State is regulating as hazardous wastes both 'coal ash' and petroleum-contaminated media and debris. These are currently excluded from Federal RCRA regulation, although the EPA is now considering whether to regulate 'coal ash' as a Federal hazardous waste. Thus these State regulations (currently) are broader in scope.

Fourth, manufactured gas plant (MGP) waste is excluded from the TCLP testing requirement and thus in effect excluded from hazardous waste regulation, by Federal regulation 261.24. While also excluding MGP waste when certain conditions are met, Rhode Island is continuing to regulate this waste stream when those conditions are not met. This State regulation also is broader in scope.

Fifth, Rhode Island generally follows the Federal RCRA exemption for household hazardous waste. However, Rhode Island regulates facilities which accept household hazardous wastes, as generators, under its hazardous waste regulations. These State regulations are broader in scope.

Sixth, in its universal waste program, Rhode Island regulates certain dry cell batteries (i.e., waste-nickel cadmium, mercuric oxide, and lead acid dry cell batteries), used electronics, mercury containing equipment and mercury-containing lamps, even when they are not Federal hazardous wastes. To the extent, and only to the extent, that Rhode Island is regulating as universal wastes particular materials that are not Federal hazardous wastes, it is being broader in scope. The broader-in-scope wastes include materials which pass the TCLP test (*e.g.,* fluorescent bulbs with very low levels of mercury) and materials that for other reasons are not classified as Federal solid and hazardous wastes (*i.e.,* CRTs that have met the Federal conditions for being excluded from the definition of solid waste). Rhode Island also is broader in scope in that it regulates certain wastes as universal wastes even when they are generated by households. *See* Rule 13.5 E. The result is that under State law these wastes generally must be disposed through household hazardous waste collection programs.

Seventh, as part of the current update of its regulations, Rhode Island is specifying the fees that it charges for TSDF permit applications and for applications for Transporter Temporary Transfer and Storage Facilities. These regulations are broader in scope.

3. Equivalent but Different Provisions

While many State regulations track Federal requirements identically or on a line-by-line basis, some differ from the Federal regulations in ways that nevertheless are equivalent to the Federal regulations in providing the same overall level of environmental protection with respect to each Federal requirement. There are various Rhode Island regulations which differ from but have been determined to be equivalent to the Federal regulations. These regulations are part of the Federally enforceable RCRA program. These different but equivalent requirements include the following:

First, as part of its current update of its regulations, Rhode Island has amended the language regarding the Federal exemption for wastewater treatment units (WWTUs) in 40 CFR 270.1(c)(2)(v) and 40 CFR 264.1(g)(6), rather than simply incorporating these Federal provisions by reference. *See* Rules 7.0 B.8. and 8.1 A.6. As explained above, the decision regarding how to classify and whether to authorize the Rhode Island amendment regarding zero discharge units is being deferred. As explained below, the other Rhode Island amendments are different from but equivalent to the Federal regulations.

In Rule 7.0 B.8.(a) and 8.1 A.6.(a), the State specifies that for purposes of its RCRA regulations, WWTUs are defined as units that are handling hazardous wastes. The State's language is equivalent to a portion of the Federal definition of WWTU in 40 CFR 260.10.

In Rule 7.0 B.8.(b) and 8.1 A.6.(b), the State specifies that WWTUs may only be used to legitimately treat wastewaters as defined at 47 FR 4706 (Feb. 2, 1982). The State regulations further specify that the disposal of concentrated wastes down the drain into WWTUs is prohibited. In the above 1982 **Federal Register** document incorporated by reference by the State regulations, the EPA also has interpreted the WWTU exemption as not allowing for the dumping of concentrated wastes down

the drain (into WWTUs). Thus, this State amendment also is equivalent to the Federal regulations (as interpreted).

In Rule 7.0 B.8.(c) and 8.1 A.6.(c), the State specifies that the WWTU exemption applies only to tank systems, and not to wastewaters when stored or transported in containers. For example, if a company generates a hazardous wastewater and stores it in containers before pouring the wastewaters from the containers into a wastewater treatment tank, the container storage will be regulated by RCRA. This also is equivalent to the Federal regulations, which also limit the WWTU exemption to tanks and tank systems. *See* 40 CFR 260.10.

In Rule 7.0 B.8(d) and 8.1 A.6(d), the State specifies that for facilities sending their hazardous wastewaters to surface waters or the sewers, the exemption applies only when the discharge point is "on site." Thus, for example, if a generator plans to truck hazardous wastewaters to a POTW, it must handle them in accordance with the generator requirements while on site, and must ship them under manifest. EPA has interpreted the Federal WWTU exemption in this same way. Thus, this State amendment is equivalent to the EPA regulations (as interpreted).

In Rule 7.0 B.8.(e) and 8.1 A.6.(e), the State specifies that the WWTU exemption applies only to those units that have been specifically described in a water permit application (e.g., in a schematic diagram) and specifically referenced in a water permit as being part of the facilities subject to water program regulation. Under the Federal regulations, the exemption similarly is limited to those units that are part of wastewater treatment facilities that are subject to regulation under section 402 or 307(b) of the Clean Water Act. The State amendment is designed to ensure that companies are including under the exemption only units that legitimately are part of their wastewater treatment facilities. Thus, the State amendment helps to ensure that there is compliance with the Federal provision. Thus, the State amendment is equivalent to (or more stringent than) the Federal provision, as opposed to being broader in scope.

Finally, the State regulations specify at the end of Rules 7.0 B.8. and 8.1 A.6. that any hazardous wastes generated from a WWTU must be managed in accordance with the State's hazardous waste requirements, once it leaves the exempt WWTU, e.g., when a sludge is stored in containers on site. This also is consistent with the way in which the Federal regulations have been interpreted. Thus this State provision also is equivalent to the Federal regulations (as interpreted).

Another way in which the Rhode Island regulations are different from but equivalent to the Federal regulations relates to the regulation of universal wastes. In addition to the batteries, pesticides, mercury containing equipment and mercury containing lamps (fluorescent bulbs) regulated by the EPA as universal wastes, Rhode Island is regulating used electronics (including cathode ray tubes and circuit boards) and silver-containing photo fixing solutions as universal wastes. Except when applied to materials that are not Federal hazardous wastes—see discussions under item 2, above, these Rhode Island regulations are equivalent to the Federal regulations rather than being broader in scope. Except as described under item 2 above, Rhode Island is regulating materials that also are regulated by the EPA in the hazardous waste program. The EPA also believes that such State regulations are not less stringent than the EPA regulations. Although Rhode Island is regulating as universal wastes some materials that are regulated as full hazardous wastes under the Federal regulations, Rhode Island has the authority as an authorized State to classify appropriate materials as universal wastes, subject to having appropriate State management standards. Just as the EPA may add additional wastes to its universal waste rule through the Petition Process set forth in 40 CFR part 273, subpart G, an authorized State may add additional universal wastes to its universal waste rule through an equivalent process. EPA Region I has reviewed the State's proposals to include used electronics and silver-containing photo fixing solutions as universal wastes, and agrees that these wastestreams are appropriate for inclusion as universal wastes and that Rhode Island has adopted appropriate protective management standards for these wastes.

I. How does today's action affect Indian country (18 U.S.C. 115) in Rhode Island?

Rhode Island is not authorized to carryout its hazardous waste program in Indian country within the State which includes the land of the Narragansett Indian Tribe. Therefore, this action has no effect on Indian country. EPA will continue to implement and administer the RCRA program in these lands.

J. Who handles permits after the authorization takes effect?

Rhode Island will issue permits for all the provisions for which it is authorized and will administer the permits it issues. EPA will continue to administer and enforce any RCRA and HSWA (Hazardous and Solid Waste Act) permits or portions of permits which it has issued in Rhode Island prior to the effective date of this authorization until the State incorporates the terms and conditions of the Federal permits into the State RCRA permits. EPA will not issue any more new permits, or new portions of permits, for the provisions listed in this document above after the effective date of this authorization. EPA will continue to implement and issue permits for any HSWA requirements for which Rhode Island is not yet authorized.

K. What is codification and is EPA codifying Rhode Island's hazardous waste program as authorized in this rule?

Codification is the process of placing the State's statutes and regulations that comprise the State's authorized hazardous waste program into the Code of Federal Regulations. We do this by referencing the authorized State rules in 40 CFR part 272. We reserve the amendment of 40 CFR part 272, subpart UU for this authorization of Rhode Island's program until a later date.

L. Administrative Requirements

The Office of Management and Budget has exempted this action (RCRA State Authorization) from the requirements of Executive Order 12866 (58 FR 51735, October 4, 1993); therefore, this action is not subject to review by OMB. This action authorizes State requirements for the purpose of RCRA 3006 and imposes no additional requirements beyond those imposed by State law. Accordingly, I certify that this action will not have a significant economic impact on a substantial number of small entities under the Regulatory Flexibility Act (5 U.S.C. 601 *et seq.*). Because this action authorizes pre-existing requirements under State law and does not impose any additional enforceable duty beyond that required by State law, it does not contain any unfunded mandate or significantly or uniquely affect small governments, as described in the Unfunded Mandates Reform Act of 1995 (Pub. L. 104–4). For the same reason, this action also does not significantly or uniquely affect Tribal governments, as specified by Executive Order 13175 (65 FR 67249, November 9, 2000). This action will not have substantial direct effects on the States, on the relationship between the national government and the States, or on the distribution of power and responsibilities among the various

levels of government, as specified in Executive Order 13132 (64 FR 43255, August 10, 1999), because it merely authorizes State requirements as part of the State RCRA hazardous waste program without altering the relationship or the distribution of power and responsibilities established by RCRA. This action also is not subject to Executive Order 13045 (62 FR 19885, April 23, 1997), because it is not economically significant and it does not make decisions based on environmental health or safety risks. This rule is not subject to Executive Order 13211, "Actions Concerning Regulations That Significantly Affect Energy Supply, Distribution, or Use" (66 FR 28355 (May 22, 2001)) because it is not a significant regulatory action under Executive Order 12866.

Under RCRA 3006(b), EPA grants a State's application for authorization as long as the State meets the criteria required by RCRA. It would thus be inconsistent with applicable law for EPA, when it reviews a State authorization application, to require the use of any particular voluntary consensus standard in place of another standard that otherwise satisfies the requirements of RCRA. Thus, the requirements of section 12(d) of the National Technology Transfer and Advancement Act of 1995 (15 U.S.C. 272 note) do not apply. As required by section 3 of Executive Order 12988 (61 FR 4729, February 7, 1996), in issuing this rule, EPA has taken the necessary steps to eliminate drafting errors and ambiguity, minimize potential litigation, and provide a clear legal standard for affected conduct. EPA has complied with Executive Order 12630 (53 FR 8859, March 15, 1988) by examining the takings implications of the rule in accordance with the "Attorney General's Supplemental Guidelines for the Evaluation of Risk and Avoidance of Unanticipated Takings" issued under the executive order. This rule does not impose an information collection burden under the provisions of the Paperwork Reduction Act of 1995 (44 U.S.C. 3501 *et seq.*).

The Congressional Review Act, 5 U.S.C. 801 *et seq.,* as added by the Small Business Regulatory Enforcement Fairness Act of 1996, generally provides that before a rule may take effect, the agency promulgating the rule must submit a rule report, which includes a copy of the rule, to each House of the Congress and to the Comptroller General of the United States. EPA will submit a report containing this document and other required information to the U.S. Senate, the U.S. House of Representatives, and the Comptroller General of the United States prior to publication in the **Federal Register**. A major rule cannot take effect until 60 days after it is published in the **Federal Register**. This action is not a "major rule" as defined by 5 U.S.C. 804(2). This action nevertheless will be effective 60 days after it is published, because it is an immediate final rule.

List of Subjects in 40 CFR Part 271

Environmental protection, Administrative practice and procedure, Confidential business information, Hazardous waste, Hazardous waste transportation, Indian lands, Intergovernmental relations, Penalties, Reporting and recordkeeping requirements.

Authority: This action is issued under the authority of sections 2002(a), 3006 and 7004(b) of the Solid Waste Disposal Act as amended 42 U.S.C. 6912(a), 6926, 6974(b).

Dated: July 7, 2010.

H. Curtis Spalding,

Regional Administrator, EPA New England.

[FR Doc. 2010–18235 Filed 7–23–10; 8:45 am]

BILLING CODE 6560–50–P

DEPARTMENT OF HOMELAND SECURITY

Federal Emergency Management Agency

44 CFR Part 67

[Docket ID FEMA–2010–0003]

Final Flood Elevation Determinations

AGENCY: Federal Emergency Management Agency, DHS.

ACTION: Final rule.

SUMMARY: Base (1% annual-chance) Flood Elevations (BFEs) and modified BFEs are made final for the communities listed below. The BFEs and modified BFEs are the basis for the floodplain management measures that each community is required either to adopt or to show evidence of being already in effect in order to qualify or remain qualified for participation in the National Flood Insurance Program (NFIP).

DATES: The date of issuance of the Flood Insurance Rate Map (FIRM) showing BFEs and modified BFEs for each community. This date may be obtained by contacting the office where the maps are available for inspection as indicated in the table below.

ADDRESSES: The final BFEs for each community are available for inspection at the office of the Chief Executive Officer of each community. The respective addresses are listed in the table below.

FOR FURTHER INFORMATION CONTACT: Kevin C. Long, Acting Chief, Engineering Management Branch, Federal Insurance and Mitigation Administration, Federal Emergency Management Agency, 500 C Street, SW., Washington, DC 20472, (202) 646–2820, or (e-mail) *kevin.long@dhs.gov.*

SUPPLEMENTARY INFORMATION: The Federal Emergency Management Agency (FEMA) makes the final determinations listed below for the modified BFEs for each community listed. These modified elevations have been published in newspapers of local circulation and ninety (90) days have elapsed since that publication. The Deputy Federal Insurance and Mitigation Administrator has resolved any appeals resulting from this notification.

This final rule is issued in accordance with section 110 of the Flood Disaster Protection Act of 1973, 42 U.S.C. 4104, and 44 CFR part 67. FEMA has developed criteria for floodplain management in floodprone areas in accordance with 44 CFR part 60.

Interested lessees and owners of real property are encouraged to review the proof Flood Insurance Study and FIRM available at the address cited below for each community. The BFEs and modified BFEs are made final in the communities listed below. Elevations at selected locations in each community are shown.

National Environmental Policy Act. This final rule is categorically excluded from the requirements of 44 CFR part 10, Environmental Consideration. An environmental impact assessment has not been prepared.

Regulatory Flexibility Act. As flood elevation determinations are not within the scope of the Regulatory Flexibility Act, 5 U.S.C. 601–612, a regulatory flexibility analysis is not required.

Regulatory Classification. This final rule is not a significant regulatory action under the criteria of section 3(f) of Executive Order 12866 of September 30, 1993, Regulatory Planning and Review, 58 FR 51735.

Executive Order 13132, Federalism. This final rule involves no policies that have federalism implications under Executive Order 13132.

Executive Order 12988, Civil Justice Reform. This final rule meets the applicable standards of Executive Order 12988.

List of Subjects in 44 CFR Part 67

Administrative practice and procedure, Flood insurance, Reporting and recordkeeping requirements.

■ Accordingly, 44 CFR part 67 is amended as follows:

PART 67—[AMENDED]

■ 1. The authority citation for part 67 continues to read as follows:

Authority: 42 U.S.C. 4001 *et seq.;* Reorganization Plan No. 3 of 1978, 3 CFR, 1978 Comp., p. 329; E.O. 12127, 44 FR 19367, 3 CFR, 1979 Comp., p. 376.

§ 67.11 [Amended]

■ 2. The tables published under the authority of § 67.11 are amended as follows:

State	City/town/county	Source of flooding	Location	* Elevation in feet (NGVD) + Elevation in feet (NAVD) # Depth in feet above ground ∧ Elevation in meters (MSL) Modified
City of Williston, North Dakota Docket No.: FEMA–B–1060				
North Dakota	City of Williston	Sand Creek	Approximately 105 feet downstream of Riverside Drive West.	+1,852
			Approximately 2.57 miles upstream of 11th Street.	+1,941

* National Geodetic Vertical Datum.
+ North American Vertical Datum.
# Depth in feet above ground.
∧ Mean Sea Level, rounded to the nearest 0.1 meter.

ADDRESSES

City of Williston
Maps are available for inspection at 22 East Broadway, Williston, ND 58802.

Flooding source(s)	Location of referenced elevation	* Elevation in feet (NGVD) + Elevation in feet (NAVD) # Depth in feet above ground ∧ Elevation in meters (MSL) Modified	Communities affected
Greene County, Alabama, and Incorporated Areas Docket No.: FEMA–B–1049			
Boligee Canal	Approximately 1,372 feet downstream of County Road 81	+117	City of Boligee.
	Approximately 193 feet upstream of County Road 81	+117	
Tombigbee River	Approximately 2.97 miles upstream of I–20	+117	City of Boligee.

* National Geodetic Vertical Datum.
+ North American Vertical Datum.
# Depth in feet above ground.
∧ Mean Sea Level, rounded to the nearest 0.1 meter.

ADDRESSES

City of Boligee
Maps are available for inspection at 8 City Hall Circle, Boligee, AL 35443.

Glenn County, California, and Incorporated Areas Docket No.: FEMA–B–1056			
Butte Creek	Approximately 2,270 feet downstream of Aguas Frias Road.	+105	Unincorporated Areas of Glenn County.
	Just upstream of Aguas Frias Road	+108	
Butte Creek (Outside of Levee)	Approximately 3,230 feet downstream of Aguas Frias Road.	+97	Unincorporated Areas of Glenn County.
	Just upstream of Aguas Frias Road	+97	

* National Geodetic Vertical Datum.
+ North American Vertical Datum.
# Depth in feet above ground.
∧ Mean Sea Level, rounded to the nearest 0.1 meter.

Flooding source(s)	Location of referenced elevation	* Elevation in feet (NGVD) + Elevation in feet (NAVD) # Depth in feet above ground ∧ Elevation in meters (MSL) Modified	Communities affected

ADDRESSES

Unincorporated Areas of Glenn County

Maps are available for inspection at 777 North Colusa Street, Willows, CA 95988.

Perry County, Illinois, and Incorporated Areas
Docket No.: FEMA–B–1060

Beaucoup Creek	Approximately 200 feet upstream of railroad at the east end of Cedar Point Lane.	+407	Unincorporated Areas of Perry County.
	Approximately 913 feet upstream of the confluence with Railroad Tributary.	+416	

* National Geodetic Vertical Datum.
+ North American Vertical Datum.
# Depth in feet above ground.
∧ Mean Sea Level, rounded to the nearest 0.1 meter.

ADDRESSES

Unincorporated Areas of Perry County

Maps are available for inspection at the Perry County Courthouse, 1 Public Square, Pinckneyville, IL 62274.

Schuyler County, Illinois, and Incorporated Areas
Docket No.: FEMA–B–1053

Illinois River	Approximately 0.4 mile downstream of the confluence with the La Moine River.	+450	Unincorporated Areas of Schuyler County, Village of Browning.
	Approximately 2.55 miles upstream of the confluence with Elm Creek.	+452	

* National Geodetic Vertical Datum.
+ North American Vertical Datum.
# Depth in feet above ground.
∧ Mean Sea Level, rounded to the nearest 0.1 meter.

ADDRESSES

Unincorporated Areas of Schuyler County

Maps are available for inspection at the Schuyler County Highway Department, 121 Henninger Drive, Rushville, IL 62681.

Village of Browning

Maps are available for inspection at the Village Hall, 501 Main Street, Browning, IL 62624.

St. Landry Parish, Louisiana, and Incorporated Areas
Docket No.: FEMA–B–1040

Bayou Belleview	Approximately 330 feet downstream of George Street	+68	Unincorporated Areas of St. Landry Parish.
	Approximately 125 feet upstream of Gulino Street	+70	
Bayou Tesson	Approximately 450 feet upstream of Caddo Street	+68	City of Opelousas, Unincorporated Areas of St. Landry Parish.
	Approximately 100 feet upstream of Park Street	+70	
Flooding Effects of Unnamed Canal/Ditch.	Approximately 350 feet east of Palm Street	+25	Town of Port Barre.
	Approximately 1,800 feet west of State Highway 741 and 25 feet north of U.S. Route 190.	+25	

* National Geodetic Vertical Datum.
+ North American Vertical Datum.
# Depth in feet above ground.
∧ Mean Sea Level, rounded to the nearest 0.1 meter.

ADDRESSES

City of Opelousas

Maps are available for inspection at 318 North Court Street, Opelousas, LA 70570.

Town of Port Barre

Maps are available for inspection at 504 Saizan Avenue, Port Barre, LA 70577.

Flooding source(s)	Location of referenced elevation	* Elevation in feet (NGVD) + Elevation in feet (NAVD) # Depth in feet above ground ∧ Elevation in meters (MSL) Modified	Communities affected
Unincorporated Areas of St. Landry Parish			
Maps are available for inspection at 308 West Bloch Street, Opelousas, LA 70571.			
Lincoln County, Nevada, and Incorporated Areas Docket Nos.: FEMA–B–1054 and FEMA–B–107			
Clover Creek	Approximately 280 feet upstream of the confluence with Meadow Valley Wash (Near Caliente).	+4,409	City of Caliente, Unincorporated Areas of Lincoln County.
	Approximately 2.4 miles upstream of the confluence with Meadow Valley Wash (Near Caliente).	+4,473	
Meadow Valley Wash (Near Caliente).	Approximately 0.73 mile downstream of Union Pacific Railroad.	#2	City of Caliente, Unincorporated Areas of Lincoln County.
	Approximately 0.73 mile downstream of Union Pacific Railroad.	+4,329	
	Approximately 1,540 feet downstream of Union Pacific Railroad.	#3	
	Approximately 674 feet upstream of U.S. Route 93	+4,438	
Meadow Valley Wash (Near Ursine).	Approximately 1.0 mile downstream of North Eagle Valley Road.	+5,543	Unincorporated Areas of Lincoln County.
	Approximately 1,150 feet upstream of North Eagle Valley Road.	+5,607	

* National Geodetic Vertical Datum.
+ North American Vertical Datum.
# Depth in feet above ground.
∧ Mean Sea Level, rounded to the nearest 0.1 meter.

ADDRESSES

City of Caliente
Maps are available for inspection at 100 Depot Avenue, Caliente, NV 89008.

Unincorporated Areas of Lincoln County
Maps are available for inspection at the Lincoln County Planning and Zoning Department, 181 Main Street, Suite 107, Pioche, NV 89043.

Flooding source(s)	Location of referenced elevation	* Elevation in feet (NGVD) + Elevation in feet (NAVD) # Depth in feet above ground ∧ Elevation in meters (MSL) Modified	Communities affected
Curry County, New Mexico, and Incorporated Areas Docket No.: FEMA–B–1021			
Northeast Drain	Approximately 5,276 feet downstream of Humphry Road	+4,216	City of Clovis, Unincorporated Areas of Curry County.
	At the confluence with West 2nd Street Drain	+4,217	
	Approximately 645 feet upstream of Schepps Boulevard	+4,225	
	Just upstream of Merlene Boulevard	+4,236	
Thomas Ditch 1	Approximately at Brady Avenue	+4,262	Unincorporated Areas of Curry County.
	Approximately at Burlington Northern Santa Fe Railroad	+4,280	
West Second Street Drain	At the confluence with Northeast Drain	+4,217	Unincorporated Areas of Curry County.
	Approximately 268 feet upstream of Norris Road	+4,232	

* National Geodetic Vertical Datum.
+ North American Vertical Datum.
# Depth in feet above ground.
∧ Mean Sea Level, rounded to the nearest 0.1 meter.

ADDRESSES

City of Clovis
Maps are available for inspection at 321 Connelly Street, Clovis, NM 88101.

Unincorporated Areas of Curry County
Maps are available for inspection at 321 Connelly Street, Clovis, NM 88101.

Flooding source(s)	Location of referenced elevation	* Elevation in feet (NGVD) + Elevation in feet (NAVD) # Depth in feet above ground ∧ Elevation in meters (MSL) Modified	Communities affected
San Juan County, New Mexico, and Incorporated Areas Docket No.: FEMA–B–1028			
Animas River	At the confluence with the San Juan River	+5,256	Unincorporated Areas of San Juan County.

Flooding source(s)	Location of referenced elevation	* Elevation in feet (NGVD) + Elevation in feet (NAVD) # Depth in feet above ground ∧ Elevation in meters (MSL) Modified	Communities affected
	Approximately 1,200 feet downstream of Murray Drive/U.S. Route 64.	+5,267	
Bloomfield Canyon Creek	Approximately 2,232 feet upstream of East Broadway Avenue.	+5,436	City of Bloomfield, Unincorporated Areas of San Juan County.
	At the confluence with Bloomfield Canyon Creek Tributary	+5,545	
Bloomfield Canyon Creek Tributary.	At the confluence with Bloomfield Canyon Creek	+5,545	City of Bloomfield, Unincorporated Areas of San Juan County.
	Approximately 2,366 feet upstream of Unnamed Dirt Road Bridge.	+5,737	
San Juan River	Approximately 1,709 feet downstream of Bisti Highway	+5,245	Unincorporated Areas of San Juan County.
	Approximately 9,367 feet upstream of the confluence with the Animas River.	+5,269	

* National Geodetic Vertical Datum.
+ North American Vertical Datum.
# Depth in feet above ground.
∧ Mean Sea Level, rounded to the nearest 0.1 meter.

ADDRESSES

City of Bloomfield
Maps are available for inspection at 915 North 1st Street, Bloomfield, NM 87413.

Unincorporated Areas of San Juan County
Maps are available for inspection at 209 South Oliver Drive, Aztec, NM 87410.

Ottawa County, Oklahoma, and Incorporated Areas
Docket No.: FEMA–B–1049

Belmont Run	Approximately 1,317 feet upstream of 30th Avenue	+803	City of Miami, Town of North Miami, Unincorporated Areas of Ottawa County.
	Approximately 1,288 feet upstream of Newman Road	+805	
Fairgrounds Branch	Approximately 700 feet upstream of E Street	+774	Unincorporated Areas of Ottawa County.
	Approximately 0.58 mile upstream of E Street	+774	
Neosho River	Just upstream of E Street	+775	Unincorporated Areas of Ottawa County.
	Approximately 0.93 mile upstream of State Highway 69	+776	
Warren Branch	Approximately 434 feet upstream of Main Street	+869	Town of Peoria, Unincorporated Areas of Ottawa County.
	Approximately 1,826 feet upstream of Modoe Street	+885	
Wyandotte Ditch	Approximately 1,320 feet downstream of Main Street	+757	Town of Wyandotte.
	Approximately 904 feet upstream of South 650 Road	+789	

* National Geodetic Vertical Datum.
+ North American Vertical Datum.
# Depth in feet above ground.
∧ Mean Sea Level, rounded to the nearest 0.1 meter.

ADDRESSES

City of Miami
Maps are available for inspection at the Civic Center, 129 5th Street Northwest, Miami, OK 74354.

Town of North Miami
Maps are available for inspection at the Ottawa County Courthouse, 102 East Central Avenue, Suite 202, Miami, OK 74354.

Town of Peoria
Maps are available for inspection at the Ottawa County Courthouse, 102 East Central Avenue, Suite 202, Miami, OK 74354.

Town of Wyandotte
Maps are available for inspection at City Hall, 14 North Main Street, Wyandotte, OK 74370.

Unincorporated Areas of Ottawa County
Maps are available for inspection at the County Courthouse, 102 East Central Avenue, Suite 202, Miami, OK 74354.

Flooding source(s)	Location of referenced elevation	* Elevation in feet (NGVD) + Elevation in feet (NAVD) # Depth in feet above ground ∧ Elevation in meters (MSL) Modified	Communities affected
Teton County, Wyoming, and Incorporated Areas Docket No.: FEMA–B–7774			
Flat Creek	Approximately 5,100 feet south of the intersection of Wilson Canyon Drive and U.S. Route 89.	*5,974	Unincorporated Areas of Teton County.
	Approximately 1,350 feet downstream of High School Road.	*6,107	

* National Geodetic Vertical Datum.
+ North American Vertical Datum.
# Depth in feet above ground.
∧ Mean Sea Level, rounded to the nearest 0.1 meter.

ADDRESSES

Unincorporated Areas of Teton County

Maps are available for inspection at the Teton County Administration Building, 200 South Willow Street, Jackson, WY 83001.

(Catalog of Federal Domestic Assistance No. 97.022, "Flood Insurance.")

Dated: July 19, 2010.

Sandra K. Knight,

Deputy Federal Insurance and Mitigation Administrator, Mitigation, Department of Homeland Security, Federal Emergency Management Agency.

[FR Doc. 2010–18195 Filed 7–23–10; 8:45 am]

BILLING CODE 9110–12–P

FEDERAL COMMUNICATIONS COMMISSION

47 CFR Part 95

[WT Docket No. 98–182; FCC 10–106]

1998 Biennial Regulatory Review—Private Land Mobile Radio Services

AGENCY: Federal Communications Commission.

ACTION: Final rule; petition for reconsideration.

SUMMARY: In this document, the Commission denies the petition filed by the Personal Radio Steering Group (PRSG) regarding certain Multi-Use Radio Service (MURS) rules. In essence, the Commission finds that PRSG has not demonstrated that the changes it seeks are necessary and are in the public interest. Accordingly, there is no change to the CFR.

DATES: Effective July 26, 2010.

FOR FURTHER INFORMATION CONTACT: B.C. "Jay" Jackson, Jr., Mobility Division, Wireless Telecommunications Bureau, *jay.jackson@fcc.gov,* 202–418–1309.

SUPPLEMENTARY INFORMATION: This is a summary of the Federal Communications Commission's *Memorandum Opinion and Order on Reconsideration* (MO&O on Recon.) in WT Docket No. 98–182, FCC 10–106, adopted on June 1, 2010, and released on June 7, 2010. Contemporaneous with this document, the Commission issues a *Notice of Proposed Rule Making* (published elsewhere in this publication). The complete text of this document may be downloaded from the FCC Web site (*http://www.fcc.gov*) at *http://hraunfoss.fcc.gov/edocs_public/attachmatch/FCC-10-106A1.pdf*. This document and all related Commission documents is also available for inspection and copying during normal business hours in the FCC Reference Center, 445 12th Street, SW., Washington, DC 20554. A copy of the complete text may also be purchased from the Commission's copy contractor, Best Copy and Printing, Inc., 445 12th Street, SW., Room CY–B402, Washington, DC 20554. Alternative formats are available to persons with disabilities by sending an e-mail to *FCC504@fcc.gov* or by calling the Consumer & Governmental Affairs Bureau at 202–418–0530 (voice), 202–418–0432 (tty).

Synopsis

1. In the *Report and Order,* 15 FCCR 16673, 16688 para. 31 (2000), in WT Docket No. 98–182, the Federal Communications Commission ("Commission") reallocated five frequencies to the newly-created Multi-Use Radio Service (MURS), a two-way, short-distance, voice, data or image communication service for the personal or business activities of the general public. In response to petitions for reconsideration, the Commission affirmed its decision to license MURS by rule, but adopted additional technical restrictions designed to address concerns expressed by grandfathered (*i.e.,* pre-MURS) users of the five frequencies. See *Memorandum Opinion and Order (MO&O)* at 67 FR 63279, October 11, 2002, in WT Docket No. 98–182. PRSG filed a petition for reconsideration of certain aspects of the *MO&O.* Specifically, PRSG requests that the Commission (1) reconsider prohibiting MURS radios from interconnecting with the public switched telephone network (PSTN); (2) require MURS radios to have automatic monitoring, a feature that prevents the radio from transmitting on a channel that is already in use; and (3) revisit the grandfathering privileges extended to pre-MURS business and industrial licensees that had facilities operating on the MURS frequencies.

2. *Interconnection.* The Commission prohibited interconnecting MURS transmitters with the PSTN. It concluded that such interconnection would be inappropriate for MURS because of the limited number of channels and the importance of spectrum sharing. PRSG supports the prohibition on interconnection, but asserts that the regulatory language adopted by the Commission is imprecise and antiquated. PRSG argues that the rule should address issues such as connecting to networks other than the PSTN. No commenting party supports PRSG's request. The Commission finds that the interconnection prohibition contained in 47 CFR 95.1313 is sufficiently clear, and that no changes are needed.

3. *Monitoring.* Because MURS channels are shared, the Commission requires operators to monitor the transmitting frequency for communications in progress before transmitting. PRSG argues that the Commission should go further and require automatic monitoring, so that MURS radios could transmit only after monitoring the channel for a specified minimum period (at least several seconds). PRSG does not explain why automatic monitoring is necessary for MURS. Of the other Personal Radio services, only the Medical Device Radiocommunications Service (MedRadio) has an automatic monitoring requirement. There are obvious differences between the two services. MedRadio is used to transmit medical data in support of the diagnostic and/or therapeutic functions associated with implanted or body-worn medical devices such as cardiac pacemakers and defibrillators. The automatic monitoring requirement helps avoid interference to these health-related transmissions. No such need for automatic monitoring has been demonstrated with respect to MURS. The Commission finds that PRSG's proposal should not be adopted, because imposing an automatic monitoring requirement could stifle innovation and raise equipment costs without providing any corresponding public interest benefit.

4. *Grandfathering.* The Commission grandfathered and licensed by rule all previously licensed operations on the MURS frequencies, including operations that employed parameters inconsistent with the technical restrictions of the MURS rules. PRSG requests that the Commission continue to require such stations to have a license, and require renewal of grandfathered licenses that operate at variance with current and future MURS requirements. It also requests that parties operating under grandfathered privileges identify their stations by FCC call sign and that the operating parameters of these grandfathered licenses be contained in the FCC's publicly accessible license database. PRSG argues that otherwise, MURS operators have no way of knowing if others are operating permissibly under grandfathered privileges or improperly in violation of the MURS rules.

5. Information on former licenses for the MURS frequencies continues to be publicly available on the Commission's Universal Licensing System, including licenses that have expired. Thus the public can search the database by frequency to locate such grandfathered users. Consequently, the Commission concludes that further licensing is not needed for MURS users to be able to identify grandfathered operations. The Commission also notes that requiring grandfathered stations to transmit a call sign could confuse MURS users.

Ordering Clauses

6. Pursuant to sections 4(i), 4(j), and 303(r) of the Communications Act of 1934, as amended, 47 U.S.C. 154(i), 154(j), 303(r), *notice is hereby given* of the proposed amendments to parts 1, 27, and 95 of the Commission's rules, 47 CFR parts 1, 27, and 95, as discussed herein, and that *comment is sought* on these proposals.

7. Pursuant to sections 4(i), 303(f), 303(r), and 332 of the Communications Act of 1934, as amended, 47 U.S.C. 154(i), 303(f), 303(r), 332, this *Memorandum Opinion and Order on Reconsideration is adopted.*

8. Pursuant to sections 4(i), 4(j), and 303(r) of the Communications Act of 1934, as amended, 47 U.S.C. 154(i), 154(j), 303(r), and § 1.407 of the Commission's rules, 47 CFR 1.407, the petition for rulemaking filed by Garmin International, Inc., RM–10762, on July 22, 2003 *is granted* to the extent stated herein.

9. Pursuant to sections 4(i), 4(j), and 303(r) of the Communications Act of 1934, as amended, 47 U.S.C. 154(i), 154(j), 303(r), and § 1.407 of the Commission's rules, 47 CFR 1.407, the petition for rulemaking filed by Omnitronics, L.L.C., RM–10844, on December 17, 2003 *is granted* to the extent stated herein.

10. Pursuant to sections 4(i) and 4(j) of the Communications Act of 1934, as amended, 47 U.S.C. 154(i), 154(j), and § 1.106(j) of the Commission's rules, 47 CFR 1.106(j), the petition for reconsideration filed by the Personal Radio Steering Group in WT Docket No. 98–182 on November 14, 2002, *is denied.*

11. The Commission's Consumer and Governmental Affairs Bureau, Reference Information Center, *shall send* a copy of this *Memorandum Opinion and Order on Reconsideration,* including the Initial Regulatory Flexibility Certification, to the Chief Counsel for Advocacy of the Small Business Administration.

Federal Communications Commission.

Marlene H. Dortch,

Secretary.

[FR Doc. 2010–18239 Filed 7–23–10; 8:45 am]

BILLING CODE 6712–01–P

Proposed Rules

Federal Register
Vol. 75, No. 142
Monday, July 26, 2010

This section of the FEDERAL REGISTER contains notices to the public of the proposed issuance of rules and regulations. The purpose of these notices is to give interested persons an opportunity to participate in the rule making prior to the adoption of the final rules.

NUCLEAR REGULATORY COMMISSION

10 CFR Parts 30, 40, 70, 170, and 171

RIN 3150–AH15

[NRC–2009–0084]

Distribution of Source Material to Exempt Persons and to General Licensees and Revision of General License and Exemptions

AGENCY: Nuclear Regulatory Commission.

ACTION: Proposed rule.

SUMMARY: The U.S. Nuclear Regulatory Commission (NRC or "the Commission") is proposing to amend its regulations to require that the initial distribution of source material to exempt persons or general licensees be explicitly authorized by a specific license, which would include new reporting requirements. The proposed rule is intended to provide the Commission with more complete and timely information on the types and quantities of source material distributed for use either under exemption or by general licensees. In addition, the NRC is proposing to modify the existing possession and use requirements of the general license for small quantities of source material to better align the requirements with current health and safety standards. Finally, the NRC is proposing to revise, clarify, or delete certain source material exemptions from licensing to make the exemptions more risk informed. This rule would affect manufacturers and distributors of certain products and materials containing source material and certain persons using source material under general license and under exemptions from licensing.

DATES: Submit comments on the rule by November 23, 2010. Submit comments specific to the information collections aspects of this rule by October 25, 2010. Comments received after the above dates will be considered if it is practical to do so, but the NRC is able to assure consideration only for comments received on or before this date.

ADDRESSES: Please include Docket ID NRC–2009–0084 in the subject line of your comments. For instructions on submitting comments and accessing documents related to this action, see Section I, "Submitting Comments and Accessing Information" in the **SUPPLEMENTARY INFORMATION** section of this document. You may submit comments by any one of the following methods.

Federal Rulemaking Web site: Go to *http://www.regulations.gov* and search for documents filed under Docket ID NRC–2009–0084. Address questions about NRC dockets to Carol Gallagher, telephone 301–492–3668, e-mail *Carol.Gallager@nrc.gov.*

Mail comments to: Secretary, U.S. Nuclear Regulatory Commission, Washington, DC 20555–0001, ATTN: Rulemakings and Adjudications Staff.

E-mail comments to: Rulemaking.Comments@nrc.gov. If you do not receive a reply e-mail confirming that we have received your comments, contact us directly at 301–415–1677.

Hand-deliver comments to: 11555 Rockville Pike, Rockville, Maryland 20852, between 7:30 a.m. and 4:15 p.m. Federal workdays (Telephone 301–415–1677).

Fax comments to: Secretary, U.S. Nuclear Regulatory Commission at 301–415–1101.

You may submit comments on the information collections by the methods indicated in the Paperwork Reduction Act Statement.

FOR FURTHER INFORMATION CONTACT: Gary Comfort, Office of Federal and State Materials and Environmental Management Programs, U.S. Nuclear Regulatory Commission, Washington, DC 20555–0001, telephone: 301–415–8106, e-mail: *Gary.Comfort@nrc.gov*, or Catherine Mattsen, Office of Federal and State Materials and Environmental Management Programs, U.S. Nuclear Regulatory Commission, Washington, DC 20555–0001, telephone: 301–415–6264, e-mail: *Catherine.Mattsen@nrc.gov.*

SUPPLEMENTARY INFORMATION:

I. Submitting Comments and Accessing Information
II. Background
A. Introduction
B. Regulatory Framework
C. Why are revisions to 10 CFR Part 40 considered necessary?
III. Discussion
A. *What action is the NRC taking?*
A.1 Specific Licensing of Distribution of Source Material
A.2 Distribution of Products to Persons Exempt From Regulation
A.3 Distribution of Source Material to General Licensees
A.4 Possession and Use of Source Material Under § 40.22
A.5 Revision of Exemption for Thorium Lenses
A.6 Revision of Exemption for Glassware
A.7 Obsolete Exemptions
B. *Whom would this action affect?*
C. *Specific Requests for Comment*
D. *What should I consider as I prepare my comments to the NRC?*
IV. Summary of Proposed Amendments by Section
V. Criminal Penalties
VI. Agreement State Compatibility
VII. Plain Language
VIII. Voluntary Consensus Standards
IX. Finding of No Significant Environmental Impact—Availability
X. Paperwork Reduction Act Statement
XI. Regulatory Analysis
XII. Regulatory Flexibility Certification
XIII. Backfit Analysis

I. Submitting Comments and Accessing Information

Comments submitted in writing or in electronic form will be posted on the NRC Web site and on the Federal rulemaking Web site *http://www.regulations.gov.* Because your comments will not be edited to remove any identifying or contact information, the NRC cautions you against including any information in your submission that you do not want to be publicly disclosed. The NRC requests that any party soliciting or aggregating comments received from other persons for submission to the NRC inform those persons that the NRC will not edit their comments to remove any identifying or contact information, and therefore, they should not include any information in their comments that they do not want publicly disclosed.

You can access publicly available documents related to this document using the following methods:

NRC's Public Document Room (PDR): The public may examine and have copied, for a fee, publicly available documents at the NRC's PDR, Room O–1F21, One White Flint North, 11555 Rockville Pike, Rockville, Maryland.

NRC's Agencywide Documents Access and Management System (ADAMS):

Publicly available documents created or received at the NRC are available electronically at the NRC's Electronic Reading Room at *http://www.nrc.gov/reading-rm/adams.html.* From this page, the public can gain entry into ADAMS, which provides text and image files of NRC's public documents. If you do not have access to ADAMS or if there are problems in accessing the documents located in ADAMS, contact the NRC's PDR reference staff at 1–800–397–4209, or 301–415–4737, or by e-mail to *PDR.Resource@nrc.gov*.

Federal Rulemaking Web Site: Public comments and supporting materials related to this proposed rule can be found at *http://www.regulations.gov* by searching on Docket ID NRC–2009–0084.

II. Background

A. Introduction

Source material is regulated by the NRC under Title 10 of the Code of Federal Regulations (10 CFR) Part 40, "Domestic Licensing of Source Material." Source material includes uranium and thorium in any physical or chemical form. Naturally occurring uranium and thorium and their decay chains emit alpha, beta, and gamma radiation. Uranium exhibits toxic chemical properties that can impair kidney function when ingested or inhaled in large quantities.[1] Thorium dioxide is classified as a "known carcinogen" by the U.S. Agency for Toxic Substances and Disease Registry and has been linked to lung and liver diseases.[2] Because of the potential for uranium and thorium to produce health effects from both chemical toxicity and radiological effects, it is important for the NRC to understand how and in what quantities uranium and thorium are being used under general license and various exemptions in order to better evaluate potential impacts to public health and safety.

The last major modification of 10 CFR Part 40 occurred in 1961 and established licensing procedures, terms, and conditions for source material that were substantially similar to those set forth, at the time, in 10 CFR Part 30, "Licensing of Byproduct Material." Since then, the health and safety requirements in 10 CFR Part 20, "Standards for Protection Against Radiation," have been revised. In particular, radiation dose limits for individual members of the public were significantly reduced in the revision to 10 CFR Part 20. In addition, training and other requirements have been moved and revised from an earlier version of 10 CFR Part 20 into 10 CFR Part 19, "Notices, Instructions and Reports to Workers: Inspection and Investigations." Although the requirements in 10 CFR Part 30 have been revised to address the changes to the health and safety requirements in 10 CFR Part 20 and the training requirements in 10 CFR Part 19, these changed standards have generally not been addressed with respect to the use of source material in 10 CFR Part 40.

Some products currently covered by the exemptions from licensing in 10 CFR Part 40 were in use before the enactment of the original Atomic Energy Act of 1946. Exemptions for the possession and use of many of these products were included in the original 10 CFR Part 40 issued in 1947. As beneficial uses of radioactive material have developed and experience with the use of such material has grown, new products intended for use by the general public have been invented and the regulations have been amended to accommodate the use of new products. The regulations contained in 10 CFR Part 40 currently include no requirements to report how much source material is being distributed in the form of products for use under the exemptions from licensing.

Section 40.22, "Small quantities of source material," provides a general license authorizing commercial and industrial firms; research, educational, and medical institutions; and Federal, State, and local governmental agencies to use and transfer not more than 15 pounds (lb) (6.8 kilograms (kg)) of source material in any form at any one time for research, development, educational, commercial, or operational purposes. Not more than a total of 150 lb (68 kg) of source material may be received in any calendar year. Section 40.22 general licensees are exempt from the provisions of 10 CFR Parts 19, 20, and 21, unless the general licensee also possesses source material under a specific license. The general license prohibits the administration of source material or the radiation emanating from the source material, either externally or internally, to human beings except as may be authorized in a specific license issued by the Commission. There are no reporting requirements for persons transferring source material, initially or otherwise, for use under this general license. Thus, the NRC does not have significant information on whom, how, or in what quantities persons are using source material under this general license.

The current § 40.22 general license (post-1961) is much less restrictive than the previous version (1953–1961), which only permitted receipt of up to 3 lb (1.4 kg) of source material per year by pharmacists and physicians for medicinal purposes and by educational institutions and hospitals for educational and medical purposes only. In the previous version of this general license, resale of source material was prohibited. The current general license not only authorizes larger quantities of source material, but also allows broader types of authorized users and uses of source material. Also, resale is not prohibited.

In the 1990's, the NRC conducted a reevaluation of the exemptions from licensing for byproduct and source material in the NRC's regulations. The assessment of doses associated with most of these exemptions can be found in NUREG–1717, "Systematic Radiological Assessment of Exemptions for Source and Byproduct Materials," published June 2001.[3] Doses were estimated for the normal life cycle of a particular product or material, covering distribution and transport, intended or expected routine use, accident and misuse scenarios, and disposal using dose estimation methods consistent with those reflected in the current 10 CFR Part 20. The report identified potential and likely doses to workers and members of the public under the exemptions contained in 10 CFR Parts 30 and 40. In general, the reevaluation concluded that no major problem exists with the use of products containing source material under the exemptions from licensing. Many of the products containing source material that are used under exemption from licensing present

[1] U.S. Department of Health and Human Services, Agency for Toxic Substances and Disease Registry. "ToxFAQs™" for Uranium," 1999.

[2] U.S. Department of Health and Human Services, Agency for Toxic Substances and Disease Registry. "ToxFAQs™ for Thorium," 1999.

[3] NUREG–1717 is a historical document developed using the models and methodology available in the 1990s. The NUREG provides estimates of radiological impacts from various exemptions from licensing and is based on what was known about distribution of material under the exemptions in the early 1990s. NUREG–1717 was used as the initial basis for evaluating the regulations for exemptions from licensing requirements and determining whether those regulations adequately ensured that the health and safety of the public were protected consistent with NRC policies related to radiation protection. The agency will not use the results presented in NUREG–1717 as a sole basis for any regulatory decisions or future rulemaking without additional analysis. Copies of NUREGs may be purchased from the Superintendent of Documents, U. S. Government Printing Office, P.O. Box 37082, Washington, DC 20013–7082. Copies are also available from the National Technical Information Service, 5285 Port Royal Road, Springfield, VA 22161. A copy is also available for inspection and/or copying for a fee at the NRC Public Document Room, One White Flint North, 11555 Rockville Pike, Room O1–F21, Rockville, MD.

the potential for higher exposures under routine use conditions than the products used under exemption that contain byproduct material because of differences in allowed forms and uses; however, risks from accidents are generally smaller. Although containment is a key to safety for many products containing byproduct material, containment is generally less important for products containing source material because of the low specific activity of the source material contained in such products.

In 1999, the State of Colorado and the Organization of Agreement States submitted a petition for rulemaking, PRM–40–27, which stated their concerns regarding potential exposures to persons using source material under the general license in § 40.22. The petitioners requested that the exemption for these general licensees from 10 CFR Parts 19, 20, and 21 be restricted such that any licensee that has the potential to exceed any dose limits or release limits, or generates a radiation area as defined in 10 CFR Part 20 should be required to meet requirements in both 10 CFR Parts 19 and 20. The petition indicated that the State of Colorado had identified a site operated under the general license in § 40.22 at which there was significant source material contamination. The petitioners calculated that resultant exposures for the source material contamination were significantly above the exposure limits allowed to members of the public in 10 CFR Part 20. The petitioners indicated that public dose limits were considered applicable because workers operating under the general license were exempt from training requirements that would normally be required for radiation workers under 10 CFR Part 19. The petitioners also referenced other situations, which based on their research, appeared to have resulted in § 40.22 (or Agreement State equivalent) general licensees potentially exceeding public health and safety or disposal limits that would apply to most other licensees.

In response to the petition, the NRC sought to develop more information on the use of the general license in § 40.22. Although the NRC had identified 6 persons distributing source material to § 40.22 general licensees in the mid-1980's, the NRC was able to identify only 1 remaining distributor in 2005. In 2006, the NRC contracted Pacific Northwest National Laboratory (PNNL) to examine whether the regulations concerning general licenses and certain exemptions for source material were consistent with current health and safety regulations. In 2007, PNNL completed their evaluation and documented their findings in "PNNL–16148, Rev. 1–Dose Assessment for Current and Projected Uses of Source Material under U.S. NRC General License and Exemption Criteria," (the PNNL study). A copy of the PNNL study can be found in ADAMS by searching for Accession Number ML070750105. The study used available information to identify and assess the primary operations conducted under the § 40.22 general license and equivalent provisions of the Agreement States. The available data was collected from information voluntarily submitted by specific licensees known to have distributed source material to general licensees in the past, through surveys to certain identified general licensees, and through use of searches from the Internet, publications, and professional societies. The available information was found to be limited and may not be representative of all present day, or future, uses of source material under the existing general license.

B. Regulatory Framework

The NRC has the authority to issue both general and specific licenses for the use of source material and to exempt source material from regulatory control under Section 62 of the Atomic Energy Act of 1954, as amended ("the Act" or AEA). A general license is provided by regulation, grants authority to a person for particular activities involving source material as described within the general license, and is effective without the filing of an application or the issuance of a licensing document. Requirements for general licensees appear in the regulations and are designed to be commensurate with the specific circumstances covered by each general license. A specific license is issued to a named person who has filed an application with the Commission. Exemptions are provided in situations where there is minimal risk to public health and safety and allow the end user, who ordinarily requires a license, to possess or use the source material without a license.

The NRC regulations contained in 10 CFR Part 40 set forth the basic requirements for licensing of source material. Section 62 of the AEA authorizes the Commission to determine that certain quantities of source material are "unimportant." Section 40.13, "Unimportant quantities of source material," sets forth several exemptions from the licensing requirements for source material.

The regulations contained in 10 CFR Part 40 authorize a number of different general licenses for source material; one of which is for small quantities of source material (§ 40.22). Because general licenses are effective without the filing of an application with the NRC, there are no prior evaluations of user qualifications, nature of use, or safety controls to be exercised. Some general licenses do include reporting requirements for transfers of source material.

The regulations contained in 10 CFR Part 40 also authorize specific licenses for source material. Basic requirements for submittal of an application for a specific license are found in § 40.31 and general requirements for issuance of a specific license are found in § 40.32. Terms and conditions of licenses are contained in § 40.41. With the exception of requirements found in §§ 40.34 and 40.35, related to the manufacture and initial transfer of products and devices containing depleted uranium to be used under the general license in § 40.25, and the broad transfer authorizations contained in § 40.51, there are no specific requirements applicable to the distribution of products and materials containing source material.

C. Why are revisions to 10 CFR Part 40 considered necessary?

Currently, 10 CFR Part 40 does not include any requirement to report information about source material being distributed for use under the general license in § 40.22 or under any exemption from licensing in § 40.13. Because the NRC does not require the reporting of products and materials distributed for use under the general license or exemptions, the NRC cannot readily determine if the source material is being maintained in accordance with the regulatory requirements for those uses, or how or in what quantities the source material is being used. As a result, the NRC cannot fully assess the resultant risks to public health and safety. Despite the limited availability of information, the NRC has assembled some data regarding the use of source material under both exemptions and the § 40.22 general license. Because of the difficulty of collecting such information and its limited reliability, the NRC has concluded that new reporting requirements on the distribution of source material to § 40.22 general licensees and persons exempt from licensing would significantly increase the NRC's ability to evaluate impacts and more efficiently and effectively protect the public health and safety from the use of source material.

Product Exemptions

NUREG–1717 identified some source material product exemptions as being

obsolete or no longer manufactured at the upper limits allowed under § 40.13(c). As a result, the NRC concludes that it is preferable to delete or reduce the concentration limits allowed in future products to reduce the potential for exposures to the general public from these products.

In addition, based upon numerous questions from industry in the past, the NRC has learned that industry has generally moved from the manufacture of optical lenses containing thorium to the manufacture of lenses with thin coatings of thorium. This has led to the question of the applicability of the product exemption in § 40.13(c)(7) to those lenses coated with thorium. As a result, the NRC is considering expanding the exemption in § 40.13(c)(7) to accommodate current manufacturing practices to make the exemption more useful.

Section 40.22 General License

When the current general license in § 40.22 was established in 1961, provisions were included to exempt the general licensees from 10 CFR Parts 19, 20, and 21. The exemption was based upon the known uses of source material at the time and the health and safety requirements at that time. Because the § 40.22 general license was expanded to include commercial applications in 1961, it is likely that some current practices were not properly evaluated as part of that rulemaking. In addition, since that time, limits for protecting health and safety in 10 CFR Part 20 were significantly lowered and the training requirements in 10 CFR Part 19 were expanded. This combination of events has led to the recognition that some general licensees could expose workers to levels above 1 millisievert (mSv) per year (100 millirem (mrem) per year) which would normally require radiation training under 10 CFR Part 19. In addition, because of the exemption to 10 CFR Part 20, the NRC recognizes that some § 40.22 general licensees may dispose of source material in manners that would not be acceptable for other licensees where 10 CFR Part 20 applies and may abandon sites with contamination at levels exceeding 10 CFR Part 20 release limits. These actions could result in individual members of the public being exposed to dose levels above that permitted by 10 CFR Part 20. The PNNL study indicated that most source material possessed under § 40.22 is likely handled in quantities, physical forms, or in uses and conditions that would justify the continued application of the exemptions to 10 CFR Parts 19, 20, and 21. However, as indicated by PRM–40–27, and by bounding dose calculations in the PNNL study, situations can occur where § 40.22 general licensees exceed limitations under which certain requirements in 10 CFR Parts 19 and 20 would apply to a specific licensee. For example, because of the current exemption to 10 CFR Part 20, a § 40.22 general licensee could abandon a site resulting in a situation where the next occupant is exposed at levels above public dose limits in § 20.1301 and the unrestricted release limits in § 20.1402. As a result, the NRC determined that consideration should be given to making the § 40.22 general license more consistent with current training requirements and public health and safety standards, as set forth in 10 CFR Parts 19 and 20.

In addition, the current § 40.22 general license allows persons to obtain 15 lb (6.8 kg) of uranium or thorium in any form, including any specific isotopes. Certain isotopes of thorium and uranium have specific activities so high that 15 lb of those isotopes could result in doses far in excess of dose limits normally allowed under NRC's regulations without significant controls; thus, although these separated radioisotopes are not commercially available in such quantities, the NRC has concluded that persons should not be allowed to obtain large quantities of these isotopes without applying for a specific license.

III. Discussion

A. What action is the NRC taking?

The NRC is proposing to add new requirements for those persons who initially transfer for sale or distribution products and materials containing source material for receipt under an exemption or the general license in § 40.22. This proposed rule would also make a number of additional revisions to the regulations governing the use of source material under exemptions from licensing and under the general license in § 40.22. These changes are intended to better ensure the protection of public health and safety in an efficient and effective manner.

A.1 Specific Licensing of Distribution of Source Material

The NRC is proposing two new provisions, §§ 40.13(c)(10) and 40.22(e), which would prohibit the initial transfer for sale or distribution of products or materials containing source material to persons exempt from licensing under § 40.13(c) or to a § 40.22 general licensee, respectively, by a person without authorization by a specific license. The initial transfer for sale or distribution is considered to be the first transfer of the product or material containing source material to a person who will be receiving the source material for possession under an exemption listed in § 40.13(c) or under the general license in § 40.22. Subsequent transfers of source material from exempt person to exempt person or from general licensee to general licensee would continue to be allowed without the requirement for a specific license.

Under the proposed § 40.13(c)(10), in conjunction with the proposed § 40.52, a person currently operating under a § 40.22 general license that manufactures and initially transfers or distributes a product for possession under an exemption listed in § 40.13(c) would no longer be allowed to operate under the general license and would instead need a specific license under this proposed rule. The NRC is not aware of any widespread production and distribution of exempt products under the general license; however, with the proposed expansion of the exemption in § 40.13(c)(7) (discussed further in Section A.5 of this document), persons currently manufacturing thorium-coated lenses under the general license would be required to obtain a specific license if the lenses are distributed for use under the expanded exemption.

A specific license for the initial distribution of products for use under an exemption listed in § 40.13(c) would be issued only by the NRC, including for those persons located in an Agreement State, under a new provision § 40.52, "Certain items containing source material; requirements for license to apply or initially transfer." Conditions for the proposed § 40.52 licenses are being proposed in a new provision § 40.53, "Conditions of licenses issued under § 40.52: Quality control, labeling, and records and reports." In 10 CFR 150.15, the Commission retains the authority to license the transfer of possession or control by the manufacturer, processor, or producer of any equipment, device, commodity, or other product containing source material or byproduct material whose subsequent possession, use, transfer, and disposal by all other persons are exempted from licensing and regulatory requirements. The licensing of the export from and import into the United States of byproduct and source material is also wholly reserved to the Commission by this section. Thus, a distributor in an Agreement State involved in the initial transfer of materials or products containing byproduct or source material to exempt persons, whether a manufacturer or an importer, requires authority to distribute

such material from the Commission in addition to any Agreement State license.

In the past, the Commission has chosen not to require licensing of the transfer of source material to exempt persons by manufacturers or importers of products in Agreement States (with the exception of the manufacture of counterweights to be used under § 40.13(c)(5)). This proposed rule, in requiring specific authorization for the initial transfer for sale or distribution of materials or products containing source material to exempt persons, in conjunction with 10 CFR 150.15, would clarify that distributors in Agreement States would need specific licenses, issued by the NRC, authorizing initial transfer of products containing source material for sale or distribution for use under the exemptions in § 40.13(c) or equivalent Agreement State regulations. However, the possession and use of materials or products containing source material by Agreement State licensees would continue to be regulated by the Agreement State.

Importers of finished products containing source material would be exempt from 10 CFR Parts 19 and 20—this is different than the existing regulations governing the initial transfer of byproduct material. The exemption from 10 CFR Parts 19 and 20 for importers of finished products is being proposed because the health and safety concerns for this type of distributor are no different than those for a secondary distributor of source material, who is neither currently, nor in the proposed rule, required to obtain a specific license for distribution. Importers of finished products would not be allowed to process the products and would not be expected to handle the products in any way that would create health and safety impacts beyond what is projected to occur under the exemption.

A specific license for the initial distribution of source material for use under the § 40.22 general license would be issued under a new provision § 40.54, "Requirements for license to initially transfer source material for use under § 40.22." Conditions for the § 40.54 licenses are being proposed in a new section, § 40.55, "Conditions of licenses issued under § 40.54: Quality control, labeling, safety instructions, and records and reports."

The process for obtaining a specific license to distribute source material is expected to be relatively straightforward. Applications for these specific licenses for distribution would be made through the provisions of § 40.31, "Application for specific licenses," and applicants would be required to meet part or all of the provisions of § 40.32, "General requirements for issuance of specific licenses." Regulatory Guide 10.4, "Guide for the Preparation of Applications for Licenses to Process Source Material," which may be used by non-fuel-cycle source material applicants, already addresses the submittal of information on types and quantities of source material planned to be distributed to exempt persons. Under both proposed paragraphs § 40.13(c)(10) and § 40.22(e), an initial distributor would be allowed to continue distribution of products or materials containing source material for 1 year beyond the effective date of this rule. However, if an application for a specific license (or license amendment, in the case of an existing NRC licensee) has been submitted, the applicant would be allowed to continue their distributions while issuance of the license is pending. Persons legally importing products for possession under an exemption for their own personal use or to be given as a personal gift would not be required to obtain a specific license for those products. Similarly, persons importing source material for use under a general license would not be required to obtain a specific license unless they subsequently transfer the source material to another person for use under a general license or exemption.

The regulations contained in 10 CFR Part 40 currently do not require a person to obtain a specific license to distribute source material to persons exempt from licensing or to § 40.22 general licensees (with the exception of counterweights for which this is included as a constraint within the exemption in § 40.13(c)(5)). The regulations in § 40.51 allow such transfers to occur without a distribution license and do not require any reporting of the transfers. This is not true for byproduct material licensees, who are required in 10 CFR Part 32 to obtain a specific license for the initial distribution of byproduct material to persons exempt from licensing or for use under a general license. The import of exempt materials or products is generally licensed by 10 CFR 110.27(a)(2) and 10 CFR 110.27(a)(3) provides a general license for the import to those persons authorized to receive products or materials under a license. However, in the case of source material distribution to exempt persons or to § 40.22 general licensees, no other license is currently required, nor are there any requirements to report the transfer or receipt of the imported material.

Because of the lack of reporting requirements associated with the possession of source material under exemption or the § 40.22 general license, the NRC does not have a clear understanding of the amounts, types, or uses of source material under exemption or under the § 40.22 general license. Most information gathered by the NRC to date comes from a few specific licensees who have voluntarily provided distribution data. Because this information may not fully represent actual usage, it is difficult for the Commission to make risk-informed decisions in updating the related source material regulations. Without the proposed specific licenses for initial distributors, it would be difficult or impossible to enforce reporting requirements on unidentified distributors. Requiring initial distributors of source material to exempt persons or to certain general licensees to obtain a license for distribution would allow the NRC to track the amount and types of source material being distributed to those persons through proposed reporting requirements that would be associated with the new specific licenses.

A.2 Distribution of Products to Persons Exempt From Regulation

A prohibition on distribution without a specific license is proposed in a new § 40.13(c)(10), which directs persons seeking to distribute source material to exempt persons, to the proposed new § 40.52. The proposed § 40.52 provides conditions for approval of a license application for initial distribution of source material to exempt persons. Additionally, the proposed § 40.53 contains a number of conditions for initial distributors including requirements for reporting and recordkeeping, quality control, and labeling.

The new reporting and recordkeeping requirements are proposed in § 40.53(c). An initial distributor of products for use under the exemption in § 40.13(c) would be required to submit a report, by January 31 of each year, regarding transfers made in the previous calendar year. The report would identify the distributor and indicate what products, types of source material and amounts, and number of units distributed.

The regulations contained in 10 CFR Part 40 were initially based on the assumption that the health and safety impacts of source material were low and that considerations of protecting the common defense and security were more significant. When the AEA was initially written, one of the major focuses was to ensure that the United States government would have an adequate supply of uranium and thorium as "source material" for atomic

weapons and the nuclear fuel cycle. Exemptions from licensing were made for certain consumer products already in production, such as gas mantles containing thorium, and these exemptions have not been substantially modified since they were included in the original issuance of 10 CFR Part 40 in 1947. These exemptions essentially accommodated existing practice without much emphasis on health and safety. Recent studies have indicated that the manufacture and use of such products has decreased as alternative products, not containing source material, have become more readily available. Consistent with a policy statement on consumer products published on March 16, 1965 (30 FR 3462), the Commission has periodically made various evaluations of potential doses from exempt products to ensure that exposures from any individual exempt practice do not exceed a small fraction of the overall recommended dose limit for the public and that the combined effect of exposures from various exempt practices does not result in a significant impact to public health and safety. However, because the Commission has little data on distributions of source material to exempt persons, these evaluations for source material have been particularly difficult to conduct, and may not necessarily represent real world conditions.

The data collected by virtue of the proposed rule would provide the NRC with a more accurate and complete representation of material distributed to the public for use under exemptions in § 40.13(c). This would allow the NRC to recognize trends in distribution which could alter earlier estimates of individual or collective doses and affect earlier findings regarding health and safety. These changes would provide a better basis for considering any future regulatory changes in this area and in allocating the NRC's resources. The proposed reporting requirements would also aid in ensuring that exposures to the public from all sources controlled by the NRC are monitored and are unlikely to exceed 1 mSv (100 mrem) per year.

These proposed reporting and recordkeeping requirements are expected to impose a minimal burden on those persons requiring a specific license for initial distribution of source material, particularly given the current state of information technology. The first report may include information on transfers for which records have not been required; however, this information is expected to be available because of basic business recordkeeping practices. If exact numbers cannot be given for this first report, a best estimate for the whole calendar year would be acceptable.

In addition to reporting and recordkeeping, there are a few additional requirements being proposed for initial distribution of products for use under exemption. The new requirements would help to ensure that products being distributed were within the quantity or concentration limits for those exemptions that include such limits and that the products were properly labeled as currently required by the existing conditions in the exemptions.

In the NUREG–1717 assessment, it was identified that certain products containing source material and used under exemptions from licensing (*e.g.,* welding rods and gas mantles) have the potential for routine exposures that are higher than is generally acceptable for use under exemption. However, the use of thorium in these products has significantly declined, being replaced by rare earth compounds, such as lanthanum and yttrium. As a result, routine use of thorium containing products of these types by individuals to the exclusion of similar products containing rare earths is less likely and typical exposures to users is likely less than previously estimated. At the same time, the likely exposures can be limited by the user who is properly informed concerning the inherent risks of exposures and methods for reducing exposure. Thus, rather than eliminate these exemptions, the Commission is proposing to include in the proposed distributor requirements the requirement to provide safe handling instructions. Some distributors have done so voluntarily in the past. Welding has other inherent risks, thus, welding rod manufacturers and importers are required by Occupational Safety and Health Administration regulations to prepare and distribute Material Safety Data Sheets (MSDSs) on the use of welding rods. While these identify the presence of thorium for thorium-containing welding rods, they typically do not include information specifically about the radiological hazard.

New fee categories and initial fee amounts for this new specific license type are being proposed as revisions to 10 CFR Parts 170 and 171. There would be a category for the distribution aspect and a separate one for manufacturing or processing. The applicants and licensees under the proposed licensing provision § 40.52 would come under a newly established fee category, 2.C. "Licenses to distribute items containing source material to persons exempt from the licensing requirements of 10 CFR Part 40 of this chapter" (the current 2.C. "All other source material licenses" is proposed to be redesignated as 2.F. by this rule). This new fee category would apply to all initial distributors of products containing source material for use under § 40.13(c). The fee associated with this category would be the only fee required by the NRC of distributors whose possession and use of source material is licensed by an Agreement State or who only import finished products for distribution. There would be an additional fee category for those manufacturing or processing such products. This is similar to the breakdown of fees for manufacturers and distributors of exempt byproduct material. The initial fee associated with the distribution aspect of licensing for source material would be lower than those related to distribution of products containing byproduct material to exempt persons, because this rule would add more limited requirements applicable to the distribution aspect of licensing for source material. Proposed initial fee amounts for the proposed new category 2.C. are as follows: $7,000 for an application; $10,000 for the annual fee.

The new fee category for manufacturing and processing would be 2.E, "Licenses for possession and use of source material for processing or manufacturing of products or materials containing source material for commercial distribution." It is proposed that the initial fees associated with manufacturing or processing be the same amount as those that currently apply to a manufacturer of a product containing source material that now comes under the current fee category 2.C, "All other source material licenses." These fees are currently $10,100 for an application and $17,400 for the annual fee, but will change to $10,200 and $21,100, respectively, on August 16, 2010, as a result of the 2010 Fee Rule published on June 16, 2010 (75 FR 34220). It is proposed that the initial fee amounts applicable to the proposed new fee category 2.E. be the same as those for the current category 2.C. at the time this proposed rule is finalized and the requirements are made effective. These amounts are subject to change prior to the finalization of this proposed rule.

After the implementation of this proposed rule, the fee amounts for these new categories would change annually in accordance with NRC policy and procedures. Biennially, the NRC evaluates historical professional staff hours used to process a new license application for materials users fee categories which often results in changes to the flat application fees. In addition, results from the biennial

review impacts the annual fee for the small materials users since the NRC bases the annual fees for each fee category within this class on the application fees and estimated inspection costs for each fee category. Each year the annual fee for the materials users is calculated using a formula which distributes the NRC allocated budget amount for the small materials users to the various fee categories based on application fees, inspections costs, inspection frequency, and the number of licensees in the fee category.

A.3 Distribution of Source Material to General Licensees

The prohibition on distribution without a specific license in the proposed § 40.22(e) directs persons seeking to distribute source material to § 40.22 general licensees to the proposed new § 40.54. The proposed § 40.54 provides conditions for approval of a license application for initial distribution of source material to § 40.22 general licensees. Additionally, the proposed § 40.55 contains a number of conditions for initial distributors including requirements for reporting and recordkeeping, labeling, and notifications.

The proposed rule would add § 40.55(d) and (e) to establish reporting and recordkeeping requirements for initial distributors of source material to persons generally licensed under § 40.22 or equivalent Agreement State provisions. The rule would require that transfers be reported to the NRC and, if applicable, to the Agreement State where the material is transferred, annually by January 31. The report would cover transfers of source material completed in the previous calendar year. The reports would identify each general licensee receiving quantities of source material greater than 50 grams (g) (0.11 lb) within any calendar quarter by name and address, the responsible agent who may constitute a point of contact between the NRC or the Agreement State agency and the general licensee, and the type, physical form, and quantity of source material transferred. In addition, the distributor would be required to report the total quantity of source material distributed each calendar year, including those transfers of less than 50 g (0.11 lb) in a quarter to any person.

When the small quantity general license was originally granted, it was intended to be used by pharmacists and physicians for medicinal purposes and by educational institutions and hospitals for educational and medical purposes (although the general license was later revised in 1980 to prohibit use for medicinal and medical purposes). When the general license was expanded in 1961, both in terms of how much material and what it could be used for, no consideration was made to include reporting requirements at the time. As a result, the NRC has not been able to readily identify persons using source material under this general license nor verify its proper use.

The proposed reporting requirements, when also applied to distributors in Agreement States by those States, would help the NRC identify § 40.22 general licensees using larger quantities of source material. This would enable the NRC to better communicate with or inspect these general licensees, if necessary, to ensure that public and worker health and safety is adequately protected. The Commission would also use collected data to assess the extent of use of this general license in order to better evaluate alternatives for future revisions to this general license. Because the proposed reporting requirement is intended to apply only to anyone initially distributing source material to § 40.22 general licensees, transfers of source material from general licensee to general licensee would still not be reported.

Records of the initial transfer of source material for use under § 40.22 would be required to be stored for 1 year after inclusion in a report to the Commission or to an Agreement State agency. Maintaining records for this length of time will facilitate the licensee's preparation of the report and allows for verification of the accuracy of the report by the NRC or the Agreement State. This is shorter than the recordkeeping requirements for transfers of generally licensed devices in byproduct material regulations. For generally licensed devices, longer recordkeeping is appropriate because of the possible need for tracing particular devices if generic defects were identified.

These proposed reporting and recordkeeping requirements are expected to impose a minimal burden on those persons requiring a specific license for initial distribution of source material, particularly given the current state of information technology. The first report may include information on transfers for which records have not been required; however, this information is expected to be available because of basic business recordkeeping practices. If exact numbers cannot be given for this first report, a best estimate for the whole calendar year would be acceptable.

In addition to reporting and recordkeeping, there are a few additional requirements being proposed for distribution of material for use under § 40.22 and equivalent Agreement State provisions. The new requirements would primarily require the licensee to ensure the quantity or concentration of material is as labeled. The initial distributors would be required to provide to their customers copies of key relevant regulations and radiation safety precautions and instructions. Requiring initial distributors to provide copies of such regulations would make the recipient aware that the source material is possessed under a general license and what the requirements are under that general license.

New fee categories and fee amounts for this new specific license type are being proposed as revisions to 10 CFR Parts 170 and 171. The applicants and licensees under the proposed licensing provision § 40.54 would come under a newly established fee category, 2.D. "Licenses to distribute source material to persons generally licensed under 10 CFR Part 40 of this chapter." Proposed initial fee amounts are as follows: $2,000 for an application; $5,000 for the annual fee. These applicants and licensees would also be subject to the proposed new category, 2.E., "Licenses for possession and use of source material for processing or manufacturing of products or materials containing source material for commercial distribution." As discussed in section A.2 of this document, the initial fee amounts for this category would be equal to the fee for current fee category 2.C at the time this proposed rule is finalized and the requirements are made effective. These fee amounts would subsequently be revised in accordance with applicable NRC policy and procedures.

The Commission currently has no licensees under the existing licensing provision of § 40.34, which also authorizes distribution to a category of general licensees (those licensed under § 40.25 and Agreement State equivalent provisions). The proposed new fee categories 2.D. for persons who initially distribute source material to general licensees and 2.E. for manufacturing or processing of source material for commercial distribution would also cover future NRC applicants and licensees that apply for or possess a license under § 40.34.

A.4. Possession and Use of Source Material under § 40.22

The NRC is proposing to revise § 40.22, "Small quantities of source material," in its entirety.

Under the proposed § 40.22(a), the general license would be limited to thorium and uranium in their natural isotopic concentrations and depleted uranium. This differs from the existing § 40.22(a) which allows possession of any isotopic concentration of source material. Certain radionuclides of uranium and thorium, when isotopically separated, have the potential to present significantly higher doses, in particular, thorium-228, thorium-229, and uranium-232. Thorium-230 when separated from the uranium decay series is also a higher specific activity material. Although the NRC is not aware of these isotopes being separated for commercial use, if the separated isotopes were readily available, the current provisions of § 40.22 would allow a person to receive quantities large enough in terms of activity to present a security concern without obtaining a specific license. The proposed revised general license would limit uranium and thorium to their natural isotopic concentrations or as depleted uranium to ensure that persons could not obtain these much higher specific activity materials in an isotopically separated form without the authorization and safety controls provided by a specific license.

Under the proposed § 40.22(a)(1), the general licensee would be limited to possession of less than 1.5 kg (3.3 lb) of uranium and thorium at any one time and 7 kg (15.4 lb) per calendar year for all uranium and thorium that is in a dispersible form or has been processed by the general licensee. Under the current general license, assurance of safety is based primarily on two limiting conditions: (1) The amount of source material that may be used at any one time and (2) the amount that may be obtained in any calendar year. It had been assumed that the activities likely to be conducted under the general license would be unlikely to result in significant intakes of source material. These conditions, however, may not be totally effective in affording a proper level of safety as raised by PRM–40–27 and substantiated by the PNNL study. PRM–40–27 and the PNNL study indicate that situations can occur that exceed limitations under which certain requirements in 10 CFR Parts 19 and 20 usually would apply to specific licensees. These situations primarily result from the use of source material used or possessed in a dispersible form.

In PRM–40–27, the petitioners stated that they had identified a site, where source material was likely possessed under the general license in § 40.22, that had significant amounts of surface contamination from source material. The petitioners indicated that resultant exposures for the source material contamination were significantly above the dose limits (possibly as high as 1 rem (10 mSv) per year) allowed to members of the public in 10 CFR Part 20.

The PNNL study confirmed that such exposures were possible under the existing § 40.22 general license conditions and indicated that unprotected workers exposed to thorium and uranium powders during the lens manufacturing process, as licensed under a § 40.22 general license, can potentially receive an annual internal radiation dose up to 5.6 mSv (560 mrem), and an annual committed effective dose approaching 8 mSv (800 mrem) without regard to excess contamination. This type of manufacturing process uses source material in a powdered form which allows for a greater chance of inhalation or ingestion of the source material. Although the Commission expects that these doses from manufacturing may be tremendously reduced if the process is performed in hot cells or if workers generally use respiratory protection (*e.g.,* dust masks) in response to other regulatory requirements, the NRC is concerned about the potential exposures because a § 40.22 licensee is not required to meet the health and safety requirements for protection against radiation in 10 CFR Part 20 nor the training requirements in 10 CFR Part 19.

The proposed new limits in § 40.22(a)(1) are intended to reduce the likelihood that a person operating under a general license would be able to exceed dose limitations in 10 CFR Parts 19 and 20, which would require additional controls if the person were specifically licensed. Based upon the bounding dose calculations in the PNNL study, the NRC expects this proposed lower quantity to limit the potential for a worker to be exposed at levels exceeding 1 mSv (100 mrem) per year. In addition, by limiting the amount of such source material allowed to be received in a calendar year, the NRC expects that the potential for surface contamination buildup (similar to that identified in PRM–40–27) would also be reduced. By reducing the amount of source material that is available for inhalation and ingestion, the NRC has concluded the exemptions to 10 CFR Parts 19, 20, and 21 would continue to be acceptable.

It is expected that a small number of persons currently possessing and using source material under the existing general license may be required to obtain a specific license for continued use of the source material under this proposed rulemaking. Persons currently possessing source material in dispersible forms, or processing source material, in quantities greater than 1.5 kg (3.3 lb) of uranium and thorium at any one time, or receiving more than 7 kg (15.4 lb) of uranium and thorium in 1 year, would be required to obtain a specific license if they could not reduce their possession and use of the source material to below the proposed new limits.

Under the proposed § 40.22(a)(2), the general licensee would be allowed to possess up to 7 kg (15.4 lb) total uranium and thorium at any one time as long as any source material possessed in addition to that possessed under the limits in § 40.22(a)(1) is in a solid, non-dispersible form (*e.g.,* a metal or sintered object; contained in protective envelope or in a foil; or plated on an inactive surface) and not chemically or physically altered. The licensee is limited to the receipt of no more than 70 kg (154 lb) of uranium and thorium per calendar year. If the licensee does physically or chemically alter the solid source material, that altered source material would be required to fall within the 1.5 kg (3.3 lb) at one time limit and no more than 7 kg (15.4 lb) per calendar year limits of the proposed § 40.22(a)(1). Because the greater impact from the possession and use of source material results from inhalation or ingestion, allowing source material, in a solid, non-dispersible form, to continue to be possessed at a limit of 7 kg (15.4 lb) at any one time is not expected to significantly impact health and safety of workers handling or near such material because of the unlikely chance of inhalation or ingestion.

Under the proposed § 40.22(a)(3), persons treating drinking water by removing uranium for the primary purpose of meeting U.S. Environmental Protection Agency regulations, would continue to be allowed to possess up to 7 kg (15.4 lb) of uranium at one time and process no more than 70 kg (154 lb) of uranium per calendar year. The NRC has concluded that the types of activities used to remove uranium from drinking water adequately contain the uranium to protect worker health and safety. The NRC also is concerned that the implementation of reduced possession limits on such persons could significantly impact operating costs, if such facilities are required to obtain specific licenses, and thereby impact their ability to provide safe drinking water. Although persons operating such facilities would not be impacted by changes in possession limits, they would be required to meet the other requirements of the proposed rule.

However, these persons continue to have multiple options for operating within the NRC's regulations, including operation under a specific license or applying for enforcement discretion as discussed in the 2006 Regulatory Information Summary (RIS–2006–020), "Guidance for Receiving Enforcement Discretion When Concentrating Uranium at Community Water Systems," dated September 14, 2006.

The proposed § 40.22(b) primarily provides clarification of how existing regulations apply to § 40.22 general licensees. Paragraph 40.22(b)(1) restates an existing requirement prohibiting the administration of source material to humans, unless authorized by a specific license.

Under the proposed § 40.22(b)(2), the NRC is clarifying disposal requirements for source material possessed under § 40.22. Because § 40.22 currently exempts the general licensee from the requirements in 10 CFR Part 20, one can infer that disposal of source material may be exempt from regulation because 10 CFR Part 20 includes disposal requirements. However, there is no exemption from § 40.51 which includes transfer provisions for licensees (including general licensees) which, depending upon how the general licensee disposes of the material, may be applicable and therefore limit disposal opportunities. The NRC is proposing in § 40.22(b)(2) to specifically prohibit abandonment of source material but allow up to 0.5 kg (1.1 lb) of source material per calendar year to be permanently disposed of without further NRC restrictions as long as the source material is in a solid, non-dispersible form (*e.g.,* a metal brick, encapsulated in cement, etc.). The person receiving the source material to be permanently disposed would still be required to meet the applicable regulations of other agencies regarding such disposals. The NRC concludes that such small quantities would allow small general licensees (*e.g.,* educational institutions) to economically dispose of the source material and would result in minimal impact to public health and safety because its form would limit ingestion and inhalation of the source material. The person receiving source material transferred under the provisions of § 40.22(b)(2)(i) would not be subject to further regulation by the NRC to the extent that the source material received under this provision was promptly and permanently disposed of by the recipient. Larger quantities of source material would be required to be disposed of as radioactive material through the provisions of § 20.2001 (*e.g.,* at an appropriately licensed disposal facility, or below the effluent release concentrations in 10 CFR Part 20, etc.) or transferred to another person otherwise authorized to receive the source material.

Because § 40.22 does not currently exempt the general licensee from other requirements in 10 CFR Part 40, the NRC is proposing in § 40.22(b)(3) to direct the general licensee's attention to other applicable sections of 10 CFR Part 40. Similarly, § 40.22(b)(5) directs the general licensee's attention to regulations regarding export of source material.

As part of its attempt to evaluate the current use of source material under the general license, the NRC found it difficult to obtain significant information voluntarily from general licensees. The proposed new condition in § 40.22(b)(4) would clearly obligate general licensees to respond to the NRC's written requests within 30 days.

As identified in PRM–40–27, contamination may become problematic for some persons using source material under the general license. The NRC is concerned that not only might a licensee not attribute what could be significant amounts of source material contamination to its possession limits but also, such as in the case identified in PRM–40–27, might abandon significant amounts of source material in place. This abandonment could result in other persons that later inhabit the facility from unknowingly exposing their workers or others to the source material contamination. As a result, in proposed § 40.22(c), the NRC is proposing to require the general licensee to minimize contamination at the site and ensure that the site is cleaned up to be protective of future worker and public health and safety. If the general licensee identifies evidence that there may be significant contamination, the license would be required to notify the NRC and may consult with the NRC as to the appropriateness of sampling and restoration activities. The goal of this requirement is to reduce the likelihood that any remaining contamination would have the potential to result in the 25 mrem (0.25 mSv) limits in § 20.1402 being exceeded. The NRC would expect a licensee to identify a concern about significant contamination based on both visual inspection (*i.e.,* particulates remaining from operations) and operational and historical data (*e.g.,* operations often resulted in airborne or dispersed particulates or there were history of spills, etc.). If there is any doubt as to whether remaining contamination may be considered significant, the licensee should consult with the NRC or a health physics consultant.

In the proposed § 40.22(d), the NRC is proposing to continue to exempt persons generally licensed under § 40.22 from 10 CFR Parts 19, 20, and 21, with the exceptions concerning disposal and decommissioning in proposed § 40.22(b)(2) and (c). In addition, the NRC is proposing that this exemption would not extend to any NRC specific licensee; in the current regulation only 10 CFR Part 40 licensees are excluded. This modification is expected to provide minimal impact to those other specific licensees who possess source material under the general license, because they would already be subject to 10 CFR Parts 19, 20, and 21 for other licensed materials.

A.5 Revision of Exemption for Thorium Lenses

Paragraph 40.13(c)(7) exempts thorium contained in finished optical lenses, provided that each lens does not contain more than 30 percent by weight of thorium and meets certain use limitations, including that the thorium not be contained in contact lenses, spectacles, or eyepieces in binoculars or other optical instruments. Thorium is used in or on lenses to modify optical properties of the lens. The exemption, when originally established, was intended for uses where the thorium was homogonously spread throughout the lens. However, more recently, manufacturers are more likely to apply a thin coating of thorium to the lens; this has brought up concerns of the applicability of the existing exemption for such coated lenses. Also, NRC has identified that source material may also be used as a coating on mirrors.

To clarify the regulatory status of these coated lenses and to address coatings on mirrors, the rule proposes three changes to the existing exemption: (1) Expand the exemption to include source material in or on finished coated lenses and mirrors; (2) reduce the source material limit from 30 percent by weight to 10 percent by weight for products distributed in the future; and (3) expand the exemption to include uranium. The remaining limitations on use would continue to apply.

Although historical information indicates that lenses containing up to 28 percent by weight of thorium oxide were manufactured in the past, most lenses that have been possessed under this exemption have contained concentrations closer to 10 percent by weight of thorium. The NRC has not been able to identify any manufacturers or distributors of lenses containing homogeneous amounts of thorium since

1980, because the industry appears to have moved to using thorium as a thin-film coating on the surface of lenses. The NRC's evaluation found that thin-film coated lenses contain a significantly lower total mass of thorium than that generally found in the same size homogeneous lenses. In addition, the NRC has learned that certain lens manufacturers also use thorium in combination with uranium to achieve desired properties. Although a coated lens does not contain the source material homogeneously within the lens (as is the case with lenses that may currently be possessed under the exemption), the PNNL study indicated that doses from both normal and accident conditions from lenses coated with either or both uranium and thorium were estimated to be well below 10 microsievert (μSv) per year (1 mrem per year). As a result, the NRC is proposing to expand the exemption to include these thin-film coatings and to also apply the exemption to lenses and mirrors containing uranium. The NRC's expectation is that the source material would be fixed onto the lens or mirror and not readily able to be removed from the surface. The exemption prohibits and would continue to prohibit shaping, grinding, polishing, and any other manufacturing process other than assembling the finished lens into an optical system or device.

The NRC is also proposing to revise § 40.13(c)(7) to limit the source material contained on or in the lens to no more than 10 percent by weight of source material across the volume of the lens, although lenses containing up to 30 percent by weight of thorium that were produced prior to the effective date of this rule would continue to be covered by this exemption from licensing. Based on information that the manufacture of lenses containing homogeneous thorium is no longer occurring and that the majority of lenses currently being manufactured, contain concentrations less than 10 percent by weight of thorium, this reduction in the limit is expected to have minimal impact on industry. The actual percent by weight of source material on a thin-coated lens is expected to be well below this limit as averaged over the entire lens.

A.6 Revision of Exemption for Glassware

Paragraph 40.13(c)(2)(iii) exempts glassware containing up to 10 percent source material by weight. Although the estimated doses associated with this exemption are acceptable, the benefit from this use of source material is limited to achieving a unique color and glow in the glassware. Such glassware has been used in products such as dinnerware and toys. This use of source material might be considered frivolous, which is not in keeping with the policy of the Commission with regard to consumer products. However, this use predates the AEA, has been ongoing for decades, and continues today. Current manufacturing is relatively limited and the concentration in any recently produced items appears to be less than 2 percent source material (uranium). The one NRC-licensed manufacturer maintains concentration in products to within 1 percent by weight uranium. This rule proposes to limit products manufactured in the future to no more than 2 percent by weight source material. This would have minimal impact on the industry, limited to any costs associated with ensuring and documenting that products do not exceed this limit. It would ensure that doses to members of the public exposed to products distributed for use under this exemption in the future would be unlikely to exceed 10 μSv (1 mrem) per year. This is more appropriate for products with minimal societal benefit and is consistent with the concept of ALARA (as low as reasonably achievable).

A.7. Obsolete Exemptions

Some exemptions from licensing are considered obsolete in that no products are being distributed for use under the exemption. In at least one case, no products covered by the exemption remain in use. Generally, this has occurred because new technologies have made the use of radioactive material unnecessary or less cost-effective.

The NRC is proposing to delete exemptions for products that are no longer being used or manufactured, or to restrict further distribution while allowing for the continued possession and use of previously distributed items. NUREG–1717 describes the various products covered by the individual exemptions. Two of the conclusions in that report concerning distribution are:

- For § 40.13(d): It is believed that fire detection units containing source material have not been manufactured for commercial use; and
- For § 40.13(c)(2)(i): The exemption for ceramic tableware containing source material could result in significant doses, which might be of concern, if used as one's everyday dinnerware.

The exemption in § 40.13(d) would be removed; however, in the unlikely event that persons possess products covered by this provision, this action would not change the regulatory status of any products previously manufactured in conformance with the provisions of the regulations applicable at the time. In the case of ceramic tableware, the proposed rule would limit the exemption to previously manufactured products. This action would provide assurance that health and safety are adequately protected from possible future distribution. Preliminary estimates indicated a potential for exposures higher than is appropriate for materials being used under an exemption. However, these were estimated using particularly conservative assumptions for routine use, rather than the more typical use as a collectable.

Deleting the provision in § 40.13(d) would simplify the regulations by eliminating extraneous text. Also, the Commission periodically reevaluates the exposure of the general public from all products and materials distributed for use under exemption, to ensure that the total contribution of these products to the exposure of the public will not exceed small fractions of the allowable limits. Eliminating obsolete exemptions would add to the assurance that future use of products in these categories would not contribute to exposures of the public and would also eliminate the need to reassess the potential exposure of the public from possible future distributions of these products.

There are other products covered by the exemptions in § 40.13(c) for which distribution is very limited and may have ceased, however, without the types of distributor requirements now being proposed, it is difficult to be certain concerning whether any distribution continues.

This risk-based approach to exemptions is in line with the strategic plan of the NRC.

B. Whom would this action affect?

This proposed rule would affect manufacturers and distributors of certain products and materials containing source material, and persons using source material under the general license in § 40.22. Certain persons initially transferring source material to exempt persons or general licensees would be required to obtain a specific license for such distribution. Certain persons currently possessing a general license under § 40.22 may be required to obtain a specific license for the continued possession and use of source material if they cannot adapt their operations to the newly proposed possession limits or if they initially transfer products containing source material. The proposed rule would exempt persons who possess thorium or uranium coated lenses or mirrors from licensing requirements for those lenses

and mirrors through a proposed revision to § 40.13(c)(7).

C. Specific Requests for Comment

The NRC has identified specific questions related to this proposed rulemaking as well as some questions for consideration in potential future rulemakings.

The NRC seeks comments, in particular, on the following specific questions presented in the proposed rulemaking:

(1) In the proposed expansion to § 40.13(c)(7), the exemption is limited by a concentration limit. It is expected that coatings on lenses are always very thin in practice such that it is unlikely that coated lenses would be near the concentration limit. However, a concentration limit may not be the most appropriate control, as it is generally not appropriate for surface contamination or hot spots to be averaged with other material for comparison to a concentration limit. Should other controls (*e.g.,* mass or activity limit) be used and if so, what limits should be considered?

(2) On the proposed revision to the general license for small quantities of source material in § 40.22, is the limitation to natural or depleted uranium and natural thorium the most appropriate way to prevent persons from obtaining source material radionuclides with high specific activities without applying for a specific license? Does this adequately protect public health and safety from, for example, thorium-230 extracted from ore high in uranium content? Should an activity limit(s) be added to the weight limit? If so, what activity limit would adequately protect health and safety without adding significant implementation burden for ensuring the activity limit(s) are not exceeded?

(3) In § 40.22(c), the NRC proposes to require persons to contact the NRC if they identify significant contamination but does not specifically identify what is considered to be significant contamination. Is this a reasonable approach or are there other approaches the NRC should consider? Should the NRC prescribe what is considered significant contamination, and if so, what should be defined as significant contamination? Should the NRC instead specifically require general licensees to complete surveys in accordance with the provisions of § 20.1501 to ensure that the limits in § 20.1402 are not exceeded, in particular for those licensees possessing source material under the proposed § 40.22(a)(1)? Would a requirement for such surveys result in unnecessary expenses, particularly for general licensees possessing very small quantities, or should such a requirement be limited and if so, how?

(4) In assessing proposed changes to § 40.22, has the NRC properly identified and assessed the range of activities undertaken under the existing general license? Has the NRC overestimated or underestimated the potential for impacts from such operations and if so, how (*e.g.,* is there exposure data available that the NRC did not have available during development of the proposed rule, but should be considering)? Similarly, are the assumptions discussed in the proposed revisions to exemptions in § 40.13 correct (*i.e.,* are some products still being manufactured at concentration levels above the proposed concentration limits)?

(5) In § 170.31, the NRC is proposing to add new categories 2.C., 2.D., and 2.E. and associated fees for applications for those categories. Similarly, in § 171.16, the NRC is proposing to add new categories 2.C., 2.D., and 2.E and associated annual fees to the table in paragraph (d). In both situations, the proposed new fees are based upon similar existing activities, although in future years these fees would be based upon actual NRC effort on these activities as data is accumulated. Are these new fee categories appropriate and are the initial fees reasonable?

(6) In § 40.22(b)(2)(ii), quantities of source material greater than 0.5 kg (1 lb) per year would be required to be disposed of as radioactive material through the provisions of § 20.2001 or transferred to another person otherwise authorized to receive the source material. Should the NRC consider other disposal alternatives for these larger quantities, such as in U.S. Environmental Protection Agency's Resource Conservation and Recovery Act (RCRA) Subtitle C hazardous waste disposal facilities or RCRA Subtitle D municipal Solid waste landfills?

The NRC would also welcome preliminary input on the following issues for potential future rulemaking:

(1) Should the general license in § 40.22 be expanded to cover 11(e)2 byproduct material, *i.e.,* mill tailings and wastes, to allow for small quantities, such as samples, to be more readily transferred for testing, for example? Given that the entire material is 11(e)2 byproduct material, and not just the uranium or thorium contained in the material, would higher weight limits be appropriate? If allowed, should any other conditions be changed (*e.g.,* waste disposal, etc.) or added?

(2) Should explicit provisions be added to 10 CFR Part 40 and 10 CFR Part 70 to cover the inclusion of source material and special nuclear material in items in the sealed source and device registry, similar to 10 CFR 32.210?

(3) There has been little use of the provisions in §§ 40.25 and 40.34 for the use of depleted uranium under a general license. How could these provisions be revised to expand the likely use of these provisions and make the general license more useful to the regulatory program? Is the subjective nature of the findings in § 40.34(a)(3) and (b) concerning the usefulness of a product or device and the benefits from the use of the depleted uranium a deterrent to applicants/potential distributors? Also, should the exposure limits in § 40.34(a)(2) be reduced to 1 mSv (100 mrem) per year?

(4) Are there product exemptions in § 40.13(c) that should be considered obsolete and revised to allow only those products that were previously distributed? Are there other changes to the exemptions in § 40.13(c) that should be considered?

D. What should I consider as I prepare my comments to the NRC?

Recommendations for preparing your comments:

i. Identify the rulemaking: RIN 3150–AH15; docket ID NRC–2009–0084.

ii. Explain why you agree or disagree; suggest alternatives and substitute language for your requested changes.

iii. Describe any assumptions and provide any technical information and/or data that you used.

iv. If you estimate potential costs or burdens, explain how you arrived at your estimate in sufficient detail to allow for it to be reproduced.

v. Provide specific examples to illustrate your concerns, and suggest alternatives.

vi. Explain your views as clearly as possible.

vii. Make sure to submit your comments by the comment period deadline identified.

viii. Section VI of this document contains a request for comment on the compatibility designations for the proposed rule; Section VII contains a request for comments on the use of plain language; Section IX contains a request for comments on the environmental assessment; Section X contains a request for comments on the information collection requirements; Section XI contains a request for comments on the draft regulatory analysis; and Section XII contains a request for comments on the impact of the proposed rule on small businesses.

IV. Summary of Proposed Amendments by Section

Section 30.6 Communications

10 CFR 30.6(b)(1)(iv)—Would add a reference to new § 40.52 as a licensing category not delegated to the NRC Regions.

Section 40.5 Communications

10 CFR 40.5(b)(1)(iv)—Would add a reference to new § 40.52 as a licensing category not delegated to the NRC Regions.

Section 40.8 Information Collection Requirements: OMB Approval

10 CFR 40.8(b)—Would add sections to the list of information collection requirements.

Section 40.13 Unimportant Quantities of Source Material

10 CFR 40.13(c)—Would clarify that persons exempt from licensing requirements are also exempt from 10 CFR Parts 19, 20, and 21.

10 CFR 40.13(c)(2)(i)—Would restrict the exemption for use of source material in certain ceramic tableware to that previously manufactured.

10 CFR 40.13(c)(2)(iii)—Would revise the exemption for use of source material in glassware to reduce the limit of 10 percent by weight source material to 2 percent by weight source material for glassware manufactured in the future.

10 CFR 40.13(c)(5)—Would remove paragraph (c)(5)(i), as it is redundant with the new paragraph (c)(10), and renumber the subsequent paragraphs within (c)(5).

10 CFR 40.13(c)(7)—Would revise the exemption for use of source material in optical lenses to: (1) Reduce the limit of 30 percent by weight thorium to 10 percent by weight thorium for glassware manufactured in the future; (2) accommodate lenses with coatings; (3) add uranium to the material that may be combined with or on the lenses; and (4) add mirrors.

10 CFR 40.13(c)(10)—Would add paragraph (c)(10) to restrict initial distribution under the exemption and direct one to requirements for authorization under an NRC specific license to initially transfer or distribute source material.

10 CFR 40.13(d)—Would remove an obsolete exemption for use of source material in fire detection units.

Section 40.22 Small Quantities of Source Material

10 CFR 40.22(a)(1)—Would apply a limit of 1.5 kg (3.3 lb) at any one time to certain forms of uranium and thorium that may be inhaled or ingested during normal working conditions and would restrict receipt to less than 7 kg (15.4 lb) per year.

10 CFR 40.22 (a)(2)—Would allow additional possession of certain forms of uranium and thorium that are not expected to be normally inhaled or ingested. However, the total amount of uranium and thorium possessed under the general license would still be limited to 7 kg (15.4 lb) at any one time and the receipt of no more than 70 kg (154 lb) of uranium and thorium per year.

10 CFR 40.22(a)(3)—Would allow persons removing uranium from drinking water to continue to possess up to 7 kg (15.4 lb) of uranium at any one time and to remove up to 70 kg (154 lb) of uranium from drinking water per calendar year.

10 CFR 40.22(b)(1)—Would continue to prohibit persons from administering source material, or the resulting radiation, either externally or internally, to human beings except as authorized by the NRC in a specific license.

10 CFR 40.22(b)(2)—Would clarify that any person who receives, possesses, uses, or transfers source material under § 40.22 may not abandon source material. The source material may be transferred under § 40.51 or permanently disposed. The general licensee would be allowed to dispose of up to a total of 0.5 kg (1.1 lb) per calendar year of source material through transfer to any person for permanent disposal as long as the source material is in a solid, non-dispersible form (*e.g.,* metal brick, encapsulated in cement, etc.). The recipient of the source material would not be required to obtain a license from the NRC as long as it was permanently disposed. Permanent disposal of quantities of source material exceeding 0.5 kg (1.1 lb) of source material per calendar year or in non-solid forms (*e.g.,* is readily ingested or inhaled) would be required to be in accordance with § 20.2001.

10 CFR 40.22(b)(3)—Would clarify which provisions in 10 CFR Part 40 apply under the general license.

10 CFR 40.22(b)(4)—Would add a provision to explicitly require that licensees must respond to written requests by the NRC.

10 CFR 40.22(b)(5)—Would clarify that export of source material is subject to 10 CFR Part 110.

10 CFR 40.22(c)—Would require that any person who receives, possesses, uses, or transfers source material in accordance with paragraph (a) of § 40.22 must conduct activities so as to minimize contamination of the facility and the environment.

10 CFR 40.22(d)—Would revise and move the requirements currently under paragraph (b) of this section to paragraph (d) of this section.

10 CFR 40.22(e)—Would restrict initial distribution for use under the general license to a specific license issued under § 40.54 or equivalent provisions of an Agreement State.

Section 40.32 General Requirements for Issuance of a Specific License

10 CFR 40.32(f)—Would add §§ 40.52 and 40.54 to the list of sections that have special requirements that need to be satisfied for the issuance of certain specific licenses.

Section 40.52 Certain Items Containing Source Material; Requirements for License To Apply or Initially Transfer

10 CFR 40.52—Would establish requirements for a license authorizing distribution for use under the exemptions from licensing in § 40.13(c) and equivalent provisions of Agreement States.

Section 40.53 Conditions of Licenses Issued Under § 40.52: Quality Control, Labeling, and Records and Reports

10 CFR 40.53—Would establish requirements for licenses issued under § 40.52, including reporting and recordkeeping requirements for distributions of products for use under § 40.13(c) and equivalent provisions of Agreement States.

Section 40.54 Requirements for License To Initially Transfer Source Material for Use Under § 40.22

10 CFR 40.54—Would establish requirements for a license authorizing initial transfer or distribution for use under § 40.22 and equivalent provisions of Agreement States.

Section 40.55 Conditions of Licenses Issued Under § 40.54: Quality Control, Labeling, Safety Instructions, Records and Reports

10 CFR 40.55—Would establish requirements for licenses issued under § 40.54, including reporting and recordkeeping requirements for distributions of source material for use under the general license in § 40.22 and equivalent provisions of Agreement States.

Section 40.82 Criminal Penalties

10 CFR 40.82(b)—Would add sections to the list of provisions that are not subject to criminal sanctions.

Section 70.5 Communications

10 CFR 70.5(b)(1)(iv)—Would add a reference to the proposed § 40.52 as a

licensing category not delegated to the NRC Regions.

Section 170.31 Schedule of Fees for Materials Licenses and Other Regulatory Services, Including Inspections, and Import and Export Licenses

10 CFR 170.31—Would add to the schedule of fees three new categories for distributors of source material.

Section 171.16 Annual Fees: Materials Licensees, Holders of Certificates of Compliance, Holders of Sealed Source and Device Registrations, Holders of Quality Assurance Program Approvals, and Government Agencies Licensed By NRC

10 CFR 171.16—Would add three fee categories for distributors of source material to the annual fees.

V. Criminal Penalties

For the purpose of Section 223 of the Atomic Energy Act (AEA), the Commission is proposing to amend § 40.22 and add §§ 40.53 and 40.55 under one or more of Sections 161b, 161i, or 161o of the AEA. Willful violations of the rule would be subject to criminal enforcement.

VI. Agreement State Compatibility

Under the "Policy Statement on Adequacy and Compatibility of Agreement State Programs"approved by the Commission on June 30, 1997, and published in the **Federal Register** (62 FR 46517; September 3, 1997), this proposed rule would be a matter of compatibility between the NRC and the Agreement States, thereby providing consistency among the Agreement States and the NRC requirements. The NRC staff analyzed the proposed rule in accordance with the procedure established within Part III, "Categorization Process for NRC Program Elements,"of Handbook 5.9 to Management Directive 5.9, "Adequacy and Compatibility of Agreement State Programs" (a copy of which may be viewed at *http://www.nrc.gov/reading-rm/doc-collections/management-directives/*).

NRC program elements (including regulations) are placed into four compatibility categories (see the Draft Compatibility Table in this section). In addition, the NRC program elements can also be identified as having particular health and safety significance or as being reserved solely to the NRC. Compatibility Category A are those program elements that are basic radiation protection standards and scientific terms and definitions that are necessary to understand radiation protection concepts. An Agreement State should adopt Category A program elements in an essentially identical manner to provide uniformity in the regulation of agreement material on a nationwide basis. Compatibility Category B are those program elements that apply to activities that have direct and significant effects in multiple jurisdictions. An Agreement State should adopt Category B program elements in an essentially identical manner. Compatibility Category C are those program elements that do not meet the criteria of Category A or B, but the essential objectives of which an Agreement State should adopt to avoid conflict, duplication, gaps, or other conditions that would jeopardize an orderly pattern in the regulation of agreement material on a nationwide basis. An Agreement State should adopt the essential objectives of the Category C program elements. Compatibility Category D are those program elements that do not meet any of the criteria of Category A, B, or C, above and, thus, do not need to be adopted by Agreement States for purposes of compatibility.

Health and Safety (H&S) are program elements that are not required for compatibility but are identified as having a particular health and safety role (*i.e.,* adequacy) in the regulation of agreement material within the State. Although not required for compatibility, the State should adopt program elements in this H&S category based on those of the NRC that embody the essential objectives of the NRC program elements, because of particular health and safety considerations. Compatibility Category NRC are those program elements that address areas of regulation that cannot be relinquished to Agreement States under the Atomic Energy Act, as amended, or provisions of Title 10 of the Code of Federal Regulations. These program elements are not adopted by Agreement States. The following table lists the Parts and Sections that would be revised and their corresponding categorization under the "Policy Statement on Adequacy and Compatibility of Agreement State Programs."

DRAFT COMPATIBILITY TABLE FOR PROPOSED RULE DISTRIBUTION OF SOURCE MATERIAL TO EXEMPT PERSONS AND TO GENERAL LICENSEES AND REVISION OF GENERAL LICENSE AND EXEMPTIONS

Section	Change	Subject	Compatibility	
			Existing	New
Part 30				
30.6	Amend	Communications	D	D
Part 40				
40.5	Amend	Communications	D	D
40.8	Amend	Information collection requirements: OMB approval	D	D
40.13(c)	Amend	Unimportant quantities of source material	B	B
40.13(c)(2)(i)	Amend	Unimportant quantities of source material	B	B
40.13(c)(2)(iii)	Amend	Unimportant quantities of source material	B	B
40.13(c)(7)	Amend	Unimportant quantities of source material	B	B
40.13(c)(10)	New	Unimportant quantities of source material		B
40.13(d)	Remove	Unimportant quantities of source material	B	*
40.22(a)	Amend	Small quantities of source material	B	B
40.22(a)(1)	New	Small quantities of source material		B
40.22(a)(2)	New	Small quantities of source material		B
40.22(a)(3)	New	Small quantities of source material		B
40.22(b)	Amend	Small quantities of source material (Previously 40.22(c))	B	B
40.22(b)(1)	New	Small quantities of source material		B
40.22(b)(2)	New	Small quantities of source material		B
40.22(b)(3)	New	Small quantities of source material		B

DRAFT COMPATIBILITY TABLE FOR PROPOSED RULE DISTRIBUTION OF SOURCE MATERIAL TO EXEMPT PERSONS AND TO GENERAL LICENSEES AND REVISION OF GENERAL LICENSE AND EXEMPTIONS—Continued

Section	Change	Subject	Compatibility	
			Existing	New
40.22(b)(4)	New	Small quantities of source material		D
40.22(b)(5)	New	Small quantities of source material		B
40.22(c)	New	Small quantities of source material		C
40.22(d)	Amend	Small quantities of source material (Previously 40.22(b))	B	B
40.22(e)	New	Small quantities of source material		B
40.52	New	Certain items containing source material; requirements for license to apply or initially transfer.		NRC
40.53	New	Conditions of licenses issued under § 40.52: Quality control, labeling, and records and reports.		NRC
40.54	New	Requirements for license to initially transfer source material for use under § 40.22.		B
40.55(a)	New	Conditions of licenses issued under § 40.54: Quality control, labeling, safety instructions, and records and reports.		B
40.55(b)	New	Conditions of licenses issued under § 40.54: Quality control, labeling, safety instructions, and records and reports.		B
40.55(c)	New	Conditions of licenses issued under § 40.54: Quality control, labeling, safety instructions, and records and reports.		B
40.55(d)	New	Conditions of licenses issued under § 40.54: Quality control, labeling, safety instructions, and records and reports.		B
40.55(e)	New	Conditions of licenses issued under § 40.54: Quality control, labeling, safety instructions, and records and reports.		C
40.82	Amend	Criminal penalties	D	D
Part 70				
70.5	Amend	Communications	D	D
Part 170				
170.31	Amend	Schedules of fees for materials licenses and other regulatory services, including inspections, and import and export licenses.	D	D
Part 171				
171.16	Amend	Annual fees for materials licenses and other regulatory services.	D	D

* Denotes an existing provision that is currently designated Compatibility Category B which would be removed from the regulations as a result of these proposed amendments. Agreement States should remove this provision from their regulations when the amendment becomes final.

The NRC invites comment on the compatibility category designations in the proposed rule and suggests that commenters refer to Handbook 5.9 of Management Directive 5.9 for more information. The NRC notes that, like the rule text, the compatibility category designations can change between the proposed rule and final rule, based on comments received and Commission decisions regarding the final rule. The NRC encourages anyone interested in commenting on the compatibility category designations in any manner to do so during the comment period.

VII. Plain Language

The Presidential Memorandum "Plain Language in Government Writing" published June 10, 1998 (63 FR 31883), directed that the Government's documents be in clear and accessible language. The NRC requests comments on this proposed rule specifically with respect to the clarity and effectiveness of the language used. Comments should be sent to the address listed under the **ADDRESSES** heading in this document.

VIII. Voluntary Consensus Standards

The National Technology Transfer and Advancement Act of 1995 (Pub. L. 104–113) requires that Federal agencies use technical standards that are developed or adopted by voluntary consensus standards bodies unless the use of such a standard is inconsistent with applicable law or otherwise impractical. In this proposed rule, the NRC would establish requirements for distributors of source material to persons exempt from regulation and to general licensees. In addition, the proposed amendments would modify the existing possession and use requirements for the general license for small quantities of source material to better align the requirements with current health and safety standards. The Commission is also proposing to revise, clarify, or delete certain exemptions from licensing to make the requirements for the use of source material under the exemptions more risk informed. The NRC is not aware of any voluntary consensus standards that address the proposed subject matter of this proposed rule. The NRC will consider using a voluntary consensus standard if an appropriate standard is identified. If

a voluntary consensus standard is identified for consideration, the submittal should explain why the standard should be used.

IX. Finding of No Significant Environmental Impact: Availability

The Commission has determined under the National Environmental Policy Act of 1969, as amended, and the Commission's regulations in Subpart A of 10 CFR Part 51, not to prepare an environmental impact statement for this proposed rule because the Commission has concluded on the basis of an environmental assessment that this proposed rule, if adopted, would not be a major Federal action significantly affecting the quality of the human environment.

The majority of the provisions in the proposed rule come within the scope of categorical exclusion in § 51.22, and as such, an environmental review is not necessary. The implementation of the remaining provisions of the proposed rule would not result in any significant negative impact to the environment. Proposed revisions to § 40.22 primarily provide additional limitations on, and clarify the requirements of, the § 40.22 general licensee, thus, potentially reducing the impact on environmental resources from the status quo. Similarly, certain exemptions are being revised or deleted to limit the future use of certain products containing source material. Although the NRC is proposing to expand the exemption from licensing in § 40.13(c)(7) to allow coated lenses, the NRC's evaluation indicated that these products contain significantly less source material than those currently authorized under the exemption. The Commission has determined that the implementation of this proposed rule would be procedural and administrative in nature.

The determination of this environmental assessment is that there would be no significant impact to the public from this action. However, the general public should note that the NRC welcomes public participation. Comments on any aspect of the Environmental Assessment may be submitted to the NRC as indicated under the **ADDRESSES** heading in this document.

The NRC has sent a copy of the Environmental Assessment and this proposed rule to every State Liaison Officer and requested their comments on the Environmental Assessment. The Environmental Assessment may be examined at the NRC Public Document Room, O–1F21, 11555 Rockville Pike, Rockville, MD 20852, or online at *http://www.regulations.gov* under Docket ID NRC–2009–0084.

X. Paperwork Reduction Act Statement

This proposed rule contains new or amended information collection requirements contained in 10 CFR Part 40 that are subject to the Paperwork Reduction Act of 1995 (44 U.S.C. 3501 *et seq*). These information requirements have been submitted to the Office of Management and Budget for review and approval of the information collection requirements. The proposed rule changes to 10 CFR Parts 30, 70, 170, and 171 do not contain new or amended information collection requirements.

Type of submission, new or revision: Revision.

The title of the information collection: 10 CFR Parts 30, 40, 70, 170, and 171; Distribution of Source Material to Exempt Persons and to General Licensees and Revision of General License and Exemptions.

The form number: NRC Form 313.

How often the collection is required: One time for licensing applications and amendments for new initial distribution licenses or for certain general licensees ceasing activities; annual for reports on initial distribution of source material; occasional for responses to direct NRC requests for information.

Who will be required or asked to report: Applicants and licensees who manufacture or initially distribute products or materials containing source material to persons exempt from the regulations or for use under a general license, and some users of source material possessed under a general license.

An estimate of the number of annual responses: 164.3 (10 CFR Part 19 = 1 response; 10 CFR Part 20 = 7 responses; 10 CFR Part 40 = 95 responses; NRC Form-313 = 12.3 responses, plus 49 recordkeepers).

The estimated number of annual respondents: 75 (10 CFR Part 19 = 1 respondent; 10 CFR Part 20 = 2.33 respondents; 10 CFR Part 40 = 75 respondents; NRC Form-313 = 11.3 respondents). Because some licensees may report under multiple parts, the total number of respondents for the proposed rule is 75 (40 NRC licensees plus 35 Agreement State licensees).

An estimate of the total number of hours needed annually to complete the requirement or request: 753.3 (10 CFR Part 19 = 45.3 hours; 10 CFR Part 20 = 255 hours; 10 CFR Part 40 = 361.4 hours, NRC Form-313 = 91.6 hours).

Abstract: The NRC is proposing to amend its regulations in 10 CFR Part 40 to establish new requirements for distributors of source material to persons exempt from the regulations or for use under a general license in § 40.22. In addition, the Commission is also proposing to modify the existing possession and use requirements for § 40.22 general licensees to align the requirements with current health and safety standards. Finally, the Commission is proposing to revise, clarify, or delete certain exemptions in § 40.13(c) to make the exemptions more risk informed. Conforming changes would be made to 10 CFR Parts 30, 70, 170 and 171. These changes would affect manufacturers and distributors of products and materials containing source material and future users of some products used under exemptions from licensing and under the § 40.22 general license.

Information collections would result from new requirements for certain persons initially distributing source material to obtain a specific license. These new specific licensees would be required to provide reports regarding their initial distributions of source material to the NRC and the Agreement States on an annual basis and maintain records of such reports, as well as meet existing information collection requirements in 10 CFR Parts 19 and 20. In addition, labeling requirements and notifications to recipients would be required for certain initial distributions of source material. Proposed revisions to the general license provisions in § 40.22 would specifically require the general licensee to respond to NRC requests for information in a timely manner and notify the NRC when ceasing activities if significant contamination is identified.

The NRC is seeking public comment on the potential impact of the information collections contained in the proposed rule and on the following issues:

1. Is the proposed information collection necessary for the proper performance of the functions of the NRC, including whether the information will have practical utility?

2. Is the estimate of burden accurate?

3. Is there a way to enhance the quality, utility, and clarity of the information to be collected?

4. How can the burden of the information collection be minimized, including the use of automated collection techniques?

A copy of the OMB clearance package may be viewed free of charge at the NRC Public Document Room, One White Flint North, 11555 Rockville Pike, Room O–1 F21, Rockville, MD 20852. The OMB clearance package and rule are available at the NRC worldwide Web site: *http://www.nrc.gov/public-involve/*

doc-comment/omb/index.html for 60 days after the signature date of this notice.

Send comments on any aspect of these proposed information collections, including suggestions for reducing the burden and on the above issues, by October 25, 2010 to the Information Services Branch (T–5 F52), U.S. Nuclear Regulatory Commission, Washington, DC 20555–0001, or Internet electronic mail to NEOB–10202 (3150–AH15), Office of Management and Budget, Washington, DC 20503. Comments on the proposed information collections may also be submitted via the Federal Rulemaking Web site *http://www.regulations.gov*, docket ID NRC–2009–0084. Comments received after this date will be considered if it is practical to do so, but assurance of consideration cannot be given to comments received after this date.

Public Protection Notification

The NRC may not conduct or sponsor, and a person is not required to respond to, a request for information or an information collection requirement unless the requesting document displays a currently valid OMB control number.

XI. Regulatory Analysis

The Commission has prepared a draft regulatory analysis on this proposed regulation. The analysis examines the costs and benefits of the alternatives considered by the Commission.

The Commission requests public comment on the draft regulatory analysis. Comments on the draft analysis may be submitted to the NRC as indicated under the **ADDRESSES** heading in this document. The analysis is available for inspection in the NRC Public Document Room, 11555 Rockville Pike, Rockville, MD 20852, or online at *www.regulations.gov* under Docket Number ID NRC–2009–0084. Single copies of the draft regulatory analysis are available from Gary Comfort, telephone: (301) 415–8106, e-mail: *Gary.Comfort@nrc.gov*, or Catherine Mattsen, telephone: (301) 415–6264, e-mail: *Catherine.Mattsen@nrc.gov*, of the Office of Federal and State Materials and Environmental Management Programs.

XII. Regulatory Flexibility Certification

In accordance with the Regulatory Flexibility Act of 1980 (5 U.S.C. 605(b)), the Commission certifies that this rule would not, if promulgated, have a significant economic impact on a substantial number of small entities. A significant number of the licensees affected by this action would meet the definition of "small entities" set forth in the Regulatory Flexibility Act or the Small Business Size Standards set out in regulations issued by the Small Business Administration at 13 CFR Part 121. However, none of the proposed revisions to the regulatory program would result in a significant economic impact on the affected entities.

XIII. Backfit Analysis

The NRC's backfit provisions are found in the regulations at §§ 50.109, 52.39, 52.63, 52.83, 52.98, 52.145, 52.171, 70.76, 72.62, and 76.76. The requirements contained in this proposed rule do not involve any provisions that would impose backfits on nuclear power plant licensees as defined in 10 CFR Parts 50 or 52, or on licensees for gaseous diffusion plants, independent spent fuel storage installations or special nuclear material as defined in 10 CFR Parts 70, 72 and 76, respectively, and as such a backfit analysis is not required. Therefore, a backfit analysis need not be prepared for this proposed rule to address these classes of entities. With respect to 10 CFR Part 40 licensees, the NRC has determined that there are no provisions for backfit in 10 CFR Part 40. Therefore, a backfit analysis need not be prepared for this proposed rule to address part 40 licensees.

List of Subjects

10 CFR Part 30

Byproduct material, Criminal penalties, Government contracts, Intergovernmental relations, Isotopes, Nuclear materials, Radiation protection, Reporting and recordkeeping requirements.

10 CFR Part 40

Criminal penalties, Government contracts, Hazardous materials transportation, Nuclear materials, Reporting and recordkeeping requirements, Source material, Uranium.

10 CFR Part 70

Criminal penalties, Hazardous materials transportation, Material control and accounting, Nuclear materials, Packaging and containers, Radiation protection, Reporting and recordkeeping requirements, Scientific equipment, Security measures, Special nuclear material.

10 CFR Part 170

Byproduct material, Import and export licenses, Intergovernmental relations, Nonpayment penalties, Nuclear materials, Nuclear power plants and reactors, Source material, Special nuclear material.

10 CFR Part 171

Annual charges, Byproduct material, Holders of certificates, registrations, approvals, Intergovernmental relations, Nonpayment penalties, Nuclear materials, Nuclear power plants and reactors, Source material, Special nuclear material.

For the reasons set out in the preamble and under the authority of the Atomic Energy Act of 1954, as amended; the Energy Reorganization Act of 1974, as amended; and 5 U.S.C. 553; the NRC is proposing to adopt the following amendments to 10 CFR parts 30, 40, and 70 and the following amendments to 10 CFR parts 170 and 171, as amended on June 16, 2010, at 75 FR 34220, effective August 16, 2010.

PART 30—RULES OF GENERAL APPLICABILITY TO DOMESTIC LICENSING OF BYPRODUCT MATERIAL

1. The authority citation for Part 30 continues to read as follows:

Authority: Secs. 81, 82, 161, 182, 183, 186, 68 Stat. 935, 948, 953, 954, 955, as amended, sec. 234, 83 Stat. 444, as amended (42 U.S.C. 2111, 2112, 2201, 2232, 2233, 2236, 2282); secs. 201, as amended, 202, 206, 88 Stat. 1242, as amended, 1244, 1246 (42 U.S.C. 5841, 5842, 5846); sec. 1704, 112 Stat. 2750 (44 U.S.C. 3504 note); Energy Policy Act of 2005, Pub. L. No. 109–58, 119 Stat. 549 (2005).

Section 30.7 also issued under Pub. L. 95–601, sec. 10, 92 Stat. 2951 as amended by Pub. L. 102–486, sec. 2902, 106 Stat. 3123 (42 U.S.C. 5851). Section 30.34(b) also issued under sec. 184, 68 Stat. 954, as amended (42 U.S.C. 2234). Section 30.61 also issued under sec. 187, 68 Stat. 955 (42 U.S.C. 2237).

2. In § 30.6, paragraph (b)(1)(iv) is revised to read as follows:

§ 30.6 Communications.

* * * * *

(b) * * *

(1) * * *

(iv) Distribution of products containing radioactive material to persons exempt under §§ 32.11 through 32.30 and § 40.52 of this chapter.

* * * * *

PART 40—DOMESTIC LICENSING OF SOURCE MATERIAL

3. The authority citation for Part 40 continues to read as follows:

Authority: Secs. 62, 63, 64, 65, 81, 161, 182, 183, 186, 68 Stat. 932, 933, 935, 948, 953, 954, 955, as amended, secs. 11e(2), 83, 84, Pub. L. 95–604, 92 Stat. 3033, as amended, 3039, sec. 234, 83 Stat. 444, as amended (42 U.S.C. 2014(e)(2), 2092, 2093,

2094, 2095, 2111, 2113, 2114, 2201, 2232, 2233, 2236, 2282); sec. 274, Pub. L. 86–373, 73 Stat. 688 (42 U.S.C. 2021); secs. 201, as amended, 202, 206, 88 Stat. 1242, as amended, 1244, 1246 (42 U.S.C. 5841, 5842, 5846); sec. 275, 92 Stat. 3021, as amended by Pub. L. 97–415, 96 Stat. 2067 (42 U.S.C. 2022); sec. 193, 104 Stat. 2835, as amended by Pub. L. 104–134, 110 Stat. 1321, 1321–349 (42 U.S.C. 2243); sec. 1704, 112 Stat. 2750 (44 U.S.C. 3504 note); Energy Policy Act of 2005, Pub. L. No. 109–59, 119 Stat. 594 (2005).

Section 40.7 also issued under Pub. L. 95–601, sec. 10, 92 Stat. 2951 as amended by Pub. L. 102–486, sec. 2902, 106 Stat. 3123 (42 U.S.C. 5851). Section 40.31(g) also issued under sec. 122, 68 Stat. 939 (42 U.S.C. 2152). Section 40.46 also issued under sec. 184, 68 Stat. 954, as amended (42 U.S.C. 2234). Section 40.71 also issued under sec. 187, 68 Stat. 955 (42 U.S.C. 2237).

4. In § 40.5, paragraph (b)(1)(iv) is revised to read as follows:

§ 40.5 Communications.

* * * * *

(b) * * *

(1) * * *

(iv) Distribution of products containing radioactive material to persons exempt under §§ 32.11 through 32.30 and § 40.52 of this chapter.

* * * * *

5. In § 40.8, paragraph (b) is revised to read as follows:

§ 40.8 Information collection requirements: OMB approval.

* * * * *

(b) The approved information collection requirements contained in this part appear in §§ 40.9, 40.22, 40.23, 40.25, 40.26, 40.27, 40.31, 40.34, 40.35, 40.36, 40.41, 40.42, 40.43, 40.44, 40.51, 40.52, 40.53, 40.54, 40.55, 40.60, 40.61, 40.64, 40.65, 40.66, 40.67, and appendix A to this part.

* * * * *

6. In § 40.13, the introductory text to paragraph (c), and paragraphs (c)(2)(i), (c)(2)(iii), (c)(5) and (c)(7) are revised, paragraph (c)(10) is added, and paragraph (d) is removed.

The revisions and addition read as follows:

§ 40.13 Unimportant quantities of source material.

* * * * *

(c) Any person is exempt from the requirements for a license set forth in section 62 of the Act and from the regulations in this part and parts 19, 20, and 21 of this chapter to the extent that such person receives, possesses, uses, or transfers:

* * * * *

(2) * * *

(i) Glazed ceramic tableware manufactured before [effective date of final rule], provided that the glaze contains not more than 20 percent by weight source material;

* * * * *

(iii) Glassware containing not more than 2 percent by weight source material or, for glassware manufactured before [effective date of final rule], 10 percent by weight source material; but not including commercially manufactured glass brick, pane glass, ceramic tile, or other glass or ceramic used in construction;

* * * * *

(5) Uranium contained in counterweights installed in aircraft, rockets, projectiles, and missiles, or stored or handled in connection with installation or removal of such counterweights: *Provided,* That:

(i) Each counterweight has been impressed with the following legend clearly legible through any plating or other covering: "Depleted Uranium"; [2]

(ii) Each counterweight is durably and legibly labeled or marked with the identification of the manufacturer, and the statement: "Unauthorized Alterations Prohibited"; [2]

(iii) The exemption contained in this paragraph shall not be deemed to authorize the chemical, physical, or metallurgical treatment or processing of any such counterweights other than repair or restoration of any plating or other covering.

* * * * *

(7) Thorium or uranium contained in or on finished optical lenses and mirrors, provided that each lens does not contain more than 10 percent by weight thorium or uranium or, for lenses manufactured before [effective date of the final rule], 30 percent by weight of thorium; and that the exemption contained in this paragraph does not authorize either:

(i) The shaping, grinding or polishing of such lens or mirror or manufacturing processes other than the assembly of such lens or mirror into optical systems and devices without any alteration of the lens or mirror; or

(ii) The receipt, possession, use, or transfer of uranium or thorium contained in contact lenses, or in spectacles, or in eyepieces in binoculars or other optical instruments.

* * * * *

(10) No person may initially transfer for sale or distribution a product containing source material to persons exempt under this paragraph (c), or equivalent regulations of an Agreement State, unless authorized by a license issued under § 40.52 to initially transfer such products for sale or distribution.

(i) Persons initially distributing source material in products covered by the exemptions in this paragraph (c) before [effective date of the final rule] without specific authorization may continue such distribution for 1 year beyond this date. Initial distribution may also be continued until the Commission takes final action on a pending application for license or license amendment to specifically authorize distribution submitted no later than 1 year beyond this date.

(ii) Persons authorized to manufacture, process, or produce materials or products containing source material by an Agreement State and persons who import finished products or parts for sale or distribution must be authorized by a license issued under § 40.52 for distribution only and are exempt from the requirements of parts 19 and 20 of this chapter, and § 40.32(b) and (c).

* * * * *

7. Section 40.22 is revised to read as follows:

§ 40.22 Small quantities of source material.

(a) A general license is hereby issued authorizing commercial and industrial firms; research, educational, and medical institutions; and Federal, State, and local government agencies to receive, possess, use, and transfer uranium and thorium, in their natural isotopic concentrations and in the form of depleted uranium, for research, development, educational, commercial, or operational purposes in the following forms and quantities:

(1) Not more than 1.5 kg (3.3 lb) of uranium and thorium in any form at any one time. A person authorized to possess, use, and transfer source material under this paragraph may not receive more than a total of 7 kg (15.4 lb) of uranium and thorium in any one calendar year. Source material possessed under paragraph (a)(2) of this section does not apply toward these limits; and

(2) Not more than 7 kg (15.4 lb) of uranium and thorium at any one time so long as the form is solid and non-dispersible. A person authorized to possess, use, and transfer source material under this paragraph may not receive more than a total of 70 kg (154 lb) of uranium and thorium in any one calendar year and may not alter the chemical or physical form of the source

[2] The requirements specified in paragraphs (c)(5)(i) and (c)(5)(ii) of this section need not be met by counterweights manufactured prior to December 31, 1969, provided that such counterweights were manufactured under a specific license issued by the Atomic Energy Commission and were impressed with the legend required by § 40.13(c)(5)(i) in effect on June 30, 1969.

material possessed under this paragraph. The total quantity of source material possessed under this paragraph must include source material possessed under paragraph (a)(1) of this section; or

(3) Not more than 7 kg (15.4 lb) of uranium, removed during the treatment of drinking water, at any one time. A person may not remove more than 70 kg (154 lb) of uranium from drinking water during a calendar year under this paragraph.

(b) Any person who receives, possesses, uses, or transfers source material in accordance with the general license in paragraph (a) of this section:

(1) Is prohibited from administering source material, or the radiation therefrom, either externally or internally, to human beings except as may be authorized by the NRC in a specific license.

(2) Shall not abandon such source material. Source material may be disposed of as follows:

(i) A cumulative total of 0.5 kg (1.1 lb) of source material in a solid, non-dispersible form may be transferred each calendar year, by a person authorized to receive, possess, use, and transfer source material under this general license to persons receiving the material for permanent disposal. The recipient of source material transferred under the provisions of this paragraph is exempt from the requirements to obtain a license under this part to the extent the source material is permanently disposed. This provision does not apply to any person who is in possession of source material under a specific license issued under this chapter; or

(ii) In accordance with § 20.2001 of this chapter.

(3) Is subject to the provisions in §§ 40.1 through 40.10, 40.41(a) through (e), 40.46, 40.51, 40.60 through 40.63, 40.71, and 40.81.

(4) Shall respond to written requests from the NRC to provide information relating to the general license within 30 calendar days of the date of the request, or other time specified in the request. If the person cannot provide the requested information within the allotted time, the person shall, within that same time period, request a longer period to supply the information by providing the Director of the Office of Federal and State Materials and Environmental Management Programs, using an appropriate method listed in § 40.5(a), a written justification for the request;

(5) Shall not export such source material except in accordance with part 110 of this chapter.

(c) Any person who receives, possesses, uses, or transfers source material in accordance with paragraph (a) of this section shall conduct activities so as to minimize contamination of the facility and the environment. When activities involving such source material are permanently ceased at any site, if evidence of significant contamination is identified, the general licensee shall notify the Director of the Office of Federal and State Materials and Environmental Management Programs by an appropriate method listed in § 40.5(a) about such contamination and may consult with the NRC as to the appropriateness of sampling and restoration activities to ensure that any contamination or residual source material remaining at the site where source material was used under this general license is not likely to result in exposures that exceed the limits in § 20.1402 of this chapter.

(d) Any person who receives, possesses, uses, or transfers source material in accordance with the general license granted in paragraph (a) of this section is exempt from the provisions of parts 19, 20, and 21 of this chapter to the extent that such receipt, possession, use, and transfer are within the terms of this general license, except that such person shall comply with the provisions of §§ 20.1402 and 20.2001 of this chapter to the extent necessary to meet the provisions of paragraphs (b)(2) and (c) of this section. However, this exemption does apply to any person who also holds a specific license issued under this chapter.

(e) No person may initially transfer or distribute source material to persons generally licensed under paragraph (a) of this section, or equivalent regulations of an Agreement State, unless authorized by a specific license issued in accordance with § 40.54 or equivalent provisions of an Agreement State. Initial distribution of source material to persons generally licensed by paragraph (a) of this section before [EFFECTIVE DATE OF FINAL RULE] without specific authorization may continue for 1 year beyond this date. Distribution may also be continued until the Commission takes final action on a pending application for license or license amendment to specifically authorize distribution submitted no later than 1 year beyond this date.

8. In § 40.32, paragraph (f) is revised to read as follows:

§ 40.32 General requirements for issuance of a specific license.

* * * * *

(f) The applicant satisfies any applicable special requirements contained in §§ 40.34, 40.52, and 40.54.

* * * * *

9. Sections 40.52, 40.53, 40.54, and 40.55 are added under the undesignated heading "Transfer of Source Material" to read as follows:

§ 40.52 Certain items containing source material; requirements for license to apply or initially transfer.

An application for a specific license to apply source material to, incorporate source material into, manufacture, process, or produce the products specified in § 40.13(c) or to initially transfer for sale or distribution any products containing source material for use under § 40.13(c) or equivalent provisions of an Agreement State will be approved if:

(a) The applicant satisfies the general requirements specified in § 40.32. However, the requirements of § 40.32(b) and (c) do not apply to an application for a license to transfer products manufactured, processed, or produced in accordance with a license issued by an Agreement State or to the import of finished products or parts.

(b) The applicant submits sufficient information regarding the product pertinent to the evaluation of the potential radiation exposures, including:

(1) Chemical and physical form and maximum quantity of source material in each product;

(2) Details of construction and design of each product, if applicable. For coated lenses, this must include a description of manufacturing methods that will ensure that the coatings are unlikely to be removed under the conditions expected to be encountered during handling and use;

(3) For products with applicable quantity or concentration limits, quality control procedures to be followed in the fabrication of production lots of the product and the quality control standards the product will be required to meet;

(4) The proposed method of labeling or marking each unit, and/or its container with the identification of the manufacturer or initial transferor of the product and the source material in the product; and

(5) The means of providing radiation safety precautions and instructions relating to handling, use, and storage of products to be used under § 40.13(c)(1)(i) and (c)(1)(iii).

(c) Each product will contain no more than the quantity or the concentration of source material specified for that product in § 40.13(c).

§ 40.53 Conditions of licenses issued under § 40.52: Quality control, labeling, and records and reports.

(a) Each person licensed under § 40.52 must ensure that the quantities or concentrations of source material do not exceed any applicable limit in § 40.13(c).

(b) Each person licensed under § 40.52 must ensure that each product is labeled as provided in the specific exemption under § 40.13(c). Those distributing products to be used under § 40.13(c)(1)(i) and (c)(1)(iii) or equivalent regulations of an Agreement State must provide radiation safety precautions and instructions relating to handling, use, and storage of these products as specified in the license.

(c)(1) Each person licensed under § 40.52 must file a report with the Director, Office of Federal and State Materials and Environmental Management Programs, by an appropriate method listed in § 40.5(a), including in the address: ATTN: Document Control Desk/Exempt Distribution.

(2) The report must clearly identify the specific licensee submitting the report and include the license number of the specific licensee and indicate that the products are transferred for use under § 40.13(c), giving the specific paragraph designation, or equivalent regulations of an Agreement State.

(3) The report must include the following information on products transferred to other persons for use under § 40.13(c) or equivalent regulations of an Agreement State:

(i) A description or identification of the type of each product and the model number(s), if applicable;

(ii) For each type of source material in each type of product and each model number, if applicable, the total quantity of the source material; and

(iii) The number of units of each type of product transferred during the reporting period by model number, if applicable.

(4) The licensee must file the report, covering the preceding calendar year, on or before January 31 of each year. Licensees who permanently discontinue activities authorized by the license issued under § 40.52 must file a report for the current calendar year within 30 days after ceasing distribution.

(5) If no transfers of source material have been made to persons exempt under § 40.13(c) or the equivalent regulations of an Agreement State, during the reporting period, the report must so indicate.

(6) The licensee must maintain all information concerning transfers that support the reports required by this section for 1 year after each transfer is included in a report to the Commission.

§ 40.54 Requirements for license to initially transfer source material for use under § 40.22.

An application for a specific license to initially transfer source material for use under § 40.22, or equivalent regulations of an Agreement State, will be approved if:

(a) The applicant satisfies the general requirements specified in § 40.32; and

(b) The applicant submits adequate information on and the Commission approves the methods to be used for quality control, labeling, and providing safety instructions to recipients.

§ 40.55 Conditions of licenses issued under § 40.54: Quality control, labeling, safety instructions, and records and reports.

(a) Each person licensed under § 40.54 must label the immediate container of each quantity of source material with the type of source material and quantity of material and the words, "radioactive material."

(b) Each person licensed under § 40.54 must ensure that the quantities and concentrations of source material are as labeled and indicated in any transfer records.

(c) Each person licensed under § 40.54 must provide the information specified in this paragraph to each person to whom source material is transferred for use under § 40.22 or equivalent provisions in Agreement State regulations. This information must be transferred before the source material is transferred for the first time in each calendar year to the particular recipient. The required information includes:

(1) A copy of §§ 40.22 and 40.51, or relevant equivalent regulations of the Agreement State.

(2) Appropriate radiation safety precautions and instructions relating to handling, use, storage, and disposal of the material.

(d) Each person licensed under § 40.54 must report transfers as follows:

(1) File a report with the Director, Office of Federal and State Materials and Environmental Management Programs, U.S. Nuclear Regulatory Commission, Washington, DC 20555. The report shall include the following information:

(i) The name, address, and license number of the person who transferred the source material;

(ii) For each general licensee under § 40.22 or equivalent Agreement State regulations to whom greater than 50 grams (0.11 lb) of source material has been transferred in a single calendar quarter, the name and address of the general licensee to whom source material is distributed; a responsible agent, by name and/or position and phone number, of the general licensee to whom the material was sent; and the type, physical form, and quantity of source material transferred; and

(iii) The total quantity of each type and physical form of source material transferred in the reporting period to all such generally licensed recipients.

(2) File a report with the responsible Agreement State agency for transfers of greater than 50 grams (0.11 lb) of source material transferred to a general licensee in an Agreement State within a calendar quarter. The report shall include the following information specific to those transfers made to the Agreement State being reported to:

(i) The name, address, and license number of the person who transferred the source material; and

(ii) The name and address of the general licensee to whom source material was distributed; a responsible agent, by name and/or position and phone number, of the general licensee to whom the material was sent; and the type, physical form, and quantity of source material transferred.

(iii) The total quantity of each type and physical form of source material transferred in the reporting period to all such generally licensed recipients within the Agreement State.

(3) Submit each report by January 31 of each year covering all transfers for the previous calendar year. If no transfers were made to persons generally licensed under § 40.22 or equivalent Agreement State provisions during the current period, a report shall be submitted to the Commission indicating so. If no transfers have been made to general licensees in a particular Agreement State during the reporting period, this information must be reported to the responsible Agreement State agency upon request of the agency.

(e) Each person licensed under § 40.54 must maintain all information that supports the reports required by this section concerning each transfer to a general licensee for a period of 1 year after the event is included in a report to the Commission or to an Agreement State agency.

10. In § 40.82, paragraph (b) is revised to read as follows:

§ 40.82 Criminal penalties.

* * * * *

(b) The regulations in part 40 that are not issued under sections 161b, 161i, or 161o for the purposes of section 223 are as follows: §§ 40.1, 40.2, 40.2a, 40.4, 40.5, 40.6, 40.8, 40.11, 40.12, 40.13, 40.14, 40.20, 40.21, 40.31, 40.32, 40.34,

40.43, 40.44, 40.45, 40.52, 40.54, 40.71, 40.81, and 40.82.

PART 70—DOMESTIC LICENSING OF SPECIAL NUCLEAR MATERIAL

11. The authority citation for part 70 continues to read as follows:

Authority: Secs. 51, 53, 161, 182, 183, 68 Stat. 929, 930, 948, 953, 954, as amended, sec. 234, 83 Stat. 444, as amended (42 U.S.C. 2071, 2073, 2201, 2232, 2233, 2282, 2297f); secs. 201, as amended, 202, 204, 206, 88 Stat. 1242, as amended, 1244, 1245, 1246 (42 U.S.C. 5841, 5842, 5845, 5846). Sec. 193, 104 Stat. 2835 as amended by Pub.L. 104–134, 110 Stat. 1321, 1321–349 (42 U.S.C. 2243); sec. 1704, 112 Stat. 2750 (44 U.S.C. 3504 note); Energy Policy Act of 2005, Pub. L. 109–58, 119 Stat. 194 (2005).

Sections 70.1(c) and 70.20a(b) also issued under secs. 135, 141, Pub. L. 97–425, 96 Stat. 2232, 2241 (42 U.S.C. 10155, 10161).

Section 70.7 also issued under Pub. L. 95–601, sec. 10, 92 Stat. 2951 as amended by Pub. L. 102–486, sec. 2902, 106 Stat. 3123 (42 U.S.C. 5851). Section 70.21(g) also issued under sec. 122, 68 Stat. 939 (42 U.S.C. 2152). Section 70.31 also issued under sec. 57d, Pub. L. 93–377, 88 Stat. 475 (42 U.S.C. 2077). Sections 70.36 and 70.44 also issued under sec. 184, 68 Stat. 954, as amended (42 U.S.C. 2234). Section 70.81 also issued under secs. 186, 187, 68 Stat. 955 (42 U.S.C. 2236, 2237). Section 70.82 also issued under sec. 108, 68 Stat. 939, as amended (42 U.S.C. 2138).

12. In § 70.5, paragraph (b)(1)(iv) is revised to read as follows:

§ 70.5 Communications.

* * * * *

(b) * * *

(1) * * *

(iv) Distribution of products containing radioactive material to persons exempt under §§ 32.11 through 32.30 and 40.52 of this chapter.

* * * * *

PART 170—FEES FOR FACILITIES, MATERIALS, IMPORT AND EXPORT LICENSES AND OTHER REGULATORY SERVICES UNDER THE ATOMIC ENERGY ACT OF 1954, AS AMENDED

13. The authority citation for part 170 continues to read as follows:

Authority: Sec. 9701, Pub. L. 97–258, 96 Stat. 1051 (31 U.S.C. 9701); sec. 301, Pub. L. 92–314, 86 Stat. 227 (42 U.S.C. 2201w); sec. 201, Pub. L. 93–438, 88 Stat. 1242, as amended (42 U.S.C. 5841); sec. 205a, Pub. L. 101–576, 104 Stat. 2842, as amended (31 U.S. C. 901, 902); sec. 1704, 112 Stat. 2750 (44 U.S.C. 3504 note); sec. 623, Pub. L. 109–58, 119 Stat. 783 (42 U.S.C. 2201(w)); sec. 651(e), Pub. L. 109–58, 119 Stat. 806–810 (42 U.S.C. 2014, 2021, 2021b, 2111).

14. Section 170.31 is amended by redesignating materials license category 2.C. as category 2.F. and revising it, and by adding new categories 2.C., 2.D., and 2.E. to read as follows:

§ 170.31 Schedules of fees for materials licenses and other regulatory services, including inspections, and import and export licenses.

* * * * *

SCHEDULES OF MATERIALS FEES

[See footnotes at end of table]

Categories of materials licenses and types of fees [1]	Fee [1] [2]
* * * * * * *	
2. Source material.	
* * * * * * *	
C. Licenses to distribute items containing source material to persons exempt from the licensing requirements of part 40 of this chapter.	
Application [Program Code(s): 11240]	$7,000
D. Licenses to distribute source material to persons generally licensed under part 40 of this chapter.	
Application [Program Code(s): 11230 and 11231]	2,000
E. Licenses for possession and use of source material for processing or manufacturing of products or materials containing source material for commercial distribution.	
Application [Program Code(s): 11710]	10,200
F. All other specific source material licenses.	
Application [Program Code(s): 11200, 11220, 11221, 11300, 11800, 11810]	10,200
* * * * * * *	

[1] *Types of fees*—Separate charges, as shown in the schedule, will be assessed for pre-application consultations and reviews; applications for new licenses, approvals, or license terminations; possession only licenses; issuances of new licenses and approvals; certain amendments and renewals to existing licenses and approvals; safety evaluations of sealed sources and devices; generally licensed device registrations; and certain inspections. The following guidelines apply to these charges:

(a) *Application and registration fees.* Applications for new materials licenses and export and import licenses; applications to reinstate expired, terminated, or inactive licenses except those subject to fees assessed at full costs; applications filed by Agreement State licensees to register under the general license provisions of 10 CFR 150.20; and applications for amendments to materials licenses that would place the license in a higher fee category or add a new fee category must be accompanied by the prescribed application fee for each category.

(1) Applications for licenses covering more than one fee category of special nuclear material or source material must be accompanied by the prescribed application fee for the highest fee category.

(2) Applications for new licenses that cover both byproduct material and special nuclear material in sealed sources for use in gauging devices will pay the appropriate application fee for fee Category 1.C. only.

(b) *Licensing fees.* Fees for reviews of applications for new licenses, renewals, and amendments to existing licenses, pre-application consultations and other documents submitted to the NRC for review, and project manager time for fee categories subject to full cost fees are due upon notification by the Commission in accordance with § 170.12(b).

(c) *Amendment fees.* Applications for amendments to export and import licenses must be accompanied by the prescribed amendment fee for each license affected. An application for an amendment to an export or import license or approval classified in more than one fee category must be accompanied by the prescribed amendment fee for the category affected by the amendment, unless the amendment is applicable to two or more fee categories, in which case the amendment fee for the highest fee category would apply.

(d) *Inspection fees.* Inspections resulting from investigations conducted by the Office of Investigations and non-routine inspections that result from third-party allegations are not subject to fees. Inspection fees are due upon notification by the Commission in accordance with § 170.12(c).

(e) *Generally licensed device registrations under 10 CFR 31.5.* Submittals of registration information must be accompanied by the prescribed fee.

[2] Fees will not be charged for orders related to civil penalties or other civil sanctions issued by the Commission under 10 CFR 2.202 or for amendments resulting specifically from the requirements of these orders. For orders unrelated to civil penalties or other civil sanctions, fees will be charged for any resulting licensee-specific activities not otherwise exempted from fees under this chapter. Fees will be charged for approvals issued under a specific exemption provision of the Commission's regulations under Title 10 of the *Code of Federal Regulations* (*e.g.,* 10 CFR 30.11, 40.14, 70.14, 73.5, and any other sections in effect now or in the future), regardless of whether the approval is in the form of a license amendment, letter of approval, safety evaluation report, or other form. In addition to the fee shown, an applicant may be assessed an additional fee for sealed source and device evaluations as shown in Categories 9.A. through 9.D.

[3] Full cost fees will be determined based on the professional staff time multiplied by the appropriate professional hourly rate established in § 170.20 in effect when the service is provided, and the appropriate contractual support services expended. For applications currently on file for which review costs have reached an applicable fee ceiling established by the June 20, 1984 and July 2, 1990 rules, but are still pending completion of the review, the cost incurred after any applicable ceiling was reached through January 29, 1989 will not be billed to the applicant. Any professional staff-hours expended above those ceilings on or after January 30, 1989 will be assessed at the applicable rates established by § 170.20, as appropriate, except for topical reports for which costs exceed $50,000. Costs which exceed $50,000 for each topical report, amendment, revision, or supplement to a topical report completed or under review from January 30, 1989 through August 8, 1991 will not be billed to the applicant. Any professional hours expended on or after August 9, 1991 will be assessed at the applicable rate established in § 170.20.

PART 171—ANNUAL FEES FOR REACTOR LICENSES AND FUEL CYCLE LICENSES AND MATERIALS LICENSES, INCLUDING HOLDERS OF CERTIFICATES OF COMPLIANCE, REGISTRATIONS, AND QUALITY ASSURANCE PROGRAM APPROVALS, AND GOVERNMENT AGENCIES LICENSED BY NRC

15. The authority citation for part 171 continues to read as follows:

Authority: Sec. 7601, Pub. L. 99–272, 100 Stat. 146, as amended by sec. 5601, Pub. L. 100–203, 101 Stat. 1330 as amended by sec. 3201, Pub. L. 101–239, 103 Stat. 2132, as amended by sec. 6101, Pub. L. 101–508, 104 Stat. 1388, as amended by sec. 2903a, Pub. L. 102–486, 106 Stat. 3125 (42 U.S.C. 2213, 2214), and as amended by Title IV, Pub. L. 109–103, 119 Stat. 2283 (42 U.S.C. 2214); sec. 301, Pub. L. 92–314, 86 Stat. 227 (42 U.S.C. 2201w); sec. 201, Pub. L. 93–438, 88 Stat. 1242, as amended (42 U.S.C. 5841); sec. 1704, 112 Stat. 2750 (44 U.S.C. 3504 note); sec. 651(e), Pub. L. 109–58, 119 Stat. 806–810 (42 U.S.C. 2014, 2021, 2021b, 2111).

16. In § 171.16, the table in paragraph (d) is amended by redesignating materials license category 2.C. as category 2.F. and revising it, and by adding new categories 2.C., 2.D., and 2.E. to read as follows:

§ 171.16 Annual fees: Materials licensees, holders of certificates of compliance, holders of sealed source and device registrations, holders of quality assurance program approvals and government agencies licensed by the NRC.

* * * * *

(d) * * *

SCHEDULE OF MATERIALS ANNUAL FEES AND FEES FOR GOVERNMENT AGENCIES LICENSED BY NRC

[See footnotes at end of table]

Category of materials licenses	Annual fees [1] [2] [3]
* * * * * * *	
2. Source Material.	
* * * * * * *	
C. Licenses to distribute items containing source material to persons exempt from the licensing requirements of part 40 of this chapter [Program Code(s): 11240]	$10,000
D. Licenses to distribute source material to persons generally licensed under part 40 of this chapter [Program Code(s): 11230 and 11231]	5,000
E. Licenses for possession and use of source material for processing or manufacturing of products or materials containing source material for commercial distribution. [Program Code(s): 11710]	21,100
F. All other specific source material licenses. [Program Code(s): 11200, 11220, 11221, 11300, 11800, 11810]	21,100
* * * * * * *	

[1] Annual fees will be assessed based on whether a licensee held a valid license with the NRC authorizing possession and use of radioactive material during the current FY. The annual fee is waived for those materials licenses and holders of certificates, registrations, and approvals who either filed for termination of their licenses or approvals or filed for possession only/storage licenses before October 1, 2009, and permanently ceased licensed activities entirely before this date. Annual fees for licensees who filed for termination of a license, downgrade of a license, or for a possession-only license during the FY and for new licenses issued during the FY will be prorated in accordance with the provisions of § 171.17. If a person holds more than one license, certificate, registration, or approval, the annual fee(s) will be assessed for each license, certificate, registration, or approval held by that person. For licenses that authorize more than one activity on a single license (*e.g.,* human use and irradiator activities), annual fees will be assessed for each category applicable to the license. Licensees paying annual fees under Category 1.A.(1) are not subject to the annual fees for Categories 1.C. and 1.D. for sealed sources authorized in the license.

[2] Payment of the prescribed annual fee does not automatically renew the license, certificate, registration, or approval for which the fee is paid. Renewal applications must be filed in accordance with the requirements of parts 30, 40, 70, 71, 72, or 76 of this chapter.

[3] Each FY, fees for these materials licenses will be calculated and assessed in accordance with § 171.13 and will be published in the FEDERAL REGISTER for notice and comment.

* * * * *

Dated at Rockville, Maryland, this 20th day of July 2010.

For the Nuclear Regulatory Commission.

Annette Vietti-Cook,

Secretary of the Commission.

[FR Doc. 2010–18223 Filed 7–23–10; 8:45 am]

BILLING CODE 7590–01–P

DEPARTMENT OF THE TREASURY

Alcohol and Tobacco Tax and Trade Bureau

27 CFR Part 9

[Docket No. TTB–2010–0003; Notice No. 107; Re: Notice No.105]

RIN 1513–AB41

Proposed Establishment of the Pine Mountain-Mayacmas Viticultural Area; Comment Period Extension

AGENCY: Alcohol and Tobacco Tax and Trade Bureau, Treasury.

ACTION: Notice of proposed rulemaking; extension of comment period.

SUMMARY: In response to a request from a viticulture industry group, we are extending the comment period for Notice No. 105, Proposed Establishment of the Pine Mountain-Mayacmas Viticultural Area, a notice of proposed rulemaking published in the **Federal Register** on May 27, 2010, for an additional 45 days.

DATES: Written comments on Notice No. 105 are now due or before September 9, 2010.

ADDRESSES: You may send comments on this notice to one of the following addresses:

- *http://www.regulations.gov:* Use the comment form for this notice as posted within Docket No. TTB–2010–0003 on "Regulations.gov," the Federal e-rulemaking portal, to submit comments via the Internet;
- *Mail:* Director, Regulations and Rulings Division, Alcohol and Tobacco Tax and Trade Bureau, P.O. Box 14412, Washington, DC 20044–4412.
- *Hand Delivery/Courier in Lieu of Mail:* Alcohol and Tobacco Tax and Trade Bureau, 1310 G Street, NW., Suite 200–E, Washington, DC 20005.

See the "Public Participation" section of this notice for specific instructions and requirements for submitting comments, and for information on how to request a public hearing.

You may view copies of this notice, the original notice of proposed rulemaking (Notice No. 105), selected supporting materials, and any comments we receive about the proposed establishment of the Pine Mountain-Mayacmas viticultural area within Docket No. TTB–2010–0003 at *http://www.regulations.gov.* A direct link to this docket is posted on the TTB Web site at *http://www.ttb.gov/wine/wine-rulemaking.shtml* under Notice No. 105. You also may view copies of this notice, all supporting materials, and any comments we receive about this proposal by appointment at the TTB Information Resource Center, 1310 G Street, NW., Washington, DC 20220. Please call 202–453–2270 to make an appointment.

FOR FURTHER INFORMATION CONTACT: N.A. Sutton, Regulations and Rulings Division, Alcohol and Tobacco Tax and Trade Bureau, 925 Lakeville St., No. 158, Petaluma, CA 94952; phone 415–271–1254.

SUPPLEMENTARY INFORMATION: TTB received a petition from Sara Schorske of Compliance Service of American, prepared and filed on her own behalf and that of local wine industry members to establish the 4,600-acre Pine Mountain-Mayacmas viticultural area in northern California. About two-thirds of the proposed viticultural area lies in the extreme southern portion of Mendocino County, with the remaining one-third located in the extreme northern portion of Sonoma County.

The proposed Pine Mountain-Mayacmas viticultural area is totally within the multicounty North Coast viticultural area (27 CFR 9.30) and it overlaps the northernmost portions of the established Alexander Valley viticultural area (27 CFR 9.53) and the Northern Sonoma viticultural area (27 CFR 9.70).

In Notice No. 105 published in the **Federal Register** (75 FR 29682) on Thursday, May 27, 2010, we described the petitioners' rationale for the proposed establishment of the Pine Mountain-Mayacmas viticultural area and requested comments on the proposal on or before July 26, 2010.

On July 16, 2010, we received a letter request from attorney Richard Mendelson on behalf of the Napa Valley Vintners (NVV), a wine industry trade association. The request explained that due to the periodic scheduling of the NVV's committee and board of directors meetings, the group would be unable to meet the original July 26, 2010, comment deadline for Notice No. 105. The letter therefore requested a 45-day extension to the comment period for Notice No. 105 to allow the NVV to complete and thoroughly vet its comments on the proposed viticultural area.

In response to this request we extend the comment period for Notice No. 105 an additional 45 days. Therefore, the comments on Notice No. 105 are now due on or before September 9, 2010.

Drafting Information

Michael Hoover of the Regulations and Rulings Division drafted this notice.

Signed: July 20, 2010.

John J. Manfreda,

Administrator.

[FR Doc. 2010–18177 Filed 7–23–10; 8:45 am]

BILLING CODE 4810–31–P

DEPARTMENT OF JUSTICE

28 CFR Part 35

[CRT Docket No. 111]

RIN 1190–AA62

Nondiscrimination on the Basis of Disability in State and Local Government Services; Accessibility of Next Generation 9-1-1

AGENCY: Department of Justice, Civil Rights Division.

ACTION: Advance notice of proposed rulemaking.

SUMMARY: The Department of Justice (Department) is considering revising the regulation implementing title II of the Americans with Disabilities Act (ADA) to address in what manner public entities that operate 9-1-1 call-taking centers (also known as Public Safety Answering Points (PSAPs)) should be required to make changes in telecommunication technology to reflect developments that have occurred since the publication of the Department's 1991 regulation. Under its existing title II regulation, the Department requires that PSAPs provide direct, equal access to telephone emergency centers for individuals with disabilities who use analog text telephones (TTYs).[1] Many individuals with disabilities now use the Internet and wireless text devices as their primary modes of telecommunications. At the same time, PSAPs are considering and planning to shift from analog telecommunications technology to new Internet-Protocol (IP)-enabled Next Generation 9-1-1 services (NG 9-1-1) that will provide voice and data (such as text, pictures, and video) capabilities. This ANPRM seeks information on possible revisions to the Department's regulation to ensure

[1] TTYs are also known as "telecommunications devices for the deaf" (TDDs).

direct access to NG 9-1-1 services for individuals with disabilities.

DATES: The Department invites written comments from members of the public. Written comments must be postmarked and electronic comments must be submitted on or before January 24, 2011.

Commenters should be aware that the electronic Federal Docket Management System would not accept comments after Midnight Eastern Time on the last day of the comment period.

ADDRESSES: You may submit comments, identified by RIN 1190–AA62 (or Docket ID No. 111), by any one of the following methods:

• *Federal eRulemaking Web site: http://www.regulations.gov.* Follow the Web site instructions for submitting comments. The Regulations.gov Docket ID is DOJ–CRT–0111.

• *Regular U.S. mail:* Disability Rights Section, Civil Rights Division, U.S. Department of Justice, P.O. Box 2885, Fairfax, VA 22031–0885.

• *Overnight, courier or hand delivery:* Disability Rights Section, Civil Rights Division, U.S. Department of Justice, 1425 New York Avenue, NW., Suite 4039, Washington, DC 20005.

FOR FURTHER INFORMATION CONTACT: Robert Mather, Attorney, Disability Rights Section, Civil Rights Division, U.S. Department of Justice, at (202) 307–0663 (voice or TTY). This is not a toll-free number. Information may also be obtained from the Department's toll-free ADA Information Line at (800) 514–0301 (voice) or (800) 514–0383 (TTY).

You may obtain copies of this ANPRM in large print or Braille or on audiotape or computer disk by calling the ADA Information Line at (800) 514–0301 (voice) and (800) 514–0383 (TTY). This ANRPM is also available on the ADA Home Page at *http://www.ada.gov.*

SUPPLEMENTARY INFORMATION:

I. Electronic Submission of Comments and Posting of Public Comments

You may submit electronic comments to *http://www.regulations.gov.* When submitting comments electronically, you must include DOJ–CRT 0111 in the search field, and you must include your full name and address. Electronic files should avoid the use of special characters or any form of encryption and should be free of any defects or viruses.

Please note that all comments received are considered part of the public record and made available for public inspection online at *http://www.regulations.gov.* Submission postings will include any personal identifying information (such as your name, address, *etc.*) included in the text of your comment. If you include personal identifying information (such as your name, address, *etc.*) in the text your comment, but do not want it to be posted online, you must include the phrase "PERSONAL IDENTIFYING INFORMATION" in the first paragraph of your comment. You must also include all the personal identifying information you want redacted along with this phrase. Similarly, if you submit confidential business information as part of your comment but do not want it posted online, you must include the phrase "CONFIDENTIAL BUSINESS INFORMATION" in the first paragraph of your comment. You must also prominently identify confidential business information to be redacted within the comment. If a comment has so much confidential business information that it cannot be effectively redacted, all or part of that comment may not be posted on *http://www.regulations.gov.*

Comments on this ANPRM will also be made available for public viewing by appointment at the Disability Rights Section, located at 1425 New York Avenue, NW., Suite 4039, Washington, DC 20005, during normal business hours. To arrange an appointment to review the comments, please contact the ADA Information Line at (800) 514–0301 (voice) or (800) 514–0383 (TTY).

The reason that the Civil Rights Division is requesting electronic comments before Midnight Eastern Time on the day the comment period closes is because the inter-agency Regulations.gov/Federal Docket Management System (FDMS) which receives electronic comments terminates the public's ability to submit comments at Midnight on the day the comment period closes. Commenters in time zones other than Eastern may want to take this fact into account so that their electronic comments can be received. The constraints imposed by the Regulations.gov/FDMS system do not apply to U.S. postal comments, which will be considered as timely filed if they are postmarked before Midnight on the day the comment period closes.

II. Public Hearing

The Department will hold at least one public hearing to solicit comments on the issues presented in this notice. The Department plans to hold the public hearing during the 180-day public comment period. The date, time, and location of the public hearing will be announced to the public in the **Federal Register** and on the Department's ADA Home Page, *http://www.ada.gov/.*

III. Background

A. Statutory and Rulemaking History

On July 26, 1990, President George H.W. Bush signed into law the ADA, a comprehensive civil rights law prohibiting discrimination on the basis of disability. The ADA broadly protects the rights of individuals with disabilities in employment, access to State and local government services, places of public accommodation, transportation, and other important areas of American life. The ADA also requires newly designed and constructed or altered State and local government facilities, public accommodations, and commercial facilities to be readily accessible to and usable by individuals with disabilities. 42 U.S.C. 12101 *et seq.* Section 204(a) of title II and section 306(b) of title III direct the Attorney General to promulgate regulations to carry out the provisions of titles II and III, other than certain provisions dealing specifically with transportation. 42 U.S.C. 12134; 42 U.S.C. 12186(b).

Title II applies to State and local government entities, and, in Subtitle A, protects qualified individuals with disabilities from discrimination on the basis of disability in services, programs, and activities provided by State and local government entities. Title II extends the prohibition on discrimination established by section 504 of the Rehabilitation Act of 1973, as amended, 29 U.S.C. 794 (section 504), to all activities of State and local governments regardless of whether these entities receive Federal financial assistance. 42 U.S.C. 12131–65.

Title III prohibits discrimination on the basis of disability in the activities of places of public accommodation (private entities whose operations affect commerce and that fall into one of twelve categories listed in the ADA, such as restaurants, movie theaters, schools, day care facilities, recreational facilities, and doctors' offices) and requires newly constructed or altered places of public accommodation—as well as commercial facilities (privately owned, nonresidential facilities such as factories, warehouses, or office buildings)—to comply with the ADA Standards. 42 U.S.C. 12181–89.

On July 26, 1991, the Department issued its final rules implementing title II and title III, which are codified at 28 CFR part 35 (title II) and part 36 (title III). Appendix A of the title III regulation, at 28 CFR part 36, app. A, contains the ADA Standards for Accessible Design. On September 30, 2004, the Department published an advance notice of proposed rulemaking

(2004 ANPRM) to begin the process of updating the 1991 regulations to adopt revised ADA Standards based on the relevant parts of the 2004 ADA/ABA Guidelines. 69 FR 58768. On June 17, 2008, the Department issued a Notice of Proposed Rulemaking (2008 NPRM) to adopt the revised ADA Standards and revise the title II and title III regulations. 73 FR 34466. The NPRM addressed the issues raised in the public's comments to the ANPRM and sought additional comment.

Although the Department did not propose to include NG 9-1-1 accessibility provisions in the 2008 NPRM, the Department received comments urging it to amend the title II rule to mandate that PSAPs move towards the implementation of NG 9-1-1 services that will provide voice and data (such as text, pictures, and video) capabilities so that they will be able to directly receive various kinds of voice-, text- and video-based "calls." Several commenters, including the National Emergency Number Association (NENA) and the National Association of the Deaf, requested the development of standards for direct access to NG 9-1-1. Based on these comments and the reasons detailed below, the Department has decided to begin the process of soliciting comments and suggestions with respect to what an NPRM regarding NG 9-1-1 access should contain.

B. Legal Foundation for Access to NG 9-1-1

The Department's current title II regulation, as interpreted and administered by the Department, requires that PSAPs provide direct access to individuals with disabilities who use TTYs. 28 CFR 35.162. The Department has interpreted title II so as to require that PSAPs provide "direct, equal access" to 9-1-1 for individuals with disabilities who use TTYs. Direct access means that PSAPs must be able to directly receive TTY calls without relying on an outside relay service or third-party services, i.e., the PSAP must be able to engage in TTY-to-TTY calls. Equal access requires that 9-1-1 services provided for individuals who use TTYs be as effective as those provided for individuals who make voice calls, in terms of response time, response quality, hours of operation, and all other features offered (*e.g.,* automatic number identification, automatic location identification, automatic call distribution). PSAPs also must follow proper procedures and practices when TTY calls are received, including Voice-Carry Over (VCO) and Hearing-Carry Over (HCO).[2]

The Department recognizes that many individuals with disabilities now rely on Internet Protocol (IP)-based and digital wireless devices, rather than analog-based TTYs, as their primary modes of telecommunications and 9-1-1 call-taking centers are shifting from existing traditional telephone emergency services to new IP-enabled NG 9-1-1 services. Therefore, this ANPRM seeks comments from members of the public and covered entities on possible revisions to the title II rule to establish new requirements and guidance to ensure that NG 9-1-1 services are made accessible to, and usable by, individuals with disabilities.

This ANPRM identifies specific issues on which the Department solicits comment. The Department is also interested in comments on any other issues that affect access to NG 9-1-1 services. The Department will consider all comments before deciding whether to propose revisions to the title II regulation.

The Department requests comments regarding appropriate steps to provide individuals with disabilities with access to NG 9-1-1 technology at 9-1-1 emergency call-taking centers, including converging[3] IP 9-1-1 technologies that are as effective as those provided for individuals without disabilities. In this ANPRM, the Department is asking two key questions: (1) What devices and modes of communication (voice, text, video, and data) are individuals with disabilities using to make "calls," including emergency calls?, and (2) what steps should the Department take to ensure that any new IP-based PSAP platforms can receive direct calls from these devices?

C. Major Migration in Communications Devices and 9-1-1 Services

As communication technologies are developing, individuals with disabilities are transitioning from analog or legacy devices to digital and IP-based devices. Among these devices are both wired and mobile videophones, text messaging wireless devices, including "smart" phones, as well as computers (including computers with Web cams) and captioned telephones. Many PSAPs or emergency 9-1-1 call-taking centers are not yet equipped to directly receive video calls or text calls over the Internet. As a result, individuals who have to call 9-1-1 using their IP-based videophone or texting device must call through third-party telecommunications relay services (TRS). TRS uses a relay operator called a communication assistant (CA) who relays the call between the caller using text or video and the PSAP.[4] In most IP-based video- or text-relay services, the CA receives the call from the person originating the call, places the call to the PSAP, and then relays the conversation between the caller and the PSAP.[5] Relay services are under the jurisdiction of the Federal Communications Commission (FCC).[6]

The 9-1-1 number has been designated for public use throughout the United States to report an emergency, request emergency assistance, or both. The original 9-1-1 system is based on traditional telephone technology, which cannot process text, data, image, and video sent from handheld devices and computers (*e.g.,* personal digital assistant (PDA), cellular phone, portable media player, video phone, or camera). To address the changing technology, State and local governments are working to improve their 9-1-1 emergency communications systems and are moving towards an IP-enabled network. The ultimate goal is to have an emergency network that will enable the general public to make a 9-1-1 "call" via voice, text, or video from wired and wireless devices and directly communicate with personnel at the

[2] Many persons who became deaf or hard of hearing later in life prefer to speak instead of type. They use what is called voice carryover (VCO). With VCO, the caller speaks directly into the phone, and the call taker types back via TTY to the caller. VCO can be accomplished with standard stand-alone TTY equipment simply by having the call taker alternate between listening on the handset when the caller is speaking and placing the handset in the TTY couplers to type a response. People with speech impairments who are not deaf or hard of hearing often prefer HCO. HCO allows them to type their words on a TTY to call takers and hear call takers' spoken responses through their handset. HCO can be accomplished by a call taker using standard stand-alone TTY equipment by alternating speaking into the handset and placing the handset in the TTY when the caller types a response. For more information about the title II requirements for PSAPs, you may consult the Department's ADA technical assistance manual, *http://www.usdoj.gov/crt/ada/911ta.pdf* (last visited July 12, 2010).

[3] "Convergence" is the integration of traditional telecommunications and newer information technology services.

[4] *See generally Telecommunications Relay Services and Speech-to-Speech Services for Individuals with Hearing and Speech Disabilities; E911 Requirements for IP–Enabled Service Providers,* CG Docket No. 03–1123, WC Docket No. 05–196, Report and Order and Further Notice of Proposed Rulemaking, 23 FCC Rcd 11591 (June 24, 2008) (adopting new emergency call handling requirements).

[5] Captioned telephone relay calls are set up somewhat differently, with the caller placing the call directly to the party being called (the PSAP) at the same time that the call is connected to the CA. The CA does not need to place the call separately to the PSAP.

[6] *See generally* 47 CFR 64.601 *et seq.* (the TRS regulations).

PSAP. Several States, regions, and counties, including Indiana, Montana, Vermont, Texas, Florida, Minnesota, Allegheny County, Pennsylvania and the District of Columbia, are either considering or implementing an IP network or next generation related components in preparation for NG 9-1-1. *http://www.nena.org/ng911-project/state-status* (last visited July 12, 2010).

The Department is aware of two PSAPs' efforts to provide access to individuals with disabilities who use smart phones as texting devices. For example, in 2003, the police department in Sacramento, California began to accept "9-1-1" e-mails from individuals with disabilities. That police department also has accepted e-mails from as far away as Los Angeles and Texas asking Sacramento police to relay emergency information to their local authorities. *http://www.helpkidshear.org/news/media/2003/2003–11–21-cbs.htm* (last visited July 12, 2010). Another PSAP, Black Hawk County, Iowa, recently started to receive and respond to short message service (SMS) messages from cell phones or pagers. See Enforcing the ADA, Update April, September 2009, page 12, available at *http://www.ada.gov/aprsep09.pdf* (last visited July 12, 2010). With these additional services, individuals with disabilities are able to report an accident or other emergency quickly using their PDAs, without the necessity of locating and using a TTY or relying on another person to report the incident

D. Other Federal Efforts

The Department is familiar with ongoing efforts by other Federal agencies to ensure that advances in telecommunications systems, including NG 9-1-1 services, are accessible for all Americans, including individuals with disabilities. The National E–911 Implementation Coordination Office (National 9-1-1 Office) issued in September 2009, a national plan (Plan) for migrating to IP-enabled 9-1-1 Systems. *See* National Plan for Migrating to IP–Enabled 9-1-1 Systems, available at *http://www.ntis.gov/search/product.aspx?ABBR=PB2010102716* (last visited June 5, 2010). As required by the NET 911 Improvement Act, 47 U.S.C. 942(d), the Plan identified and analyzed 9-1-1 system migration issues and assessed potential options to resolve them. The Plan drew heavily from the United States Department of Transportation's (DOT) NG 9-1-1 Initiative work and findings. DOT had concluded that IP-enabled systems provide the optimal technical solution for future 9-1-1 networks. One of the requirements of the NET 9-1-1 Improvement Act is to identify solutions for providing 9-1-1 and enhanced 9-1-1 access to individuals with disabilities and needed steps to implement such solutions. 47 U.S.C. 942(d)(I). In addressing policy barriers and issues, the National 9-1-1 Office stated that "to foster the migration to IP-enabled 9-1-1, Federal * * * regulatory agencies will need to review current * * * regulations to keep pace with the rapidly changing 9-1-1 marketplace." Plan, at 5–10.

Last year, DOT's National Highway Traffic Safety Administration and the United States Department of Commerce's National Telecommunications and Information Administration announced more than $40 million in grants to help PSAPs nationwide implement next-generation technologies.

Another Federal agency has called for action to ensure that IP technology is accessible to individuals with disabilities. The National Council on Disability, in its 2006 report, *The Need for Federal Legislation and Regulation Prohibiting Telecommunications and Information Services Discrimination,*[7] calls for such Federal action because experience has shown that market forces are not sufficient to ensure individuals with disabilities equal access to emerging technologies. As the responsible agency for writing regulations to ensure that 9-1-1 services are accessible to individuals with disabilities,[8] in this ANPRM the Department is seeking comments from the public, including 9-1-1 stakeholders, in addressing barriers to NG 9-1-1 and ensuring access to NG 9-1-1 services.

The FCC has recently undertaken a number of broadband[9] initiatives. One of these initiatives seeks to improve the nation's current 9-1-1 system by establishing the foundation for the transmission of voice, data, or video to PSAPs during emergency calls. Broadband & Public Safety and Homeland Security, *http://www.fcc.gov/pshs/broadband.html* (last visited July 12, 2010). In another NG 9-1-1 matter, the FCC's Communications Security, Reliability and Interoperability Council's working group is considering ways that NG 9-1-1 architectures and technologies can provide access for individuals with disabilities. *See http://www.fcc.gov/pshs/advisory/csric/wg-4b.pdf* (last visited July 12, 2010). With respect to emergency calls made via TRS (*i.e.,* through a relay operator), the FCC has implemented new numbering and E9-1-1 requirements for Video Relay Services and IP-Relay Services. New Numbering and E911 Requirements for VRS and IP Relay Video In American Sign Language (ASL), *http://www.fcc.gov/cgb/dro/numbering_and_e911_for_vrs_ip.html* (last visited June 5, 2010). Access to PSAPs via TRS is not addressed in this ANPRM.

IV. Request for Public Comments

The Department is seeking public comment on the issues discussed below. In addition to seeking comments in response to the specific questions raised in this ANPRM, the Department is particularly interested in receiving comments from all of those who have a stake in ensuring that NG 9-1-1 is accessible to individual people with disabilities, advocacy groups, representatives from Tribal, local, State, and Federal governments, public safety organizations, and industry professionals, about the potential application of the new requirements to plans for migration to, and deployment of, NG 9-1-1 services.

The prospect of developing new title II requirements for access to NG 9-1-1 raises a number of general issues, including determining which performance-based standards or technical specifications would better ensure access to NG 9-1-1 to determining the effective date for the application of the new provisions. Responses should clearly identify the specific question being addressed according to the numbered questions in this document.

A. Direct, Equal Access to NG 9-1-1

Question 1. What modes of communication (*e.g.,* voice, text, video, or data) do (or will) individuals with disabilities use to make direct calls to a PSAP, and from what types of devices would the calls be made?

i. Text Communications

IP allows several formats of text communications, divided into two types: real-time, and non-real-time. Real-time text communications refer to those that are sent and received on a character-by-character basis; the characters are sent immediately once typed and also displayed immediately to the receiving person. In an emergency, sending text communications to a PSAP in real-time may save valuable time that is needed to effectively respond to the emergency.

[7] *http://www.ncd.gov/newsroom/publications/2006/discrimination.htm* (last visited June 5, 2010).

[8] *See* 42 U.S.C. 12134(a).

[9] The term "broadband" refers to advanced communications systems capable of providing high-speed transmission of services such as data, voice, and video over the Internet and other networks.

Non-real-time communications rely on messaging capabilities where users "type-enter-wait-read-respond-reply"—*e.g.,* short messages service (SMS) texts, multimedia messaging service (MMS), instant messaging (IM), text chat, and e-mail. When this type of messaging is used, messages can overlap one another. In an emergency, this could result in the caller or PSAP personnel responding to each other out of the order in which their communications were sent, creating some confusion or delay. The agenda for the FCC's National Broadband Plan states that this year, the FCC will open a proceeding to identify a reliable, interoperable, real-time text standard to enable consumers to communicate in a digital and IP-based environment. Broadband Action Agenda, *http://www.broadband.gov/plan/national-broadband-plan-action-agenda.pdf* at 4.10 (last visited July 12, 2010).[10]

Currently, telephone 9-1-1 technologies support TTYs, which provide text communications in an analog environment. Using IP-based devices, PSAPs would require a text gateway in order to converse with individuals using analog-based devices.

Question 2. Should the Department issue a requirement for NG 9-1-1 technologies to support text communications along with analog-based TTY communications? If so, should NG 9-1-1 text technologies be backward compatible with analog-based TTYs or should the two communication methods be available side by side?

Question 3. Which, if any, of the following text options should the Department designate as essential accessibility features of NG 9-1-1 to be incorporated into the initial deployment of an NG 9-1-1 system to assure equal access to emergency call-taking centers for individuals with disabilities?

a. Real-time text.
b. Short message service (SMS).
c. Instant messaging (IM).
d. E-mail.
e. Analog gateway.
f. Other modes of text communication.

The Department recognizes that all of these text options will benefit not only individuals who are deaf or hard of hearing, but also individuals with other disabilities who require an alternative mean to making a voiced 9-1-1 call due to their disabilities. The Department recognizes that a State or local government's NG 9-1-1 system may eventually provide all of these options in the future. However, the Department is interested in learning how each of the options would benefit individuals with disabilities in order to determine whether they should be designated as "essential" to providing access to NG 9-1-1.

Individuals with disabilities are increasingly using smart phones since they are currently the only accessible mobile devices available for text messaging (*e.g.,* e-mail, SMS, or IM). Until NG 9-1-1 services are implemented, PSAPs will not be able to receive text messages sent directly to 9-1-1 from these devices.

Question 4. For this period, should a PSAP develop and implement an interim plan to receive text messages directly or via a third party? How should a PSAP develop an interim plan? What solutions should PSAPs consider as part of their interim plan?

Question 5. Are there significant issues related to the interoperability of messages sent by text that need to be addressed in any final regulation?

ii. Video Communications

A technology that has emerged since publication of the original title II rule allows individuals who use sign language to communicate by video. An individual who communicates by American Sign Language (ASL) may use a videophone or other video device (*e.g.,* a Web cam connector to a computer) to directly communicate in sign language with either another videophone user or a voice telephone user. In the latter case, videophones can be used to make TRS calls (Video Relay Service) or to use remote sign language interpreting services (video remote interpreting or VRI) when an in-person interpreter is not available. VRI is generally a fee-based service. NG 9-1-1 technologies will allow video phone users to make direct video calls to a PSAP and allow the callers and the emergency personnel to engage in virtual face-to-face communication.

The Department is seeking comments on what steps a PSAP, in providing video services, should take to ensure effective communication with a 9-1-1 caller who uses sign language for communication. One possible method of communication for handling a direct video-to-video call between the individual with disabilities and the PSAP would be through the use of VRI. Upon receipt of a request for sign language services, the PSAP would make a call to a VRI service center and connect the interpreter so that the interpreter appears on both the caller's and PSAP's video phone screens. The call would then become a 3-way video call between the caller and PSAP, both using the interpreter. The PSAP would see both the interpreter and caller on the PSAP's screen, and both the interpreter and the caller would see each other on their screens. Using this method, the PSAP would have the ability to "conference in" (virtually instantaneously) a qualified interpreter (in-house or in a remote facility)

Question 6. In implementing NG 9-1-1, should the Department amend its title II regulation to require each PSAP to provide VRI service? If so, should the Department regulate how to provide such service?

With NG 9-1-1, call routing allows the sharing of networks to route calls for multiple numbers (*e.g.,* 2-1-1, 3-1-1, 8–1–1, suicide hotline, poison control). Also, NG 9-1-1 enables call access, transfer, and backup between and among 9-1-1 call-taking centers and between these centers and specialized emergency services.

Question 7. Should a center also be allowed to transfer a caller's call to a particular center where call takers are trained and fluent in oral/sign language interpreting services or where call takers are trained in working with individuals with speech impairments? If so, should a final rule address call routing policies that restrict or prohibit such transfers?

The title II rule requires that when an oral or sign language interpreter is necessary for effective communication, the interpreter must be "qualified." The rule has defined "qualified interpreter" as "an interpreter who is able to interpret effectively, accurately, and impartially both receptively and expressively, using any necessary specialized vocabulary." 28 CFR 35.104. Although the definition does not require "certified" interpreters, it does require interpreters with the necessary skills to interpret accurately in the particular context.

Question 8. In the context of NG 9-1-1, the Department is asking for public views on whether PSAPs should use only those interpreters who are specifically trained to handle emergency calls in using interpreting services on-site or via VRI.

Question 9. The Department also seeks comments on any other methods for ensuring equal access to NG 9-1-1 for individuals with disabilities. Should the Department issue standards for other methods to provide accessible NG 9-1-1 services? Should the Department require specialized training to ensure that these services can effectively

[10] In addition, the United States Access Board recently proposed draft guidelines for real-time text functionality for adoption by Federal agencies. Draft Information and Communication technology (ICT) Standards and Guidelines *http://www.access-board.gov/sec508/refresh/draft-rule.htm* at Section 902 (last visited July 12, 2010).

respond to the needs of people with disabilities in an NG 9-1-1 environment?

B. Performance Standards as Opposed to Technical Standards

The Department is aware of ongoing efforts by both the National Emergency Number Association (NENA) and the Association of Public-Safety Communications Officials International to develop technical standards for guidance to service providers, equipment manufacturers, and industry-related standard setting bodies. The Department has used the performance standard of "direct access" for PSAPs in enforcing title II.

Consistent with the Department's existing approach, the Department is considering the use of performance standards, as opposed to technical standards, as new title II requirements for access to NG 9-1-1. Two primary considerations support this approach. First, in light of evolving 9-1-1 technologies, it may not be feasible to have identical scoping and technical specifications nationwide to ensure disability access to NG 9-1-1. Second, performance standards would contain flexibility to allow operational standards, protocols, and best practices to be adopted and implemented to meet unique State and local circumstances and needs.

Question 10. Should any regulatory provision on NG 9-1-1 requirements under title II be performance-based, or should a final rule provide technical specifications for call-taking technology and equipment? Please provide as much detail as possible in support of your view.

Question 11. What are the technical issues that the Department should address in developing minimum standards?

NENA, a leading professional, nonprofit organization on 9-1-1 services, has actively worked with public safety, industry, and government groups, to develop technical and operational standards for NG 9-1-1 systems and services.

Question 12. Should the Department adopt any of NENA's standards as the minimum standards for direct access to NG 9-1-1 services for individuals with disabilities?

Speech-to-speech service (STS) is a form of TRS that involves the use of relay operators for people with speech disabilities who have difficulty being understood on the phone. STS relay operators are trained individuals familiar with many different speech patterns and language recognition skills. The relay operator makes the call and repeats the words exactly. Individuals using STS include those with cerebral palsy, Parkinson's disease, a laryngectomy, ALS, stuttering, muscular dystrophy, stroke, and other conditions affecting clarity of speech.[11]

Question 13. Should the title II regulation be amended to require that PSAPs directly receive calls from individuals with speech disabilities?

C. Emergency Alerts

Public entities in many communities now send pre-recorded emergency alert messages to homes and businesses automatically by phone. For instance, emergency personnel can use emergency alerts to notify residents in the path of approaching wildfires, hurricanes, or tornadoes to seek immediate shelter or evacuate their homes. Emergency alert systems can also be set up to send emergency alert text messages to smart phones, TTYs, PDAs, and e-mail accounts. Many colleges and universities now use this kind of emergency alert system for their students, parents and staff.

Converging 9-1-1 technologies will make it possible to send automatic emergency alerts to any communication device—wired or mobile—via Internet networks. For instance, vehicles approaching a motor vehicle accident involving hazardous materials could be notified of the danger, thereby preventing other vehicles from further complicating the accident or hindering emergency personnel. The Department will not address any other emergency mass notifications, such as Federal efforts for a Common Alerting Protocol, a next generation alerting delivery system by which standardized alerts will be gathered from various alerting sources and distributed to the public (in text, audio and video) via information outlets, public safety alerting systems and personal communication devices.

Question 14. Should the regulation be amended to address sending emergency alerts to text, video, and other devices used by individuals with disabilities?

D. State and Local Plans To Ensure Access to NG 9-1-1 for Individuals with Disabilities

Title II of the ADA and the Department's implementing regulation provide that State and local government agencies must make reasonable modifications to their policies, practices, and procedures whenever necessary to avoid discrimination against individuals with disabilities unless making the modification would fundamentally alter the nature of the service, program or activity, or would result in undue financial and administrative burdens. 28 CFR 35.130(b)(7) (reasonable modifications in policies); 28 CFR 35.164 (undue burdens). A growing number of State and local governments have studied options for IP-based 9-1-1 networks in preparation for moving to NG 9-1-1 and have developed NG 9-1-1 migration/transition plans. The Department believes that in developing new or reviewing current NG 9-1-1 plans, State and local 9-1-1 agencies must include specific plans for equal access to NG 9-1-1 for individuals with disabilities.

Question 15. In their NG 9-1-1 plans, how should PSAPs address issues related to access for individuals with disabilities?

E. Effective Date

Any regulation in this area needs to address an effective date for the application of any proposed new title II requirements to upgrades to 9-1-1 networks with emerging IP technologies or existing NG 9-1-1 services. When the ADA was enacted, the effective dates for various provisions were delayed in order to provide time for public entities to become familiar with their new obligations. Title II of the ADA generally became effective on January 26, 1992, six months after the regulation was published.

Question 16. Should the effective date of any new title II requirements be modeled on the effective date used to implement the title II requirements and commence six months after publication of the final rule, or a longer period? If you favor a longer period, please indicate what period you favor and provide as much detail as possible in support of your view.

The term "triggering event" identifies the event or action that compels compliance with title II requirements. The Department's regulation implementing title II of the ADA (28 CFR Part 35) does not establish any separate triggering events for access to emergency telephone services. Many PSAPs are making transitions to new IP networks; it is expected that some may not be completed until after the effective date of the new requirements.

Question 17. If you favor a triggering event definition that looks to the date of deployment or upgrade, please provide as much detail as possible about what should constitute an IP deployment or upgrade.

Question 18. If you favor triggering events other than an IP deployment/upgrade, please state what event you favor and provide as much detail as possible to support your proposal.

[11] *http://www.fcc.gov/cgb/dro/sts.html* (last visited July 8, 2010).

F. Defenses

The title II rule does not require a public entity to take any action that it can demonstrate would result in a fundamental alteration in the nature of a service, program, or activity or in undue financial and administrative burdens. 28 CFR 35.164. The Department has taken a long-standing position that, because of the essential nature of 9-1-1 services, that limitation would rarely be applied to the obligation to ensure effective communication in the context of 9-1-1.

Question 19. The Department seeks comments on whether there are certain circumstances where providing direct access to emerging NG 9-1-1 would be considered a fundamental alteration to the nature of the 9-1-1 service or be an undue financial or administrative burden on the PSAP. Please provide as much detail as possible.

G. Cost and Benefits of NG 9-1-1 Regulations

Because this is an ANPRM, the Department is not required, at this time, to conduct certain economic analyses or written assessments that otherwise may be required for other more formal types of agency regulatory actions (*e.g.,* notices of proposed rulemaking or final rules) that, for example, are deemed to be economically "significant" regulatory actions with an annual economic impact of $100 million or more or that are expected to have a significant economic effect on a substantial number of small entities or non-Federal governmental jurisdictions (such as State, local, or Tribal governments). *See, e.g.,* Regulatory Flexibility Act of 1980, 5 U.S.C. 603–04 (2006); E.O. 13272, 67 FR 53461 (Aug. 13, 2002); E.O. 12866, 58 FR 51735 (Sept. 30, 1993), as amended by E.O. 13497, 74 FR 6113 (Jan. 30, 2009); OMB Budget Circular A–4, *http://www.whitehouse.gov/OMB/circulars/a004/a-4.pdf* (last visited June 5, 2010). The Department does not currently believe that any future proposed rules relating to the accessibility of NG 9-1-1 services will likely meet the economic threshold for these types of formal economic analyses and written assessments.

Nonetheless, one of the purposes of this ANPRM is to seek public comment on various topics relating to NG 9-1-1 services, including perspectives from stakeholders concerning the benefits and costs of revising the Department's title II regulation to ensure the accessibility of NG 9-1-1 services (from both a quantitative and qualitative perspective), particularly from members of the disability community, governmental entities, and public safety organizations. The Department thus asks for information so that the Department can determine whether such a proposed rule (1) should be deemed an economically "significant regulatory action" as defined in section 3(f) of E.O. 12866; or (2) would have a significant economic impact on a substantial number of small entities within the meaning of the Regulatory Flexibility Act (RFA) and, if so, suggested alternative regulatory approaches to minimize any such impact. The RFA defines small governmental jurisdictions as governments of cities, counties, towns, townships, villages, school districts, or special districts with a population of less than 50,000.

Question 20. The Department encourages commenters, whenever possible, to submit detailed quantitative or qualitative information along with their respective comments relating to: the cost of NG 9-1-1 technology or services; the incremental impact on covered governmental entities to transition from current requirements for accessible analog 9-1-1 services to proposed accessible NG 9-1-1 services, including but not limited to training PSAP employees and updating 9-1-1 plans and operating procedures; personal anecdotes or experiences of individuals with disabilities illustrating the potential benefits of accessible NG 9-1-1 services; and any other information that would assist the Department in assessing the benefits and costs of proposed regulatory revisions for NG 9-1-1.

H. Other Issues

Question 21. Are there additional issues or information not addressed by the Department's questions that are important for the Department to consider? Please provide as much detail as possible in your response.

Dated: July 21, 2010.

Thomas E. Perez,

Assistant Attorney General, Civil Rights Division.

[FR Doc. 2010–18336 Filed 7–22–10; 4:15 pm]

BILLING CODE 4410–13–P

DEPARTMENT OF JUSTICE

28 CFR Parts 35 and 36

[CRT Docket No. 113]

RIN 1190–AA64

Nondiscrimination on the Basis of Disability by State and Local Governments and Places of Public Accommodation; Equipment and Furniture

AGENCY: Department of Justice, Civil Rights Division.

ACTION: Advance Notice of Proposed Rulemaking.

SUMMARY: The Department of Justice (Department) is considering possible changes to requirements under titles II and III of the Americans with Disabilities Act (ADA) to ensure that equipment and furniture used in programs and services provided by public entities and public accommodations are accessible to individuals with disabilities. In this Advance Notice of Proposed Rulemaking (ANPRM), the Department is seeking public input on issues relating to possible revisions of ADA regulations to ensure the accessibility of equipment and furniture in such programs and services and also is seeking background information for the regulatory assessment that the Department may need to prepare if it revises its regulations.

DATES: The Department invites written comments from members of the public. Written comments must be postmarked and electronic comments must be submitted on or before January 24, 2011. Commenters should be aware that the electronic Federal Docket Management System will not accept comments after Midnight Eastern Time on the last day of the comment period.

ADDRESSES: You may submit comments, identified by RIN 1190–AA64 (or Docket ID No. 113), by any one of the following methods:

- *Federal eRulemaking Web site: www.regulations.gov.* Follow the Web site instructions for submitting comments.
- *Regular U.S. mail:* Disability Rights Section, Civil Rights Division, U.S. Department of Justice, P.O. Box 2885, Fairfax, VA 22031–0885.
- *Overnight, courier, or hand delivery:* Disability Rights Section, Civil Rights Division, U.S. Department of Justice, 1425 New York Avenue, NW., Suite 4039, Washington, DC 20005.

FOR FURTHER INFORMATION CONTACT: Sarah DeCosse, Attorney Advisor, Disability Rights Section, Civil Rights

Division, U.S. Department of Justice, at (202) 307–0663 (voice or TTY). This is not a toll-free number. Information may also be obtained from the Department's toll-free ADA Information Line at (800) 514–0301 (voice) or (800) 514–0383 (TTY).

You may obtain copies of this ANPRM in large print or Braille or on audiotape or computer disk by calling the ADA Information Line at (800) 514–0301 (voice) and (800) 514–0383 (TTY). This ANPRM is also available on the ADA Home Page at *http://www.ada.gov.*

SUPPLEMENTARY INFORMATION:

I. Electronic Submission of Comments and Posting of Public Comments

You may submit electronic comments to: *http://www.regulations.gov.* When submitting comments electronically, you must include CRT Docket No. 113 in the subject box, and you must include your full name and address. Electronic files should avoid the use of special characters or any form of encryption and should be free of any defects or viruses.

Please note that all comments received are considered part of the public record and made available for public inspection online at *http://www.regulations.gov.* Submission postings will include any personal identifying information (such as your name, address, etc.) included in the text of your comment. If you include personal identifying information (such as your name, address, etc.) in the text your comment, but do not want it to be posted online, you must include the phrase "PERSONAL IDENTIFYING INFORMATION" in the first paragraph of your comment. You must also include all the personal identifying information you want redacted along with this phrase. Similarly, if you submit confidential business information as part of your comment but do not want it posted online, you must include the phrase "CONFIDENTIAL BUSINESS INFORMATION" in the first paragraph of your comment. You must also prominently identify confidential business information to be redacted within the comment. If a comment has so much confidential business information that it cannot be effectively redacted, all or part of that comment may not be posted on: *http://www.regulations.gov.*

Comments on this ANPRM will also be made available for public viewing by appointment at the Disability Rights Section, located at 1425 New York Avenue, NW., Suite 4039, Washington, DC 20005, during normal business hours. To arrange an appointment to review the comments, please contact the ADA Information Line at (800) 514–0301 (voice) or (800) 514–0383 (TTY).

The reason that the Civil Rights Division is requesting electronic comments before midnight Eastern Time on the day the comment period closes is because the inter-agency Regulations.gov/Federal Docket Management System (FDMS) which receives electronic comments terminates the public's ability to submit comments at midnight on the day the comment period closes. Commenters in time zones other than Eastern may want to take this fact into account so that their electronic comments can be received. The constraints imposed by the Regulations.gov/FDMS system do not apply to U.S. postal comments, which will be considered as timely filed if they are postmarked before midnight on the day the comment period closes.

II. Public Hearing

The Department will hold at least one public hearing to solicit comments on the issues presented in this notice. The Department plans to hold the public hearing during the 180-day public comment period. The date, time, and location of the public hearing will be announced to the public in the **Federal Register** and on the Department's ADA Home Page: *http://www.ada.gov.*

III. Proposed Action/Summary

The Department is seeking information to assist it in determining if it should propose specific accessibility requirements for non-fixed equipment and furniture, including medical equipment, exercise equipment, accessible golf cars, accessible beds, and electronic and information technology, by entities subject to title II or title III of the ADA.

IV. Background

A. Statutory and Rulemaking History

On July 26, 1990, President George H.W. Bush signed into law the ADA, a comprehensive civil rights law prohibiting discrimination on the basis of disability. The ADA broadly protects the rights of individuals with disabilities in employment, access to State and local government services, places of public accommodation, transportation, and other important areas of American life. The ADA also requires newly designed and constructed or altered State and local government facilities, public accommodations, and commercial facilities to be readily accessible to and usable by individuals with disabilities. 42 U.S.C. 12101 *et seq.* Section 204 (a) of title II and section 306(b) of title III direct the Attorney General to promulgate regulations to carry out the provisions of titles II and III, other than certain provisions dealing specifically with transportation. 42 U.S.C. 12134; 42 U.S.C. 12186(b).

Title II applies to State and local government entities, and, in Subtitle A, protects qualified individuals with disabilities from discrimination on the basis of disability in services, programs, and activities provided by State and local government entities. Title II extends the prohibition on discrimination established by section 504 of the Rehabilitation Act of 1973, as amended, 29 U.S.C. 794 (section 504), to all activities of State and local governments regardless of whether these entities receive Federal financial assistance. 42 U.S.C. 12131–65.

Title III prohibits discrimination on the basis of disability in the activities of places of public accommodation (private entities whose operations affect commerce and that fall into one of twelve categories listed in the ADA, such as restaurants, movie theaters, schools, day care facilities, recreational facilities, and doctors' offices) and requires newly constructed or altered places of public accommodation—as well as commercial facilities (privately owned, nonresidential facilities such as factories, warehouses, or office buildings)—to comply with the ADA Standards. 42 U.S.C. 12181–89.

On July 26, 1991, the Department issued its final rules implementing title II and title III, which are codified at 28 CFR part 35 (title II) and part 36 (title III). Appendix A of the title III regulation, at 28 CFR part 36, contains the ADA Standards for Accessible Design (1991 Standards). These Standards resulted from the Department's incorporation into the rule of the 1991 ADA Accessibility Guidelines (1991 ADAAG) promulgated by the U.S. Architectural and Transportation Barriers Compliance Board (Access Board). The Department is a member of the Access Board and participates in its development of accessibility guidelines. On September 30, 2004, the Department published an advance notice of proposed rulemaking (2004 ANPRM) to begin the process of updating the 1991 regulations and to adopt revised ADA Standards based on the relevant parts of the Access Board's 2004 ADA/Architectural Barriers Act (ABA) Accessibility Guidelines. 69 FR 44084. The Department issued Notices of Proposed Rulemaking (NPRMs) to revise the title II and title III regulations and these incorporated the 2004 ADA/ABA Accessibility Guidelines into the revised ADA Standards. 73 FR 34466

(June 17, 2008). The NPRMs addressed the issues raised in the comments to the ANPRM and sought additional comment.

The 2004 ANPRM asked for public comment on a range of issues not specifically addressed in the ADA regulations, including coverage of movable or portable equipment and furniture. 59 FR 58768. Although the Department received public comments in response to the ANPRM supporting its regulation of equipment and furniture, when the Department issued its 2008 NPRM, it announced its decision not to address equipment at that time. 73 FR 34466, 34474–75 (June 17, 2008). Instead, the Department continued its approach of requiring accessible equipment and furniture on a case-by-case basis. Under the regulatory provisions governing reasonable modifications of policies, practices, or procedures, program accessibility, effective communication, and barrier removal, the Department has continued its long-standing practice of requiring accessible equipment and furniture.

The Department received numerous comments urging it to issue equipment and furniture regulations. Based on these comments and for the reasons detailed below, the Department has decided to begin the process of soliciting comments and suggestions with respect to what an NPRM regarding equipment and furniture should contain.

B. Legal Foundation for Equipment and Furniture Coverage

The ADA prohibits discrimination on the basis of disability in all services, programs, and activities offered by public entities and in the operation of privately owned places of public accommodation. The provision of accessible equipment and furniture has always been required by the ADA and the Department's implementing regulations under the program accessibility, reasonable modification, auxiliary aids and services, and barrier removal requirements. Each of the types of equipment and furniture discussed in this ANPRM is subject to coverage under both title II and title III of the ADA.

Title II of the ADA applies to services, programs, or activities of public entities within the meaning of 42 U.S.C. 12133(1)(A). The program accessibility requirement of Title II mandates public entities to operate each service, program, or activity so that, when viewed in its entirety, the service, program, or activity is readily accessible to and usable by individuals with disabilities, subject to a defense of fundamental alteration or undue burden. 28 CFR 35.150(a). Section 35.150(b) specifies that such entities may meet their obligation to make each program accessible to individuals with disabilities through the "redesign of equipment." If an entity invokes a fundamental alteration defense, the entity nonetheless must take other steps that would not fundamentally alter the nature of the services provided. For example, the provision of a height adjustable examination table in a doctor's office may meet the requirement for program accessibility. However, if the provision of an adjustable examination table in a doctor's office would fundamentally alter the nature of the services provided, based on a fact specific inquiry, then the use instead of a nonadjustable examining table of suitable height, might afford an individual with a disability an equal opportunity to participate in the services, programs, and activities offered by that entity.

Title II entities also must ensure that communications with individuals with disabilities are as effective as communications with others and provide appropriate auxiliary aids and services where necessary to ensure that individuals with disabilities have an equal opportunity to participate in and benefit from a service, program, or activity. 28 CFR 35.160. These auxiliary aids include the "[a]cquisition or modification of equipment or devices." 28 CFR 35.104. In addition, equipment and personal property, such as furniture, is specifically included in the definition of "facility" in title II. 28 CFR 35.104. There is an identical definition of "facility" in the regulation implementing title III. 28 CFR 36.104.

Title III of the ADA applies to persons who own, lease or lease to, or operate places of public accommodation, such as doctors' offices, hospitals, nursing homes, hotels and motels, shopping centers, specified public transportation terminals, recreational facilities, such as health clubs or golf courses, restaurants, movie theaters, schools, and day care facilities. 42 U.S.C. 12182(a). Public accommodations discriminate against individuals with disabilities when they enact discriminatory policies or practices, or fail to remove barriers or make requested reasonable modifications in order to accommodate an individual's disability, unless barrier removal is not readily achievable or a modification would fundamentally alter the nature of the business. *See* 28 CFR 36.304 (barrier removal) and 36.302(a) (reasonable modification). If barrier removal is not readily achievable, then an alternative means must be provided if that alternative means is readily achievable. For example, a standard-height, nonadjustable examining table constitutes an architectural barrier to persons with certain mobility impairments. Therefore, an adjustable table must be provided if it is readily achievable. If it is not readily achievable to obtain such a table, then an alternative, such as a nonadjustable lower height table, must be provided if that alternative is readily achievable.

Public accommodations also must ensure that no individuals with disabilities are excluded, denied services, segregated or otherwise treated differently from other individuals because of the absence of auxiliary aids and services, unless taking such steps would fundamentally alter the nature of the goods, services, facilities, privileges, advantages, or accommodations being offered or result in an undue burden. 28 CFR 36.303(a). The preamble to the Department's 1991 regulation clarified the manner in which equipment and furniture are covered by the title III regulation. 28 CFR part 36, app. B, at 733 (Proposed Section 36.309 Purchase of Furniture and Equipment). Some types of equipment and furniture are covered specifically by the Department's adoption of the 1991 ADAAG as the ADA Standards for Accessible Design. Equipment and furniture may also be covered by other regulatory provisions including reasonable modifications, 28 CFR 36.302; auxiliary aids, 28 CFR 36.303; and barrier removal, 28 CFR 36.304.

While some types of fixed equipment and furniture are explicitly covered by the 1991 Standards, there are no specific provisions in the regulations governing the accessibility of equipment and furniture that are not fixed. *See* 28 CFR pt. 36, app. A. (Automatic Teller Machines (ATMs) and Fixed or Built-in Seating or Tables). A fixed item is something that is built into the facility, for example, through plumbing. In contrast, an item that is not fixed is not attached to the facility. In order to ensure that not only fixed equipment and furniture be accessible, the Department seeks to provide specific regulatory guidance for the accessibility of equipment and furniture that are not fixed. Whether a type of equipment or furniture is fixed or not is generally not relevant from the perspective of the user. For example, an ATM or vending machine that is fixed is used for the same purpose and in the same manner as an equivalent ATM or vending machine that is not fixed. To the extent that ADA standards apply requirements for fixed equipment and furniture, the Department will look to those standards

for guidance on accessibility standards for equipment and furniture that are not fixed.

With regard to making electronic or information technology equipment and furniture accessible to individuals with disabilities, including individuals who are blind or have low vision, Section 508 of the Rehabilitation Act of 1973, which applies to federal agencies, provides guidance for the public on how to make electronic and information technology accessible. *See, e.g.,* 29 U.S.C. 794d.

The Department's experience in the twenty years since the ADA was enacted has given it a better understanding of the barriers posed by inaccessible equipment and furniture and the solutions provided by accessible equipment and furniture. Accessible equipment and furniture is often critical to an entity's ability to provide a person with a disability equal access to its services. Changes in technology have resulted in the development and improved availability of accessible equipment and furniture that benefit individuals with disabilities. Use of the Internet, video interpreting services, screen readers, and text messaging, are just a few examples of technologies that were rare or nonexistent twenty years ago, but are now widely used by individuals with disabilities. New technologies have led to accessible equipment and furniture ranging from accessible medical exam tables for individuals who use wheelchairs to "talking" ATMs and interactive kiosks, which can be used independently and while preserving privacy through the use of headphones by individuals who are blind or have low vision. Consequently, it is easier now to specify appropriate accessibility standards for such equipment and furniture, as the Access Board has done for several types of fixed equipment and furniture, including ATMs, washing machines, dryers, tables, benches, and vending machines. See sections 903, 902, 707, 611, and 228 of the ADA/ABA Accessibility Guidelines.

For all of these reasons, the Department believes that providing specific requirements for accessible equipment and furniture is consistent with the mandates of the ADA and necessary and appropriate at this time.

V. Request for Public Comments

The Department seeks input from the public and from those in the disability community, representatives of Federal, State, or local governments, public safety organizations, and industry professionals. The Department invites comments on types and features of equipment and furniture that will effectively provide equal opportunity to access all services and programs covered by titles II and III of the ADA, on scoping (which refers to the amount of equipment or furniture that should be provided in different types of facilities in order to meet the needs of individuals with disabilities needing access to those facilities), on events or time frames that should trigger the replacement or modification of inaccessible equipment or furniture with accessible equipment or furniture, and on the costs and benefits of accessible equipment and furniture. In your responses to the questions presented below, please refer to each question by number. Please provide any additional information that you believe will be helpful.

A. Medical Equipment and Furniture

Without accessible medical examination tables, dental chairs, radiological diagnostic equipment, scales, and rehabilitation equipment, individuals with disabilities do not have an equal opportunity to receive medical care. Individuals with disabilities may be less likely to get routine preventative medical care than people without disabilities because of barriers to accessing that care. The Department has entered into settlement agreements with several medical care providers that have required the medical care provider to purchase accessible equipment and furniture for its facilities, including at least one accessible examination table in each medical department and additional accessible examination tables, radiologic equipment, scales, beds, and lifting devices, as needed. These settlement agreements are available to the public at *http://www.ada.gov.* The Department has also issued technical assistance on this issue. *See* Access to Medical Care for Individuals with Mobility Disabilities, on May 17, 2010.

The health care reform law, the Patient Protection and Affordable Care Act, added a new Section 510 to the Rehabilitation Act of 1973. Section 510 directs the Access Board to promulgate regulatory standards setting forth the minimum technical criteria for medical diagnostic equipment used in (or in conjunction with) physician's offices, clinics, emergency rooms, hospitals, and other medical settings. The standards shall ensure that such equipment is accessible to, and usable by, individuals with accessibility needs, and shall allow independent entry to, use of, and exit from the equipment or furniture by such individuals to the maximum extent possible. The Access Board has announced that it will draft new design standards for medical diagnostic equipment to satisfy this requirement. As an Access Board member, the Department will work closely with the Board in the development of these design standards. The Department will not issue a final rule on medical equipment until the Access Board has completed its medical diagnostic equipment standards. When the standards are completed, the Department will have the option to adopt them for ADA implementation and, if it does so, will, at that time, develop specific scoping requirements to establish the required number of accessible diagnostic elements for specific facility types. In addition, the Department may propose regulations to ensure the accessibility of medical equipment that is used for treatment, rehabilitative or other purposes.

i. Medical Examination and Treatment Tables and Chairs

Healthcare providers use examination and treatment tables and chairs for many different types of medical and dental examinations and treatments. Examples of specialty areas using examination or treatment tables or chairs include ophthalmology, optometry, podiatry, oncology, physical therapy, chiropractic, rehabilitation medicine, urology, and obstetrics and gynecology. If a person with a disability cannot get onto an examination table or chair and is thus not examined (as occurs, for example, with some women with disabilities who cannot access ob-gyn tables) or is examined in a wheelchair, any examination that does occur likely will be less thorough than it would have been on an examination table, and the medical provider may miss important medical information.

The Department has received complaints and learned in the course of its enforcement efforts that medical and dental examination tables and chairs often are too high to be accessible, lack stabilization elements, and do not have adequate clear floor space nearby to permit access. Although Section 510 of the Rehabilitation Act does not specifically address tables and chairs used solely for treatment purposes, the Department anticipates that such treatment equipment would be subject to similar accessibility requirements, such as adjustable heights.

ii. Accessible Scales

Medical providers often do not weigh individuals who use wheelchairs because they do not have an accessible scale, even though that information is a routine part of medical examinations and is important to the patient's health

and medical care. Patient weight can serve as a health indicator for many conditions, including depression, diabetes, cancer, cardiovascular disease, high blood pressure, and pregnancy. Correct patient weight is crucial to correctly prescribing medicine. Scales should be accessible to individuals who use wheelchairs or have other mobility disabilities that would impede the use of step-on scales.

Several different types of scales offer different means of accommodating patients with mobility disabilities while also affording flexibility to medical providers. Wheelchair scales are currently available as stand-alone devices or as equipment that is integrated into other medical equipment. Stand-alone wheelchair scales include wall-mounted stationary (folding or not folding), platform (in ground), and portable platform (folding or not folding).

iii. Radiological Diagnostic Equipment

Some types of radiological diagnostic equipment, such as Magnetic Resonance Imaging (MRI), Positron Emission Tomography (PET), and X-rays, including Computerized Axial Tomography (CAT) scans and mammography, are difficult to access for individuals with disabilities because of the height, shape, or configuration of the equipment. The Department has reached settlements with medical offices and hospitals providing diagnostic services because patients with mobility disabilities could not access medical diagnostic equipment. Some individuals with disabilities had difficulty transferring from wheelchairs onto scanning tables and were denied staff assistance or not provided access to medical equipment and furniture, such as gurneys or lifts, to facilitate the transfer to the diagnostic equipment and furniture. Different types of diagnostic equipment and furniture pose different challenges. For example, MRIs typically require individuals with disabilities to climb onto an MRI table and remain on the table while it is moved into and out of a scanning tube, a process that can take one to two hours. Mammograms may be inaccessible to individuals with mobility disabilities who cannot stand for the duration of the examination.

iv. Lifts

Medical providers may need lifts to transfer some patients with mobility disabilities safely to examination or treatment tables or chairs or to gurneys or hospital beds. The kind of assistance needed will depend on a patient's disability. Using lifts may provide more security for a patient than being lifted by medical staff and may reduce the risk of injury to medical staff. Concerns about lifting injuries have given rise to proposed legislation at the federal and state levels designed to increase safety for patients and medical staff. *See, e.g.,* Nurse and Health Care Worker Protection Act of 2009 (S. 1788); Recognizing the Need for Safe Patient Handling and Movement (H. Res. 510). There are several different types of patient lifts available now on the market, including free-standing, ceiling-mounted, and sling lifts. The use of lifts by medical and dental providers may improve accessibility to medical and dental examination and treatments.

v. Infusion Pumps

Infusion pumps infuse fluids such as chemotherapy drugs, pain medications, or nutrients into the circulatory system in a controlled manner. Several kinds of infusion pumps, including Patient Controlled Analgesia pumps, are available. Problems can arise with infusion pumps when there are errors in dosing rate or fluid volume. Infusion pumps often rely on patients controlling settings on difficult-to-reach buttons or flat screens that may not be accessible to individuals with disabilities. Integrated alarms may not be audible to individuals with hearing disabilities.

vi. Rehabilitation Equipment

Medical providers offering rehabilitative services must make those services equally available to individuals with disabilities. Rehabilitation and exercise equipment and furniture, including balance equipment, cardiopulmonary equipment, exercise pulleys and stretching equipment, resistance equipment, and general exercise equipment, should be available to individuals with disabilities requiring such rehabilitative treatment on an equal basis with other patients. For example, individuals with hearing impairments or blindness or low vision might require equipment or furniture to permit their full participation in cardiopulmonary rehabilitative services.

vii. Ancillary Equipment

Ancillary equipment is equipment used with other medical equipment, such as examination tables or chairs or MRIs, and adapted to or adjustable for use by individuals with disabilities. Ancillary equipment includes items such as positioning straps or cushions; protective padding; adjustable, padded leg supports for gynecological examinations; and additional supports, rails, or bars needed to ensure the safety and comfort of patients with disabilities. Sliding boards or sheets and gait belts may assist in transfers of patients with disabilities to and from examination or treatment tables and chairs. Individuals with mobility disabilities may require air mattresses and cushions, stools, or other pressure relief equipment to aid in the avoidance or treatment of pressure sores. Accessible call buttons and telephones can address communication difficulties for patients with mobility or other types of disabilities.

viii. Hospital Beds and Gurneys

Hospital beds and gurneys can be inaccessible to individuals with mobility disabilities. Medical care and long-term care facilities do not always provide accessible beds in the patient and resident sleeping rooms required to be accessible. In order to permit transfers by individuals with mobility disabilities, including those using wheelchairs, accessible height-adjustable beds would allow persons using wheelchairs and other mobility devices to transfer in and out of bed as independently as possible. Gurneys used to transport patients from place to place in a medical facility or used in certain diagnostic procedures may need to meet the same height requirements. Hospital bed control devices, for raising and lowering the bed and for other functions, as well as call buttons, also should be accessible to patients with disabilities.

ix. Medical Equipment Questions

To assist the Department to develop appropriate requirements for medical equipment and furniture, we are seeking information that will inform the rulemaking process. With respect to medical equipment, for each type of medical equipment it would be helpful to know details about the accessible features and if particular types of equipment with accessible features are currently available. The Department is seeking the following information:

Question 1. The Department is considering adopting the Access Board's standards for medical diagnostic equipment. What other types of medical equipment and furniture should the Department include in its proposed regulation? What modifications to other types of medical equipment and furniture, including equipment and furniture used for treatment or other non-diagnostic purposes, such as hospital beds, should be included in the Department's proposed regulations?

Question 2. The Access Board is expected to promulgate design standards for medical and dental diagnostic tables and chairs. Are there tables or chairs used for medical, dental, ophthalmology, or optometry

treatments, which are not typically used for diagnostic purposes, that would pose unique accessibility challenges? What modified features would make these tables or chairs accessible? What features would enhance patient stability and facilitate correct positioning?

Question 3. What types of lifts are the safest, most efficient, and most cost effective in transferring patients with disabilities in different medical or dental settings? Should the use of lifts or staff to lift patients be considered a substitute for providing independent access to medical equipment?

Question 4. If a hospital or medical provider uses staff to lift patients onto and off of medical equipment and furniture, should it be excused from the requirement of having lifts in any or all situations? What types of training programs are available to provide information to staff on lifting and transferring patients with disabilities? Are there any particular situations where lifting by staff should not be allowed?

Question 5. What features, such as low bed heights, can best enhance the accessibility of hospital beds and gurneys? Are these features available on products currently available?

Question 6. What technologies are currently available to increase the accessibility of infusion pumps? What types of infusion pumps are partially or fully operated by patients in the normal course of treatment?

Question 7. What are the greatest difficulties facing individuals with disabilities in accessing rehabilitative and exercise equipment and furniture in a therapeutic setting? What equipment and furniture most effectively permits accessibility for different types of rehabilitative needs? Can different types of equipment meet different access needs of, for example, people with low-vision who need access to visual displays on equipment? Are there differences between exercise equipment in therapeutic settings and exercise equipment in non-therapeutic settings (*e.g.,* gym or fitness center)? What exercise equipment or machines are available to meet the needs of individuals with mobility impairments?

Question 8. What types of ancillary equipment are most effective in different types of medical or dental examination or treatment settings?

Question 9. Is there a need for separate standards for bariatric medical equipment and furniture in the Department's equipment and furniture regulation? If so, what equipment and furniture are necessary to address the needs of patients with disabilities who are obese?

x. Scoping and Triggering Events for Medical Equipment and Furniture

If the Department proposes a rule recommending regulations requiring accessible medical equipment and furniture, it should provide guidance on the appropriate amount of different types of medical equipment and furniture that must be accessible. In making this determination, the Department might consider the size of a medical practice or the patient population and other factors. For example, in a doctor's office with two exam rooms, one accessible examination table might be a reasonable number of accessible examination tables. However, in a hospital with multiple medical departments, a reasonable number might include at least one accessible examination table in each department. Radiologic and other diagnostic equipment is highly specialized and a reasonable number of accessible diagnostic equipment in a radiology department might be one of each type of diagnostic equipment.

The Department is considering proposing that entities have eighteen months from the date of the publication of a rule to come into compliance with medical equipment and furniture requirements. The timeframes for replacing different types of medical equipment and furniture may vary widely. The very high cost of some radiological and diagnostic equipment, such as MRI machines and CAT scans, which often leads medical providers to lease rather than buy them, might require a later effective date.

Question 10. What are the key criteria for scoping in different types of medical settings? What are appropriate scoping requirements for each of the types of medical equipment and furniture discussed above?

Question 11. How could medical providers time replacement or modification of equipment and furniture to ensure that individuals with disabilities receive equal access to healthcare without undue delay? What types of triggering events are appropriate for different types of medical equipment and furniture? Should the Department require the purchase rather than the replacement of some accessible equipment and furniture at a certain point? Should the replacement of inaccessible medical equipment or furniture be triggered only by the end of the useful life of the equipment or furniture?

B. Exercise Equipment and Furniture

Individuals with disabilities have expressed concerns over the years about an inability to use exercise equipment and furniture in health clubs, hotel fitness centers, public recreation centers, public elementary, secondary, and postsecondary institutions, and other establishments that offer exercise facilities. The 1991 Standards contained no scoping or technical requirements relating to exercise facilities. The Department may propose additional regulations to enhance the accessibility and usability of exercise equipment by individuals with disabilities.

Question 12. What types of accessible exercise equipment and furniture are available on the commercial market? What types of equipment and furniture are already accessible to individuals with disabilities? Is independently operable equipment and furniture available for individuals who are blind or who have low vision, or who have manual dexterity issues.

Question 13. Should the Department require covered entities to provide accessible exercise equipment and furniture ? How much of each type of equipment and furniture should be provided? Should the requirements for accessible equipment and furniture be the same for small and large exercise facilities, and if not, how should they differ?

C. Accessible Golf Cars

The Department is considering issuing regulations specific to golf cars and may propose requiring golf courses that provide golf cars, when replacing or acquiring additional standard golf cars, to provide accessible golf cars for use by individuals with disabilities.

An accessible golf car means a device that is designed and manufactured to be driven on all areas of a golf course, is independently usable by individuals with mobility disabilities, has a hand operated brake and accelerator, carries golf clubs in an accessible location, and has a seat that both swivels and rises to put the golfer in a standing or semi-standing position. The 1991 regulation contained no language specifically referencing accessible golf cars. Although the 2004 ANPRM raised the possibility of requiring that golf courses make at least one specialized golf car available for the use of individuals with disabilities, the Department stated in the 2008 NPRM that it was not going to propose a specific requirement at that time. The Department of Defense has required the use of single-rider accessible golf cars in federally-owned golf courses pursuant to Section 664 of the John Warner National Defense Authorization Act for Fiscal Year 2007 (Pub. L. 109–364).

Question 14. What is the most effective means of addressing the needs of golfers with mobility disabilities? Are golf cars currently available that are readily adaptable for the addition of hand controls and swivel seats? If so, are those cars suitable for driving on greens? To what extent are accessible golf cars of all types stable, lightweight, and moderately priced?

Question 15. What are appropriate scoping requirements for accessible golf cars? Should the criteria used to determine scoping stem from factors including the number of golf course patrons, the number of golfing holes (*e.g.* nine, 18, or 27) at the facility, the number of inaccessible golf cars in use, or other criteria? Should each 18-hole course be required to provide a certain number of accessible golf cars?

D. Beds in Accessible Guest Rooms and Sleeping Rooms

The Department is considering regulating the accessibility of beds in accessible guest rooms and sleeping rooms, such as dormitories in educational institutions and social service establishments. Many individuals with disabilities have urged the Department to regulate the height of beds, particularly in accessible hotel guest rooms, and to require that such beds have clearance under the bed to accommodate a mechanical lift. In recent years, hotels have provided higher beds, using thicker mattresses that make it difficult or impossible for many individuals who use wheelchairs to transfer onto the beds. Some of these mattresses have pillow tops that raise the height of the bed by several inches and then, once the individual has transferred to it, compress and reduce the height of the bed. Thus, a bed with a pillow top that is low enough to transfer to from a wheelchair may be too low, once it is compressed, to transfer safely back to the wheelchair. In addition, many hotel beds use a solid-sided platform base for beds with no clearance underneath, which prevents the use of a portable lift to transfer an individual onto the bed.

Question 16. Should the Department develop a general standard that specifies requirements for beds wherever accessible sleeping accommodations are required? What are appropriate bed heights to ensure accessibility by individuals with mobility disabilities and should there be requirements for mattresses to ensure that the height of the mattress, even when compressed by the weight of a person sitting or laying down on it, remains within a certain range? Are there existing standards that the Department should look to for developing standards for beds in accessible rooms? What is the optimal clearance needed under a bed to accommodate a mechanical lift? Should any such requirements apply to all accessible guestrooms or sleeping rooms or only to a percentage of them? What time line should the Department establish for requiring accessible beds in accessible guest rooms and sleeping rooms and should such a time line be phased in?

E. Beds in Nursing Homes and Other Care Facilities

Nursing homes, assisted living facilities, and other care facilities may have beds that are too high or too low, which can be a problem for individuals with disabilities. In addition, many of these beds have electronic controls and switches that may not be accessible for individuals with mobility, dexterity, or visual or auditory disabilities. The Department may propose regulations to ensure the accessibility of beds in nursing homes and other care facilities.

Question 17. Should the standards be different for adjustable beds, such as hospital beds, and for fixed height beds? Should the Department treat beds in nursing homes in the same manner as beds in hospitals? Should the Department treat beds in nursing homes or hospitals in the same manner as it treats beds in places of lodging? Should all accessible rooms have adjustable beds?

F. Electronic and Information Technology

The Department believes that it is important for individuals with disabilities to have an equal opportunity to use electronic and information technology (EIT) equipment and furniture, such as kiosks, interactive transaction machines (ITMs), point-of-sale (POS) devices, and automated teller machines (ATMs). Individuals with disabilities who engage in financial or other transactions should be able to do so independently and not have to provide third parties with private financial information, such as a personal identification number (PIN). Equipment and furniture are covered for both physical access and effective communication.

Among the available equipment and furniture that use EIT are kiosks, which are interactive computer terminals that provide a wide range of services, including information sharing, ticketing, airline check-in, Internet access, movie ticket sales and DVD rentals, security screening, bill paying, and photo developing. ITMs include POS devices, such as credit card payment terminals, retail store self-checkout stations, machines used for ordering food at quick service restaurants, and gas station pay-at-the-pump systems. The number of POS machines used by businesses and state and local programs and activities (such as at student unions at state colleges and universities) nationwide continues to increase, as does the range of transactions handled by these machines. With the advent of touch screen technology, customers are now required to enter data using a flat screen while reading changing visual information and instructions. Persons who cannot see the flat screen must rely on other people to input their information, including their personal identification numbers (PINs). At least one state (California) already requires all check-out locations with a flat screen POS device to have a permanently attached tactile keypad that is usable by individuals with visual disabilities. Cal. Fin. Code 13082 (West 2006). While some POS devices are mounted at a height that fits within current reach range guidelines, the Department is aware that the fixed upward orientation of some of these devices can impede their accessibility by making it difficult for a person with a mobility disability to view the screen, enter a PIN, or sign an authorization.

The Department's preamble to its 1991 regulations explained that, "[g]iven that § 36.304's focus is on the removal of physical barriers, the Department believes that the obligation to provide communications equipment and devices * * * is more appropriately determined by the requirements for auxiliary aids and services under § 36.303." 56 FR 35544, 35568. The 1991 Standards contained requirements for physical accessibility for ATMs and also required that "[i]nstructions and all information for use shall be made accessible to and independently usable by persons with vision impairments." 28 CFR part 36, app A, section 4.34.5. The Department has traditionally taken the position that the communication-related elements of ATMs are auxiliary aids and services, and are not physical elements. On March 22, 2010, the Access Board published an ANPRM seeking public comment on its plans to amend the 2004 ADA/ABA Accessibility Guidelines to include technical guidelines for self-service machines used for ticketing, check-in or check-out, seat selection, boarding passes, or ordering food in restaurants and cafeterias. *See* 75 FR 13457. In the ANPRM, the Access Board noted the proliferation of inaccessible POS machines, kiosks, and other self-service machines and referenced ADA

litigation against various public accommodations over the past ten years that has resulted in numerous settlement agreements and structured negotiations requiring the installation of tactile POS devices.

Question 18. What are the challenges posed by the inaccessibility of EIT, including EIT kiosks, POS devices, and ITMs? Are there issues regarding other uses of EIT that the Department should consider adopting to ensure that EIT equipment is accessible?

i. EIT for Effective Communication in Accessible Rooms

The Department's title III regulation, 28 CFR 36.303(d)(1) requires places of public accommodation that provide customers, patients, or clients the opportunity to make outgoing telephone calls on more than an incidental convenience basis to make TTYs available for the use of customers, patients, or clients who have communication disabilities. It has been suggested that the Department should expand the coverage of this section to require covered entities to provide recognize that there are a wide range of devices now used as communication aids by individuals with disabilities. Therefore, the Department seeks comments regarding the incorporation of EIT into this requirement as it applies to accessible sleeping rooms in facilities such as hospitals, nursing homes, hotels, or other places of lodging to permit effective communication by individuals with disabilities, including those who are deaf or hard of hearing.

New technologies have emerged that permit the use of EIT for effective communication. As telecommunication technologies are developing, persons with disabilities are transitioning from analog or legacy devices to digital telecommunication devices. Among these devices are video phones (including web cam), text messaging pagers and computers, and captioned telephones. Video relay services (VRS) permit individuals who use sign language for communication to use a video remote interpreting service (VRI). The relay services are under the jurisdiction of the Federal Communications Commission. Text communications can be divided into two types: Real time, and non-real time. Real-time text communications refer to those that are sent and received on a character-by-character basis; the characters are sent immediately once typed and also displayed immediately to the receiving person. Non-real time communications rely on messaging capabilities where users "type-enter-wait-read-respond-reply"—*e.g.,* short messages service (SMS) texts, multimedia messaging service (MMS), instant messaging (IM), text chat, and e-mail.

Question 19. What types of EIT would permit individuals with communication disabilities to most effectively communicate from an accessible hospital room, nursing home facility, guest or sleeping room? Should the Department regulate effective communication from such facilities? What are the costs associated with various types of EIT in such settings?

ii. Scoping and Triggering Events for EIT Equipment

The Department is considering possible criteria for establishing scoping and triggering events for EIT devices and for particular features of such devices, such as tactile controls or voice output. Such criteria might include the total number of EIT devices in a certain facility.

Question 20. What are appropriate scoping criteria for the availability of accessible EIT and triggering events for the replacement or refurbishing of EIT devices, including kiosks, ITMs and ATMs, to ensure accessibility?

G. Other Types of Equipment and Furniture

Different types of equipment and furniture can pose challenging accessibility problems or can serve as remedies to those problems. The Department welcomes public input on other types of equipment and furniture that warrant attention. For example, the Department is aware that equipment and furniture exists that may provide ready access for individuals with disabilities, including pool chairs that permit individuals who use wheelchairs to enter a pool with a sloped entrance without submerging their personal wheelchair and shower chairs for accessible hotel rooms with roll-in showers. The Department has learned that access to computer terminals in public libraries, which allow members of the public to access the Internet, often lack accessibility features (such as screen readers) and are in inaccessible locations. Another concern is access to television in hotels, hospitals, nursing homes, and other care facilities when certain television sets do not provide a way for consumers to turn closed captions on and off.

Question 21. Are there other types of equipment or furniture that impede accessibility that should be specifically addressed in the Department's regulation? What types of accessible equipment or furniture would effectively address any such concerns? What scoping would adequately address the impediments to accessibility and what triggering event would be appropriate for each type of other equipment or furniture? Are there particularly helpful types of equipment or furniture that are not generally available to the public that may assist individuals with disabilities, such as pool or shower chairs?

VI. Regulatory Process Matters (SBREFA, Regulatory Flexibility Act, Executive Orders, Benefits and Costs)

Since this proposal is an ANPRM, the Department is not required to conduct certain economic analyses or written assessments that otherwise may be required for more formal types of agency regulatory actions (*e.g.,* notices of proposed rulemaking or final rules) that are deemed to be economically significant regulatory actions with an annual economic impact of $100 million or more or that are expected to have a significant economic effect on a substantial number of small entities or non-federal governmental jurisdictions (such as State, local, or tribal governments). *See, e.g.,* Regulatory Flexibility Act of 1980, 5 U.S.C. 603–04 (2006); E.O. 13272, 67 FR 53461 (Aug. 13, 2002); E.O. 12866, 58 FR 51735 (Sept. 30, 1993), as amended by E.O. 13497, 74 FR 6113 (Jan. 30, 2009); OMB Budget Circular A–4, *http://www.whitehouse.gov/OMB/circulars/a004/a-4.pdf* (last visited June 25, 2010).

One of the purposes of this ANPRM is to seek public comment from members of the disability community, public accommodations, and governmental entities on various topics relating to accessible equipment and furniture, including perspectives from stakeholders concerning the benefits and costs of revising the Department's titles II and III regulations to ensure the accessibility of equipment and furniture.

Question 22. Do commenters have information available that can aid the Department in identifying existing accessible equipment and furniture? What are the costs of accessible equipment and furniture and how do these costs differ from the costs of inaccessible equipment and furniture? What are the normal replacement schedules for each of the types of equipment and furniture discussed in this ANPRM or other types proposed for coverage? What are the costs and benefits of different scoping requirements for different types of equipment and furniture? What are reasonable less costly or burdensome regulatory alternatives that would still achieve the objectives of the proposed

rules? What are the costs and benefits, both quantitatively and qualitatively, of providing individuals with disabilities an equal opportunity to access health care, recreational facilities, exercise equipment, furniture in hotels, nursing homes, and hospitals, and electronic information and transactions? The Department seeks specific cost information, including information on the costs and benefits, as well as anecdotal evidence of the costs and benefits of accessible equipment and furniture.

A. Impact on Small Entities

Consistent with the Regulatory Flexibility Act of 1980 and Executive Order 13272, the Department must consider the impacts of any proposed rule on small entities, including small businesses, small nonprofit organizations, and small governmental jurisdictions. See 5 U.S.C. 603–04 (2006); E.O. 13272, 67 FR 53461 (Aug. 13, 2002). The Department will make an initial determination as to whether any rule it proposes is likely to have a significant economic impact on a substantial number of small entities, and if so, the Department will prepare an initial regulatory flexibility analysis analyzing the economic impacts on small entities and regulatory alternatives that reduce the regulatory burden on small entities while achieving the goals of the regulation. In response to this ANPRM, the Department encourages small entities to provide cost data on the potential economic impact of adopting a specific requirement for Web site accessibility and recommendations on less burdensome alternatives, with cost information.

Question 23. The Department seeks input regarding the impact the measures being contemplated by the Department with regard to accessible equipment and furniture will have on small entities if adopted by the Department. The Department encourages you to include any cost data on the potential economic impact on small entities with your response.

Question 24. Are there alternatives that the Department can adopt, which were not previously discussed, that will alleviate the burden on small entities? Should there be different compliance requirements or timetables for small entities that take into account the resources available to small entities or should the Department adopt an exemption for certain or all small entities from coverage of the rule, in whole or in part. Please provide as much detail as possible in your response.

Dated: July 21, 2010.

Thomas E. Perez,

Assistant Attorney General, Civil Rights Division.

[FR Doc. 2010–18331 Filed 7–22–10; 4:15 pm]

BILLING CODE 4410–13–P

DEPARTMENT OF JUSTICE

28 CFR Parts 35 and 36

[CRT Docket No. 110]

RIN 1190–AA61

Nondiscrimination on the Basis of Disability; Accessibility of Web Information and Services of State and Local Government Entities and Public Accommodations

AGENCY: Department of Justice, Civil Rights Division.

ACTION: Advance Notice of Proposed Rulemaking.

SUMMARY: The Department of Justice (Department) is considering revising the regulations implementing title III of the Americans with Disabilities Act (ADA or Act) in order to establish requirements for making the goods, services, facilities, privileges, accommodations, or advantages offered by public accommodations via the Internet, specifically at sites on the World Wide Web (Web), accessible to individuals with disabilities. The Department is also considering revising the ADA's title II regulation to establish requirements for making the services, programs, or activities offered by State and local governments to the public via the Web accessible. The Department is issuing this advance notice of proposed rulemaking (ANPRM) in order to solicit public comment on various issues relating to the potential application of such requirements and to obtain background information for the regulatory assessment the Department must prepare if it were to adopt requirements that are economically significant according to Executive Order 12866.

DATES: The Department invites written comments from members of the public. Written comments must be postmarked and electronic comments must be submitted on or before January 24, 2011. Commenters should be aware that the electronic Federal Docket Management System will not accept comments after Midnight Eastern Time on the last day of the comment period.

ADDRESSES: You may submit comments, identified by RIN 1190–AA61 (or Docket ID No. 110), by any one of the following methods:

- *Federal eRulemaking Web site: www.regulations.gov.* Follow the Web site's instructions for submitting comments.
- *Regular U.S. mail:* Disability Rights Section, Civil Rights Division, U.S. Department of Justice, P.O. Box 2885, Fairfax, VA 22031–0885.
- *Overnight, courier, or hand delivery:* Disability Rights Section, Civil Rights Division, U.S. Department of Justice, 1425 New York Avenue, NW., Suite 4039, Washington, DC 20005.

FOR FURTHER INFORMATION CONTACT: Christina Galindo-Walsh, Attorney, Disability Rights Section, Civil Rights Division, U.S. Department of Justice, at (202) 307–0663 (voice or TTY). This is not a toll free number. Information may also be obtained from the Department's toll-free ADA Information Line at (800) 514–0301 (voice) or (800) 514–0383 (TTY).

You may obtain copies of this ANPRM in large print, audiotape, Braille, or computer disk by calling the ADA Information Line at (800) 514–0301 (voice) or (800) 514–0383 (TTY). This ANPRM is also available on the ADA Home Page at *http://www.ada.gov.*

SUPPLEMENTARY INFORMATION:

I. Electronic Submission of Comments and Posting of Public Comments

You may submit electronic comments to *www.regulations.gov.* When submitting comments electronically, you must include CRT Docket No. 110 in the subject box, and you must include your full name and address. Electronic files should avoid the use of special characters or any form of encryption and should be free of any defects or viruses.

Please note that all comments received are considered part of the public record and made available for public inspection online at *www.regulations.gov.* Submission postings will include any personal identifying information (such as your name, address, etc.) included in the text of your comment. If you include personal identifying information (such as your name, address, etc.) in the text of your comment but do not want it to be posted online, you must include the phrase "PERSONAL IDENTIFYING INFORMATION" in the first paragraph of your comment. You must also include all the personal identifying information you want redacted along with this phrase. Similarly, if you submit confidential business information as part of your comment but do not want it posted online, you must include the phrase "CONFIDENTIAL BUSINESS INFORMATION" in the first

paragraph of your comment. You must also prominently identify confidential business information to be redacted within the comment. If a comment has so much confidential business information that it cannot be effectively redacted, all or part of that comment may not be posted on *www.regulations.gov.*

Comments on this ANPRM will also be made available for public viewing by appointment at the Disability Rights Section, located at 1425 New York Avenue, NW., Suite 4039, Washington, DC 20005, during normal business hours. To arrange an appointment to review the comments, please contact the ADA Information Line at (800) 514–0301 (voice) or (800) 514–0383 (TTY).

The reason that the Civil Rights Division is requesting electronic comments before Midnight Eastern Time on the day the comment period closes is because the inter-agency Regulations.gov/Federal Docket Management System (FDMS), which receives electronic comments terminates the public's ability to submit comments at Midnight on the day the comment period closes. Commenters in time zones other than Eastern may want to take this fact into account so that their electronic comments can be received. The constraints imposed by the Regulations.gov/FDMS system do not apply to U.S. postal comments, which will be considered as timely filed if they are postmarked before Midnight on the day the comment period closes.

II. Public Hearing

The Department will hold a hearing to solicit comments on the issues presented in this notice. The Department plans to hold the public hearing during the 180-day public comment period. The date, time, and location of the public hearing will be announced to the public in the **Federal Register**.

III. Background

A. Statutory and Rulemaking History

On July 26, 1990, President George H.W. Bush signed into law the ADA, a comprehensive civil rights law prohibiting discrimination on the basis of disability. The ADA broadly protects the rights of individuals with disabilities in employment, access to State and local government services, places of public accommodation, transportation, and other important areas of American life. The ADA also requires newly designed and constructed or altered State and local government facilities, public accommodations, and commercial facilities to be readily accessible to and usable by individuals with disabilities. 42 U.S.C. 12101 *et seq.* Section 204 (a) of title II and section 306(b) of title III direct the Attorney General to promulgate regulations to carry out the provisions of titles II and III, other than certain provisions dealing specifically with transportation. 42 U.S.C. 12134; 42 U.S.C. 12186(b).

Title II applies to State and local government entities, and, in Subtitle A, protects qualified individuals with disabilities from discrimination on the basis of disability in services, programs, and activities provided by State and local government entities. Title II extends the prohibition on discrimination established by section 504 of the Rehabilitation Act of 1973, as amended, 29 U.S.C. 794 (section 504), to all activities of State and local governments regardless of whether these entities receive Federal financial assistance. 42 U.S.C. 12131–65.

Title III prohibits discrimination on the basis of disability in the activities of places of public accommodation (private entities whose operations affect commerce and that fall into one of 12 categories listed in the ADA, such as restaurants, movie theaters, schools, day care facilities, recreational facilities, and doctors' offices) and requires newly constructed or altered places of public accommodation—as well as commercial facilities (privately owned, nonresidential facilities such as factories, warehouses, or office buildings)—to comply with the ADA Standards. 42 U.S.C. 12181–89.

On July 26, 1991, the Department issued its final rules implementing title II and title III, which are codified at 28 CFR part 35 (Title II) and part 36 (Title III). Appendix A of the title III regulation, at 28 CFR part 36, app. A, contains the ADA Standards for Accessible Design. On September 30, 2004, the Department published an advance notice of proposed rulemaking (2004 ANPRM) to begin the process of updating the 1991 regulations to adopt revised ADA Standards based on the relevant parts of the 2004 ADA/ABA Guidelines. 69 FR 58768. On June 17, 2008, the Department issued a notice of proposed rulemaking (NPRM) to adopt the revised 2004 ADA Standards and revise the title II and title III regulations. 73 FR 34466. The NPRM addressed the issues raised in the public's comments to the ANPRM and sought additional comment. Although the Department did not propose to include Web accessibility provisions in the 2004 ANPRM or the 2008 NPRM, the Department received numerous comments urging the Department to issue Web accessibility regulations under the ADA. Based on these comments and the reasons detailed below, the Department has decided to begin the process of soliciting comments and suggestions with respect to what an NPRM regarding Web access should contain.

B. Legal Foundation for Web Accessibility

When the ADA was enacted in 1990, the Internet as we know it today—the ubiquitous infrastructure for information and commerce—did not exist. Today the Internet, most notably the sites of the Web, plays a critical role in the daily personal, professional, civic, and business life of Americans. Increasingly, private entities are providing goods and services to the public through Web sites that operate as places of public accommodation under title III of the ADA. Similarly, many public entities under title II are using Web sites to provide the public access to their programs, services, and activities. Many Web sites of public accommodations and governmental entities, however, render use by individuals with disabilities difficult or impossible due to barriers posed by Web sites designed without accessible features.

Being unable to access Web sites puts individuals at a great disadvantage in today's society, which is driven by a dynamic electronic marketplace and unprecedented access to information. On the economic front, electronic commerce, or "e-commerce," often offers consumers a wider selection and lower prices than traditional, "brick-and-mortar" storefronts, with the added convenience of not having to leave one's home to obtain goods and services. For individuals with disabilities who experience barriers to their ability to travel or to leave their homes, the Internet may be their only way to access certain goods and services.

Beyond goods and services, information available on the Internet has become a gateway to education. Schools at all levels are increasingly offering programs and classroom instruction through Web sites. Many colleges and universities offer degree programs online; some universities exist exclusively on the Internet. Even if they do not offer degree programs online, most colleges and universities today rely on Web sites and other Internet-related technologies in the application process for prospective students, for housing eligibility and on-campus living assignments, course registration, assignments and discussion groups, and for a wide variety of administrative and logistical functions in which students

and staff must participate. Similarly, in the elementary- and secondary-school settings, communications via the Internet are increasingly becoming the way teachers and administrators communicate grades, assignments, and administrative matters to parents and students.

The Internet is also dramatically changing the way that governmental entities serve the public. Public entities are increasingly providing their constituents access to government services and programs through their Web sites. Through government Web sites, the public can obtain information or correspond with local officials without having to wait in line or be placed on hold. They can also pay fines, apply for benefits, renew State-issued identification, register to vote, file taxes, request copies of vital records, and complete numerous other everyday tasks. The availability of these services and information online not only makes life easier for the public, but also enables governmental entities to operate more efficiently and at a lower cost.

The Internet also is changing the way individuals socialize and seek entertainment. Social networks and other online meeting places provide a unique way for individuals to meet and fraternize. These networks allow individuals to meet others with similar interests and connect with friends, business colleagues, elected officials, and businesses. They also provide an effective networking opportunity for entrepreneurs, artists, and others seeking to put their skills and talents to use. Web sites also bring a myriad of entertainment and information options for Internet users—from games and music to news and videos. With the Internet, individuals can find countless ways to entertain themselves without ever leaving home.

More and more, individuals are also turning to the Internet to obtain healthcare information. Individuals use the Internet to research diagnoses they have received or symptoms that they are experiencing. There are a myriad of Web sites that provide information about causes, risk factors, complications, tests, and diagnoses, treatment and drugs, prevention, and alternative therapies for just about any disease or illness. Moreover, healthcare and insurance providers are increasingly offering patients the ability to access their healthcare records electronically via Web sites. As use of the Internet to provide and obtain healthcare information increases, the inability of individuals with disabilities to also access this information can potentially have a significant adverse effect on their health.

The ADA's promise to provide an equal opportunity for individuals with disabilities to participate in and benefit from all aspects of American civic and economic life will be achieved in today's technologically advanced society only if it is clear to State and local governments, businesses, educators, and other public accommodations that their Web sites must be accessible. Consequently, the Department is considering amending its title II and title III regulations to require public entities and public accommodations that provide products or services to the public through Web sites on the Internet to make their sites accessible to and usable by individuals with disabilities under the legal framework established by the ADA.

i. Barriers to Web Accessibility

Millions of individuals in the United States have disabilities that affect their use of the Web. Many of these individuals use assistive technology to enable them to navigate Web sites or access information contained on those sites. For example, individuals who do not have use of their hands may use speech recognition software to navigate a Web site, while individuals who are blind may rely on a screen reader to convert the visual information on a Web site into speech. Many Web sites fail to incorporate or activate features that enable users with disabilities to access all the site's information or elements. For instance, individuals who are deaf are unable to access information in Web videos and other multimedia presentations that do not have captions. Individuals with low vision may be unable to read Web sites that do not allow the font size or the color contrast of the site's page to be modified. Individuals with limited manual dexterity who may use assistive technology that enables them to interact with Web sites cannot access sites that do not support keyboard alternatives for mouse commands. These same individuals, along with individuals with intellectual and vision disabilities, often encounter difficulty using portions of Web sites that require timed responses from users but do not give users the ability to indicate that they need more time to respond.

Individuals who are blind or have low vision often confront significant barriers to Web access. This is because many Web sites provide information visually without features that allow screen readers or other assistive technology to retrieve information on the site so it can be presented in an accessible manner. The most common barrier to Web site accessibility is an image or photograph without corresponding text describing the image. A screen reader or similar assistive technology cannot "read" an image, leaving individuals who are blind with no way of independently knowing what information the image conveys (*e.g.,* a simple graphic or a link to another page). Similarly, complex Web sites often lack navigational headings or links that would facilitate navigation using a screen reader or may contain tables with header and row identifiers that display data, but fail to provide associated cells for each header and row so that the table information can be interpreted by a screen reader.

Online forms, which are an essential part of accessing goods and services on many Web sites, are often inaccessible to individuals with disabilities. For example, field elements on forms—the empty boxes that hold specific pieces of information, such as a last name or telephone number—that lack clear labels, and visual CAPTCHAs ("Completely Automated Public Turing Test To Tell Computers and Humans Apart")—distorted text that must be inputted by a Web site user to verify that a Web submission is being completed by a human rather than a computer—make it difficult for persons using screen readers to make purchases, submit donations, and otherwise interact with a Web site. These barriers greatly impede the ability of individuals with disabilities to fully enjoy the goods, services, and programs offered by covered entities on the Web.

In most instances, removing these and other Web site barriers is neither difficult nor especially costly, and in most cases providing accessibility will not result in changes to the format or appearance of a site. The addition of invisible attributes known as alt (alternate) text or tags to an image will help keep an individual using a screen reader oriented and allow him or her to gain access to the information on the Web site. Associating form labels to form input fields and locating form labels adjacent to form input fields will allow an individual using a screen reader to access the information and form elements necessary to complete and submit a form on the Web site. Moreover, Web designers can easily add headings, which facilitate page navigation using a screen reader, to their Web pages. They can also add cues to ensure the proper functioning of keyboard commands and set up their programs to respond to assistive technology, such as voice recognition technology.

ii. Web Accessibility Under the ADA

The Internet as it is known today did not exist when Congress enacted the ADA and, therefore, neither the ADA nor the regulations the Department promulgated under the ADA specifically address access to Web sites. But the statute's broad and expansive nondiscrimination mandate reaches goods and services provided by covered entities on Web sites over the Internet. Title III of the ADA provides that "[n]o individual shall be discriminated against on the basis of disability in the full and equal enjoyment of the goods, services, facilities, privileges, advantages, or accommodations of any place of public accommodation by any person who owns, leases (or leases to), or operates a place of public accommodation." 42 U.S.C. 12182(a). Title III of the ADA and its corresponding regulations define a "place of public accommodation" as a facility whose operations affect commerce and that falls within at least one of the following 12 categories:

(1) An inn, hotel, motel, or other place of lodging, except for an establishment located within a building that contains not more than five rooms for rent or hire and that is actually occupied by the proprietor of the establishment as the residence of the proprietor;

(2) A restaurant, bar, or other establishment serving food or drink;

(3) A motion picture house, theater, concert hall, stadium, or other place of exhibition or entertainment;

(4) An auditorium, convention center, lecture hall, or other place of public gathering;

(5) A bakery, grocery store, clothing store, hardware store, shopping center, or other sales or rental establishment;

(6) A laundromat, dry-cleaner, bank, barber shop, beauty shop, travel service, shoe repair service, funeral parlor, gas station, office of an accountant or lawyer, pharmacy, insurance office, professional office of a health care provider, hospital, or other service establishment;

(7) A terminal, depot, or other station used for specified public transportation;

(8) A museum, library, gallery, or other place of public display or collection;

(9) A park, zoo, amusement park, or other place of recreation;

(10) A nursery, elementary, secondary, undergraduate, or postgraduate private school, or other place of education;

(11) A day care center, senior citizen center, homeless shelter, food bank, adoption agency, or other social service center establishment; and

(12) A gymnasium, health spa, bowling alley, golf course, or other place of exercise or recreation.

42 U.S.C. 12181(7); 28 CFR 36.104. Congress contemplated that the Department would apply the statute in a manner that evolved over time, and it delegated authority to the Attorney General to promulgate regulations to carry out the Act's broad mandate. *See* H.R. Rep. No. 101–485(II), 101st Cong., 2d Sess. 108 (1990); 42 U.S.C. 12186(b). Consistent with this approach, the Department stated in the preamble to the original 1991 ADA regulations that the regulations should be interpreted to keep pace with developing technologies. 28 CFR part 36, app. B.

Section 12182 of title III provides that no person "who owns, leases (or leases to), or operates a place of public accommodation" may discriminate "on the basis of disability in the full and equal enjoyment of the goods, services, facilities, privileges, advantages, or accommodations *of* any place of public accommodation." 42 U.S.C. 12182(a) (emphasis added). Similarly, title II provides that qualified individuals with disabilities shall not be excluded from "participation in or be denied the benefits of the services, programs, or activities *of* a public entity." 42 U.S.C. 12132 (emphasis added). The plain language of these statutory provisions applies to discrimination in offering the goods and services "of" a place of public accommodation or the services, programs, and activities "of" a public entity, rather than being limited to those goods and services provided "at" or "in" a place of public accommodation or facility of a public entity. *See National Federation of the Blind* v. *Target Corp.,* 452 F. Supp. 2d 946, 953 (N.D. Cal. 2006) (finding in a Web site-access case that "[t]o limit the ADA to discrimination in the provision of services occurring on the premises of a public accommodation would contradict the plain language of the statute"); *Rendon* v. *Valleycrest Productions, Ltd.,* 294 F.3d 1279 (11th Cir. 2002) (finding that discrimination did not have to occur on-site in order to violate the ADA); *see also Carparts Distribution Ctr.,* 37 F.3d 12 (concluding that title III is not limited to provision of goods and services provided in physical structures, but also covers access to goods and services offered by a place of public accommodation through other mediums, such as telephone or mail). *But see Access Now, Inc.* v. *Southwest Airlines, Co.,* 227 F. Supp. 2d 1312 (S.D. Fla. 2002) (finding a Web site is only covered if it affects access to a physical place of public accommodation); *See Weyer* v. *Twentieth Century Fox Film Corp.,* 198 F.3d 1104, 1114–16 (9th Cir. 2000) (requiring some connection between the goods or services complained of and an actual physical place); *Ford* v. *Schering-Plough Corp.,* 145 F.3d 601, 612–13 (3d Cir. 1998) (finding no nexus between challenged insurance policy and services offered to the public from insurance office). Instead, the ADA mandate for "full and equal enjoyment" requires nondiscrimination by a place of public accommodation in the offering of *all* its goods and services, including those offered via Web sites.

iii. Need for Department Action

The Internet has been governed by a variety of voluntary standards or structures developed through nonprofit organizations using multinational collaborative efforts. For example, domain names are issued and administered through the Internet Corporation for Assigned Names and Numbers (ICANN), the Internet Society (ISOC) publishes computer security policies and procedures for sites, and the World Wide Web Consortium (W3C®) develops a variety of technical standards and guidelines ranging from issues related to mobile devices and privacy to internationalization of technology. In the area of accessibility, the Web Accessibility Initiative (WAI) of the W3C® has created the Web Content Accessibility Guidelines (WCAG).

It has been the policy of the United States to encourage self-regulation with regard to the Internet wherever possible and to regulate only where self-regulation is insufficient and government involvement may be necessary. *See Memorandum on Electronic Commerce,* 33 WCPD 1006, 1006–1010 (July 1, 1997), available at *http://www.gpo.gov/fdsys/pkg/WCPD-1997-07-07/html/WCPD-1997-07-07-Pg1006-2.htm* (last visited June 29, 2010); *A Framework for Global Electronic Commerce, http://clinton4.nara.gov/WH/New/Commerce* (last visited June 29, 2010).

Voluntary standards have generally proved to be sufficient where obvious business incentives align with discretionary governing standards as, for example, with respect to privacy and security standards designed to increase consumer confidence in e-commerce. There has not, however, been equal success in the area of accessibility. The WAI leadership has recognized this challenge and has stated that in order to improve and accelerate Web accessibility it is important to "communicat[e] the applicability of the ADA to the Web more clearly, with updated guidance * * * ." *Achieving the Promise of the Americans with Disabilities Act in the Digital Age—Current Issues, Challenges, and Opportunities: Hearing Before the Subcomm. on the Constitution, Civil Rights, and Civil Liberties, H. Comm. On*

the Judiciary, 111th Cong. (Apr. 22, 2010) (statement of Judy Brewer, Director, Web Accessibility Initiative at the W3C®). It is clear that the system of voluntary compliance has proved inadequate in providing Web site accessibility to individuals with disabilities. *See, e.g.,* National Council on Disability, *The Need for Federal Legislation and Regulation Prohibiting Telecommunications and Information Services Discrimination* (Dec. 19, 2006), available at *www.ncd.gov/newsroom/publications/2006/discrimination.htm* (last visited June 29, 2010) (discussing how competitive market forces have not proven sufficient to provide individual with disabilities access to telecommunications and information services.)

There is no doubt that the Web sites of state and local government entities are covered by title II of the ADA. *See* 28 CFR 35.102 (providing that the title II regulation "applies to all services, programs, and activities provided or made available by public entities"). Similarly, there seems to be little debate that the Web sites of recipients of federal financial assistance are covered by section 504 of the Rehabilitation Act. The Department has affirmed the application of these statutes to Web sites in a technical assistance publication, *Accessibility of State and Local Government Web sites to People with Disabilities* (available at *www.usdoj.gov/crt/ada/Web sites2.htm*), and in numerous agreements with State and local governments and recipients of Federal financial assistance.

The Department has also repeatedly affirmed the application of title III to Web sites of public accommodations. The Department first made this position public in a 1996 letter from Assistant Attorney General Deval Patrick responding to an inquiry by Senator Tom Harkin regarding the accessibility of Web sites to individuals with visual disabilities. *See* Letter from Deval L. Patrick, Assistant Attorney General, Civil Rights Division, Department of Justice, to Tom Harkin, U.S. Senator (Sept. 9, 1996), available at *www.justice.gov/crt/foia/tal712.txt.* The letter has been widely cited as a statement of the Department's position. The letter does not, however, state whether entities doing business exclusively on the Internet are covered by the ADA.

In 2000, the Department filed an amicus brief in the Fifth Circuit in *Hooks* v. *OKbridge, Inc.,* which involved a Web-only business. The Department's brief explained that a business providing services solely over the Internet is subject to the ADA's prohibitions on discrimination on the basis of disability. *See* Brief of the United States as Amicus Curiae in Support of Appellant, 232 F.3d 208 (5th Cir. 2000) (No. 99–50891), 1999 WL 33806215, available at *http://www.justice.gov/crt/briefs/hooks.htm.* In a 2002 amicus brief in the Eleventh Circuit in *Rendon* v. *Valleycrest Productions, Inc.,* the Department argued against a requirement, imposed outside of the Internet context by some Federal courts of appeals, that there be a nexus between a challenged activity and a private entity's "brick-and-mortar" facility to obtain coverage under title III. *See* Brief for the United States as Amicus Curiae in Support of Appellant, 294 F.3d 1279 (11th Cir. 2002) (No. 01–11197), 2001 WL 34094038, available at *http://www.justice.gov/crt/briefs/rendon.htm.* Although *Rendon* did not involve Web site access, the Department's brief argued that title III applies to any activity or service offered by a public accommodation, on or off the premises.

For years, businesses and individuals with disabilities alike have urged the Department to provide guidance on the accessibility of Web sites of entities covered by the ADA. While some actions have been brought regarding access to Web sites under the ADA that have resulted in courts finding liability or in the parties agreeing to a settlement to make the subject Web sites accessible, a clear requirement that provides the disability community consistent access to Web sites and covered entities clear guidance on what is required under the ADA does not exist. *See generally, Target,* 452 F. Supp. 2d 946; *Amazon.com and National Federation of the Blind Join Forces to Develop and Promote Web Accessibility* (Mar. 28, 2007), *http://www.nfb.org/nfb/NewsBot.asp?MODE=VIEW&ID=174* (last visited June 29, 2010); *Spitzer Agreement to Make Web Sites Accessible to the Blind and Visually Impaired* (Aug. 2004), *http://www.ag.ny.gov/media_center/2004/aug/aug19a_04.html* (last visited June 29, 2010). Two independent Federal agencies have also formally called on the Department to revise its regulations to make clear that the Web sites of entities covered under title III are subject to the ADA. *See* Federal Communications Commission, *Recommendation 9.10, National Broadband Plan* (Mar. 16, 2010), available at *http://www.broadband.gov/plan* (last visited June 29, 2010) ("The DOJ should amend its regulations to clarify the obligations of commercial establishments under title III of the Americans with Disabilities Act with respect to commercial Web sites"); National Council on Disability, *The Need for Federal Legislation and Regulation Prohibiting Telecommunications and Information Services Discrimination* (Dec. 19, 2006), available at *http://www.ncd.gov/newsroom/publications/2006/discrimination.htm* (last visited June 29, 2010) (urging the Department to clarify the ADA's coverage of Web sites of title III entities).

Although the Department has been clear that the ADA applies to Web sites of private entities that meet the definition of "public accommodations," inconsistent court decisions, differing standards for determining Web accessibility, and repeated calls for Department action indicate remaining uncertainty regarding the applicability of the ADA to Web sites of entities covered by title III. For these reasons, the Department is exploring what regulatory guidance it can propose to make clear to entities covered by the ADA their obligations to make their Web sites accessible. Despite the need for action, the Department appreciates the need to move forward deliberatively. Any regulations the Department adopts must provide specific guidance to help ensure Web access for individuals with disabilities without hampering innovation and technological advancement on the Web.

IV. Request for Public Comments

Before the Department seeks comment on specific regulatory text, the Department is seeking input from the public. In addition to seeking comments in response to the specific questions raised in this ANPRM, the Department is particularly interested in receiving comments from all of those who have a stake in ensuring that the Web sites of public accommodations and public entities are accessible to people with disabilities or would otherwise be affected by regulations requiring Web site access. The Department appreciates the complexity and potential impact of this initiative and therefore also seeks input from experts in the field of computer science, programming, networking, assistive technology, and other related fields whose feedback and expertise will be critical in developing a workable framework for Web site access that respects the unique characteristics of the Internet and its transformative impact on everyday life. In your comments, please refer to each question by number. Please provide additional information not addressed by the proposed questions if you believe it would be helpful in understanding the implications of imposing ADA

regulatory requirements on the Web sites of public accommodations and State and local government entities.

A. Accessibility standards to apply to Web sites of covered titles II and III entities

As previously mentioned, the Web Accessibility Initiative (WAI) of the World Wide Web Consortium (W3C®) has created recognized voluntary international guidelines for Web accessibility. These guidelines, set out in the Web Content Accessibility Guidelines (WCAG), detail how to make Web content accessible to individuals with disabilities. The most recent and updated version of the WCAG, the WCAG 2.0, was published in December 2008 and is available at *http://www.w3.org/TR/WCAG20/* (last visited June 29, 2010). According to the WAI, the WCAG 2.0 "applies broadly to more advanced technologies; is easier to use and understand; and is more precisely testable with automated testing and human evaluation." *See* WAI, *Web Content Accessibility Guidelines (WCAG) Overview,* available at *http://www.w3.org/WAI/intro/wcag.php* (last visited June 29, 2010).

The WCAG 2.0 contains 12 guidelines addressing Web accessibility. Each guideline contains testable criteria for objectively determining if Web content satisfies the guideline. In order for a Web page to conform to the WCAG 2.0, the Web page must satisfy the criteria for all 12 guidelines under one of three conformance levels: A, AA, or AAA. The three levels of conformance indicate a measure of accessibility and feasibility. Level A, which is the minimum level of conformance for access, contains criteria that provide basic Web accessibility and that are the most feasible for Web content developers. Level AA, which is the intermediate level for access, contains enhanced criteria that provide more comprehensive Web accessibility and yet are still feasible for Web content developers. Level AAA, which is the maximum level of access, contains criteria that may be less feasible for Web content developers. In fact, WAI does not recommend that Level AAA conformance be required as a general policy for entire Web sites because it is not possible to satisfy all Level AAA criteria for some content. *See* W3C®, *Understanding WCAG 2.0: Understanding Conformance* (Dec. 2008), *http://www.w3.org/TR/UNDERSTANDING–WCAG20/conformance.html* (last visited June 29, 2010).

Standards for Web site accessibility also exist for Federal government agencies, which are required to make their Web sites accessible under section 508 of the Rehabilitation Act of 1973, 29 U.S.C. 794(d) (section 508). Specifically, the Web sites of Federal government agencies must comply with the Electronic and Information Technology Accessibility Standards (section 508 standards) published by the U.S. Access Board, 36 CFR 1194, available at *http://www.access-board.gov/sec508/standards.htm* (last visited June 29, 2010). The Access Board is currently revising the section 508 standards, in part to harmonize the standards with model guidelines, such as the WCAG.

Question 1. Should the Department adopt the WCAG 2.0's "Level AA Success Criteria" as its standard for Web site accessibility for entities covered by titles II and III of the ADA? Is there any reason why the Department should consider adopting another success criteria level of the WCAG 2.0? Please explain your answer.

Question 2. Should the Department adopt the section 508 standards instead of the WCAG guidelines as its standard for Web site accessibility under titles II and III of the ADA? Is there a difference in compliance burdens and costs between the two standards? Please explain your answer.

Question 3. How should the Department address the ongoing changes to WCAG and section 508 standards? Should covered entities be given the option to comply with the latest requirements?

Question 4. Given the ever-changing nature of many Web sites, should the Department adopt performance standards instead of any set of specific technical standards for Web site accessibility? Please explain your support for or opposition to this option. If you support performance standards, please provide specific information on how such performance standards should be framed.

B. Coverage limitations

It is the Department's intention to regulate only governmental entities and public accommodations covered by the ADA that provide goods, services, programs, or activities to the public via Web sites on the Internet. Although some litigants have asserted that "the Internet" itself should be considered a place of public accommodation, the Department does not address this issue here. The Department believes that title III reaches the Web sites of entities that provide goods or services that fall within the 12 categories of "public accommodations," as defined by the statute and regulations. Because the Department is focused on the goods and services of public accommodations that operate exclusively or through some type of presence on the Web—whether hosting their own Web site or participating in a host's Web site—the Department wishes to make clear the limited scope of its regulations. For example, the Department is considering proposing explicit regulatory language that makes clear that Web content created or posted by Web site users for personal, noncommercial use is not covered, even if that content is posted on the Web site of a public accommodation or a public entity. This would include individual participation in popular online communities, forums, or networks in which people upload personal videos or photos or engage in exchanges with other users. The Department could also make clear that public accommodations and public entities are not liable for inaccessible content posted to their sites by individuals not under their control as long as they provide their Web site users the ability to make their posts accessible.

In addition, the Department does not intend to propose regulatory text that reaches the informal or occasional trading, selling, or bartering of goods or services by private individuals in the context of an online marketplace. The Department could distinguish such occasional trading activity by individuals acting in a private capacity from legally established business entities, ranging from sole proprietorships to limited liability companies and corporations. As long as these business entities offer the goods or services of a public accommodation online, they would be responsible for making such offerings accessible to individuals with disabilities. Lastly, a public accommodation or public entity would not be required to ensure the accessibility of Web sites that are linked to its site, but that it does not operate or control. However, to the extent an entity requires users of its Web site to utilize another Web site in order to take part in its goods and services (e.g., payment for items on one Web site must be processed through another Web site), the entity may be liable for the accessibility of other sites it requires its patrons to use even if it does not operate or control the site.

Question 5. The Department seeks specific feedback on the limitations for coverage that it is considering. Should the Department adopt any specific parameters regarding its proposed coverage limitations? How should the Department distinguish, in the context of an online marketplace, between informal or occasional trading, selling,

or bartering of goods or services by private individuals and activities that are formal and more than occasional? Are there other areas or matters regarding which the Department should consider adopting additional coverage limitations? Please provide as much detail as possible in your response.

C. Compliance Issues

Question 6. What resources and services are available to public accommodations and public entities to make their Web sites accessible? What is the ability of covered entities to make their Web sites accessible with in-house staff? What technical assistance should the Department make available to public entities and public accommodations to assist them with complying with this rule?

Question 7. Are there distinct or specialized features used on Web sites that render compliance with accessibility requirements difficult or impossible?

The Department has taken the position that covered entities with inaccessible Web sites may comply with the ADA's requirement for access by providing an accessible alternative, such as a staffed telephone line, for individuals to access the information, goods, and services of their Web site. *See Accessibility of State and Local Government Web sites to People with Disabilities,* available at *http://www.ada.gov/Web sites2.htm.* In order for an entity to meet its legal obligation under the ADA, an entity's alternative must provide an equal degree of access in terms of hours of operations and range of information, options, and services available. For example, a department store that has an inaccessible Web site that allows customers to access their credit accounts 24 hours a day, 7 days a week in order to review their statements and make payments would need to provide access to the same information and provide the same payment options in its accessible alternative.

Question 8. Given that most Web sites today provide significant amounts of services and information in a dynamic, evolving setting that would be difficult, if not impossible, to replicate through alternative, accessible means, to what extent can accessible alternatives still be provided? Might viable accessible alternatives still exist for simple, non-dynamic Web sites?

D. Effective Date

Following the publication of a final rule, the Department must set an effective date for the application of any new title II or title III regulations requiring the Web sites of entities covered by the ADA to be accessible. When the ADA was enacted, the effective dates for various provisions were delayed in order to provide time for covered entities to become familiar with their new obligations. Under the 1991 regulations, new construction under title II and alterations under either title II or title III had to comply with the design standards of the Department's new regulations by January 26, 1992, six months after the regulations were published. *See* 28 CFR 35.151(a)–(b); 28 CFR 36.402(a). For new construction under title III, the ADA requirements applied to facilities of public accommodations designed and constructed for first occupancy after January 26, 1993——eighteen months after the ADA Standards were published by the Department. *See* 28 CFR 36.401(a).

The Department is considering an effective date of six months after the publication of the final rule for newly created Web sites or pages, *i.e.,* those that have been placed online for the first time six months after the publication of the final rule. Under such a proposal, newly created or completely redesigned Web sites will have to come into total compliance with any Web access requirements adopted by the Department. New pages on existing Web sites would need to comply with the Web access requirements to the maximum extent feasible. The Department is considering this provision for new pages on existing Web sites because the Department recognizes that certain features on existing Web sites—such as navigation components or use of integrated Web technology with limited capacity for accessibility—cannot be completely altered or replaced without a complete redesign of the entire site. For this reason, the Department is considering requiring new pages on existing Web sites to comply with the accessibility requirements to the maximum extent feasible. The Department recognizes, however, that in some cases this may result in incomplete accessibility of new pages. For existing Web sites or pages, the Department is considering having the Web site access requirement apply two years after the date of publication of the final rule. The Department is considering this period of time for existing Web sites because it recognizes that many Web sites have hundreds (and some thousands) of pages that will need to be made accessible.

Question 9. The Department seeks comment on the proposed time frames for compliance. Are the proposed effective dates for the regulations reasonable or should the Department adopt shorter or longer periods for compliance? Please provide as much detail as possible in support of your view.

Question 10. The Department seeks comment regarding whether such a requirement would cause some businesses to remove older material rather than change the content into an accessible format. Should the Department adopt a safe harbor for such content so long as it is not updated or modified?

Question 11. Should the Department take an incremental approach in adopting accessibility regulations applicable to Web sites and adopt a different effective date for covered entities based on certain criteria? For instance, should the Department's regulation initially apply to entities of a certain size (*e.g.,* entities with 15 or more employees or earning a certain amount of revenue) or certain categories of entities (e.g., retail Web sites)? Please provide as much detail and information as possible in support of your view.

E. Cost and Benefits of Web Site Regulations

Executive Order 12866 requires Federal agencies to submit "significant regulatory action" to the Office of Management and Budget's (OMB) Office of Information and Regulatory Affairs (OIRA) for review and approval prior to publication in the **Federal Register**. See E.O. 12866, 58 FR 51735 (Sept. 30, 1993), as amended; OMB Budget Circular A 4, *http://www.whitehouse.gov/OMB/circulars/a004/a-4.pdf* (Sept. 17, 2003) (last visited June 29, 2010). A proposed regulatory action is deemed to be "economically significant" under section 3(f)(1) of Executive Order 12866 if it has an annual effect on the economy of $100 million or more. *Id.* Regulatory actions that are deemed to be economically significant must include a formal regulatory analysis—a report analyzing the economic costs and benefits of the regulatory action. A formal cost-benefit analysis must include both qualitative and quantitative measurements of the benefits and costs of the proposed rule as well as a discussion of each potentially effective and reasonably feasible alternative. Since this is an ANPRM, the Department is not required to conduct certain economic analyses or written assessments that otherwise may be required for other more formal types of agency regulatory actions (e.g., notices of proposed rulemaking or final rules). If any proposed rule the Department issues regarding Web access is likely to have an economically

significant impact on the economy, the Department will prepare a formal regulatory analysis.

Question 12. What data source do you recommend to assist the Department in estimating the number of public accommodations (i.e., entities whose operations affect commerce and that fall within at least one of the 12 categories of public accommodations listed above) and State and local governments to be covered by any Web site accessibility regulations adopted by the Department under the ADA? Please include any data or information regarding entities the Department might consider limiting coverage of, as discussed in the "coverage limitations" section above.

Question 13. What are the annual costs generally associated with creating, maintaining, operating, and updating a Web site? What additional costs are associated with creating and maintaining an accessible Web site? Please include estimates of specific compliance and maintenance costs (software, hardware, contracting, employee time, etc.). What, if any, unquantifiable costs can be anticipated from amendments to the ADA regulations regarding Web site access?

Question 14. What are the benefits that can be anticipated from action by the Department to amend the ADA regulations to address Web site accessibility? Please include anticipated benefits for individuals with disabilities, businesses, and other affected parties, including benefits that cannot be fully monetized or otherwise quantified.

Question 15. What, if any, are the likely or potential unintended consequences (positive or negative) of Web site accessibility requirements? For example, would the costs of a requirement to provide captioning to videos cause covered entities to provide fewer videos on their Web sites?

Question 16. Are there any other effective and reasonably feasible alternatives to making the Web sites of public accommodations accessible that the Department should consider? If so, please provide as much detail about these alternatives, including information regarding their costs and effectiveness in your answer.

F. Impact on Small Entities

Consistent with the Regulatory Flexibility Act of 1980 and Executive Order 13272, the Department must consider the impacts of any proposed rule on small entities, including small businesses, small nonprofit organizations, and small governmental jurisdictions. *See* 5 U.S.C. 603–04 (2006); E.O. 13272, 67 FR 53461 (Aug. 13, 2002). The Department will make an initial determination as to whether any rule it proposes is likely to have a significant economic impact on a substantial number of small entities, and if so, the Department will prepare an initial regulatory flexibility analysis analyzing the economic impacts on small entities and regulatory alternatives that reduce the regulatory burden on small entities while achieving the goals of the regulation. In response to this ANPRM, the Department encourages small entities to provide cost data on the potential economic impact of adopting a specific requirement for Web site accessibility and recommendations on less burdensome alternatives, with cost information.

Question 17. The Department seeks input regarding the impact the measures being contemplated by the Department with regard to Web accessibility will have on small entities if adopted by the Department. The Department encourages you to include any cost data on the potential economic impact on small entities with your response. Please provide information on capital costs for equipment, such as hardware and software needed to meet the regulatory requirements; costs of modifying existing processes and procedures; any affects to sales and profits, including increases in business due to tapping markets not previously reached; changes in market competition as a result of the rule; and cost for hiring web professionals for to assistance in making existing Web sites accessible.

Question 18. Are there alternatives that the Department can adopt, which were not previously discussed in response to *Questions 11* or *16,* that will alleviate the burden on small entities? Should there be different compliance requirements or timetables for small entities that take into account the resources available to small entities or should the Department adopt an exemption for certain or all small entities from coverage of the rule, in whole or in part. Please provide as much detail as possible in your response.

G. Other Issues

Question 19. The Department is interested in gathering other information or data relating to the Department's objective to provide requirements for Web accessibility under titles II and III of the ADA.

Are there additional issues or information not addressed by the Department's questions that are important for the Department to consider? Please provide as much detail as possible in your response.

Dated: July 21, 2010.

Thomas E. Perez,

Assistant Attorney General, Civil Rights Division.

[FR Doc. 2010–18334 Filed 7–22–10; 4:15 pm]

BILLING CODE 4410–13–P

DEPARTMENT OF JUSTICE

28 CFR Part 36

[CRT Docket No. 112]

RIN 1190–AA63

Nondiscrimination on the Basis of Disability; Movie Captioning and Video Description

AGENCY: Civil Rights Division, Justice.

ACTION: Advance Notice of Proposed Rulemaking.

SUMMARY: The Department of Justice (Department) is considering revising its regulation implementing title III of the Americans with Disabilities Act (ADA) in order to establish requirements for making the goods, services, facilities, privileges, accommodations, or advantages offered by movie theater owners or operators at movie theaters accessible to individuals who are deaf or hard of hearing or who are blind or have low vision by screening movies with closed captioning or video description. The Department is issuing this Advance Notice of Proposed Rulemaking (ANPRM) in order to solicit public comment on various issues relating to the potential application of such requirements and to obtain background information for the regulatory assessment the Department may need to prepare in adopting any such requirements.

DATES: The Department invites written comments from members of the public. Written comments must be postmarked and electronic comments must be submitted on or before January 24, 2011.

ADDRESSES: You may submit comments, identified by RIN 1190–AA63 (or Docket ID No. 112), by any one of the following methods:

- *Federal eRulemaking Web site: www.regulations.gov.* Follow the Web site's instructions for submitting comments. The Regulations.gov Docket ID is DOJ–CRT–0112.
- *Regular U.S. mail:* Disability Rights Section, Civil Rights Division, U.S. Department of Justice, P.O. Box 2885, Fairfax, VA 22031–0885.
- *Overnight, courier, or hand delivery:* Disability Rights Section, Civil Rights Division, U.S. Department of

Justice, 1425 New York Avenue, N.W., Suite 4039, Washington, DC 20005.

FOR FURTHER INFORMATION CONTACT: Kathleen Devine, Attorney, Disability Rights Section, Civil Rights Division, U.S. Department of Justice, at (202) 307–0663 (voice or TTY). This is not a toll free number. Information may also be obtained from the Department's toll-free ADA Information Line at (800) 514–0301 (voice) or (800) 514–0383 (TTY).

You may obtain copies of this ANPRM in large print or Braille or on audiotape or computer disk by calling the ADA Information Line at (800) 514–0301 (voice) and (800) 514–0383 (TTY). This ANPRM is also available on the ADA Home Page at *http://www.ada.gov.*

SUPPLEMENTARY INFORMATION:

I. Electronic Submission of Comments and Posting of Public Comments

You may submit electronic comments to *www.regulations.gov.* When submitting comments electronically, you must include DOJ–CRT 2010–0112 in the search field, and you must include your full name and address. Electronic files should avoid the use of special characters or any form of encryption and should be free of any defects or viruses.

Please note that all comments received are considered part of the public record and made available for public inspection online at *www.regulations.gov.* Submission postings will include any personal identifying information (such as your name, address, etc.) included in the text of your comment. If you include personal identifying information (such as your name, address, etc.) in the text of your comment but do not want it to be posted online, you must include the phrase "PERSONAL IDENTIFYING INFORMATION" in the first paragraph of your comment. You must also include all the personal identifying information you want redacted along with this phrase. Similarly, if you submit confidential business information as part of your comment but do not want it to be posted online, you must include the phrase "CONFIDENTIAL BUSINESS INFORMATION" in the first paragraph of your comment. You must also prominently identify confidential business information to be redacted within the comment. If a comment has so much confidential business information that it cannot be effectively redacted, all or part of that comment may not be posted on *www.regulations.gov.*

Comments on this ANPRM will also be made available for public viewing by appointment at the Disability Rights Section, located at 1425 New York Avenue, NW., Suite 4039, Washington, DC 20005, during normal business hours. To arrange an appointment to review the comments, please contact the ADA Information Line at (800) 514–0301 (voice) or (800) 514–0383 (TTY).

The reason that the Civil Rights Division is requesting electronic comments before Midnight Eastern Time on the day the comment period closes is because the inter-agency Regulations.gov/Federal Docket Management System (FDMS) which receives electronic comments terminates the public's ability to submit comments at Midnight on the day the comment period closes. Commenters in time zones other than Eastern may want to take this fact into account so that their electronic comments can be received. The constraints imposed by the Regulations.gov/FDMS system do not apply to U.S. postal comments, which will be considered as timely filed if they are postmarked before Midnight on the day the comment period closes.

II. Public Hearing

The Department will hold at least one public hearing to solicit comments on the issues presented in this notice. The Department plans to hold the public hearing during the 180-day public comment period. The date, time, and location of the public hearing will be announced to the public in the **Federal Register** and on the Department's ADA Home Page, *http://www.ada.gov/.*

III. Background

A. Statutory and Rulemaking History Up to the 2008 NPRM

On July 26, 1990, President George H.W. Bush signed into law the ADA, a comprehensive civil rights law prohibiting discrimination on the basis of disability. The ADA broadly protects the rights of individuals with disabilities in employment, access to State and local government services, places of public accommodation, transportation, and other important areas of American life. The ADA also requires, in pertinent part, newly designed and constructed or altered public accommodations, and commercial facilities to be readily accessible to and usable by individuals with disabilities. 42 U.S.C. 12101 *et seq.* Section 306(b) of title III directs the Attorney General to promulgate regulations to carry out the provisions of title III, other than certain provisions dealing specifically with transportation. 42 U.S.C. 12186(b).

Title III prohibits discrimination on the basis of disability in the activities of places of public accommodation (private entities whose operations affect commerce and that fall into one of twelve categories listed in the ADA, such as restaurants, movie theaters, schools, day care facilities, recreational facilities, and doctors' offices) and requires newly constructed or altered places of public accommodation—as well as commercial facilities (privately owned, nonresidential facilities such as factories, warehouses, or office buildings)—to comply with the ADA Standards. 42 U.S.C. 12181–89.

On July 26, 1991, the Department issued its final rule implementing title III, which is codified at 28 CFR part 36. Appendix A of the title III regulation, at 28 CFR part 36, contains the ADA Standards for Accessible Design. On September, 30, 2004, the Department published an advance notice of proposed rulemaking (2004 ANPRM) to begin the process of updating the 1991 regulation to adopt revised ADA Standards based on the relevant parts of the 2004 ADA/ABA Guidelines. 69 FR 58768. On June 17, 2008, the Department issued a Notice of Proposed Rulemaking (NPRM) to adopt the revised ADA Standards and, in pertinent part, revise the title III regulations. 73 FR 34466. The NPRM addressed the issues raised in the public's comments to the ANPRM and sought additional comment.

In that NPRM, the Department stated that it was considering options under which it might require that movie theater owners or operators exhibit movies that are captioned for patrons who are deaf or hard of hearing and movies that provide video (narrative) description[1] for patrons who are blind or have low vision.[2] The Department

[1] In the June 17, 2008 NPRM, the Department used the term "narrative description" to define the process and experience whereby individuals who are blind or have low vision are provided with a spoken narrative of key visual elements of a movie, such as actions, settings, facial expressions, costumes, and scene changes. In response to comments received from this NPRM, the Department now refers to this process as video description.

[2] The Department's regulations already require that public accommodations provide effective communication to the public through the provision of auxiliary aids and services, including, where appropriate, captioning and audio or video description. *See generally,* 28 CFR 36.303; 28 CFR part 36, Appendix B. To that end, the Department has entered into settlement agreements with a major museum and various entertainment entities requiring such aids and services. *See e.g.,* Agreement Between the United States of America and the International Spy Museum, (June 3, 2006), available at *http://www.ada.gov/spymuseum.htm.*; Agreement Between the United States of America and Walt Disney World Co. Under the Americans

noted, for example, that technical advances since the early 1990s have made open and closed captioning for movies more readily available and effective. The Department also stated that it understood that the movie industry was transitioning, in whole or in part, to movies in digital format and that movie theater owners and operators were beginning to purchase digital projectors. As noted in that NPRM, movie theater owners and operators with digital projectors may have available to them different options for providing captioning and video description than those without digital projectors. The Department sought comments regarding whether and how to require captioning and video description while the film industry made the transition to digital. Also, the Department stated its concern about the potential cost to exhibit captioned movies, noting that cost may vary depending upon whether open or closed captioning is used and whether or not digital projectors are used, and stated that the cost of captioning must stay within the parameters of the undue burden requirement in 28 CFR 36.303(a). The Department also expressed concerns about the cost of video description equipment but stated that it understood that the cost for video description was less than that for closed captioning. The Department then stated that it was considering the possibility of requiring public accommodations to exhibit all new movies in captioned format and with video description at every showing. The Department indicated that at that time, it anticipated that it would not specify which types of captioning to provide, leaving that to the discretion of the movie theater owners and operators.

The Department received numerous comments urging the Department to issue captioning and video description regulations under the ADA. These comments are discussed *infra.* Recently, the United States Court of Appeals for the Ninth Circuit held that the ADA required a chain of movie theatres to exhibit movies with closed captioning and video description unless the theaters could show that to do so would amount to a fundamental alteration or undue burden. *Arizona* v. *Harkins Amusement Enterprises, Inc.,*—F.3d. —, 2010 WL 1729606 (9th Cir., April 30, 2010). In light of the comments received pursuant to the NPRM, the Ninth Circuit decision, and the additional reasons detailed below, the Department has decided to begin the process of soliciting additional comments and suggestions with respect to what an NPRM regarding captioning and video description should contain.

B. Legal Foundation for Captioning and Video Description

Creating regulations that would require movie theater owners and operators to exhibit closed captioned and video described movies falls squarely within the requirements of the ADA. Title III of the ADA includes movie theaters within its definition of places of public accommodation. 42 U.S.C. 12181(7). Title III makes it unlawful for places of public accommodation, such as movie theaters, to discriminate against an individual in the full and equal enjoyment of the goods, services, facilities, privileges, advantages, or accommodations of any place of public accommodation. 42 U.S.C. 12182(a). Moreover, title III prohibits places of public accommodation from affording an unequal or lesser service to individuals or classes of individuals with disabilities than is offered to other individuals. 42 U.S.C. 12182(b)(1)(A)(ii). Title III requires places of public accommodation to take "such steps as may be necessary to ensure that no individual with a disability is excluded, denied services, segregated or otherwise treated differently * * * because of the absence of auxiliary aids and services, unless the entity can demonstrate that taking such steps would fundamentally alter the nature of the good, service, facility, privilege, advantage, or accommodation being offered or would result in an undue burden." 42 U.S.C. 12182(b)(2)(A)(iii). The statute defines auxiliary aids to include "qualified interpreters or other effective methods of making aurally delivered materials available to individuals with hearing impairments" and "taped texts, or other effective methods of making visually delivered materials available to individuals with visual impairments." 42 U.S.C. 12103(1)(A)–(B). The Department's title III regulation specifically lists open and closed captioning and audio recordings and other effective methods of making visually delivered materials available to individuals with visual impairments as examples of auxiliary aids and services that should be provided by places of public accommodations, 28 CFR 36.303(b)(1)–(2), unless the public accommodation can demonstrate that providing such aids and services would fundamentally alter the nature of the good or service being offered or would result in an undue burden. 28 CFR 36.303(a). In addition, the Department's title III regulation mandates that if a provision of a particular auxiliary aid or service by a public accommodation would result in a fundamental alteration in the nature of the goods or services being offered or in an undue burden, the public accommodation shall provide an alternative auxiliary aid or service, if one exists, that would not result in an alteration or such burden but would nevertheless ensure that, to the maximum extent possible, individuals with disabilities receive the goods and services offered by the public accommodation. 28 CFR 36.303(f).

While the ADA itself contains no explicit language regarding captioning (or video description) in movie theaters, the legislative history of title III states that "[o]pen-captioning * * * of feature films playing in movie theaters, is not required by this legislation. Filmmakers, are, however, encouraged to produce and distribute open-captioned versions of films, and theaters are encouraged to have at least some pre-announced screenings of a captioned version of feature films." H.R. Rep. No. 101–485 (II), at 108 (1990); S. Rep. No. 101–116 at 64 (1989). Congress was silent on the question of closed captioning in movie theaters, a technology not yet developed at that time for first-run movies, but it acknowledged that closed captions may be an effective auxiliary aid and service for making aurally delivered information available to individuals who are deaf or hard of hearing. *See* H.R. Rep. No. 101–485 (II), at 107.[3] In addition, the House Committee stated that "technological advances can be expected to further enhance options for making meaningful and effective opportunities available to individuals with disabilities. Such advances may require public accommodations to provide auxiliary aids and services in the future which today would not be required because they would be held to impose undue burdens on such entities." *Id.* at 108.[4] Similarly, in 1991, the Department stated that "[m]ovie theaters are not required * * * to present open-captioned films," but was silent as to closed captioning. 56 FR 35544,

With Disabilities Act Concerning the Use of Auxiliary Aids at Walt Disney World (January 17, 1997), available at *http://www.ada.gov/disagree.htm* .

[3] Congress also was silent regarding requiring video description of movies.

[4] As the district court in *Ball* v. *AMC Entertainment, Inc.,* 246 F. Supp. 2d 17, 22 (D.D.C. 2003) noted, "Congress explicitly anticipated the situation presented in this case [the development of technology to provide closed captioning of movies]. Therefore, the isolated statement that open captioning of films in movie theaters was not required in 1990 cannot be interpreted to mean that [movie theaters] cannot *now* be expected and required to provide closed captioning of films in their movie theaters." (Emphasis in original).

35567 (July 26, 1991). The Department also noted, however, that "other public accommodations that impart verbal information through soundtracks on films, video tapes, or slide shows are required to make such information accessible to persons who are deaf or hard of hearing. Captioning is one means to make the information accessible to individuals with disabilities." *Id.*

It is the Department's view that the legislative history of the ADA and the Department's commentary in the preamble to the 1991 regulation make clear that Congress was not requiring open captioning of movies in 1990, but that it was leaving open the door for the Department to require captioning in the future as the technology developed. It is also the Department's position that neither the ADA nor its legislative history precludes, in any way, issuing regulations regarding video description. To the contrary, given the present state of technology, we believe that requirements of captioning and video description fit comfortably within the statutory text.

In April of this year, the first federal appellate court to squarely address the question of whether captioning and video description are required under the ADA determined that the ADA required movie theatre owner and operator Harkins Amusement Enterprises, Inc., and its affiliates, to screen movies with closed captioning and descriptive narration (video description) unless such owners and operators could demonstrate that to do so would amount to a fundamental alteration or undue burden. *Arizona* v. *Harkins Amusement Enterprises, Inc.,*—F.3d. —, 2010 WL 1729606 (9th Cir., April 30, 2010).[5] The Ninth Circuit found that because closed captioning and video descriptions are correctly classified as "auxiliary aids and services" that a movie theater may be required to provide under the ADA, the lower court erred in finding that these services are foreclosed as a matter of law. *Id.*

C. Movie Basics

The very first movies were silent films. "Talkies" added sound as a separate component. Although many technological advances have been made since the advent of the "talkie," the practice of exhibiting the visual portion of the movie separate from the sound is still common. Today, the cinematography portion of many movies is exhibited in an analog (*i.e.* film) format, and the aural portion is exhibited in a digital format. Five to six reels of film are used for a typical two-hour long movie. These reels must be physically delivered to each movie theater exhibiting the movie. Digital sound is captured on CD-roms or optically or digitally on the film itself. Digital sound is synchronized to the visual images on the screen by a mechanism, called a reader head, that reads a timecode track printed on the film.

Digital cinema, by contrast, captures images, data, and sound on data files as a digital "package" that is stored on a hard drive or a flash drive. Digital movies are physically delivered to movie theaters on high resolution DVDs or removable or external hard drives, or to movie theaters' servers via Internet, fiberoptic, or satellite networks. The movie industry recently has begun transitioning to digital cinema and it is the Department's understanding that, in the industry's view, this transition is one of the most profound advances in motion picture production and technology of the last 100 years and will provide numerous advantages both for the industry and the audience.

D. Captioning and Video Description Generally

Captioning makes movies shown in theaters accessible to individuals whose hearing is too limited to benefit from assistive listening devices, as well as to individuals with other hearing disabilities. Open captions are similar to subtitles in that the text of the dialog is visible to everyone in the theater. Unlike subtitles, open captions also describe other sounds and sound makers (*e.g.,* sound effects, music, and the character who is speaking) in an on-screen text format. Open movie captions are sometimes referred to as "burned in" or "hardcoded" captions. However, new open captioning technology enables studios to superimpose captions without making a burned in copy or having to deliver a separate version of the movie. Open-captioned films are most often exhibited in movie theaters at certain limited showings.

Closed captioning displays the written text of the dialog and other sounds or sound makers only to those individuals who request it. It is the Department's understanding that, at the time comments were received in response to the 2008 NPRM, there were various types of closed captioning systems either in use or in development, including the Rear Window system, hand-held displays similar to a PDA (personal digital assistant), eyeglasses fitted with a prism over one lens, and projected bitmap captions. It is also the Department's understanding that, at present, the only system that has gained a foothold in the marketplace is the Rear Window system. Unlike open captions that are sometimes burned onto the film itself, Rear Window captions are generated via a technology that neither is physically attached to the film nor requires a separate copy of the film to be made. The Rear Window system works through a movie theater's digital sound system. It uses a computer, a time code signal, and captioning software to project the captions, in reverse, on an LED display in the rear of the theater. A clear adjustable panel that is mounted on, or near an individual viewer's seat reflects the captions correctly and superimposes them on that panel so that it appears to a Rear Window user that the captions are on or near the movie image. Because this technology enables a movie theater that has been equipped with a Rear Window system to exhibit any movie that a movie producer has captioned, at any showing, without displaying captions to every movie-goer in the theater, individuals who are deaf or hard of hearing may enjoy movies in the same theater as those who do not require captioning.

Video description is a technology that enables individuals who are blind or have low vision to enjoy movies by providing a spoken narration of key visual elements of a movie, such as actions, settings, facial expressions, costumes, and scene changes. Visual description fills in information about the visual content of a movie where there are no corresponding audio elements in the film. It requires the creation of a separate script written by specially trained writers who prepare a script for video description that is recorded on an audiotape or CD that is synchronized with the film as it is projected. The script is transmitted to the user through infra-red or FM transmission to wireless headsets.

E. Increasing Numbers of Individuals With Hearing and Vision Impairments

The percentage of Americans approaching middle age and older is increasing. According to 2000 Census figures, Baby Boomers (*i.e.,* individuals born between 1946 and 1964 or who were between the ages of 36 and 54 in 2000), comprised nearly a third of all Americans. Just over a fifth of the American populous was age 55 or older. From 1990 to 2000, the two fastest growing age groups were those 45 to 49 and 50 to 54. The younger of the two groups increased by nearly 45 percent, and the older increased by more than half (54.9 percent). Together these

[5] This court was guided, in part, by the *amicus* brief filed by the United States in support of requiring closed captioning and video description.

groups comprised nearly 38 million people (37,677,952). When joined with other "seniors," the 2000 Census figure for the over 45 age group increased to nearly 97 million people (96,944,389). Assuming the population has remained fairly constant, when the 2010 Census is completed and the results are released, Baby Boomers, who will then fall between the ages of 46 and 64, will make older Americans the largest segment of the U.S. population.

The aging of the population is significant because of the correlation between aging and hearing and vision impairment or loss. An October 21, 2008 Department of Health and Human Services' Progress Review on Vision and Hearing in the United States noted that Richard Klein, Chief of the NCHS Health Promotion Statistics Branch, found that there are about 21 million adults in the United States that are visually impaired, and about 36 million (17 percent) have some degree of hearing loss.[6] The Progress Review also noted that "[a]s with vision problems, the number of U.S. adults with hearing loss is expected to increase significantly as the population ages, because hearing loss and aging are related to a high degree. Hearing loss is one of the three most prevalent chronic conditions in older Americans, ranking just after hypertension and arthritis." Progress Review: Vision and Hearing, *http://www.healthypeople.gov/data/2010prog/focus28/.* Moreover, at least one hearing loss Web site reports that "[a]s baby boomers reach retirement age starting in 2010, th[e] number of [Americans with hearing loss] is expected to rapidly climb and nearly double by the year 2030." Hearing Loss Association of America, Facts on Hearing Loss, *http://www.hearingloss.org/learn/factsheets.asp.*

[6] According to the National Institute on Deafness and Other Communication Disorders of the National Institutes of Health, in 2004 there were 28 million Americans who had some type of hearing loss, and 500,000 to 750,000 Americans who had severe to profound hearing loss or deafness. Healthy Hearing 2010: Where Are We Now?, *http://www.nidcd.nih.gov/health/inside/spr05/pg1.asp.* The National Eye Institute of the National Institutes of Health reported in 2004, "With the aging of the population, the number of Americans with major eye diseases is increasing, and vision loss is becoming a major health problem. By the year 2020, the number of people who are blind or have low vision is projected to increase substantially. * * * Blindness or low vision affects 3.3 million Americans age 40 or over, or one in 28, * * *. This figure is projected to reach 5.5 million by 2020. * * * [L]ow vision and blindness increase significantly with age, particularly in people over age 65." *See http://www.nei.nih.gov/news/pressreleases/041204.asp.*

F. The Department's Rulemaking History Regarding Captioning and Video Description

When the Department issued its September 30, 2004 advance notice of proposed rulemaking (ANPRM), it did not raise movie captioning or video description as potential areas of regulation. Despite that fact, several ANPRM commenters requested that the Department consider regulating in these areas. The Department has determined that since the publication of the 1991 regulation, new "closed" technologies for movie captioning and video description have been developed. By 1997, these technologies were released into the marketplace.[7]

Given the availability of this new technology, mindful that the ADA's legislative history made clear that the ADA ought not be interpreted so narrowly or rigidly that new technologies are excluded, and aware that assistive listening devices and systems in movie theaters cannot be used to effectively convey the audio content of films for individuals who are deaf or who have severe or profound hearing loss, the Department decided to broach the topic of requiring closed captioning and video description at movie theaters in the 2008 NPRM. The NPRM asked exploratory questions about, but proposed no regulatory text for, movie captioning and video descriptions. The Department received many comments from individuals with disabilities, organizations representing individuals with disabilities, non-profit organizations, state governmental entities, and representatives from movie studios and movie theater owners and operators on these two issues.

Rather than using these comments to formulate a final rule, however, the Department is issuing this supplemental ANPRM for three main reasons. First, the Department wishes to obtain more information regarding several issues raised by commenters that were not contemplated at the time the 2008 NPRM was published. Second, the Department seeks public comment on several technical questions that arose from the research the Department undertook to address some of the issues raised by commenters to the original NPRM. Finally, in the two years that have passed since issuance of the 2008 NPRM, the Department is aware that movie theater owners and operators, particularly major movie theater owners and operators, either have entered into, or had plans to enter into, agreements to convert to digital cinema. However, during this same time period, the United States' economy, and the profitability of many public accommodations, experienced significant setbacks. The Department wishes to learn more about the status of digital conversion, concrete projections regarding if and when movie theater owners and operators, both large and small, expect to exhibit movies using digital cinema, when such movie theater owners and operators expect to implement digital cinema, by percentages, in their theaters, and any relevant protocols, standards, and equipment that have been developed regarding captioning and video description for digital cinema. In addition, the Department would like to learn if, in the last two years, other technologies or areas of interest (*e.g.,* 3D) have developed or are in the process of development that either would replace or augment digital cinema or make any regulatory requirements for captioning and video description more difficult or expensive to implement.

[7] The first feature film with closed captions and video description, *The Jackal,* was exhibited at a California movie theater in 1997. *The Jackal*'s release was followed by the release of *Titanic*—the first major studio direct-release of a movie with closed captioning and video description capabilities.

G. Response to 2008 NPRM Comments Concerning Movie Captioning and Video Description, Analysis and Discussion of Proposed Regulatory Approach

Although the 2008 NPRM did not propose any specific regulatory language with regard to movie captioning or video description, the Department sought input from the public as to whether the Department's regulation should require movie theater owners and operators to exhibit movies that have captioning for patrons who are deaf or hard of hearing and video description for individuals who are blind or have low vision. The Department asked whether, within a year of the revised regulation's effective date, all new movies should be exhibited with captions and video description at every showing or whether it would be more appropriate to require captions and video description less frequently. The preamble made clear that the Department did not intend to specify which types of captioning to provide and stated that such decisions would be left to the discretion of the movie theater owners and operators.

Individuals with disabilities, advocacy groups, a representative from a non-profit organization, and representatives of state governments, including eleven State Attorneys General, overwhelmingly supported issuance of a regulation requiring movie

theater owners and operators to exhibit captioned and video described movies at all showings unless doing so would result in an undue burden or fundamental alteration. These groups noted that although the technology to exhibit movies with captions and video description has been in existence for about ten years, most movie theaters still were not exhibiting movies with captioning and video description. As a result, these groups indicated that they believed regulatory action should not be delayed until the conversion to digital cinema had been completed. One commenter in this group said that because federal law requires movie studios to caption movies prior to their release to cable and television media, *see, e.g.,* 47 CFR 79.1, it made good business sense for studios to caption movies prior to their being released to movie theater owners and operators. Several commenters requested that any regulation include factors describing what constitutes effective captioning and video description, including that captioning be within the same line of sight to the screen as the movie so that individuals who are deaf or hard of hearing can watch the movie and read the captions at the same time, that the captioning be accessible from each seat, that the captions be of sufficient size and contrast to the background so as to be easily readable, and that the recommendations from the Telecommunications and Electronics and Information Technology Advisory Committee (TEITAC) Report to the Access Board that captions be "timely, accurate, complete, and efficient" be included.[8] The Department has carefully considered these requests and believes that more information is required before making a decision as to how many movies should be screened with captioning and video description available and whether factors that describe what constitutes effective captioning and video description would be helpful to movie theater owners and operators and individuals with disabilities.

The State Attorneys General supported the Department's statement in the 2008 NPRM that the Department did not anticipate specifying which type of captioning to provide or what type of technology to use to provide video description, but would instead leave that to the discretion of the movie theater owners and operators. These State Attorneys General said that such discretion in the selection of the type of technology was consistent with the statutory and regulatory scheme of the ADA and would permit any new regulation to keep pace with future advancements in captioning and video description technology. These same commenters stated that such discretion may result in a mixed use of both closed captioning and open captioning, affording more choices both for the movie theater owners and operators and for individuals who are deaf or hard of hearing. The Department has considered these points and has decided that this ANPRM should request additional comments regarding whether the Department should specifically require closed captioning or permit motion picture owners and operators to choose which type of captioning to provide in order to satisfy any regulatory requirements the Department might impose.

Representatives from the movie theater industry strongly urged the Department not to issue a regulation requiring captioning (but were silent as to requiring video description) at movie theaters. Some industry commenters also opposed any regulation by the Department in this area claiming that since the Access Board has not issued a regulation to require the exhibition of captioned and video described movies in public accommodations, the Department is precluded from so doing. These commenters misunderstood the allocation of regulatory authority under the ADA. The ADA authorizes the Access Board to issue design guidelines for accessible buildings and facilities and requires that the design standards for buildings and facilities included in regulations issued by the Department be consistent with the minimum guidelines and requirements issued by the Architectural and Transportation Barriers Compliance Board. *See* 42 U.S.C. 12186(c). It is beyond the scope of the Access Board's authority to establish regulations governing aspects of ADA implementation unrelated to design and construction issues. The Department, by contrast, has broad regulatory authority to implement additional provisions of the ADA, including those requiring covered entities to ensure effective communication with their clients and customers.

Industry commenters also said that the cost of obtaining the equipment necessary to display closed captioned and video described movies would constitute an undue burden. One industry commenter stated that the cost of equipment to display both closed captions and video description per screen can approach $11,000, plus additional installation expenses. The Department is aware that there are costs associated with providing closed captioning and video description technology and that for some movie theater owners and operators, particularly independent or very small movie theater companies, obtaining captioning and video description equipment may indeed constitute an undue burden. However, after carefully considering the concerns raised about the costs of implementing captioning and video description technology, the Department needs additional, more specific, and more recent information on the issue of undue burden.

In addition, in an effort to spread out any implementation costs so that costs could be absorbed over time and would lessen any financial impact on theater owners and operators, the Department is considering a provision that would phase in compliance requirements. It is the Department's intention that such a provision, along with normal swings in supply and demand (*e.g.,* commenters noted that as more theaters purchase closed captioning and video description technologies, their costs will drop), could insulate many movie theater owners and operators from an undue burden.

Some industry commenters argued also that because the industry has made progress in making cinema more accessible without mandates to caption or describe movies, the Department should wait until the movie industry has completed its conversion to digital cinema to regulate. According to a commenter representing major movie producers and distributors, the number of motion pictures produced with closed captioning by its member studios had grown to 88 percent of total releases by the end of 2007, early 2008; the number of motion pictures produced with open captioning by its member studios had grown to 78 percent of total releases by the end of 2007, early 2008; and the number of motion pictures provided with video description has consistently ranged between 50 and 60 percent of total releases. This commenter explained that movie producers and distributors, not movie theater owners and operators, determine whether to caption, what to caption and describe, the type of captioning to use, and the content of the captions and video description script. In addition, the movie studios, not the movie theater owners and operators, assume the costs of captioning and describing movies. This commenter also said that movie theater owners and operators must only

[8] *See* Report to the Access Board: Refreshed Accessibility Standards and Guidelines in Telecommunications and Electronic and Information Technology (April 2008), *http://www.access-board.gov/sec508/refresh/report/.*

purchase the equipment to display the captions and play the video description in their auditoriums. That said, several commenters stated that movie theater owners and operators rarely exhibit the movies with captions or descriptions. They estimated that less than 1 percent of all movies being exhibited in theaters are actually shown with captions.

The Department has carefully considered this information and acknowledges that significant strides have been made by movie producers in terms of furnishing movies that have the potential to make movies more accessible for individuals with disabilities. Despite these strides, however, the percentage of captioned and video described movies actually exhibited or made available in movie theaters appears to be disproportionately low by comparison. The Department is concerned about what appears to be a significant disconnect between the production of movies that have captioning and video description capabilities and the actual exhibition or availability of such movies to individuals with sensory disabilities. The Department also is concerned that even when captioned and video described movies are exhibited, their showings appear to be relegated to the middle of the week or midday showings. Commenters lamented that individuals with disabilities generally do not have the option of attending movies on days and times (*e.g.,* weekends or evenings) when most other moviegoers see movies because movie theaters usually only show captioned or video described movies during the week at off-peak hours. The Department has not been persuaded that movie theaters have made such significant strides in making the current captioning and video description technology available to moviegoers with disabilities that regulatory action in this area would be unnecessary.

Industry commenters have requested that any regulation regarding captioning and video description be timed to occur after the conversion to digital cinema is complete. The Department is aware that in 2005, the movie industry began transitioning away from the exclusive use of analog films to exhibit movies to a digital mode of movie delivery. However, the completion date of that conversion has remained elusive. One industry commenter said while there has been progress in making the conversion, only approximately 5,000 screens, out of 38,794, have been converted, and the cost to make the remaining conversions involves an investment of several billion dollars. Some commenters have suggested that completion of digital conversion may be 10 or more years in the future. The Department also is concerned that because of the high cost of converting to digital cinema (an industry commenter estimated that the conversion to digital costs between $70,000 and $100,000 per screen and that maintenance costs for digital projectors are estimated to run between $5,000 and $10,000 a year, approximately five times as expensive as the maintenance costs for film projectors) and current economic conditions, a complete conversion to digital cinema may be postponed or may not happen at all. For example, National Public Radio reported that "[f]or more than seven years, film studios and theaters have been hyping digital projectors and the crisp, clear picture quality they'll bring to movie screens. But the vast majority of the nation's cinemas are still using old analog projectors. * * * Despite the clear economic advantages of digital projection of the nation's more than 38,000 movie screens, only 2,200 have digital projectors." All Things Considered, Digital Projection in Theaters Slowed Down by Dispute (Mar. 21, 2007), *available at http://news.wvpubcast.org/templates/transcript/transcript.php?storyId=9047637*.

Whether a complete conversion to digital cinema will occur in a time certain, or not at all, is unknown. Even if the conversion of digital proceeds, until there is a complete digital conversion, at least some theaters will employ analog cinematography (*i.e.,* 35 mm film) to exhibit movies. It is the Department's understanding that currently the vast majority of movie theaters in the United States exhibit film-based movies. Many, however, use a digital sound system (*e.g.,* Digital Theater Systems, Dolby Digital, Sony Dynamic Digital Sound, etc.). Digital sound systems operate independently from analog projectors that deliver the visual portion of a movie. It is also the Department's understanding that the closed captioning and video description technology that is currently available requires a movie theater to have a digital sound system but that digital cinema is not necessary for the captioning and video description technology. Thus, because the Department has not been presented with any substantive information indicating that a complete conversion to digital cinema is necessary to provide individuals with disabilities the opportunity to attend a closed captioned or video described movie, and the date for any complete conversion to digital cinema is unclear, at best, the Department believes that it may be unnecessary and inappropriate to wait to establish rules pertaining to closed captioning and video description for movies.

It appears that existing captioning and video description equipment can be used with digital cinema. Commenters appeared to agree that when theaters move to digital technology, both the caption data and video descriptions can be embedded into the digital signal that is projected. A few commenters said that the systems currently used to provide captioning and video description will not become obsolete once a theater has converted to digital cinema because their major components are compatible with, and can be used by, digital cinema systems. These commenters said that the only difference for a movie theater owner or operator using digital cinema is the way the data are delivered to the captioning and video description equipment in place in an auditorium. In other words, because closed captioning and video description equipment operates through the digital sound systems most theaters have, the fact that those sound systems may be integrated with the digital cinema system will not necessitate changing the captioning and description equipment, only the manner in which the data they project are delivered to the digital cinema system. The Department seeks additional and updated information on this point.

Finally, the Department is considering proposing that 50% of movie screens would offer captioning and video description 5 years after the effective date of the regulation. The Department originally requested guidance on any such figure in its 2008 NPRM. Individuals with disabilities, advocacy groups who represented individuals with disabilities, and eleven State Attorneys General advocated that the Department should require captioning and video description 100% of the time. Representatives from the movie industry did not want any regulation regarding captioning or video description. A representative of a non-profit organization recommended that the Department adopt a requirement that 50% of movies being exhibited be available with captioning and video description. The Department seeks further comment on this issue and is asking several questions regarding how such a requirement should be framed.

IV. Requests for Comments

While the Department has been persuaded by comments from individuals, advocacy groups, governmental entities, and at least some

representatives of the movie industry that the time may be right to issue regulations on captioning and video description at movie theaters, the Department has a series of questions concerning the details of how best to frame and implement any such requirements. The Department believes that input from interested parties and the public would prove to be very useful. Specifically, the Department is seeking additional comment in response to the following questions:

A. Coverage Issues

Question 1. The Department is considering proposing a regulation that contains a sliding compliance schedule whereby the percentage of movie screens offering closed captioning and video description increases on a yearly basis, beginning with 10 percent in the first year any such rule becomes effective, until the 50 percent mark is reached in the fifth year. Please indicate whether this approach achieves the proper balance between providing accessibility for individuals with sensory disabilities and giving movie theaters and owners sufficient time to acquire the technology and equipment necessary to exhibit movies with closed captioning and video descriptions. Also, if you believe that a different compliance schedule should be implemented, please provide a detailed response explaining how this should be accomplished and the reasons in support. Should a different compliance schedule be implemented for small businesses? If so, why? What should that schedule require?

Question 2. The Department is considering proposing regulatory language requiring movie theater owners and operators to exhibit movies with closed captions and movies with video description so that, after any sliding compliance scale has been achieved by the final year (*e.g.,* at year 5), all showings of at least one-half of the movie screens at the theater will offer captioning and video description. We seek comment on the most appropriate basis for calculating the number of movies that will be captioned and video described: Should this be the number of screens located in a particular theater facility, the number of screens owned by a particular movie theater company, the number of different movies being screened in a particular theater facility, or some combination thereof? Should a different basis be used for small business owners? If so, why? What basis should be used? Please include an explanation of the advantages and disadvantages of each option and the reasons a particular option is preferred over another.

Question 3. If the number of screens located in a particular theater facility is the preferred option, please explain whether the fact that some theaters show the same movie on multiple screens poses any concerns with regard to the number of movies being screened with captions and video descriptions, and if so, what they are and whether there are any ways to address those concerns. Does this option pose particular concerns to small businesses? If so, what are they? Please indicate whether the Department should include specific language in the regulation that states that the basis for calculating the number or percentage is the number of captioned and video described movies the theater receives from the movie producers in order to make clear that the owner has no independent obligation to caption or describe movies.

Question 4. If the number of screens owned by a particular movie theater company is the preferred option, please explain whether there are any concerns about the geographic distribution of movies being screened with captions and video descriptions, and if so, what they are and whether there are any ways to address those concerns. Does this option pose particular concerns to small businesses? If so, what are they? Please indicate whether the Department should include specific language in the regulation that states that the basis for calculating the number or percentage of movies is the number of captioned and video described movies the theater receives from the movie producers in order to make clear that the owner has no independent obligation to caption or describe movies.

Question 5. If the number of movies being screened in a particular movie theater facility is the preferred option, please indicate whether the Department should include specific language in the regulation that states that the basis for calculating the number or percentage of movies is the number of captioned and video described movies the theater receives from the movie producers in order to make clear that the owner has no independent obligation to caption or describe movies. Does this option pose particular concerns to small businesses? If so, what are they?

Question 6. If some combination of these three methods is the preferred option, please explain that option and how it would be implemented. Should a different combination or percentage be used for small business owners? If so, why? What combination or percentage should be used for small business owners? Please indicate whether the Department should include specific language in the regulation that states that the basis for calculating the number or percentage is the number of captioned and video described movies the theater receives from the movie producers in order to make clear that the owner has no independent obligation to caption or describe movies.

Question 7. Should any such regulation require that the same number or percentage of movies with video description be exhibited as required for movies with captioning or should a different number or percentage be imposed? If the latter, what would be the justification for distinguishing between these forms of access? Should small businesses use a different ratio or percentage of video described movies or should they also be required to exhibit the same number or percentage of video described and captioned movies as other entities?

Question 8. Should the Department adopt a requirement that movie theater owners and operators exhibit captioned and video described movies beginning on the day of their release? If not, why not (*e.g.,* could such a requirement impose additional burdens and if so, what are they)? Should a different requirement be imposed on small business owners? If so, why? What should that requirement be?

Question 9. While the Department is not considering requiring the use of open captioning, should movie theater owners and operators be given the discretion to exhibit movies with open captioning, should they so desire, as an alternate method of achieving compliance with the captioning requirements of any Department regulation? If theaters opt to use open captioning, should they be required to exhibit movies with such captioning at peak times so that people with disabilities can have the option of going to the movies on days and times when other moviegoers see movies?

B. Digital Cinema

Question 10. How many movie theater owners or operators have converted, in whole or in part, to digital cinema? How many have concrete plans to convert 25 percent of their theaters in the next five years? Next ten years? How many have concrete plans to convert 50 percent of their theaters in the next five years? Next ten years? How many have concrete plans to convert 75 percent of their theaters in the next five years? Next ten years? What are the estimates for the cost for a movie theater to convert a movie auditorium to digital cinema? Are these costs different for small businesses? Have small businesses

entered into any cost-sharing agreements or other financing arrangements to assist in such a conversion?

Question 11. Have specific protocols or standards been developed for captioning and video description for digital cinema and, if so, what are they?

C. Equipment and Technology Questions

Question 12. Do the closed captioning and video description technologies currently available require the use of a digital sound system or digital cinema? Have technologies been developed that do not require the use of either a digital sound system or digital cinema in order to display open or closed captions and offer video description? If any new technologies have been developed, please explain how they work and what, if any, additional costs are associated with the purchase or use of such technologies? Are there technologies in development that will not require the use of a digital sound system or digital cinema in order to display captions or video description? If so, what are they and when are they expected to be available for use by movie theater owners and operators? Please explain what, if any, additional costs are associated with the purchase or use of such technologies.

Question 13. Is the existing closed captioning and video description equipment in use for digital sound systems compatible, or able to be integrated, with digital cinema systems? If not, why not? Are there additional costs associated with using this equipment with digital cinema systems? If so, please provide details. Are the costs different for small businesses? If so, why? What are they?

Question 14. With regard to closed captioning systems, is the ability to read the captions equally good throughout the movie theater or are there certain seats in the theater that provide an enhanced level of readability or line of sight both to the screen and the adjustable panel affixed at or near the patron's seat? If certain seats enable individuals who are deaf or hard of hearing to view movies more effectively, which seats are they and why are they better (*e.g.,* the image is better, there are fewer obstructions, there is less need to continually adjust the panel, etc.)? Should movie theater owners and operators be required to hold such seats for individuals with disabilities who wish to use the theater's closed captioning system? Since movie theater seating is usually first-come, first-serve, is there an effective system that movie theaters would be able to implement to hold back releasing such seats? Should movie theater owners and operators be allowed to release such seats if they are not requested within a certain amount of time before the start of the movie? Should movie theater owners and operators be allowed to release such seats to the general movie going audience once all of the other seats in the theater have been sold out? Are there alternatives for seating that minimize the cost but still provide patrons who are deaf or hard of hearing with effective and efficient readability of the captions and lines of sight to the screen?

Question 15. Are there other factors that the Department should include with regard to the display of captions or the use of video description? What is the cost of purchasing/incorporating video description equipment per screen/theater? Are the costs different for small businesses? If so, why? What are they?

Question 16. Has any specific equipment been developed or is there equipment in development for use with digital cinema that would be necessary to exhibit closed captioned movies or movies with video description? If so, is that equipment included in the general cost of the conversion to digital cinema or is an additional fee imposed? If an additional fee is imposed, please provide details. Are the costs different for small businesses? If so, why? What are they?

Question 17. Are there any other technical requirements that the Department should consider for inclusion in any regulation? If so, please provide details.

D. Notice Requirements

Question 18. Should the Department include a requirement that movie theater owners and operators establish a system for notifying individuals with disabilities in advance of movie screenings as to which movies and shows at its theaters provide captioning and video description? If so, how should such a requirement be structured? For example, should the Department require movie theater owners and operators to include, in their usual movie postings in the newspaper, on telephone recordings, and on the Internet, a notation or some other information that a movie is captioned, the type of captioning provided, or that the movie has video description? Should the Department require movie theater owners and operators to establish a procedure or method for directing individuals with sensory disabilities to where in each movie theater they should go to obtain any necessary captioning and video description equipment? Should movie theater owners and operators have the discretion to determine what notification procedure or method is most appropriate or should the Department specify how and where individuals with disabilities can obtain such equipment at each theater? What are the costs for these types of notifications? Are there any alternative types of notifications possible? Are these costs different for small businesses? If so, why? What are they?

E. Training

Question 19. Should the Department consider including a training requirement for movie theater personnel? Should the Department require that movie theater owners and operators ensure that at least one individual working any shift at which a captioned or video described movie is being screened be trained on how any captioning and video description equipment operates and how to convey that information quickly and effectively to an individual with a disability who seeks help in using that equipment? What are the costs and burdens to implementing such a training requirement? Are these costs different for small businesses? If so, why? What are they? Would written and recorded explanations of how the equipment works be a better alternative?

F. Cost and Benefits of Movie Captioning and Video Description Regulations

Because this is an ANPRM, the Department is not required, at this time, to conduct certain economic analyses or written assessments that otherwise may be required for other more formal types of agency regulatory actions (*e.g.,* notices of proposed rulemaking or final rules) that, for example, are deemed to be economically significant regulatory actions with an annual economic impact exceeding $100 million annually or that are expected to have a significant economic effect on a substantial number of small entities or non-federal governmental jurisdictions (such as State, local, or tribal governments). *See, e.g.,* Regulatory Flexibility Act of 1980, 5 U.S.C. 603–04 (2006); E.O. 13272, 67 FR 53461 (Aug. 13, 2002); E.O. 12866, 58 FR 51735 (Sept. 30, 1993), as amended by E.O. 13497, 74 Fed. Reg. 6113 (Jan. 30, 2009); OMB Budget Circular A–4, *http://www.whitehouse.gov/OMB/circulars/a004/a-4.pdf* (last visited June 5, 2010).

Nonetheless, one of the purposes of this ANPRM is to seek public comment on various topics relating to captioning and video description, including

perspectives from stakeholders concerning the benefits and costs of revising the Department's title III regulation to ensure the accessibility of movies (from both a quantitative and qualitative perspective), particularly from members of the disability community, industry, and governmental entities. The Department thus asks for information so that the Department can determine whether such a proposed rule (1) should be deemed an economically "significant regulatory action" as defined in section 3(f) of E.O. 12866; or (2) would have a significant economic impact on a substantial number of small entities within the meaning of the Regulatory Flexibility Act and, if so, consider suggested alternative regulatory approaches to minimize any such impact.

Consistent with the Regulatory Flexibility Act of 1980 and Executive Order 13272, the Department must consider the impacts of any proposed rule on small entities, including, in pertinent part, small businesses and small nonprofit organizations. *See* 5 U.S.C. 603–04 (2006); E.O. 13272, 67 FR 53461 (Aug. 13, 2002). The Department will make an initial determination as to whether any rule it proposes is likely to have a significant economic impact on a substantial number of small entities, and if so, the Department will prepare an initial regulatory flexibility analysis analyzing the economic impacts on small entities and regulatory alternatives that reduce the regulatory burden on small entities while achieving the goals of the regulation. In response to this ANPRM, the Department encourages small entities to provide cost data on the numbers of small entities that may be impacted by this rule, the potential economic impact of adopting a specific requirement for captioning and video description and recommendations on less burdensome alternatives, with cost information.

Question 20. The Small Business Administration size standard for small movie theatres is $7 million dollars in annual gross revenues. Does the public have estimates of the numbers of small entities that may be impacted by future regulation governed by this ANPRM? How many small entities presently provide movie captioning or video description? How many small entities already have, or have plans to convert to, digital cinema? How many small entities presently have, or plan to convert to, digital sound systems? How much would it cost each small entity to provide movie captioning and video description technology using digital sound? How much would it cost each small entity to provide movie captioning or video description if the entity converted to digital cinema?

Question 21. Currently, what are the general costs per movie theater owner or operator to display movies with closed captioning? How many small entities offer this feature? What are the general costs to small entities to display movies with open or closed captioning? For all entities, is that figure per auditorium, per facility, or per company? Do these costs change for showing IMAX or 3D films with captions? Are there any cost-sharing or cost-allocation agreements that help mitigate these costs for movie theater owners or operators? Is most or all of this expense a one-time fee? If not, please explain.

Question 22. Currently, what are the general costs per movie theater owner or operator to display movies with video description? How many small entities offer this feature? What are the general costs to small entities to display movies with video description? For all entities, is that figure per auditorium, per facility, or per company? Are there any cost-sharing or cost-allocation agreements that help mitigate these costs for movie theater owners or operators? Is most or all of this expense a one-time fee? If not, please explain.

Question 23. Currently, what are the general costs to convert to digital cinema? Are the costs different for small entities? If so, why? What are the costs for small entities? Is that figure per auditorium, per facility, or per company? Are there cost-sharing or cost-allocation agreements that help mitigate these costs for movie theater owners or operators?

Question 24. What impact will the measures being contemplated by the Department requiring captioning and video description of movies have on small entities? Please provide information on: (a) Capital costs for equipment needed to meet the regulatory requirements; (b) costs of modifying existing processes and procedures; (c) any effects to sales and profits, including increases in business due to tapping markets not previously reached; and (d) changes to market competition as a result of the proposed rule.

Question 25. Should any category or type of movie theater be exempted from any regulation requiring captioning or video description? For example, the Department now considers it likely that drive-in theaters will not be subject to this rule because the Department is not aware of any currently available technology that would enable closed captioning or video description of movies shown in drive-in theaters. Are there other types of movie facilities that should be exempted and why?

Question 26. If an exemption is provided, how should such an exemption be structured? Should it be based on the size of the company? To determine size, should the Department consider (a) using the Small Business Size Standard of $7 million dollars in annual gross revenue so that movie theater owners who fall within those parameters should be exempt?; (b) using factors such as whether the movie theater owner is an independent movie house (not owned, leased, or operated by, a movie theater chain), or small art film house in order to be exempt?; or (c) using some other formula or factors to determine if a movie theater owner should be exempt? Should the Department consider the establishment of different compliance requirements or timetables for compliance for small entities, independent movie houses, or small art film houses to take into account the resources available to small entities? What are other alternatives for small businesses, independent move houses, or small art film houses that would minimize the cost of future regulations?

Dated: July 21, 2010.

Thomas E. Perez,

Assistant Attorney General, Civil Rights Division.

[FR Doc. 2010–18337 Filed 7–22–10; 4:15 pm]

BILLING CODE 4410–13–P

DEPARTMENT OF THE INTERIOR

Office of Surface Mining Reclamation and Enforcement

30 CFR Part 926

[SATS No. MT–030–FOR; Docket ID No. OSM–2009–0007]

Montana Regulatory Program

AGENCY: Office of Surface Mining Reclamation and Enforcement, Interior.

ACTION: Proposed rule; reopening and extension of public comment period on proposed amendment.

SUMMARY: We are announcing receipt of revisions pertaining to a previously proposed statutory amendment to the Montana regulatory program (hereinafter, the "Montana program") under the Surface Mining Control and Reclamation Act of 1977 ("SMCRA" or "the Act"). Montana revised its original amendment proposal to remain consistent with SMCRA and Office of Surface Mining Reclamation and Enforcement ("OSM") policy. The

revised amendment pertains to exempting certain small water treatment and other facilities areas from the 10-year revegetation responsibility period. Montana intends to revise its program to be consistent with OSM's interpretation of SMCRA, clarify ambiguities, and to improve operational efficiency.

DATES: We will accept written comments on this amendment until 4 p.m., [m.d.t.] August 25, 2010.

ADDRESSES: You may submit comments, identified by "SATS No. MT–030–FOR" or "Docket ID No. OSM–2009–0007," by any of the following methods:

- *E-mail: cbelka@osmre.gov.* Please include "Docket ID No. OSM–2009–0007" in the subject line of the message.
- *Mail/Hand Delivery/Courier:* Jeffrey Fleischman, Chief, Casper Field Office, Office of Surface Mining, Reclamation and Enforcement, Dick Cheney Federal Building POB 11018, 150 East B Street, Casper, WY 82601–7032, (307) 261–6550.
- *Fax:* (307) 261–6552.
- *Federal eRulemaking Portal: http://www.regulations.gov.* Follow the instructions below for submitting comments.

Instructions: All submissions received must include the agency name and Docket ID No. OSM–2009–0007. For detailed instructions on submitting comments and additional information on the rulemaking process, see the "Public Comment Procedures" heading of the **SUPPLEMENTARY INFORMATION** section of this document.

Docket: Access to the docket, to review copies of the Montana program, this amendment, a listing of any scheduled public hearings, and all written comments received in response to this document, may be obtained at the addresses listed below during normal business hours, Monday through Friday, excluding holidays. You may receive one free copy of the amendment by contacting Office of Surface Mining Reclamation and Enforcement (OSM's) Casper Field Office. In addition, you may review a copy of the amendment during regular business hours at the following locations:

Jeffrey Fleischman, Chief, Casper Field Office, Office of Surface Mining Reclamation and Enforcement, Dick Cheney Federal Building POB 11018, 150 East B Street, Casper, WY 82601–7032, (307) 261–6550, *jfleischman@osmre.gov.*

Edward L. Coleman, Bureau Chief, Industrial and Energy Minerals Bureau, Department of Environmental Quality, P.O. Box 200901, Helena, MT 59620–0901, (406) 444–2544, *ecoleman@mt.gov.*

FOR FURTHER INFORMATION CONTACT: Jeffrey Fleischman, Casper Field Office Director. Telephone: (307) 261–6550. Internet address: *jfleischman@osmre.gov.*

SUPPLEMENTARY INFORMATION:

I. Background on the Montana Program
II. Description of the Proposed Amendment
III. Public Comment Procedures
IV. Procedural Determinations

I. Background on the Montana Program

Section 503(a) of the Act permits a State to assume primacy for the regulation of surface coal mining and reclamation operations on non-Federal and non-Indian lands within its borders by demonstrating that its State program includes, among other things, "a State law which provides for the regulation of surface coal mining and reclamation operations in accordance with the requirements of this Act * * *; and rules and regulations consistent with regulations issued by the Secretary pursuant to this Act." *See* 30 U.S.C. 1253(a)(1) and (7). On the basis of these criteria, the Secretary of the Interior conditionally approved the Montana program on April 1, 1980. You can find background information on the Montana program, including the Secretary's findings, the disposition of comments, and conditions of approval of the Montana program in the April 1, 1980, **Federal Register** (45 FR 21560). You can also find later actions concerning Montana's program and program amendments at 30 CFR 926.15, 926.16, and 926.30.

II. Description of the Proposed Amendment

Montana originally proposed to revise MCA 82–4–235(2), (3), and (4). These statutory provisions all pertain to revegetation and final bond release. We announced receipt of the original proposed amendment in the August 12, 2009, **Federal Register** (74 FR 40537), provided an opportunity for a public hearing or meeting on its substantive adequacy, and invited public comment on its adequacy (Document ID #OSM–2009–0007–0001; Administrative Record No. MT–27–05). Because no one requested a public hearing or meeting, none was held. The public comment period ended on September 11, 2009. We received comments from one Federal agency and one private citizen.

During our review of the amendment, we identified concerns relating to the proposed provisions of the Montana Code Annotated at 82–4–235(3)(a), revegetation responsibility periods. We notified Montana of our concerns by letter dated March 19, 2010 (Document ID #OSM–2009–0007–0006; Administrative Record No. MT–27–08). Montana responded in a letter dated April 12, 2010, by submitting a revised amendment proposal (Document ID #OSM–2009–0007–0007; Administrative Record No. MT–27–09).

OSM's concern with Montana's original proposal was that the provision would have allowed different types of areas to be exempted from the revegetation responsibility period than allowed under OSM's interpretation of SMCRA 515(b)(20). OSM proposed a policy in 1993 to allow State regulatory program amendments which would specify that areas reclaimed following the removal of siltation structures and associated diversions and access roads are not subject to a revegetation responsibility period (58 FR 48333). This allows States to elect to exclude these specific areas from the ten-year responsibility period in order to process bond releases on logical increments or permit areas as a whole. Sedimentation ponds and associated diversions or other siltation structures which are prohibited from being removed until two years after the last augmented seeding, fertilizing, irrigation, or other work need not extend the responsibility period or be divided out to have a separate responsibility period. The policy was adopted on May 29, 1996 (61 FR 26792, 26796).

Montana has revised its proposed statutory language to be consistent with this OSM policy and SMCRA. Proposed MCA 82–4–235(3)(a) now reads:

> (3)(a) Vegetative cover of water management facilities and other support facilities composing no more than 10% of the area for which bond release is sought is not subject to the 10-year responsibility period. Water management facilities and other support facilities include sedimentation ponds, diversions, other water management structures, soils stockpiles, and access roads.

III. Public Comment Procedures

Under the provisions of 30 CFR 732.17(h), we are seeking your comments on whether the amendment satisfies the applicable program approval criteria of 30 CFR 732.15. If we approve the amendment, it will become part of the Montana program.

Electronic or Written Comments

If you submit written comments, they should be specific, confined to issues pertinent to the proposed regulations, and explain the reason for any recommended change(s). We appreciate any and all comments, but those most useful and likely to influence decisions on the final regulations will be those that either involve personal experience

or include citations to and analyses of SMCRA, its legislative history, its implementing regulations, case law, other pertinent Tribal or Federal laws or regulations, technical literature, or other relevant publications.

We cannot ensure that comments received after the close of the comment period (see **DATES**) or sent to an address other than those listed above (see **ADDRESSES**) will be included in the docket for this rulemaking and considered.

Public Availability of Comments

Before including your address, phone number, e-mail address, or other personal identifying information in your comment, you should be aware that your entire comment—including your personal identifying information—may be made publicly available in the electronic docket for this rulemaking at *http://www.regulations.gov.* While you can ask us in your comment to withhold your personal identifying information from public review, we cannot guarantee that we will be able to do so.

IV. Procedural Determinations

Executive Order 12866—Regulatory Planning and Review

This rule is exempted from review by the Office of Management and Budget (OMB) under Executive Order 12866 (Regulatory Planning and Review).

Other Laws and Executive Orders Affecting Rulemaking

When a State submits a program amendment to OSM for review, our regulations at 30 CFR 732.17(h) require us to publish a notice in the **Federal Register** indicating receipt of the proposed amendment, its text or a summary of its terms, and an opportunity for public comment. We conclude our review of the proposed amendment after the close of the public comment period and determine whether the amendment should be approved, approved in part, or not approved. At that time, we will also make the determinations and certifications required by the various laws and executive orders governing the rulemaking process and include them in the final rule.

List of Subjects in 30 CFR Part 926

Intergovernmental relations, Surface mining, Underground mining.

Dated: May 18, 2010.

Allen D. Klein,

Director, Western Region.

[FR Doc. 2010–18231 Filed 7–23–10; 8:45 am]

BILLING CODE P

ENVIRONMENTAL PROTECTION AGENCY

40 CFR Part 271

[EPA–R01–RCRA–2010–0561; FRL–9179–6]

Rhode Island: Final Authorization of State Hazardous Waste Management Program Revisions

AGENCY: Environmental Protection Agency (EPA).

ACTION: Proposed rule.

SUMMARY: The State of Rhode Island has applied to EPA for final authorization of changes to its hazardous waste program under the Resource Conservation and Recovery Act (RCRA). EPA proposes to grant final authorization to Rhode Island. EPA has determined that these changes satisfy all requirements needed to qualify for final authorization, and is authorizing the State's changes through an immediate final action.

DATES: Comments must be received on or before August 25, 2010.

ADDRESSES: Submit your comments, identified by Docket ID No. EPA–R01–RCRA–2010–0561, by one of the following methods:

- *http://www.regulations.gov:* Follow the on-line instructions for submitting comments.
- *E-mail: biscaia.robin@epa.gov.*
- *Fax:* (617) 918–0642, to the attention of Robin Biscaia.
- *Mail:* Robin Biscaia, RCRA Waste Management Section, Office of Site Remediation and Restoration (OSRR 07–1), EPA New England—Region I, 5 Post Office Square, Suite 100, Boston, MA 02109–3912.
- *Hand Delivery or Courier:* Deliver your comments to: Robin Biscaia, RCRA Waste Management Section, Office of Site Restoration and Remediation (OSRR 07–1), EPA New England—Region I, 5 Post Office Square, Suite 100, Boston, MA 02109–3912. Such deliveries are only accepted during the Office's normal hours of operation, and special arrangements should be made for deliveries of boxed information.

For further information on how to submit comments, please see today's immediate final rule published in the "Rules and Regulations" section of this **Federal Register**.

FOR FURTHER INFORMATION CONTACT: Robin Biscaia, RCRA Waste Management Section, Office of Site Remediation and Restoration (OSRR 07–1), EPA New England—Region I, 5 Post Office Square, Suite 100, Boston, MA 02109–3912, telephone number: (617) 918–1642; fax number: (617) 918–0642, e-mail address: *biscaia.robin@epa.gov.*

SUPPLEMENTARY INFORMATION: In the "Rules and Regulations" section of this **Federal Register**, EPA is authorizing the changes by an immediate final rule (except with respect to the zinc fertilizer rule). EPA did not make a proposal prior to the immediate final rule because we believe this action is not controversial and do not expect adverse comments that oppose it. We have explained the reasons for this authorization in the preamble to the immediate final rule. Unless we get written adverse comments which oppose this authorization during the comment period, the immediate final rule will become effective on the date it establishes, and we will not take further action on this proposal. If we get comments that oppose this action, we will withdraw the immediate final rule and it will not take immediate effect. We will then respond to public comments in a later final rule based on this proposal. You may not have another opportunity for comment. If you want to comment on this action, you should do so at this time.

With respect to the zinc fertilizer rule (checklist 200), we think that there may be adverse comments that oppose the Federal authorization of the State for this rule. Thus, we are not including the authorization of the zinc fertilizer rule within the immediate final rule. Rather, we are proposing to authorize Rhode Island for the zinc fertilizer rule in this proposed rule. Any approval of Rhode Island to implement the zinc fertilizer rule will occur only through a later separate final rule, which will be issued only after considering any public comments. Anyone wishing to comment on our proposal to authorize Rhode Island for the zinc fertilizer rule must also do so at this time.

We are proposing to authorize Rhode Island for the zinc fertilizer rule because, through Rules 2.2 C and 2.2 H, Rhode Island has incorporated by reference the Federal zinc fertilizer rule exactly. When a State incorporates by reference Federal requirements exactly, the State is being equivalent to and consistent with the Federal rule. Any commenter opposed to EPA's adoption of the zinc fertilizer rule should have addressed his or her comments to the EPA prior to the Federal adoption of the rule. Any commenter opposed to Rhode Island's adoption of the rule should have addressed his or her comment to Rhode Island before the State adopted the rule. While Rhode Island has the right to be more stringent and not adopt the rule, Rhode Island also has the right not to be more stringent and to adopt the Rule. Commenters wishing a State to be more stringent should make sure to

submit their comments to the State, rather than waiting to ask EPA not to authorize the State for the rule.

Dated: July 7, 2010.

H. Curtis Spalding,

Regional Administrator, EPA New England.

[FR Doc. 2010–18234 Filed 7–23–10; 8:45 am]

BILLING CODE 6560–50–P

DEPARTMENT OF HOMELAND SECURITY

Federal Emergency Management Agency

44 CFR Part 67

[Docket ID FEMA–2010–0003; Internal Agency Docket No. FEMA–B–1139]

Proposed Flood Elevation Determinations

AGENCY: Federal Emergency Management Agency, DHS.

ACTION: Proposed rule.

SUMMARY: Comments are requested on the proposed Base (1% annual-chance) Flood Elevations (BFEs) and proposed BFE modifications for the communities listed in the table below. The purpose of this notice is to seek general information and comment regarding the proposed regulatory flood elevations for the reach described by the downstream and upstream locations in the table below. The BFEs and modified BFEs are a part of the floodplain management measures that the community is required either to adopt or to show evidence of having in effect in order to qualify or remain qualified for participation in the National Flood Insurance Program (NFIP). In addition, these elevations, once finalized, will be used by insurance agents and others to calculate appropriate flood insurance premium rates for new buildings and the contents in those buildings.

DATES: Comments are to be submitted on or before October 25, 2010.

ADDRESSES: The corresponding preliminary Flood Insurance Rate Map (FIRM) for the proposed BFEs for each community is available for inspection at the community's map repository. The respective addresses are listed in the table below.

You may submit comments, identified by Docket No. FEMA–B–1139, to Kevin C. Long, Acting Chief, Engineering Management Branch, Federal Insurance and Mitigation Administration, Federal Emergency Management Agency, 500 C Street, SW., Washington, DC 20472, (202) 646–2820, or (e-mail) *kevin.long@dhs.gov.*

FOR FURTHER INFORMATION CONTACT: Kevin C. Long, Acting Chief, Engineering Management Branch, Federal Insurance and Mitigation Administration, Federal Emergency Management Agency, 500 C Street, SW., Washington, DC 20472, (202) 646–2820, or (e-mail) *kevin.long@dhs.gov.*

SUPPLEMENTARY INFORMATION: The Federal Emergency Management Agency (FEMA) proposes to make determinations of BFEs and modified BFEs for each community listed below, in accordance with section 110 of the Flood Disaster Protection Act of 1973, 42 U.S.C. 4104, and 44 CFR 67.4(a).

These proposed BFEs and modified BFEs, together with the floodplain management criteria required by 44 CFR 60.3, are the minimum that are required. They should not be construed to mean that the community must change any existing ordinances that are more stringent in their floodplain management requirements. The community may at any time enact stricter requirements of its own or pursuant to policies established by other Federal, State, or regional entities. These proposed elevations are used to meet the floodplain management requirements of the NFIP and also are used to calculate the appropriate flood insurance premium rates for new buildings built after these elevations are made final, and for the contents in those buildings.

Comments on any aspect of the Flood Insurance Study and FIRM, other than the proposed BFEs, will be considered. A letter acknowledging receipt of any comments will not be sent.

National Environmental Policy Act. This proposed rule is categorically excluded from the requirements of 44 CFR part 10, Environmental Consideration. An environmental impact assessment has not been prepared.

Regulatory Flexibility Act. As flood elevation determinations are not within the scope of the Regulatory Flexibility Act, 5 U.S.C. 601–612, a regulatory flexibility analysis is not required.

Executive Order 12866, Regulatory Planning and Review. This proposed rule is not a significant regulatory action under the criteria of section 3(f) of Executive Order 12866, as amended.

Executive Order 13132, Federalism. This proposed rule involves no policies that have federalism implications under Executive Order 13132.

Executive Order 12988, Civil Justice Reform. This proposed rule meets the applicable standards of Executive Order 12988.

List of Subjects in 44 CFR Part 67

Administrative practice and procedure, Flood insurance, Reporting and recordkeeping requirements.

Accordingly, 44 CFR part 67 is proposed to be amended as follows:

PART 67—[AMENDED]

1. The authority citation for part 67 continues to read as follows:

Authority: 42 U.S.C. 4001 *et seq.;* Reorganization Plan No. 3 of 1978, 3 CFR, 1978 Comp., p. 329; E.O. 12127, 44 FR 19367, 3 CFR, 1979 Comp., p. 376.

§ 67.4 [Amended]

2. The tables published under the authority of § 67.4 are proposed to be amended as follows:

Flooding source(s)	Location of referenced elevation	* Elevation in feet (NGVD) + Elevation in feet (NAVD) # Depth in feet above ground ∧ Elevation in meters (MSL)		Communities affected
		Effective	Modified	
New London County, Connecticut (All Jurisdictions)				
Eightmile River	Approximately 100 feet upstream of Hamburg Road	None	+56	Town of Lyme.
	Approximately 700 feet upstream of Hamburg Road	None	+57	
Four Mile River	Just upstream of railroad	+9	+10	Town of Old Lyme.
	Approximately 1,200 feet downstream of the breached dam.	+9	+10	

Flooding source(s)	Location of referenced elevation	* Elevation in feet (NGVD) + Elevation in feet (NAVD) # Depth in feet above ground ∧ Elevation in meters (MSL)		Communities affected
		Effective	Modified	
Little River	At the confluence with the Shetucket River	None	+64	Town of Lisbon.
	Approximately 2,400 feet upstream of Inland Road	None	+83	
Long Island Sound	Approximately 1,200 feet west of the intersection of Atlantic Avenue and Bridge Street.	+10	+12	Groton Long Point Association.
Susquetonscut Brook	At the confluence with the Yantic River	None	+119	City of Norwich, Town of Bozrah.
	Approximately 800 feet downstream of Lebanon Road	None	+119	

* National Geodetic Vertical Datum.
+ North American Vertical Datum.
# Depth in feet above ground.
∧ Mean Sea Level, rounded to the nearest 0.1 meter.
** BFEs to be changed include the listed downstream and upstream BFEs, and include BFEs located on the stream reach between the referenced locations above. Please refer to the revised Flood Insurance Rate Map located at the community map repository (see below) for exact locations of all BFEs to be changed.

Send comments to Kevin C. Long, Acting Chief, Engineering Management Branch, Federal Insurance and Mitigation Administration, Federal Emergency Management Agency, 500 C Street, SW., Washington, DC 20472.

ADDRESSES

City of Norwich
Maps are available for inspection at City Hall, 100 Broadway, Norwich, CT 06360.
Groton Long Point Association
Maps are available for inspection at the Town Hall, 44 Beach Road, Groton Long Point, CT 06340.
Town of Bozrah
Maps are available for inspection at the Town Hall, 1 River Road, Bozrah, CT 06334.
Town of Lisbon
Maps are available for inspection at the Town Hall, 1 Newent Road, Lisbon, CT 06351.
Town of Lyme
Maps are available for inspection at the Lyme Town Hall, 480 Hamburg Road, Old Lyme, CT 06371.
Town of Old Lyme
Maps are available for inspection at the Old Lyme Town Hall, 52 Lyme Street, Old Lyme, CT 06371.

Barnstable County, Massachusetts (All Jurisdictions)

Pleasant Bay	From State Route 28 to approximately 700 feet east of State Route 28 and from 350 feet north of Evelyns Drive to approximately 750 feet north of Evelyns Drive.	None	+11	Town of Brewster.

* National Geodetic Vertical Datum.
+ North American Vertical Datum.
# Depth in feet above ground.
∧ Mean Sea Level, rounded to the nearest 0.1 meter.
** BFEs to be changed include the listed downstream and upstream BFEs, and include BFEs located on the stream reach between the referenced locations above. Please refer to the revised Flood Insurance Rate Map located at the community map repository (see below) for exact locations of all BFEs to be changed.

Send comments to Kevin C. Long, Acting Chief, Engineering Management Branch, Federal Insurance and Mitigation Administration, Federal Emergency Management Agency, 500 C Street, SW., Washington, DC 20472.

ADDRESSES

Town of Brewster
Maps are available for inspection at the Town Hall, 2198 Main Street, Brewster, MA 02631.

Essex County, Massachusetts (All Jurisdictions)

Argilla Brook (Backwater effects from Merrimack River).	At the confluence with Johnson Creek	+19	+21	Town of Groveland.
	Approximately 530 feet upstream of Main Street	+20	+21	
Backwater Effects from Harris Brook.	From I–93 to 300 feet west of I–93, and from Hampshire Road to 300 feet north of Hampshire Road at the corporate limits.	None	+111	City of Methuen.
Bartlett Brook	At the confluence with the Merrimack River	+52	+53	City of Methuen.
	Approximately 700 feet upstream of State Route 113	+52	+53	
Boston Brook	Approximately 2,000 feet downstream of Sharpners Pond Road.	None	+82	Town of Middleton.
	Approximately 180 feet downstream of Sharpners Pond Road.	None	+84	

Flooding source(s)	Location of referenced elevation	* Elevation in feet (NGVD) + Elevation in feet (NAVD) # Depth in feet above ground ∧ Elevation in meters (MSL)		Communities affected
		Effective	Modified	
Castle Neck River (Backwater effects from Atlantic Ocean).	Approximately 1.6 mile upstream of the confluence with Ipswich Bay, at the confluence with Hog Island Channel.	None	+9	Town of Ipswich.
Ipswich River	Approximately 800 feet downstream of I–95	+40	+41	Town of Middleton.
	Approximately 1,250 feet upstream of I–95	+40	+41	
Jackman Brook (Backwater effects from Parker River).	Just upstream of Parish Road	+17	+18	Town of Georgetown.
	Approximately 50 feet upstream of Parish Road	+17	+18	
Johnson Creek (Backwater effects from Merrimack River).	At the confluence with the Merrimack River	+19	+21	Town of Groveland.
	Approximately 900 feet upstream of Main Street	+20	+21	
Merrimack River	Approximately 100 feet upstream of Groveland Street	+19	+20	Town of Groveland.
	Approximately 0.67 mile upstream of Groveland Street.	+19	+21	
Merrimack River	Immediately upstream of I–93	+51	+52	City of Methuen.
	Approximately 1.42 mile upstream of the confluence with Fish Brook.	+54	+56	
Nichols Brook (Backwater effects from Ipswich River).	At the confluence with the Ipswich River	+40	+41	Town of Middleton, Town of Topsfield.
World End Pond	Approximately 2,500 feet upstream of the confluence with the Ipswich River.	+40	+41	
	From approximately 1,000 feet north of the intersection of Hayes Street and Pond Street to 2,800 feet north of Hayes Street and Pond Street, and from the end of Argilla Road to 1,300 feet west of Argilla Road at the corporate limits.	None	+116	City of Methuen.

* National Geodetic Vertical Datum.
+ North American Vertical Datum.
# Depth in feet above ground.
∧ Mean Sea Level, rounded to the nearest 0.1 meter.
** BFEs to be changed include the listed downstream and upstream BFEs, and include BFEs located on the stream reach between the referenced locations above. Please refer to the revised Flood Insurance Rate Map located at the community map repository (see below) for exact locations of all BFEs to be changed.

Send comments to Kevin C. Long, Acting Chief, Engineering Management Branch, Federal Insurance and Mitigation Administration, Federal Emergency Management Agency, 500 C Street, SW., Washington, DC 20472.

ADDRESSES

City of Methuen
Maps are available for inspection at the Searles Building, Room 306, 41 Pleasant Street, Methuen, MA 01844.
Town of Georgetown
Maps are available for inspection at the Town Hall, 1 Library Street, Georgetown, MA 01833.
Town of Groveland
Maps are available for inspection at the Town Hall, 183 Main Street, Groveland, MA 01834.
Town of Ipswich
Maps are available for inspection at the Town Hall, 25 Green Street, Ipswich, MA 01938.
Town of Middleton
Maps are available for inspection at the Town Hall, 48 South Main Street, Middleton, MA 01949.
Town of Topsfield
Maps are available for inspection at the Town Hall, 8 West Common Street, Topsfield, MA 01983.

Norfolk County, Massachusetts (All Jurisdictions)

Beaver Brook	Approximately 0.83 mile downstream of Plymouth Street.	None	+161	Town of Weymouth.
	Approximately 0.6 mile downstream of Plymouth Street.	None	+161	
Bubbling Brook	Approximately 1,000 feet upstream of Brook Street	+145	+144	Town of Walpole.
	Approximately 800 feet upstream of North Street	None	+228	
Backwater from the Farm River.	From the Farm River to approximately 1,600 feet upstream of West Street and immediately south of I–93.	None	+120	City of Quincy.
Germany Brook	Approximately 1,500 feet downstream of Winter Street.	None	+169	Town of Norwood.
	At Winter Street	None	+175	
Great Pond Tributary	Just upstream of Randolph Street	None	+161	Town of Weymouth.
	Approximately 400 feet upstream of Randolph Street	None	+161	

Flooding source(s)	Location of referenced elevation	* Elevation in feet (NGVD) + Elevation in feet (NAVD) # Depth in feet above ground ∧ Elevation in meters (MSL)		Communities affected
		Effective	Modified	
Lake Mirimichi	Entire shoreline	None	+161	Town of Foxborough.
Neponset River	Approximately 1.07 mile downstream of Milton Street	None	+44	Town of Dedham.
	Approximately 0.75 mile downstream of Milton Street	None	+44	
Neponset River	Approximately 400 feet downstream of I–95	None	+48	Town of Sharon.
	Just downstream of I–95	None	+48	
New Pond (Backwater effects from Charles River).	Entire shoreline	None	+74	Town of Needham.
Rabbit Hill Pond	At the Rabbit Hill Pond Dam	None	+177	Town of Plainville.
	Approximately 750 feet upstream of the Rabbit Hill Pond Dam.	None	+178	
School Meadow Brook	Approximately 2,000 feet downstream of U.S. Route 1	None	+187	Town of Sharon.
	Approximately 350 feet upstream of U.S. Route 1	None	+188	
Stall Brook	Approximately 750 feet west of the intersection of Alder Street and Trotter Drive.	None	+246	Town of Medway.
	Approximately 350 feet east of the intersection of Route 109 and Green Street.	None	+246	
Walnut Hill Stream	Approximately 400 feet downstream of South Main Street.	+8	+10	Town of Cohasset.
	Approximately 80 feet downstream of South Main Street.	+9	+10	

* National Geodetic Vertical Datum.
+ North American Vertical Datum.
# Depth in feet above ground.
∧ Mean Sea Level, rounded to the nearest 0.1 meter.
** BFEs to be changed include the listed downstream and upstream BFEs, and include BFEs located on the stream reach between the referenced locations above. Please refer to the revised Flood Insurance Rate Map located at the community map repository (see below) for exact locations of all BFEs to be changed.

Send comments to Kevin C. Long, Acting Chief, Engineering Management Branch, Federal Insurance and Mitigation Administration, Federal Emergency Management Agency, 500 C Street, SW., Washington, DC 20472.

ADDRESSES

City of Quincy
Maps are available for inspection at City Hall, 1305 Hancock Street, Quincy, MA 02169.
Town of Cohasset
Maps are available for inspection at the Town Hall, 41 Highland Avenue, Cohasset, MA 02025.
Town of Dedham
Maps are available for inspection at the Town Administration Building, 26 Bryant Street, Dedham, MA 02026.
Town of Foxborough
Maps are available for inspection at the Town Hall, 40 South Street, Foxborough, MA 02035.
Town of Medway
Maps are available for inspection at the Town Hall, 155 Village Street, Medway, 02053.
Town of Needham
Maps are available for inspection at the Town Hall, 1471 Highland Avenue, Needham, MA 02492.
Town of Norwood
Maps are available for inspection at the Town Hall, 566 Washington Street, 2nd Floor, Norwood, MA 02062.
Town of Plainville
Maps are available for inspection at the Town Hall, 142 South Street, Plainville, MA 02762.
Town of Sharon
Maps are available for inspection at the Town Office Building, 90 South Main Street, Sharon, MA 02067.
Town of Walpole
Maps are available for inspection at the Town Hall, 135 School Street, Walpole, MA 02081.
Town of Weymouth
Maps are available for inspection at the Town Hall, 75 Middle Street, Weymouth, MA 02189.

Worcester County, Massachusetts (All Jurisdictions)

Leesville Pond	Entire shoreline	None	+486	City of Worcester.
Ramshorn Pond	Entire shoreline	None	+632	Town of Sutton.
Singletary Pond	Entire shoreline	None	+559	Town of Sutton.
Sudbury River	Approximately 1,200 feet downstream of Fruit Street	None	+264	Town of Westborough.
	Approximately 3,000 feet upstream of Fruit Street	None	+276	
Summet Brook (Backwater effects from Big Bummet Brook).	Approximately 2,800 feet upstream of the confluence with Big Bummet Brook, at the corporate limits.	None	+363	Town of Shrewsbury.
	Approximately 0.6 mile upstream of the confluence with Big Bummet Brook.	None	+363	

Flooding source(s)	Location of referenced elevation	* Elevation in feet (NGVD) + Elevation in feet (NAVD) # Depth in feet above ground ∧ Elevation in meters (MSL)		Communities affected
		Effective	Modified	
Unnamed Tributary (Backwater effects from Cronin Brook).	Approximately 1,100 feet upstream of the confluence with Cronin Brook, at the corporate limits.	None	+331	Town of Millbury.
	Approximately 2,200 feet upstream of the confluence with Cronin Brook.	None	+331	

* National Geodetic Vertical Datum.
+ North American Vertical Datum.
# Depth in feet above ground.
∧ Mean Sea Level, rounded to the nearest 0.1 meter.
** BFEs to be changed include the listed downstream and upstream BFEs, and include BFEs located on the stream reach between the referenced locations above. Please refer to the revised Flood Insurance Rate Map located at the community map repository (see below) for exact locations of all BFEs to be changed.

Send comments to Kevin C. Long, Acting Chief, Engineering Management Branch, Federal Insurance and Mitigation Administration, Federal Emergency Management Agency, 500 C Street, SW., Washington, DC 20472.

ADDRESSES

City of Worcester
Maps are available for inspection at City Hall, 455 Main Street, Room 305, Worcester, MA 01608.
Town of Millbury
Maps are available for inspection at the Town Hall, 127 Elm Street, Millbury, MA 01527.
Town of Shrewsbury
Maps are available for inspection at 100 Maple Avenue, Shrewsbury, MA 01545.
Town of Sutton
Maps are available for inspection at the Town Hall, 4 Uxbridge Road, Sutton, MA 01590.
Town of Westborough
Maps are available for inspection at the Town Hall, 34 West Main Street, Westborough, MA 01581.

Chittenden County, Vermont (All Jurisdictions)

Winooski River	Approximately 0.7 mile upstream of the confluence with Lake Champlain.	+103	+102	City of Burlington, City of South Burlington, City of Winooski, Town of Colchester.
	Approximately 1,200 feet downstream of Main Street/Colchester Avenue.	+117	+116	
Winooski River	Approximately 1,200 feet downstream of I–89	+166	+165	City of South Burlington, Town of Colchester.
	Approximately 1,100 feet upstream of I–89	+166	+167	

* National Geodetic Vertical Datum.
+ North American Vertical Datum.
# Depth in feet above ground.
∧ Mean Sea Level, rounded to the nearest 0.1 meter.
** BFEs to be changed include the listed downstream and upstream BFEs, and include BFEs located on the stream reach between the referenced locations above. Please refer to the revised Flood Insurance Rate Map located at the community map repository (see below) for exact locations of all BFEs to be changed.

Send comments to Kevin C. Long, Acting Chief, Engineering Management Branch, Federal Insurance and Mitigation Administration, Federal Emergency Management Agency, 500 C Street, SW., Washington, DC 20472.

ADDRESSES

City of Burlington
Maps are available for inspection at City Hall, 149 Church Street, Burlington, VT 05401.
City of South Burlington
Maps are available for inspection at the City Hall, 575 Dorset Street, South Burlington, VT 05403.
City of Winooski
Maps are available for inspection at 27 West Allen Street, Winooski, VT 05404.
Town of Colchester
Maps are available for inspection at 781 Blakely Road, Colchester, VT 05446.

(Catalog of Federal Domestic Assistance No. 97.022, "Flood Insurance.")

Dated: July 19, 2010.

Sandra K. Knight,

Deputy Federal Insurance and Mitigation Administrator, Mitigation, Department of Homeland Security, Federal Emergency Management Agency.

[FR Doc. 2010–18196 Filed 7–23–10; 8:45 am]

BILLING CODE 9110–12–P

Notices

Federal Register
Vol. 75, No. 142
Monday, July 26, 2010

This section of the FEDERAL REGISTER contains documents other than rules or proposed rules that are applicable to the public. Notices of hearings and investigations, committee meetings, agency decisions and rulings, delegations of authority, filing of petitions and applications and agency statements of organization and functions are examples of documents appearing in this section.

DEPARTMENT OF AGRICULTURE

Foreign Agricultural Service

Trade Adjustment Assistance for Farmers

AGENCY: Foreign Agricultural Service, USDA.

ACTION: Notice.

The Administrator of the Foreign Agricultural Service (FAS) today accepted and began a review of a petition for trade adjustment assistance filed under the FY 2011 Program by three wool producers on behalf of wool producers in Montana. The Administrator will determine within 40 days whether increasing imports of wool contributed importantly to a greater than 15-percent decrease in the average annual price of wool, quantity or production, value of production, or cash receipts, compared to the average of the 3 preceding marketing years. If the determination is affirmative, producers who produce and market wool in Montana will be eligible to apply to the Farm Service Agency for free technical assistance and cash benefits.

FOR FURTHER INFORMATION CONTACT: Trade Adjustment Assistance for Farmers Staff, FAS, USDA, by phone: (202) 720–0638, or (202) 690–0633; or by e-mail: *tradeadjustment@fas.usda.gov;* or visit the TAA for Farmers' Web site: *http://www.fas.usda.gov/itp/taa.*

Dated: July 14, 2010.

John D. Brewer,

Administrator, Foreign Agricultural Service.

[FR Doc. 2010–17807 Filed 7–23–10; 8:45 am]

BILLING CODE 3410–10–P

DEPARTMENT OF COMMERCE

National Oceanic and Atmospheric Administration

Proposed Information Collection; Comment Request; South Pacific Tuna Act

AGENCY: National Oceanic and Atmospheric Administration (NOAA).

ACTION: Notice.

SUMMARY: The Department of Commerce, as part of its continuing effort to reduce paperwork and respondent burden, invites the general public and other Federal agencies to take this opportunity to comment on proposed and/or continuing information collections, as required by the Paperwork Reduction Act of 1995.

DATES: Written comments must be submitted on or before September 24, 2010.

ADDRESSES: Direct all written comments to Diana Hynek, Departmental Paperwork Clearance Officer, Department of Commerce, Room 6616, 14th and Constitution Avenue, NW., Washington, DC 20230 (or via the Internet at *dHynek@doc.gov*).

FOR FURTHER INFORMATION CONTACT: Requests for additional information or copies of the information collection instrument and instructions should be directed to Raymond P. Clarke, National Marine Fisheries Service, 808–944–2205 or *raymond.clarke@noaa.gov.*

SUPPLEMENTARY INFORMATION:

I. Abstract

This request is for review of an extension of a currently approved collection.

The National Oceanic and Atmospheric Administration (NOAA) collects vessel license, vessel registration, catch, and unloading information from operators of United States (U.S.) purse seine vessels fishing within a large region of the central and western Pacific Ocean. This is governed by the Treaty on Fisheries between the Governments of Certain Pacific Island States and the Government of the United States of America, signed in Port Moresby, Papua New Guinea, in 1987, and its annexes, schedules and implementing agreements, as amended (Treaty). The collection of information is required to meet U.S. obligations under the Treaty.

The Treaty authorizes U.S. tuna vessels to fish within fishing zones of a large region of the Pacific Ocean. The South Pacific Tuna Act of 1988 (16 U.S.C. 973–973r) and U.S. implementing regulations (50 CFR Part 300, Subpart D) authorize the collection of information from participants in the Treaty fishery. Vessel operators who wish to participate in the Treaty Fishery must submit annual vessel license and registration (including registration of vessel monitoring system (VMS) units) applications and periodic written reports of catch and unloading of fish from licensed vessels. They are also required to ensure the continued operation of VMS units on board licensed vessels, which is expected to require periodic maintenance of the units. The information collected is submitted to the Pacific Islands Forum Fisheries Agency (FFA) through the U.S. government, NOAA's National Marine Fisheries Service (NMFS). The license and registration application information is used by the FFA to determine the operational capability and financial responsibility of a vessel operator interested in participating in the Treaty fishery. Information obtained from vessel catch and unloading reports is used by the FFA to assess fishing effort and fishery resources in the region and to track the amount of fish caught within each Pacific island state's exclusive economic zone for fair disbursement of Treaty monies. The maintenance of VMS units is needed to ensure the continuous operation of the VMS units, which, as part of the VMS administered by the FFA, are used as an enforcement tool. If the information is not collected, the U.S. government will not meet its obligations under the Treaty, and the lack of fishing information will result in poor management of the fishery resources.

II. Method of Collection

All forms are to be submitted in hard copy, via mail.

III. Data

OMB Control Number: 0648–0218.
Form Number: None.
Type of Review: Regular submission (extension of a currently approved collection).
Affected Public: Business or other for-profit organizations.
Estimated Number of Respondents: 38.

Estimated Time per Response: License application, 15 minutes; registration application, 45 minutes; catch report, 1 hour; and unloading logsheet, 30 minutes.

Estimated Total Annual Burden Hours: 342.

Estimated Total Annual Cost to Public: $116,052 in recordkeeping/reporting costs.

IV. Request for Comments

Comments are invited on: (a) Whether the proposed collection of information is necessary for the proper performance of the functions of the agency, including whether the information shall have practical utility; (b) the accuracy of the agency's estimate of the burden (including hours and cost) of the proposed collection of information;

(c) ways to enhance the quality, utility, and clarity of the information to be collected; and (d) ways to minimize the burden of the collection of information on respondents, including through the use of automated collection techniques or other forms of information technology.

Comments submitted in response to this notice will be summarized and/or included in the request for OMB approval of this information collection; they also will become a matter of public record.

Dated: July 19, 2010.

Gwellnar Banks,

Management Analyst, Office of the Chief Information Officer.

[FR Doc. 2010–18153 Filed 7–23–10; 8:45 am]

BILLING CODE 3510–22–P

DEPARTMENT OF COMMERCE

Bureau of Industry and Security

Proposed Information Collection; Comment Request; Special Comprehensive License

AGENCY: Bureau of Industry and Security, Commerce

ACTION: Notice.

SUMMARY: The Department of Commerce, as part of its continuing effort to reduce paperwork and respondent burden, invites the general public and other Federal agencies to take this opportunity to comment on proposed and/or continuing information collections, as required by the Paperwork Reduction Act of 1995.

DATES: Written comments must be submitted on or before September 24, 2010.

ADDRESSES: Direct all written comments to Diana Hynek, Departmental Paperwork Clearance Officer, Department of Commerce, Room 6616, 14th and Constitution Avenue, NW., Washington, DC 20230 (or via the Internet at *dHynek@doc.gov).*

FOR FURTHER INFORMATION CONTACT: Requests for additional information or copies of the information collection instrument and instructions should be directed to Larry Hall, BIS ICB Liaison, (202) 482–4895, *lhall@bis.doc.gov.*

SUPPLEMENTARY INFORMATION:

I. Abstract

The Special Comprehensive License (SCL) procedure authorizes multiple shipments of items from the U.S. or from approved consignees abroad who are approved in advance by the Bureau of Industry and Security (BIS) to conduct the following activities: Servicing, support services, stocking spare parts, maintenance, capital expansion, manufacturing, support scientific data acquisition, reselling and reexporting in the form received, and other activities as approved on a case-by-case basis. An application for an SCL requires submission of additional supporting documentation, such as the company's internal control program. This additional information is needed by BIS to ensure that the requirements and the restrictions of this procedure are strictly observed.

II. Method of Collection

Submitted on paper forms.

III. Data

OMB Control Number: 0694–0089.

Form Number(s): BIS–752P and BIS–752P–A.

Type of Review: Regular submission.

Affected Public: Business or other for-profit organizations.

Estimated Number of Respondents: 540.

Estimated Time per Response: 30 minutes to 40 hours.

Estimated Total Annual Burden Hours: 966.

Estimated Total Annual Cost to Public: $0.

IV. Request for Comments

Comments are invited on: (a) Whether the proposed collection of information is necessary for the proper performance of the functions of the agency, including whether the information shall have practical utility; (b) the accuracy of the agency's estimate of the burden (including hours and cost) of the proposed collection of information; (c) ways to enhance the quality, utility, and clarity of the information to be collected; and (d) ways to minimize the burden of the collection of information on respondents, including through the use of automated collection techniques or other forms of information technology.

Comments submitted in response to this notice will be summarized and/or included in the request for OMB approval of this information collection; they also will become a matter of public record.

Dated: July 19, 2010.

Gwellnar Banks,

Management Analyst, Office of the Chief Information Officer.

[FR Doc. 2010–18155 Filed 7–23–10; 8:45 am]

BILLING CODE 3510–33–P

DEPARTMENT OF COMMERCE

Bureau of Industry and Security

Proposed Information Collection; Comment Request; Voluntary Self-Disclosure of Antiboycott Violations

AGENCY: Bureau of Industry and Security, Commerce

ACTION: Notice.

SUMMARY: The Department of Commerce, as part of its continuing effort to reduce paperwork and respondent burden, invites the general public and other Federal agencies to take this opportunity to comment on proposed and/or continuing information collections, as required by the Paperwork Reduction Act of 1995.

DATES: Written comments must be submitted on or before September 24, 2010.

ADDRESSES: Direct all written comments to Diana Hynek, Departmental Paperwork Clearance Officer, Department of Commerce, Room 6616, 14th and Constitution Avenue, NW., Washington, DC 20230 (or via the Internet at *dHynek@doc.gov).*

FOR FURTHER INFORMATION CONTACT: Requests for additional information or copies of the information collection instrument and instructions should be directed to Larry Hall, BIS ICB Liaison, (202) 482–4895, *lhall@bis.doc.gov.*

SUPPLEMENTARY INFORMATION:

I. Abstract

This collection of information supports enforcement of the Antiboycott provisions of the Bureau of Industry and Security's (BIS) Export Administration Regulations (EAR) by providing a method for industry to voluntarily self-disclose antiboycott violations. Companies wishing to voluntarily self-disclose antiboycott may submit pertinent information, as described

under section 764.8 of the EAR. The information collected will allow BIS to conduct investigations of the disclosed incidents more immediately by than would be the case if BIS had to detect the violations without such disclosures.

II. Method of Collection

Submitted in paper form.

III. Data

OMB Control Number: 0694–0132.

Form Number(s): None.

Type of Review: Regular submission.

Affected Public: Business or other for-profit organizations.

Estimated Number of Respondents: 10.

Estimated Time per Response: 10 to 600 hours (depending on the size of the company).

Estimated Total Annual Burden Hours: 1,280.

Estimated Total Annual Cost to Public: $0.

IV. Request for Comments

Comments are invited on: (a) Whether the proposed collection of information is necessary for the proper performance of the functions of the agency, including whether the information shall have practical utility; (b) the accuracy of the agency's estimate of the burden (including hours and cost) of the proposed collection of information; (c) ways to enhance the quality, utility, and clarity of the information to be collected; and (d) ways to minimize the burden of the collection of information on respondents, including through the use of automated collection techniques or other forms of information technology.

Comments submitted in response to this notice will be summarized and/or included in the request for OMB approval of this information collection; they also will become a matter of public record.

Dated: July 21, 2010.

Gwellnar Banks,

Management Analyst, Office of the Chief Information Officer.

[FR Doc. 2010–18161 Filed 7–23–10; 8:45 am]

BILLING CODE 3510–33–P

DEPARTMENT OF COMMERCE

National Oceanic and Atmospheric Administration

Proposed Information Collection; Comment Request; Vessel Monitoring System Requirements in Western Pacific Pelagic and Bottomfish Fisheries

AGENCY: National Oceanic and Atmospheric Administration (NOAA).

ACTION: Notice.

SUMMARY: The Department of Commerce, as part of its continuing effort to reduce paperwork and respondent burden, invites the general public and other Federal agencies to take this opportunity to comment on proposed and/or continuing information collections, as required by the Paperwork Reduction Act of 1995.

DATES: Written comments must be submitted on or before September 24, 2010.

ADDRESSES: Direct all written comments to Diana Hynek, Departmental Paperwork Clearance Officer, Department of Commerce, Room 6616, 14th and Constitution Avenue, NW., Washington, DC 20230 (or via the Internet at *dHynek@doc.gov*).

FOR FURTHER INFORMATION CONTACT: Requests for additional information or copies of the information collection instrument and instructions should be directed to Walter Ikehara, (808) 944–2275 or *Walter.Ikehara@noaa.gov*.

SUPPLEMENTARY INFORMATION:

I. Abstract

This request is for a revision of a currently approved information collection. As part of fishery management plans developed under the authority of the Magnuson-Stevens Fishery Conservation and Management Act (MSA), owners of commercial fishing vessels in the Hawaii pelagic longline fishery, American Samoa pelagic longline fishery (only vessels longer than 50 feet), and Northern Mariana Islands bottomfish fishery (only vessels longer than 40 feet) must allow the National Oceanic and Atmospheric Administration (NOAA) to install vessel monitoring system (VMS) units on their vessels when directed to do so by NOAA enforcement personnel. VMS units automatically send periodic reports on the position of the vessel. NOAA uses the reports to monitor the vessel's location and activities, primarily to enforce regulated fishing areas. NOAA pays for the units and messaging. There is no public burden for the automatic messaging; however, VMS installation and annual maintenance are considered public burden.

This request combines three OMB approved collections for VMS requirements, OMB Control No. 0648–0441 (Vessel Monitoring System Requirements in the Western Pacific Pelagic Longline Fishery), OMB Control No. 0648–0519 (Vessel Monitoring System Requirement for American Samoa Pelagic Longline Fishery), and the VMS requirement from OMB Control No. 0648–0584 (Permitting, Vessel Identification and Vessel Monitoring System Requirements for the Commercial Bottomfish Fishery in the Commonwealth of the Northern Mariana Islands), into one collection (OMB Control No. 0648–0441).

II. Method of Collection

Automatic.

III. Data

OMB Control Number: 0648–0441.

Form Number: None.

Type of Review: Regular submission (revision of a currently approved information collection).

Affected Public: Business or other for-profit organizations.

Estimated Number of Respondents: 209.

Estimated Time per Response: 4 hours for installation or replacement of a VMS unit; 2 hours for annual maintenance.

Frequency: Annually and on occasion.

Respondent's Obligation: Mandatory.

Estimated Total Annual Burden Hours: 478 (estimated 15 installations per year).

Estimated Total Annual Cost to Public: $0 in recordkeeping/reporting costs.

IV. Request for Comments

Comments are invited on: (a) Whether the proposed collection of information is necessary for the proper performance of the functions of the agency, including whether the information shall have practical utility; (b) the accuracy of the agency's estimate of the burden (including hours and cost) of the proposed collection of information; (c) ways to enhance the quality, utility, and clarity of the information to be collected; and (d) ways to minimize the burden of the collection of information on respondents, including through the use of automated collection techniques or other forms of information technology.

Comments submitted in response to this notice will be summarized and/or included in the request for OMB approval of this information collection; they also will become a matter of public record.

Dated: July 21, 2010.

Gwellnar Banks,

Management Analyst, Office of the Chief Information Officer.

[FR Doc. 2010–18205 Filed 7–23–10; 8:45 am]

BILLING CODE 3510–22–P

DEPARTMENT OF COMMERCE

International Trade Administration

[C–533–821]

Certain Hot-Rolled Carbon Steel Flat Products From India: Final Results of Countervailing Duty Administrative Review

AGENCY: Import Administration, International Trade Administration, Department of Commerce.

SUMMARY: On January 11, 2010, the U.S. Department of Commerce (the Department) published in the **Federal Register** its preliminary results of the administrative review of the countervailing duty (CVD) order on certain hot-rolled carbon steel flat products (hot-rolled carbon steel) from India for the period of review (POR) January 1, 2008, through December 31, 2008. *See Certain Hot-Rolled Carbon Steel Flat Products from India: Preliminary Results of Countervailing Duty Administrative Review;* 75 FR 1495 (January 11, 2010) (*Preliminary Results*). We preliminarily found that Tata Steel Limited (Tata) received countervailable subsidies during the POR. We received comments on our *Preliminary Results* from the Government of India (GOI), petitioners, and the respondent company, Tata.[1] The final results are listed in the section "Final Results of Review" below.

DATES: *Effective Date:* July 26, 2010.

FOR FURTHER INFORMATION CONTACT: Gayle Longest at (202) 482–3338, AD/CVD Operations, Office 3, Import Administration, International Trade Administration, U.S. Department of Commerce, 14th Street and Constitution Ave., NW., Washington, DC 20230.

SUPPLEMENTARY INFORMATION:

Background

On December 3, 2001, the Department published in the **Federal Register** the CVD order on certain hot-rolled carbon steel flat products from India. *See Notice of Amended Final Determination and Notice of Countervailing Duty Order: Certain Hot-Rolled Carbon Steel Flat Products from India,* 66 FR 60198 (December 3, 2001). On February 2, 2009, the Department initiated an administrative review covering Essar Steel Limited (Essar), Ispat Industries Limited (Ispat), JSW Steel Limited (JSW), and Tata. *See Initiation of Antidumping and Countervailing Duty Administrative Reviews and Requests for Revocation in Part,* 74 FR 5821 (February 2, 2009) (*Initiation*). As a result of withdrawals of request for review, the Department rescinded this review, in part, with respect to Essar, Ispat, and JSW. *See Certain Hot-Rolled Carbon Steel Flat Products from India: Partial Rescission of Countervailing Duty Administrative Review,* 74 FR 26847 (June 4, 2009).

On January 11, 2010, the Department published in the **Federal Register** its *Preliminary Results* of the administrative review of this order for the period January 1, 2008, through December 31, 2008. *See Preliminary Results,* 75 FR 1495. In accordance with 19 CFR 351.213(b), this administrative review covers Tata, a producer and exporter of subject merchandise.

In the *Preliminary Results,* we invited interested parties to submit briefs or request a hearing. On February 12, 2010, we received comments from the GOI and Tata. On February 19, 2010, we received rebuttal comments from petitioners.

Scope of Order

The merchandise subject to this order is certain hot-rolled carbon-quality steel products of a rectangular shape, of a width of 0.5 inch or greater, neither clad, plated, nor coated with metal and whether or not painted, varnished, or coated with plastics or other non-metallic substances, in coils (whether or not in successively superimposed layers), regardless of thickness, and in straight lengths, of a thickness of less than 4.75 mm and of a width measuring at least 10 times the thickness. Universal mill plate (*i.e.,* flat-rolled products rolled on four faces or in a closed box pass, or a width exceeding 150 mm, but not exceeding 1250 mm, and of a thickness of not less than 4 mm, not in coils and without patterns in relief) of a thickness not less than 4.0 mm is not included within the scope of this order.

Specifically included in the scope of this order are vacuum degassed, fully stabilized (commonly referred to as interstitial-free (IF) steels, high-strength low-alloy (HSLA) steels, and the substrate for motor lamination steels. IF steels are recognized as low-carbon steels with micro-alloying levels of elements such as titanium or niobium (also commonly referred to as columbium), or both, added to stabilize carbon and nitrogen elements. HSLA steels are recognized as steels with micro-alloying levels of elements such as chromium, copper, niobium, vanadium, and molybdenum. The substrate for motor lamination steels contains micro-alloying levels of elements such as silicon and aluminum.

Steel products included in the scope of this order, regardless of definitions in the Harmonized Tariff Schedule of the United States (HTS), are products in which: (i) Iron predominates, by weight, over each of the other contained elements; (ii) the carbon content is 2 percent or less, by weight; and (iii) none of the elements listed below exceeds the quantity, by weight, respectively indicated:

1.80 percent of manganese, or
2.25 percent of silicon, or
1.00 percent of copper, or
0.50 percent of aluminum, or
1.25 percent of chromium, or
0.30 percent of cobalt, or
0.40 percent of lead, or
1.25 percent of nickel, or
0.30 percent of tungsten, or
0.10 percent of molybdenum, or
0.10 percent of niobium, or
0.15 percent of vanadium, or
0.15 percent of zirconium.

All products that meet the physical and chemical description provided above are within the scope of this order unless otherwise excluded. The following products, by way of example, are outside or specifically excluded from the scope of this order.

- Alloy hot-rolled steel products in which at least one of the chemical elements exceeds those listed above (including, *e.g.,* ASTM specifications A543, A387, A514, A517, A506).
- SAE/AISI grades of series 2300 and higher.
- Ball bearings steels, as defined in the HTS.
- Tool steels, as defined in the HTS.
- Silico-manganese (as defined in the HTS) or silicon electrical steel with a silicon level exceeding 2.25 percent.
- ASTM specifications A710 and A736.
- USS Abrasion-resistant steels (USS AR 400, USS AR 500).
- All products (proprietary or otherwise) based on an alloy ASTM specification (sample specifications: ASTM A506, A507).
- Non-rectangular shapes, not in coils, which are the result of having been processed by cutting or stamping and which have assumed the character of articles or products classified outside chapter 72 of the HTS.

The merchandise subject to this order is currently classifiable in the HTS at

[1] Petitioners are the United States Steel Corporation and Nucor Corporation (collectively, petitioners).

subheadings: 7208.10.15.00, 7208.10.30.00, 7208.10.60.00, 7208.25.30.00, 7208.25.60.00, 7208.26.00.30, 7208.26.00.60, 7208.27.00.30, 7208.27.00.60, 7208.36.00.30, 7208.36.00.60, 7208.37.00.30, 7208.37.00.60, 7208.38.00.15, 7208.38.00.30, 7208.38.00.90, 7208.39.00.15, 7208.39.00.30, 7208.39.00.90, 7208.40.60.30, 7208.53.00.00, 7208.54.00.00, 7208.90.00.00, 7211.14.00.90, 7211.19.15.00, 7211.19.20.00, 7211.19.30.00, 7211.19.45.00, 7211.19.60.00, 7211.19.75.30, 7211.19.75.60, and 7211.19.75.90. Certain hot-rolled flat-rolled carbon-quality steel covered by this order, including: Vacuum-degassed fully stabilized; high-strength low-alloy; and the substrate for motor lamination steel may also enter under the following tariff numbers: 7225.11.00.00, 7225.19.00.00, 7225.30.30.50, 7225.30.70.00, 7225.40.70.00, 7225.99.00.90, 7226.11.10.00, 7226.11.90.30, 7226.11.90.60, 7226.19.10.00, 7226.19.90.00, 7226.91.50.00, 7226.91.70.00, 7226.91.80.00, and 7226.99.00.00. Subject merchandise may also enter under 7210.70.30.00, 7210.90.90.00, 7211.14.00.30, 7212.40.10.00, 7212.40.50.00, and 7212.50.00.00. Although the HTS subheadings are provided for convenience and customs purposes, the Department's written description of the merchandise subject to this order is dispositive.

Period of Review

The POR for which we are measuring subsidies is from January 1, 2008, through December 31, 2008.

Analysis of Comments

On February 12, 2010 the GOI and Tata filed comments. On February 19, 2010, petitioners filed rebuttal comments. All issues in the respondents' and petitioners' case and rebuttal briefs are addressed in the accompanying Issues and Decision Memorandum for the Countervailing Duty Administrative Review on Certain Hot-Rolled Carbon Steel Flat Products from India (Decision Memorandum), which is hereby adopted by this notice. A listing of the issues that parties raised and to which we have responded is attached to this notice as Appendix I. Parties can find a complete discussion of the issues raised in this review and the corresponding recommendations in this public memorandum, which is on file in the Central Records Unit (CRU) of the main commerce building. In addition, a complete version of the Decision Memorandum can be accessed directly on the World Wide Web at *http://ia.ita.doc.gov/frn.*

The paper copy and the electronic version of the Decision Memorandum are identical in content.

Final Results of Review

After reviewing comments from all parties, we have made adjustments to our calculations as explained in our Decision Memorandum. Consistent with the *Preliminary Results,* we find that Tata received countervailable subsidies during the POR.

Company	*Total net countervailable subsidy rate*
Tata Steel Limited	577.28 percent *ad valorem.*

Assessment Rates/Cash Deposits

The Department intends to issue assessment instructions to U.S. Customs and Border Protection (CBP) 15 days after the date of publication of these final results of review to liquidate shipments of subject merchandise by Tata entered, or withdrawn from warehouse, for consumption on or after January 1, 2008, through December 31, 2008, at the *ad valorem* rate listed above. We will also instruct CBP to collect cash deposits for the respondent at the countervailing duty rate indicated above on all shipments of the subject merchandise entered, or withdrawn from warehouse, for consumption on or after the date of publication of these final results of review.

For all non-reviewed companies, the Department will instruct CBP to assess countervailing duties at the cash deposit rates in effect at the time of entry, for entries between January 1, 2008, and December 31, 2008. The cash deposit rates for all companies not covered by this review are not changed by the results of this review.

Return or Destruction of Proprietary Information

This notice serves as a reminder to parties subject to administrative protective order (APO) of their responsibility concerning the disposition of proprietary information disclosed under APO in accordance with 19 CFR 351.305(a)(3). Timely written notification of return or destruction of APO materials or conversion to judicial protective order is hereby requested. Failure to comply with the regulations and the terms of an APO is a sanctionable violation.

We are issuing and publishing these results in accordance with sections 751(a)(1) and 777(i)(1) of the Tariff Act of 1930, as amended.

Dated: July 19, 2010.

Ronald K. Lorentzen,

Deputy Assistant Secretary for Import Administration.

Appendix I—Issues and Decision Memorandum

I. *Adverse Facts Available (AFA)*
- A. The GOI
- B. Tata

II. *Analysis of Programs*
- A. Programs Administered by the Government of India
- 1. Pre- and Post-Shipment Export Financing
- 2. Export Promotion Capital Goods Scheme (EPCGS)
- 3. Advance License Program (ALP)
- 4. Duty Entitlement Passbook Scheme (DEPS)
- 5. Status Certificate Program
- 6. Loan Guarantees From the GOI
- 7. Steel Development Fund (SDF) Loans
- 8. Captive Mining of Iron Ore
- 9. Captive Mining Rights of Coal
- 10. Export Oriented Units (EOU) Program: Duty-Free Import of Capital Goods and Raw Materials
- 11. EOU Program: Reimbursement of Central Sales Tax (CST) Paid on Materials Procured Domestically
- 12. Sale of High-Grade Iron Ore for Less Than Adequate Remuneration (LTAR)
- 13. Market Development Assistance (MDA)
- 14. Market Access Initiative (MAI)
- 15. Special Economic Zone Act of 2005 (SEZ Act): Duty Free Import/Domestic Procurement of Goods and Services for Development, Operation, and Maintenance of SEZ Units Program
- 16. SEZ Act: Exemption From Excise Duties on Goods Machinery and Capital Goods Brought From the Domestic Tariff Area for Use by an Enterprise in the SEZ
- 17. SEZ Act: Drawback on Goods Brought or Services Provided From the Domestic Tariff Area Into a SEZ, or Services Provided in a SEZ by Service Providers Located Outside India
- 18. SEZ Act: 100 Percent Exemption From Income Taxes on Export Income From the First 5 Years of Operation, 50 Percent for the Next 5 Years, and a Further 50 Percent Exemption on Export Income Reinvested in India for an Additional 5 Years
- 19. SEZ Act: Exemption From the Central Sales Tax (CST)
- 20. SEZ Act: Exemption From the National Service Tax
- 21. Duty Free Replenishment Certificate (DFRC) Scheme
- 22. Target Plus Scheme (TPS)
- B. Programs Administered by the State Government of Gujarat
- 1. State Government of Gujarat (SGOG) Tax Incentives: Sales Tax Exemptions of Purchases of Goods During the POR
- 2. State Government of Gujarat (SGOG) Tax Incentives: Deferrals on Purchases of Goods From Prior Years (as Well as Deferrals Granted During the POR

3. State Government of Gujarat (SGOG) Tax Incentives: Value Added Tax (VAT)
4. Gujarat Special Economic Zone Act (SGOG SEZ Act): Stamp Duty and Registration Fees for Land Transfers, Loan Agreements, Credit Deeds, and Mortgages
5. SGOG SEZ Act: Sales Tax, Purchase Tax, and Other Taxes Payable on Sales and Transactions
6. SGOG SEZ Act: Sales and Other State Taxes on Purchases of Inputs (Both Goods and Services) for the SEZ or a Unit within the SEZ
C. Programs Administered by the State Government of Maharashtra (SGOM)
1. Sales Tax Program
2. VAT Tax Refunds Under the SGOM Package Scheme of Incentives and the Maharashtra New Package Scheme of Incentives
3. Electricity Duty Exemption Under the Package Scheme of Incentives for 1993
4. Refunds of Octroi Under the PSI of 1993, Maharashtra Industrial Policy (MIP of 2001), and Maharashtra Industrial Policy (MIP of 2006)
5. Loan Guarantees Based on Octroi Refunds by SGOM
6. Infrastructure Assistance for Mega Projects
7. Land for Less Than Adequate Remuneration
8. Investment Subsidy
D. Programs Administered by the State Government of Andhra Pradesh (SGAP)
1. Grant Under the Industrial Investment Promotion Policy of 2005–2010 (Andhra Pradesh IP): 25 Percent Reimbursement of Cost of Land in Industrial Estates and Industrial Development Areas
2. Grant Under the Andhra Pradesh IP: Reimbursement of Power at the Rate of Rs. 0.75 "Per Unit" for the Period Beginning April 1, 2005, through March 31, 2006 and for the Four Years Thereafter to be Determined by the Government of Andhra Pradesh (GOAP)
3. Grant Under the Andhra Pradesh IP: A 50 Percent Subsidy for Expenses Incurred for Quality Certification Up to RS. 100 Lakhs
4. Grant Under the Andhra Pradesh IP: A 25 Percent Subsidy on "Cleaner Production Measures" Up to Rs. 5 Lakhs
5. Grant Under the Andhra Pradesh IP: A 50 Percent Subsidy on Expenses Incurred in Patent Registration, up to Rs. 5 Lakhs
6. Tax Incentives Under the Andhra Pradesh IP: 100 Percent Reimbursement of Stamp Duty and Transfer Duty Paid for the Purchase of Land and Buildings and the Obtaining of Financial Deeds and Mortgages
7. Tax Incentives Under the Andhra Pradesh IP: A Grant of 25 Percent of the Tax Paid to SGAP, Which is Applied as a Credit Against the Tax Owed the Following Year, for a Period of Five Years From the Date of Commencement of Production
8. Tax Incentives Under the Andhra Pradesh IP: Exemption From the SGAP Non-agricultural Land Assessment (NALA)
9. Provision of Goods/Services for Less Than Adequate Remuneration Under the Andhra Pradesh IP: Provision of Infrastructure for Industries Located More Than 10 Kilometers From Existing Industrial Estates or Industrial Development Areas
E. Programs Administered by the State Government of Chhattisgarh (SGOC)
1. Grant Under the Chhattisgarh Industrial Policy 2004–2009 (CIP): A Direct Subsidy of 35 Percent of Total Capital Cost for the Project, up to a Maximum Amount Equivalent to the Amount of Commercial Tax/Central Sales Tax Paid in a Seven Year Period
2. Grant Under the CIP: A Direct Subsidy of 40 Percent Toward Total Interest Paid for a Period of 5 Years (up to Rs. Lakh per Year) on Loans and Working Capital for Upgrades in Technology
3. Grant Under the CIP: Reimbursement of 50 Percent of Expenses (up to Rs. 75,000) Incurred for Quality Certification
4. Grant Under the CIP: Reimbursement of 50 Percent of Expenses (up to 5 Lakh) for Obtaining Patents
5. Tax Incentives Under the CIP: Total Exemption From Electricity Duties for a Period of 15 Years From the Date of Commencement of Commercial Production
6. Tax Incentives Under the CIP: Exemption from Stamp Duty on Deeds Executed for Purchase or Lease of Land and Buildings and Deeds Relating to Loans and Advances To Be Taken by the Company for a Period of Three Years From the Date of Registration
7. Tax Incentives Under the CIP: Exemption From Payment of Entry Tax for 7 Years (Excluding Minerals Obtained from Mining in the State)
8. Tax Incentives Under the CIP: A 50 Percent Reduction of the Service Charges for Acquisition of Private Land by Chhattisgarh Industrial Development Corporation for Use by the Company
9. Land for Less Than Adequate Remuneration (LTAR) Under CIP
F. Programs Administered by the State Government of Jharkland (SGOJ)
1. Tax Incentives Under the Jharkhand State Industrial Policy (JSIP) of 2001: Exemption of Electricity Duties
2. Tax Incentives Under the JSIP: Offset of Jharkhand Sales Tax (JST)
3. Grants Under the JSIP: Capital Investment Incentive
4. Grants Under the JSIP: Capital Power Generating Subsidy
5. Grants Under the JSIP: Interest Subsidy
6. Tax Incentives Under the JSIP: Stamp Duty and Registration
7. Grants Under the JSIP: Feasibility Study and Project Report Cost Reimbursement
8. Grants Under the JSIP: Pollution Control Equipment Subsidy
9. Grants Under the JSIP: Incentive for Quality Certification
10. Infrastructure Subsidies to Mega Projects: Tax Incentives
11. Infrastructure Subsidies to Mega Projects: Grants
12. Infrastructure Subsidies to Mega Projects: Loans
13. Employment Incentives Under the JSIP
G. Programs Administered by the State Government of Karnataka (SGOK)
1. SGOK's New Industrial Policy and Package of Incentives and Concessions of 1993 (1993 KIP): Tax Incentives
2. 1993 KIP: Land at Less Than Adequate Remuneration
3. 1993 KIP: Iron Ore, Limestone, and Dolomite at Less Than Adequate Remuneration
4. 1993 KIP: Power/Electricity at Less Than Adequate Remuneration
5. 1993 KIP: Water at Less Than Adequate Remuneration
6. 1993 KIP: Roads and Other Infrastructure at Less Than Adequate Remuneration
7. 1993 KIP: Port Facilities at Less Than Adequate Remuneration
8. 1993 KIP: Grants
9. 1993 KIP: Loans
10. 1993 KIP: Tax Incentives
11. SGOK's New Industrial Policy and Package of Incentives and Concessions of 1996 (1996 KIP): Loans
12. 1996 KIP: Grants
13. 1996 KIP: Provision of Goods and Services at Less Than Adequate Remuneration (LTAR)
14. SGOK's New Industrial Policy and Package of Incentives and Concessions of 2001 (2001 KIP): Tax Incentives
15. 2001 KIP: Loans
16. 2001 KIP: Grants
17. 2001 KIP: Provision of Goods and Services at Less Than Adequate Remuneration (LTAR)
18. SGOK's New Industrial Policy and Package of Incentives and Concessions of 2006 (2006 KIP): Loans
19. 2006 KIP: Tax Incentives
20. 2006 KIP: Provision of Goods and Services for Less Than Adequate Remuneration (LTAR)
21. 2006 KIP: Grants

Programs Determined To Be Terminated

1. Exemption of Export Credit From Interest Taxes
2. *Income Tax Exemption Scheme Under Section (80 HHC)*

III. *Analysis of Comments*

Comment 1: Whether The State Government Of Jharkhand (SGOJ) Cooperated To The Best Of Its Ability And Should Not Be Subject To The AFA Rate That The Department Preliminarily Applied To The SGOJ Programs

Comment 2: Whether The Programs Covered In The Review Have Provided Countervailable Benefits To Indian Exporters

Comment 3: Whether The Department Should Have Held Consultations With The GOI Before Including Many Of The Programs In Its Administrative Review

Comment 4: Whether The Application of The Adverse Facts Available (AFA) Standard Is Inconsistent With Article 12/7 Of WTO's ASCM

Comment 5: Whether The AFA Rates Arrived At For The SGOJ Programs Have No Rational Connection To Tata's Operations And Are Improper

Comment 6: Whether The Application Of

AFA Rates To Programs Administered By The State Governments Contradicts The Department's Prior Determinations In This Proceeding
Comment 7: Whether The Department's Calculation Methodology Is Incorrect As It Improperly Summed The Total Of The GOI And State-Government AFA Rates Without Properly Accounting For The Percentage Of Tata's Total Turnover That The State Programs Could Have Applied To
Comment 8: Whether The Department Made A Clerical Error In The Calculation Of The AFA Rate For SGOJ Programs
Comment 9: Whether The Department's Discretion In Selecting AFA Margins Is Limited By The Requirement That Margins Be Reasonable, Reasonably Accurate Estimates Of Actual Margins, And Rationally Related To Practices In The Industry
Comment 10: Whether The AFA Margin From The Preliminary Results Is An Abuse Of The Department's Discretion Because It Is Claimed To Be Unreasonable, Anomalous, And Unrelated To The Country, The Industry, Or The Company
Comment 11: Whether The 586.43% Preliminary Margin Is Unlawful Because It Is Excessively High And Therefore Punitive
Comment 12: Whether The Department Improperly Applied To Tata Steel Numerous State Programs Relating To States Where Tata Steel Is Not Located
IV. *Total Net Subsidy Rate*
V. *Recommendation*

[FR Doc. 2010–18244 Filed 7–23–10; 8:45 am]

BILLING CODE 3510–DS–P

DEPARTMENT OF COMMERCE

National Oceanic and Atmospheric Administration

RIN: 0648–XX78

Western Pacific Fishery Management Council; Public Meetings

AGENCY: National Marine Fisheries Service (NMFS), National Oceanic and Atmospheric Administration (NOAA), Commerce.

ACTION: Notice of public informational scoping meetings.

SUMMARY: The Western Pacific Fisheries Management Council (Council) will convene public informational scoping meetings in Guam and CNMI to solicit comments on the management of the bottomfish fishery within the EEZ of the Mariana Islands. The scope meeting will, among other things, describe the existing federal management regime for bottomfish species, examine the current performance of the fishery and consider the need for potential regulatory changes.

DATES: Public informational scoping meetings will be held in Saipan, CNMI on August 11, 2010 and in Guam August 13, 2010. See **SUPPLEMENTARY INFORMATION** for specific dates, times, and locations.

ADDRESSES: Written comments on this issue may be sent to Kitty M. Simonds, Executive Director, Western Pacific Fishery Management Council, 1164 Bishop St., Suite 1400, Honolulu, HI 96813.

Comments may be sent to the Council via facsimile (fax) at (808) 522–8226.

FOR FURTHER INFORMATION CONTACT: Kitty M. Simonds, Executive Director, WPFMC, (808) 522–8220.

SUPPLEMENTARY INFORMATION: Dates, Times, and Locations for Public Informational Scoping Meetings

1. Saipan, CNMI -- Wednesday, August 11, 2010, from 5 p.m. - 9 p.m. at the Saipan Multipurpose Center.

2. Hagatna, Guam -- Friday, August 13, 2010, from 5 p.m. - 9 p.m. at the Guam Fishermen's Cooperative

Special Accommodations

These meetings are physically accessible to people with disabilities. Requests for sign language interpretation or other auxiliary aids should be directed to Kitty M. Simonds, (808) 522–8220 (voice) or (808) 522–8226 (fax), at least 5 days prior to the meeting date.

Authority: 16 U.S.C. 1801 *et seq.*

Dated: July 21, 2010.

William D. Chappell,

Acting Director, Office of Sustainable Fisheries, National Marine Fisheries Service.

[FR Doc. 2010–18252 Filed 7–23–10; 8:45 am]

BILLING CODE 3510–22–S

CONSUMER PRODUCT SAFETY COMMISSION

Sunshine Act Meetings

FEDERAL REGISTER CITATION OF PREVIOUS ANNOUNCEMENT: Vol. 75, No. 137, Monday July 19, 2010, page 41820.

ANNOUNCED TIME AND DATE OF MEETING: 10 a.m.–10:30 a.m., Wednesday July 21, 2010.

CHANGES TO MEETING: Meeting postponed.

For a recorded message containing the latest agenda information, call (301) 504–7948.

FOR FURTHER INFORMATION CONTACT: *Contact Person for Additional Information:* Todd A. Stevenson, Office of the Secretary, 4330 East West Highway, Bethesda, MD 20814 (301) 504–7923.

Dated: July 21, 2010.

.

Todd A. Stevenson,

Secretary.

[FR Doc. 2010–18358 Filed 7–22–10; 4:15 pm]

BILLING CODE 6355–01–P

DEPARTMENT OF DEFENSE

Office of the Secretary; Federal Advisory Committee; Uniform Formulary Beneficiary Advisory Panel; Charter Renewal

AGENCY: Department of Defense (DOD).

ACTION: Renewal of Federal Advisory Committee.

SUMMARY: Under the provisions of 10 U.S.C. 1074g(c), the Federal Advisory Committee Act of 1972, (5 U.S.C. Appendix), the Government in the Sunshine Act of 1976 (5 U.S.C. 552b), and 41 CFR 102–3.50, the Department of Defense gives notice that it is renewing the charter for the Uniform Formulary Beneficiary Advisory Panel (hereafter referred to as the Panel).

FOR FURTHER INFORMATION CONTACT: Jim Freeman, Deputy Committee Management Officer for the Department of Defense, 703–601–6128.

SUPPLEMENTARY INFORMATION: The Panel is a non-discretionary Federal advisory committee established to provide the Secretary of Defense, through the Under Secretary of Defense (Personnel and Readiness), the Assistant Secretary of Defense (Health Affairs) and the Director TRICARE Management Activity, independent advice and recommendations on the development of the uniform formulary. The Secretary of Defense shall consider the comments of the Panel before implementing the uniform formulary or implementing changes to the uniform formulary.

The Under Secretary of Defense (Personnel and Readiness) or designated representative may act upon the Panel's advice and recommendations.

The Panel, pursuant to 10 U.S.C. 1074g(c)(2), shall be comprised of no more than fifteen members. The Panel membership shall include:

a. Non-governmental organizations and associations that represent the views and interests of a large number of eligible covered beneficiaries;

b. Contractors responsible for the TRICARE retail pharmacy program; enrolled in such

c. Contractors responsible for the national mail-order pharmacy program; and

d. TRICARE network providers.

Panel members, who are not full-time or permanent part-time Federal officers

or employees, shall be appointed as experts and consultants under the authority of 5 U.S.C. 3109 and serve as special government employees. All panel members, including those appointed as experts and consultants under section 3109, shall be appointed by the Secretary of Defense and their appointments shall be renewed on an annual basis.

The Panel members shall select the Panels Chairperson from the total membership.

With the exception of travel and per diem for official travel, Panel and subcommittee members shall serve with compensation.

With DOD approval, the Panel is authorized to establish subcommittees, as necessary and consistent with its mission. These subcommittees or working groups shall operate under the provisions of the Federal Advisory Committee Act of 1972, the Government in the Sunshine Act of 1976 (5 U.S.C. 552b), and other appropriate Federal statutes and regulations.

Such subcommittees or workgroups shall not work independently of the chartered Panel, and shall report all their recommendations and advice to the Panel for full deliberation and discussion. Subcommittees or workgroups have no authority to make decisions on behalf of the chartered Panel nor can they report directly to the Department of Defense or any Federal officers or employees who are not Panel members.

Subcommittee members, who are not Panel members, shall be appointed in the same manner as the Panel members. Subcommittee members, who are not full-time or permanent part-time government employees, shall be appointed by the Secretary of Defense according to governing DOD policies and procedures. Such individuals shall be appointed as experts and consultants under the authority of 5 U.S.C. 3109 and shall serve as special government employees, whose appointments must be renewed annually.

The Panel shall meet at the call of the Panel's Designated Federal Officer, in consultation with the Panel's chairperson. The estimated number of Panel meetings is four per year.

The Designated Federal Officer, pursuant to DOD policy, shall be a full-time or permanent part-time DOD employee, and shall be appointed in accordance with established DOD policies and procedures. In addition, the Designated Federal Officer is required to be in attendance at all Panel and subcommittee meetings, however, in the absence of the Designated Federal Officer, the Alternate Designated Federal Officer shall attend the meeting.

Pursuant to 41 CFR 102–3.105(j) and 102–3.140, the public or interested organizations may submit written statements to the Uniform Formulary Beneficiary Advisory Panel membership about the Panel's mission and functions. Written statements may be submitted at any time or in response to the stated agenda of planned meeting of the Uniform Formulary Beneficiary Advisory Panel.

All written statements shall be submitted to the Designated Federal Officer for the Uniform Formulary Beneficiary Advisory Panel, and this individual will ensure that the written statements are provided to the membership for their consideration. Contact information for the Uniform Formulary Beneficiary Advisory Panel Designated Federal Officer can be obtained from the GSA's FACA Database—*https://www.fido.gov/facadatabase/public.asp*.

The Designated Federal Officer, pursuant to 41 CFR 102–3.150, will announce planned meetings of the Uniform Formulary Beneficiary Advisory Panel. The Designated Federal Officer, at that time, may provide additional guidance on the submission of written statements that are in response to the stated agenda for the planned meeting in question.

Dated: July 21, 2010.

Mitchell S. Bryman,

Alternate OSD Federal Register Liaison Officer, Department of Defense.

[FR Doc. 2010–18174 Filed 7–23–10; 8:45 am]

BILLING CODE 5001–06–P

DEPARTMENT OF DEFENSE

Office of the Secretary

Federal Advisory Committee; National Security Education Board; Charter Renewal

AGENCY: Department of Defense (DoD).

ACTION: Renewal of Federal Advisory Committee.

SUMMARY: Under the provisions of 50 U.S.C. 1903, the Federal Advisory Committee Act of 1972, (5 U.S.C. Appendix), the Government in the Sunshine Act of 1976 (5 U.S.C. 552b), and 41 CFR 102–3.50, the Department of Defense gives notice that it is renewing the charter for the National Security Education Board (hereafter referred to as the Board).

FOR FURTHER INFORMATION CONTACT: Jim Freeman, Deputy Committee Management Officer for the Department of Defense, 703–601–6128.

SUPPLEMENTARY INFORMATION: The Board is a non-discretionary Federal advisory committee established to provide the Secretary of Defense, through the Under Secretary of Defense (Personnel and Readiness), independent advice and recommendations on developing the national capacity to educate U.S. citizens to understand foreign cultures, strengthen U.S. economic competitiveness and enhance international cooperation and security.

The Board shall in accordance with 50 U.S.C. 1903(d) perform the following functions:

a. Develop criteria for awarding scholarships, fellowships, and grants under chapter 37 of title 50, United States Code, including an order of priority in such awards that favors individuals expressing an interest in national security issues or pursuing a career in a national security position.

b. Provide for wide dissemination of information regarding the activities assisted under chapter 37 of title 50, United States Code.

c. Establish qualifications for students desiring scholarships or fellowships, and institutions of higher education desiring grants under chapter 37 of title 50, United States Code, including, in the case of students desiring a scholarship or fellowship, a requirement that the student have a demonstrated commitment to the study of the discipline for which the scholarship or fellowship is to be awarded.

d. After taking into account the annual analyses of trends in language, international, area, and counter-proliferation studies under 50 U.S.C. 1906(b)(1), make recommendations to the Secretary of Defense regarding:

i. Which countries are not emphasized in other United States study abroad programs, such as countries in which few United States students are studying and countries which are of importance to the national security interests of the United States, and are, therefore, critical countries for the purposes of 50 U.S.C. 1902(a)(1)(A);

ii. Which areas within the disciplines described in 50 U.S.C. 1902(a)(1)(B), relating to the national security interests of the United States are areas of study in which United States Students are deficient in learning and are therefore, critical areas within those disciplines for the purposes of that section;

iii. Which area within the disciplines described in 50 U.S.C. 1902(a)(1)(C), are areas in which United States students, educators, and Government employees are deficient in learning and in which

insubstantial numbers of United States institutions of higher education provide training and are therefore, critical areas within those disciplines for the purposes of that section;

iv. How students desiring scholarships or fellowships can be encouraged to work for an agency or office of the Federal Government involved in national security affairs or national security policy upon completion of their education; and

v. Which foreign languages are critical to the national security interests of the United States for purposes of 50 U.S.C. 1902(a)(1)(D) (relating to grants for the National Flagship Language Initiative) and 50 U.S.C. 1902(a)(1)(E) (relating to the scholarship program for advanced English language studies by heritage community citizens).

e. Encourage application for fellowships under chapter 37 of title 50, United States Code, from graduate students having an educational background in any academic discipline, particularly in the area of science or technology;

f. Provide the Secretary of Defense biennially with a list of scholarship recipients and fellowship recipients, including an assessment of their foreign area and language skills, who are available to work in a national security position;

g. Not later than 30 days after a scholarship or fellowship recipient completes the study or education for which assistance was provided under the program, provide the Secretary of Defense with a report fully describing the foreign area and language skills obtained by the recipient as a result of the assistance; and

h. Review the administration of the program required under chapter 37 of title 50 United States Code.

The Board shall be comprised of not more than 13 members. Under the provision of title 50 U.S.C. 1903(b), the Board members shall be composed of the following individuals or the representatives of such individuals:

a. The Secretary of Defense, who shall serve as the Chairman of the Board;

b. The Secretary of Education;

c. The Secretary of State;

d. The Secretary of Commerce;

e. The Director of Central Intelligence;

f. The Secretary of Energy; and

g. The Chairperson of the National Endowment for the Humanities.

h. Six individuals appointed by the President, by and with the advice and consent of the Senate, who shall be experts in the fields of international, language, area, and counter-proliferation studies education and who may not be officers or employees of the Federal Government.

Board members appointed by the President shall be appointed for periods specified by the President at the time of their appointment, but not to exceed four years.

Each member of the Board who is a member of the Armed Forces or a civilian officer or employee of the United States shall serve without compensation (other than compensation to which entitled as a member of the Armed Forces or an officer or employee of the United States, as the case may be). Individuals appointed by the President shall receive no compensation for their service on the Board. All members of the Board shall receive per diem and travel for official Board travel.

The Secretary of Defense may invite other distinguished Government officers to serve as non-voting observers of the Board, and appoint consultants, with special expertise to assist the Board on an ad hoc basis.

With DOD approval, the Board is authorized to establish subcommittees, as necessary and consistent with its mission. These subcommittees or working groups shall operate under the provisions of the Federal Advisory Committee Act of 1972, the Government in the Sunshine Act of 1976 (5 U.S.C. 552b), and other appropriate Federal statutes and regulations.

Such subcommittees or workgroups shall not work independently of the chartered Board, and shall report all their recommendations and advice to the Board for full deliberation and discussion. Subcommittees or workgroups have no authority to make decisions on behalf of the chartered Board nor can they report directly to the Department of Defense or any Federal officers or employees who are not Board members.

Subcommittee members, who are not Board members, shall be appointed by the Secretary of Defense according to governing DoD policy and procedures. Such individuals shall be appointed as experts and consultants under the authority of 5 U.S.C. 3109, and serve as special government employees, whose appointments must be renewed by the Secretary of Defense on an annual basis.

The Board shall meet at the call of the Board's Designated Federal Officer, in consultation with the Board's chairperson. The estimated number of Board meetings is four per year.

The Designated Federal Officer, pursuant to DoD policy, shall be a full-time or permanent part-time DoD employee, and shall be appointed in accordance with governing DoD policies and procedures. In addition, the Designated Federal Officer is required to be in attendance at all Board and subcommittee meetings, however, in the absence of the Designated Federal Officer, the Alternate Designated Federal Officer shall attend the meeting.

Pursuant to 41 CFR 102–3.105(j) and 102–3.140, the public or interested organizations may submit written statements to the National Security Education Board membership about the Board's mission and functions. Written statements may be submitted at any time or in response to the stated agenda of planned meeting of the National Security Education Board.

All written statements shall be submitted to the Designated Federal Officer for the National Security Education Board, and this individual will ensure that the written statements are provided to the membership for their consideration. Contact information for the National Security Education Board Designated Federal Officer can be obtained from the GSA's FACA Database—*https://www.fido.gov/facadatabase/public.asp*.

The Designated Federal Officer, pursuant to 41 CFR 102–3.150, will announce planned meetings of the National Security Education Board. The Designated Federal Officer, at that time, may provide additional guidance on the submission of written statements that are in response to the stated agenda for the planned meeting in question.

Dated: July 21, 2010.

Mitchell S. Bryman,

Alternate OSD Federal Register Liaison Officer, Department of Defense.

[FR Doc. 2010–18173 Filed 7–23–10; 8:45 am]

BILLING CODE 5001–06–P

DEPARTMENT OF DEFENSE

Office of the Secretary; Federal Advisory Committee; Defense Intelligence Agency Advisory Board; Closed Meeting

AGENCY: Defense Intelligence Agency, DOD.

ACTION: Meeting notice.

SUMMARY: Under the provisions of the Federal Advisory Committee Act of 1972 (5 U.S.C., Appendix, as amended), the Government in the Sunshine Act of 1976 (5 U.S.C. 552b, as amended), and 41 CFR 102–3.150 the Department of Defense announces that Defense Intelligence Agency Advisory Board will meet on September 1 and 2, 2010. The meeting is closed to the public.

DATES: The meeting will be held on September 1, 2010 (from 1:30 p.m. to

5:15 p.m.) and on September 2, 2010 (from 9 a.m. to 4:30 p.m.).

ADDRESSES: The meeting will be held at Bolling Air Force Base.

FOR FURTHER INFORMATION CONTACT: Mr. Mark Harrison, (703) 647–5102, Alternate Designated Federal Official, DIA Office for Congressional and Public Affairs, Pentagon, 1A874, Washington, DC 20340. *Mark.Harrison@dia.mil.*

Committee's Designated Federal Official: Mr. William Caniano, (703) 614–4774, DIA Office for Congressional and Public Affairs, Pentagon, 1A874 Washington, DC 20340. *William.Caniano@dia.mil.*

SUPPLEMENTARY INFORMATION:

Purpose of the Meeting

For the Advisory Board to review and discuss DIA operations and capabilities in support of current operations.

Agenda

September 1, 2010

1:30 p.m. Convene Advisory Board for Administrative Issues, Mr. William Caniano, Designated Federal Official.
2 p.m. Briefings and Discussion, Mrs. Mary Margaret Graham, Chairman.
3:30 p.m. Break.
3:45 p.m. Review and Discussion.
5:15 p.m. Adjourn.

September 2, 2010

9 a.m. Reconvene for Briefings and Discussion.
12 p.m. Lunch.
1 p.m. Briefings and Discussion.
3 p.m. Break.
3:15 p.m. Deliberations, Mrs. Mary Margaret Graham.
4:30 p.m. Adjourn.

Pursuant to 5 U.S.C. 552b, as amended and 41 CFR 102–3.155, the Defense Intelligence Agency has determined that the meeting shall be closed to the public. The Director, DIA, in consultation with his General Counsel, has determined in writing that the public interest requires that all sessions of the Board's meetings will be closed to the public because they will be concerned with classified information and matters covered by section 5 U.S.C. 552b(c)(1).

Written Statements

Pursuant to 41 CFR 102–3.105(j) and 102–3.140, and section 10(a)(3) of the Federal Advisory Board Committee Act of 1972, the public or interested organizations may submit written statements at any time to the DIA Advisory Board regarding its missions and functions. All written statements shall be submitted to the Designated Federal Official for the DIA Advisory Board. He will ensure that written statements are provided to the membership for their consideration. Written statements may also be submitted in response to the stated agenda of planned committee meetings. Statements submitted in response to this notice must be received by the Designated Federal Official at least five calendar days prior to the meeting which is the subject of this notice. Written statements received after that date may not be provided or considered by the Board until its next meeting. All submissions provided before that date will be presented to the Board members before the meeting that is the subject of this notice. Contact information for the Designated Federal Official is listed under **FOR FURTHER INFORMATION CONTACT.**

Dated: July 21, 2010.

Mitchell S. Bryman,

Alternate OSD Federal Register Liaison Officer, Department of Defense.

[FR Doc. 2010–18175 Filed 7–23–10; 8:45 am]

BILLING CODE 5001–06–P

DEPARTMENT OF DEFENSE

Office of the Secretary

[Docket ID: DOD–2010–OS–0106]

Privacy Act of 1974; System of Records

AGENCY: Office of the Secretary, DoD.

ACTION: Notice to delete a system of records.

SUMMARY: The Office of the Secretary of Defense proposes to delete a system of records notice from its existing inventory of record systems subject to the Privacy Act of 1974, (5 U.S.C. 552a), as amended.

DATES: This proposed action will be effective without further notice on August 25, 2010, unless comments are received which result in a contrary determination.

ADDRESSES: You may submit comments, identified by docket number and title, by any of the following methods:

- *Federal Rulemaking Portal: http://www.regulations.gov.* Follow the instructions for submitting comments.
- *Mail:* Federal Docket Management System Office, Room 3C843 Pentagon, 1160 Defense Pentagon, Washington, DC 20301–1160.

Instructions: All submissions received must include the agency name and docket number for this **Federal Register** document. The general policy for comments and other submissions from members of the public is to make these submissions available for public viewing on the Internet at *http://www.regulations.gov* as they are received without change, including any personal identifiers or contact information.

FOR FURTHER INFORMATION CONTACT: Mrs. Cindy Allard at (703) 588–6830.

SUPPLEMENTARY INFORMATION: The Office of the Secretary of Defense systems of records notices subject to the Privacy Act of 1974, (5 U.S.C. 552a), as amended, have been published in the **Federal Register** and are available from the Privacy Act Officer, Office of Freedom of Information, Washington Headquarters Services, 1155 Defense Pentagon, Washington, DC 20301–1155.

The Office of the Secretary of Defense proposes to delete one system of records notice from its inventory of record systems subject to the Privacy Act of 1974 (5 U.S.C. 552a), as amended. The proposed deletion is not within the purview of subsection (r) of the Privacy Act of 1974, (5 U.S.C. 552a), as amended, which requires the submission of a new or altered system report.

Dated: July 21, 2010.

Mitchell S. Bryman,

Alternate OSD Federal Register Liaison Officer, Department of Defense.

Deletion: DWHS P01

SYSTEM NAME:

Senior Executive Service (SES) and Equivalent Level Files (February 22, 1993, 58 FR 10227).

REASON:

After review of DWHS P01, it has been determined that the system can be deleted. The system is covered by OPM Gov-1, General Personnel Records (June 19, 2006; 71 FR 35356) and OPM Gov-5, Recruiting, Examining, and Placement Records (June 19, 2006; 71 FR 35351).

[FR Doc. 2010–18246 Filed 7–23–10; 8:45 am]

BILLING CODE 5001–06–P

DEPARTMENT OF DEFENSE

Office of the Secretary

[Docket ID: DOD–2010–OS–0105]

Privacy Act of 1974; System of Records

AGENCY: National Security Agency/Central Security Service, DoD.

ACTION: Notice to delete a system of records.

SUMMARY: The National Security Agency/Central Security Service proposes to delete a system of records notice from its existing inventory of record systems subject to the Privacy Act of 1974, (5 U.S.C. 552a), as amended.

DATES: This proposed action will be effective without further notice on August 25, 2010, unless comments are received which result in a contrary determination.

ADDRESSES: You may submit comments, identified by dock number and title, by any of the following methods:

• *Federal Rulemaking Portal: http://www.regulations.gov*. Follow the instructions for submitting comments.

• *Mail:* Federal Docket Management System Office, Room 3C843 Pentagon, 1160 Defense Pentagon, Washington, DC 20301–1160.

Instructions: All submissions received must include the agency name and docket number for this **Federal Register** document. The general policy for comments and other submissions from members of the public is to make these submissions available for public viewing on the Internet at *http://www.regulations.gov* as they are received without change, including any personal identifiers or contact information.

FOR FURTHER INFORMATION CONTACT: Ms. Anne Hill at (301) 688–6527.

SUPPLEMENTARY INFORMATION: The National Security Agency's record system notices for records systems subject to the Privacy Act of 1974 (5 U.S.C. 552a), as amended, have been published in the **Federal Register** and are available from the National Security Agency/Central Security Service, Freedom of Information Act and Privacy Act Office, 9800 Savage Road, Suite 6248, Ft. George G. Meade, MD 20755–6248.

The National Security Agency/Central Security Service proposes to delete a system of records notice in its inventory of record systems subject to the Privacy Act of 1974 (5 U.S.C. 552a), as amended. The proposed deletion is not within the purview of subsection (r) of the Privacy Act of 1974, (5 U.S.C. 552a), as amended, which requires the submission of a new or altered system report.

Dated: July 21, 2010.

Mitchell S. Bryman,

Alternate OSD Federal Register Liaison Officer, Department of Defense.

GNSA 01

SYSTEM NAME:

NSA/CSS Access, Authority and Release of Information File (February 22, 1993; 58 FR 10531).

REASON:

The records contained in this system of records are covered by GNSA 11, NSA/CSS Key Accountability Records, GNSA 10, NSA/CSS Personnel Security File and DPR 39 DoD, DoD Personnel Accountability & Assessment System. Therefore, the system will be deleted.

[FR Doc. 2010–18247 Filed 7–23–10; 8:45 am]

BILLING CODE 5001–06–P

DEFENSE NUCLEAR FACILITIES SAFETY BOARD

Sunshine Act Notice

AGENCY: Defense Nuclear Facilities Safety Board.

ACTION: Notice of public meeting.

SUMMARY: Pursuant to the provisions of the Government in the Sunshine Act, 5 U.S.C. 552b, and as authorized by 42 U.S.C. 2286b, notice is hereby given of a three-part public hearing and meeting in Richland, Washington. Interested persons or groups may present comments, technical information, or data to the Board on the announced topics.

TIME AND DATE OF MEETING: Session I: 9 a.m.–1 p.m., October 7, 2010; Session II: 5 p.m.–9 p.m., October 7, 2010; Session III: 8 a.m.–12 p.m., October 8, 2010.

PLACE: Room 133, Richland Federal Building, 825 Jadwin Avenue, Richland, Washington 99352–3589.

STATUS: Open.

MATTERS TO BE CONSIDERED: This hearing concerns safety-related aspects of the design and construction of the Department of Energy's Waste Treatment and Immobilization Plant at the Hanford Site. Prior to the hearing, the Board will send to the Department of Energy a series of questions to which written answers will be expected. The answers supplied by the Department will be posted on the Board's Internet Web site (*http://www.dnfsb.gov*) prior to the hearing. These written responses will be treated as part of the hearing record and will be used by the Board to assist in framing the issues to be explored in oral testimony. Technical issues under review include (1) changes in safety-related design criteria resulting from modification of the material-at-risk, (2) changes in design strategy to address hydrogen in pipes and ancillary vessels, (3) criticality safety concerns and other safety-related risks for the pulse jet mixing system, (4) reclassification of safety-related systems, structures, and components, and (5) safety-related design aspects of new facilities or modifications of existing facilities needed to deliver high-level waste feed.

The Board will be prepared to accept any other information related to public health or safety, including that of the workers with respect to the Waste Treatment and Immobilization Plant.

CONTACT PERSON FOR MORE INFORMATION: Brian Grosner, General Manager, Defense Nuclear Facilities Safety Board, 625 Indiana Avenue, NW., Suite 700, Washington, DC 20004–2901, (800) 788–4016. This is a toll-free number.

SUPPLEMENTARY INFORMATION: Public participation in the hearing is invited. The Board is setting aside thirty minutes at the end of each session of the hearing for presentations and comments from the public. Requests to speak may be submitted in writing or by telephone. The Board asks that commentators describe the nature and scope of their oral presentations. Those who contact the Board prior to close of business on Friday, October 1, 2010, will be scheduled to speak at the session of the hearing most relevant to their presentations. On the morning of October 7, the Board will post a schedule of speakers at the entrance to the hearing room. Anyone who wishes to comment or provide technical information or data may do so in writing, either in lieu of, or in addition to, making an oral presentation. The Board members may question presenters to the extent deemed appropriate. Documents will be accepted at the hearing or may be sent to the Board's Washington, DC, office.

The Board will hold the record open until November 7, 2010, for the receipt of additional materials. A transcript of the meeting will be made available by the Board for inspection by the public at the Board's Washington office and at DOE's public reading room at the DOE Federal Building, 1000 Independence Avenue, SW., Washington, DC 20585. The Board specifically reserves its right to further schedule and otherwise regulate the course of the meeting and hearing, to recess, reconvene, postpone, or adjourn the meeting and hearing, conduct further reviews, and otherwise exercise its power under the Atomic Energy Act of 1954, as amended.

Dated: July 21, 2010.

Jessie H. Roberson,

Vice Chairman.

[FR Doc. 2010–18298 Filed 7–22–10; 11:15 am]

BILLING CODE 3670–01–P

DEPARTMENT OF DEFENSE

Corps of Engineers

Department of the Army: Intent to Prepare a Draft Environmental Impact Statement for the General Re-Evaluation Report for the Mamaroneck and Sheldrake Rivers Flood Damage Risk Reduction Project Village of Mamaroneck, Westchester County, NY

AGENCY: Department of the Army, U.S. Army Corps of Engineers, DoD.

ACTION: Notice of intent.

SUMMARY: The U.S. Army Corps of Engineers, New York District (District), is preparing a Draft Environmental Impact Statement (DEIS) to ascertain compliance with and to lead to the production of a National Environmental Policy Act (NEPA) document in accordance with the President's Council of Environmental Quality (CEQ) Rules and Regulations, as defined and amended in 40 Code of Federal Regulations (CFR), Parts 1500–1508, Corps principles and guidelines as defined in Engineering Regulation (ER) 1105–2–100, and other applicable Federal and State environmental laws for the proposed Mamaroneck and Sheldrake Rivers Flood Damage Risk Reduction Project. The study area consists of the Mamaroneck and Sheldrake Rivers Basin, which lies entirely within Westchester County, New York and contains portions of the Village and Town of Mamaroneck, the Cities of New Rochelle and White Plains, the Towns of Harrison and North Castle, and the Village of Scarsdale. The EIS process will identify the potential social, economic, cultural, and environmental affects through the implementation of the alternative plans. The District will work as part of a team to include the New York State Department of Environmental Conservation and possibly the County of Westchester, and the Village and/or Town of Mamaroneck.

ADDRESSES: U.S. Army Corps of Engineers, New York District, Planning Division, Environmental Analysis Branch, 26 Federal Plaza, Room 2151, New York, NY 10278–0090.

FOR FURTHER INFORMATION CONTACT: Matthew Voisine, Project Biologist, at *matthew.voisine@usace.army.mil* or 917.790.8718.

SUPPLEMENTARY INFORMATION:

1. It is anticipated that a DEIS will be made available for public review in May 2013.

2. Public information meeting(s) will be held during the DEIS process and comments and issues will be incorporated into the document.

3. When the date(s) and time(s) for the public meeting(s) are identified, they will be posted on the Districts website at *http://www.nan.usace.army.mil*

4. Individuals interested in obtaining a copy of the DEIS for review should contact Matthew Voisine (*see* **ADDRESSES**).

5. All federal agencies interested in participating as a Cooperating Agency are requested to submit a letter of intent to COL John R. Boulé II, P.E., District Engineer, U.S. Army Corps of Engineers, 26 Federal Plaza, Room 2109, New York, NY 10278–0090 .

Dated: July 15, 2010.

Nancy Brighton.

Chief, Watershed Section, U.S. Army Corps of Engineers, New York District.

[FR Doc. 2010–18197 Filed 7–23–10; 8:45 am]

BILLING CODE 3720–58–P

DEPARTMENT OF DEFENSE

Department of the Army

Board of Visitors, Defense Language Institute Foreign Language Center

AGENCY: Department of the Army, DoD.

ACTION: Notice of open meeting.

SUMMARY: Under the provisions of the Federal Advisory Committee Act of 1972 (5 U.S.C., Appendix, as amended), the Government in the Sunshine Act of 1976 (5 U.S.C. 552b, as amended) and 41 CFR 102–3.150, the Department of Defense announces that the following Federal advisory committee meeting will take place:

Name of Committee: Board of Visitors, Defense Language Institute Foreign Language Center.

Date: August 10 and 11, 2010.

Time of Meeting: Approximately 8 a.m. through 4:30 p.m.. Please allow extra time for gate security for both days.

Location: Defense Language Institute Foreign Language Center and Presidio of Monterey (DLIFLC & POM), Building 614, Conference Room, Monterey, CA 93944.

Purpose of the Meeting: The purpose of the meeting is to provide a general orientation to the DLIFLC mission and functional areas. In addition, the meeting will involve administrative matters.

Agenda: Summary—August 10—The Board will be briefed on DLIFLC mission and functional areas. August 11—Board administrative details to include parent committee introduction, board purpose, operating procedures review, and oath. DLIFLC functional areas will be discussed.

Public's Accessibility to the Meeting: Pursuant to 5 U.S.C. 552b and 41 CFR 102–3.140 through 102–3.165, and the availability of space, this meeting is open to the public. Seating is on a first-come basis. No member of the public attending open meetings will be allowed to present questions from the floor or speak to any issue under consideration by the Board. Although open to the public, gate access is required no later than five work days prior to the meeting. Contact the Committee's Designated Federal Officer, below, for gate access procedures.

Committee's Designated Federal Officer or Point of Contact: Mr. Detlev Kesten, ATFL–APO, Monterey, CA 93944, *Detlev.kesten@us.army.mil,* (831) 242–6670.

SUPPLEMENTARY INFORMATION: Pursuant to 41 CFR 102–3.105(j) and 102–3.140 and section 10(a)(3) of the Federal Advisory Committee Act of 1972, the public may submit written statements to the Board of Visitors of the Defense Language Institute Foreign Language Center in response to the agenda. All written statements shall be submitted to the Designated Federal Officer of the Board of Visitors of the Defense Language Institute Foreign Language Center, and this individual will ensure that the written statements are provided to the membership for their consideration. Written statements should be sent to: Attention: DFO at ATFL–APO, Monterey, CA, 93944 or faxed to (831) 242–6495. Statements must be received by the Designated Federal officer at least five work days prior to the meeting. Written statements received after this date may not be provided to or considered by the Board of Visitors of the Defense Language Institute Foreign Language Center until its next meeting.

FOR FURTHER INFORMATION CONTACT: Mr. Detlev Kesten, ATFL–APO, Monterey, CA 93944, *Detlev.kesten@us.army.mil,* (831) 242–6670.

Brenda S. Bowen,

Army Federal Register Liaison Officer.

[FR Doc. 2010–18212 Filed 7–23–10; 8:45 am]

BILLING CODE 3710–08–P

DEPARTMENT OF DEFENSE

Office of the Secretary

[Docket ID: DOD–2010–OS–0104]

Privacy Act of 1974; System of Records

AGENCY: National Geospatial-Intelligence Agency (NGA), DoD.

ACTION: Notice to add a system of records.

SUMMARY: The National Geospatial-Intelligence Agency (NGA) proposes to add a system of records to its inventory of record systems subject to the Privacy Act of 1974 (5 U.S.C. 552a), as amended.

DATES: The changes will be effective on August 25, 2010, unless comments are received that would result in a contrary determination.

ADDRESSES: You may submit comments, identified by docket number and title, by any of the following methods:

- *Federal Rulemaking Portal: http://www.regulations.gov.* Follow the instructions for submitting comments.
- *Mail:* Federal Docket Management System Office, Room 3C843 Pentagon, 1160 Defense Pentagon, Washington, DC 20301–1160.
- *Instructions:* All submissions received must include the agency name and docket number for this **Federal Register** document. The general policy for comments and other submissions from members of the public is to make these submissions available for public viewing on the Internet at *http://www.regulations.gov* as they are received without change, including any personal identifiers or contact information.

FOR FURTHER INFORMATION CONTACT: Mr. John Eller at 703–453–3808.

SUPPLEMENTARY INFORMATION: The National Geospatial-Intelligence Agency notices for systems of records subject to the Privacy Act of 1974 (5 U.S.C. 552a), as amended, have been published in the **Federal Register** and are available from the NGA Information Technology (IT) Policy and Privacy Lead, Privacy Program Office, National Geospatial-Intelligence Agency (NGA), 6011 MacArthur Blvd, Bethesda, MD 20816–5003.

The proposed systems report, as required by 5 U.S.C. 552a(r) of the Privacy Act of 1974, as amended, was submitted on July 13, 2010, to the House Committee on Government Reform, the Senate Committee on Homeland Security and Governmental Affairs, and the Office of Management and Budget (OMB) pursuant to paragraph 4c of Appendix I to OMB Circular No. A–130, "Federal Agency Responsibilities for Maintaining Records About Individuals," dated February 8, 1996 (February 20, 1996; 61 FR 6427).

Dated: July 21, 2010.

Mitchell S. Bryman,

Alternate OSD Federal Register Liaison Officer, Department of Defense.

B1211–04

SYSTEM NAME:

TravelNet.

SYSTEM LOCATION:

National Geospatial-Intelligence Agency (NGA), 12310 Sunrise Valley Drive, Reston, VA 20191–3449.

CATEGORIES OF INDIVIDUALS COVERED BY THE SYSTEM:

NGA employees and contactors who maintain travel activities or interests outside the Continental United States (OCONUS) or maintain a relationship with a foreign contact.

CATEGORIES OF RECORDS IN THE SYSTEM:

Name, address, date of birth, Social Security Number (SSN), business phone number and e-mail address, personal phone number and e-mail address, medical clearance status, military status, employment status, passport information, foreign activities and interests, and family personal contact information.

AUTHORITY FOR MAINTENANCE OF THE SYSTEM:

National Security Act of 1947, Section 102, Director of Intelligence; Executive Order 12333, United States Intelligence Activities; DoD 4500.54G, DoD Foreign Clearance Guide; DoD 5105.21–M–1, DoD Sensitive Compartmental Information Administrative Security Manual; DoD Instruction 5240.6, Counterintelligence Awareness and Briefing Program; DoD 2000.16, DoD Antiterrorism Standards; Director of Central Intelligence Directive (DCID) 1/20, Security Policy Concerning Travel and Assignment of Personnel with Access to Sensitive Compartmented Information; DCID 1/19P, Security Policy for Sensitive Compartmented Information and Security Policy Manual; and E.O. 9397 (SSN), as amended.

PURPOSE(S):

TravelNet manages employee and contractor travel activities, related to personal and business interests outside the Continental United States (OCONUS), and relationships with foreign contacts.

ROUTINE USES OF RECORDS MAINTAINED IN THE SYSTEM, INCLUDING CATEGORIES OF USERS AND THE PURPOSES OF SUCH USES:

In addition to those disclosures generally permitted under 5 U.S.C. 552a(b) of the Privacy Act of 1974, these records contained therein may specifically be disclosed outside the DoD as a routine use pursuant to 5 U.S.C. 552a(b)(3) as follows:

The DoD 'Blanket Routine Uses' set forth at the beginning of the Army's compilation of systems of records notices also apply to this system.

POLICIES AND PRACTICES FOR STORING, RETRIEVING, ACCESSING, RETAINING, AND DISPOSING OF RECORDS IN THE SYSTEM:

STORAGE:

Records are maintained on electronic storage media and paper.

RETRIEVABILITY:

By Social Security Number (SSN) and name.

SAFEGUARDS:

Records are maintained in a controlled facility. Physical access is restricted by the use of locks, guards, and is accessible only to authorized personnel. Access to records is limited to individuals responsible for servicing the record in performance of their official duties and who are properly screened and cleared for need-to-know. Access to computerized data is restricted by password protection, firewalls, and encryption.

RETENTION AND DISPOSAL:

TravelNet records are destroyed or deleted six years after the user account is terminated or if the password is altered when no longer needed for investigative, or for security purposes, whichever is later. Paper records are destroyed by shredding.

SYSTEM MANAGER(S) AND ADDRESS:

National Geospatial-Intelligence Agency (NGA), ATTN: Branch Chief, Mission Support, MSRS P–12, 12310 Sunrise Valley Drive, Reston, VA 20191–3449.

NOTIFICATION PROCEDURE:

Individuals seeking to determine whether information about themselves is contained in this system should address written inquiries to the National Geospatial-Intelligence Agency (NGA), Office of the General Counsel, Mail Stop D–10, 4600 Sangamore Road, Bethesda, MD 20816–5003.

Written requests should contain the full name of the individual, current address, and telephone number. While the requestor's Social Security Number (SSN) is not required, providing it will

expedite the authentication of the requestor's identity and clearance levels.

RECORD ACCESS PROCEDURES:

Individuals seeking access to information about themselves contained in this system should address written inquiries to the National Geospatial-Intelligence Agency (NGA), Office of the General Counsel, Mail Stop D–10, 4600 Sangamore Road, Bethesda, MD 20816–5003.

Written requests should contain the full name of the individual, current address, and telephone number. While the requestor's Social Security Number (SSN) is not required, providing it will expedite the authentication of the requestor's identity and clearance levels.

CONTESTING RECORDS PROCEDURES:

NGA's rules for accessing records, and for contesting contents and appealing initial agency determinations, are published in NGA Instruction 5500.7R10; 32 CFR part 320.6; or may be obtained from the system manager.

RECORD SOURCE CATEGORIES:

From the individual.

EXEMPTIONS CLAIMED FOR THE SYSTEM:

None.

[FR Doc. 2010–18245 Filed 7–23–10; 8:45 am]

BILLING CODE 5001–06–P

DEPARTMENT OF DEFENSE

Department of the Army

[Docket ID: USA–2010–0018]

Privacy Act of 1974; System of Records

AGENCY: Department of the Army, DoD.

ACTION: Notice to add a system of records.

SUMMARY: The Department of the Army proposes to add a system of records to its inventory of record systems subject to the Privacy Act of 1974 (5 U.S.C. 552a), as amended.

DATES: This proposed action will be effective without further notice on August 25, 2010 unless comments are received which result in a contrary determination.

ADDRESSES: You may submit comments, identified by docket number and title, by any of the following methods:

• *Federal Rulemaking Portal: http://www.regulations.gov.* Follow the instructions for submitting comments.

• *Mail:* Federal Docket Management System Office, Room 3C843 Pentagon, 1160 Defense Pentagon, Washington, DC 20301–1160.

Instructions: All submissions received must include the agency name and docket number for this **Federal Register** document. The general policy for comments and other submissions from members of the public is to make these submissions available for public viewing on the Internet at *http://www.regulations.gov* as they are received without change, including any personal identifiers or contact information.

FOR FURTHER INFORMATION CONTACT: Mr. Leroy Jones at (703) 428–6185.

SUPPLEMENTARY INFORMATION: The Department of the Army notices for systems of records subject to the Privacy Act of 1974 (5 U.S.C. 552a), as amended, have been published in the **Federal Register** and are available from the Department of the Army, Privacy Office, U.S. Army Records Management and Declassification Agency, 7701 Telegraph Road, Casey Building, Suite 144, Alexandria, VA 22325–3905.

The proposed system report, as required by 5 U.S.C. 552a(r) of the Privacy Act of 1974, as amended, was submitted on July 2, 2010, to the House Committee on Oversight and Government Reform, the Senate Committee on Governmental Affairs, and the Office of Management and Budget (OMB) pursuant to paragraph 4c of Appendix I to OMB Circular No. A–130, "Federal Agency Responsibilities for Maintaining Records About Individuals," dated February 8, 1996 (February 20, 1996; 61 FR 6427).

Dated: July 21, 2010.

Mitchell S. Bryman,

Alternate OSD Federal Register Liaison Officer, Department of Defense.

A0385–10 IMCOM

SYSTEM NAME:

Army IMCOM Registration System (AIRS).

SYSTEM LOCATION:

Installation Management Command (IMCOM), Safety Office, 2511 Jefferson Davis Highway, Arlington, VA 22202–3926.

CATEGORIES OF INDIVIDUALS COVERED BY THE SYSTEM:

Department of Defense (Army, Navy, Air Force, Marines, Army Reserve, Army National Guard) military personnel and family members; military retirees and family members; and Department of the Army civilians.

CATEGORIES OF RECORDS IN THE SYSTEM:

Name, last four digits of the Social Security Number (SSN), date of birth, grade/rank, military status, Unit Identification Code (UIC), e-mail address, primary phone, mailing address, personnel status, and duty station location.

AUTHORITY FOR THE MAINTENANCE OF THE SYSTEM:

5 U.S.C. 301, Departmental Regulations; 10 U.S.C. 3013, Secretary of the Army; DoD Instruction 6055.04, DoD Traffic Safety Program; Army Regulation 385–10, The Army Safety Program; DA Pam 385–10, Army Safety Program; Executive Order 12196, Occupational Safety and Health Programs for Federal Employees; and E.O. 9397, as amended.

PURPOSE(S):

The system is designed to assist Army IMCOM in collecting, storing, maintaining data and reporting on Army Traffic Safety Training Program (ATSTP) course offerings and registrations.

ROUTINE USES OF RECORDS MAINTAINED IN THE SYSTEM, INCLUDING CATEGORIES OF USERS AND THE PURPOSES OF SUCH USES:

In addition to those disclosures generally permitted under 5 U.S.C. 522a(b) of the Privacy Act of 1974, these records contained are not generally disclosed outside the DoD.

POLICIES AND PRACTICES FOR STORING, RETRIEVING, ACCESSING, RETAINING, AND DISPOSING OF RECORDS IN THE SYSTEM:

STORAGE:

Electronic storage media.

RETRIEVABILITY:

Last name, first name and/or last four digits of Social Security Number (SSN).

SAFEGUARDS:

The system records are maintained in fail-safe system software with password-protected access. Records are accessible only to authorized persons with a need to know. Proper screening, clearing and training is accomplished prior to issuance of user ID and password.

RETENTION AND DISPOSAL:

Records are maintained for 5 years, then destroyed by erasing.

SYSTEM MANAGER(S) AND ADDRESS:

Installation Management Command, Safety Office, 2511 Jefferson Davis Highway, Arlington, VA 22202–3926.

NOTIFICATION PROCEDURE:

Individuals seeking to determine whether information about themselves is contained in this system of records should address written inquiries to the Installation Management Command, Garrison Safety Office at the installation or activity where assigned.

All written inquiries should provide the full name, last four digits of Social Security Number (SSN), date of birth, military status and current mailing address and any details which may assist in locating record, and their signature.

In addition, the requester must provide a notarized statement or an unsworn declaration made in accordance with 28 U.S.C. 1746, in the following format:

If executed outside the United States: 'I declare (or certify, verify, or state) under penalty of perjury under the laws of the United States of America that the foregoing is true and correct. Executed on (date). (Signature)'.

If executed within the United States, its territories, possessions, or commonwealths: 'I declare (or certify, verify, or state) under penalty of perjury that the foregoing is true and correct. Executed on (date). (Signature)'.

RECORD ACCESS PROCEDURES:

Individuals seeking to determine whether information about themselves is contained in this system should address written inquiries to the Installation Management Command, Installation Safety Office at the installation or activity where assigned.

All written inquiries should provide the full name, last four digits of Social Security Number (SSN), date of birth, military status and current mailing address and any details which may assist in locating record, and their signature.

In addition, the requester must provide a notarized statement or an unsworn declaration made in accordance with 28 U.S.C. 1746, in the following format:

If executed outside the United States: 'I declare (or certify, verify, or state) under penalty of perjury under the laws of the United States of America that the foregoing is true and correct. Executed on (date). (Signature)'.

If executed within the United States, its territories, possessions, or commonwealths: 'I declare (or certify, verify, or state) under penalty of perjury that the foregoing is true and correct. Executed on (date). (Signature)'.

CONTESTING RECORD PROCEDURES:

The Army's rules for accessing records, and for contesting contents and appealing initial agency determinations are contained in AR 340–21; 32 CFR part 505 or may be obtained from the system manager.

RECORD SOURCE CATEGORIES:

Records are manually entered into the system by individuals through the use of web forms.

EXEMPTIONS CLAIMED FOR THE SYSTEM:

None.

[FR Doc. 2010–18248 Filed 7–23–10; 8:45 am]

BILLING CODE 5001–06–P

DEPARTMENT OF DEFENSE

Department of the Navy

[Docket ID USN–2010–0027]

Privacy Act of 1974; System of Records

AGENCY: U.S. Marine Corps, Department of the Navy, DoD.

ACTION: Notice to add a system of records.

SUMMARY: The U.S. Marine Corps is proposing to add a system of records to its inventory of record systems subject to the Privacy Act of 1974, (5 U.S.C. 552a), as amended.

DATES: This proposed action will be effective without further notice on August 25, 2010, unless comments are received which result in a contrary determination.

ADDRESSES: You may submit comments, identified by docket number and title, by any of the following methods:

- *Federal Rulemaking Portal: http://www.regulations.gov.* Follow the instructions for submitting comments.
- *Mail:* Federal Docket Management System Office, Room 3C843 Pentagon, 1160 Defense Pentagon, Washington, DC 20301–1160.

Instructions: All submissions received must include the agency name and docket number for this **Federal Register** document. The general policy for comments and other submissions from members of the public is to make these submissions available for public viewing on the Internet at *http://www.regulations.gov* as they are received without change, including any personal identifiers or contact information.

FOR FURTHER INFORMATION CONTACT: Ms. Tracy Ross at (703) 614–4008.

SUPPLEMENTARY INFORMATION: The U.S. Marine Corps system of records notices subject to the Privacy Act of 1974, (5 U.S.C. 552a), as amended, have been published in the **Federal Register** and are available from the Headquarters, U.S. Marine Corps, FOIA/PA Section (ARSF), 2 Navy Annex, Room 3134, Washington, DC 20380–1775.

The proposed system report, as required by 5 U.S.C. 552a(r), of the Privacy Act of 1974, as amended, was submitted on July 13, 2010, to the House Committee on Oversight and Government Reform, the Senate Committee on Homeland Security and Governmental Affairs, and the Office of Management and Budget (OMB) pursuant to paragraph 4c of Appendix I to OMB Circular No. A–130, "Federal Agency Responsibilities for Maintaining Records About Individuals," dated February 8, 1996 (February 20, 1996; 61 FR 6427).

Dated: July 21, 2010.

Mitchell S. Bryman,

Alternate OSD Federal Register Liaison Officer, Department of Defense.

M01070–8

SYSTEM NAME:

Marine Corps Wounded, Ill, and Injured Tracking System.

SYSTEM LOCATION:

Manpower and Reserve Affairs (M&RA), 3280 Russell Road, Quantico, VA 22134–5103–5143.

CATEGORIES OF INDIVIDUALS COVERED BY THE SYSTEM:

Active Duty, Reserve, Retired, and former Marines and Sailors, attached to or in support of Marine units, who are undergoing treatment or recovering from injury or illness, and the family members involved with recovering service members and veterans throughout the phases of recovery.

CATEGORIES OF RECORDS IN THE SYSTEM:

The system contains personnel data which includes, name, rank/grade, Military Occupational Specialty (MOS), Social Security Number (SSN), date of birth, current address, contact information, beneficiary and next of kin information, blood type, service separation information, limited financial information for medical claim submission, spouse information, primary caregiver information, limited injury and illness-specific medical information, services provided, charitable gifts received, and other personnel management data.

AUTHORITY FOR MAINTENANCE OF THE SYSTEM:

10 U.S.C. 5013, Secretary of the Navy; 10 U.S.C. 5041, Headquarters, Marine Corps: function, composition; and E.O. 9397, (SSN), as amended.

PURPOSE(S):

The Marine Corps Wounded, Ill, and Injured Tracking System (MCWIITS) provides the ability for identifying, tracking, and facilitating support to current and former ill (veterans) and injured Marines, Sailors attached to or in support of Marine units, and their families throughout all of the phases of recovery.

ROUTINE USES OF RECORDS MAINTAINED IN THE SYSTEM, INCLUDING CATEGORIES OF USERS AND THE PURPOSES OF SUCH USES:

In addition to those disclosures generally permitted under 5 U.S.C. 552a(b) of the Privacy Act of 1974, these records contained therein may specifically be disclosed outside the DoD as a routine use pursuant to 5 U.S.C. 552a(b) as follows.

The DoD 'Blanket Routine Uses' set forth at the beginning of the Marine Corps' compilation of systems of records notices apply to this system.

POLICIES AND PRACTICES FOR STORING, RETRIEVING, ACCESSING, RETAINING, AND DISPOSING OF RECORDS IN THE SYSTEM:

STORAGE:

Records are stored on electronic storage media.

RETRIEVABILITY:

Name, Social Security Number (SSN), or date of birth.

SAFEGUARDS:

The system is located in a restricted area. All users are required to provide a valid common access card (CAC) protected by PKI authentication and access is specifically granted by a MCWIITS Administrator. Records in the MCWIITS are maintained in a secure, password protected electronic system that utilizes security hardware, software, and role-based access controls.

RETENTION AND DISPOSAL:

Electronic records are maintained on all military personnel in MCWIITS while they are in service for a period of 11 months after separation. Disposition pending (until the National Archives and Records Administration approves retention and disposal schedule, records will be treated as permanent).

SYSTEM MANAGER(S) AND ADDRESS:

Branch Head, Manpower Information Systems Technology Branch, Manpower Information Systems Division, Manpower and Reserve Affairs Headquarters, U.S. Marine Corps, 3280 Russell Road, Quantico, VA 22134–5103.

NOTIFICATION PROCEDURE:

Individuals seeking to determine whether information about themselves is contained in this system should address written inquiries to the Marine Corps Wounded, Injured and Ill Tracking System should submit written inquiries to Branch Head, Manpower Information Systems Technology Branch, Manpower Information Systems Division, Manpower and Reserve Affairs, Headquarters, U.S. Marine Corps, 3280 Russell Road, Quantico, VA 22134–5103.

Requests should contain individual's name, Social Security Number (SSN), complete mailing address, and must be signed and notarized.

RECORD ACCESS PROCEDURES:

Individuals seeking access to information about themselves contained in the Marine Corps Wounded, Injured and Ill Tracking System should submit written inquiries to Branch Head, Manpower Information Systems Technology Branch, Manpower Information Systems Division, Manpower and Reserve Affairs, Headquarters, U.S. Marine Corps, 3280 Russell Road, Quantico, VA 22134–5103.

Requests should contain individual's name, Social Security Number (SSN), complete mailing address, and must be signed and notarized.

CONTESTING RECORD PROCEDURES:

The USMC rules for contesting contents and appealing initial agency determinations are published in Secretary of the Navy Instruction 5211.5; 32 CFR part 701; or may be obtained from the system manager.

RECORD SOURCE CATEGORIES:

Individuals, Operational Data Store Enterprise (ODSE); and Defense Casualty Information Processing System (DCIPS).

EXEMPTIONS CLAIMED FOR THE SYSTEM:

None.

[FR Doc. 2010–18250 Filed 7–23–10; 8:45 am]

BILLING CODE 5001–06–P

DEPARTMENT OF DEFENSE

Department of the Navy

[Docket ID: USN–2010–0028]

Privacy Act of 1974; System of Records

AGENCY: Department of the Navy, DoD.

ACTION: Notice to amend a system of records.

SUMMARY: The Department of the Navy proposes to amend a system of records in its inventory of record systems subject to the Privacy Act of 1974 (5 U.S.C. 552a), as amended.

DATES: The changes will be effective on August 25, 2010, unless comments are received that would result in a contrary determination.

ADDRESSES: You may submit comments, identified by docket number and title, by any of the following methods:

- *Federal Rulemaking Portal: http://www.regulations.gov*. Follow the instructions for submitting comments.
- *Mail:* Federal Docket Management System Office, Room 3C843 Pentagon, 1160 Defense Pentagon, Washington, DC 20301–1160.

Instructions: All submissions received must include the agency name and docket number for this **Federal Register** document. The general policy for comments and other submissions from members of the public is to make these submissions available for public viewing on the Internet at *http://www.regulations.gov* as they are received without change, including any personal identifiers or contact information.

FOR FURTHER INFORMATION CONTACT: Mrs. Miriam Brown-Lam (202) 685–6545.

SUPPLEMENTARY INFORMATION: The Department of the Navy systems of records notices subject to the Privacy Act of 1974, (5 U.S.C. 552a), as amended, have been published in the **Federal Register** and are available from Mrs. Miriam Brown-Lam, HEAD, FOIA/Privacy Act Policy Branch, the Department of the Navy, 2000 Navy Pentagon, Washington, DC 20350–2000.

The specific changes to the records system being amended are set forth below followed by the notice, as amended, published in its entirety. The proposed amendment is not within the purview of subsection (r) of the Privacy Act of 1974 (5 U.S.C. 552a), as amended, which requires the submission of new or altered systems reports.

Dated: July 21, 2010.

Mitchell S. Bryman,

Alternate OSD Federal Register Liaison Officer, Department of Defense.

N01301–2

SYSTEM NAME:

On-Line Distribution Information System (ODIS) (July 23, 2007; 72 FR 40125).

CHANGES:

* * * * *

SYSTEM LOCATION:

Delete entry and replace with "Defense Information Systems Agency (DISA)—Defense Enterprise Computing Center Mechanicsburg, 5450 Carlisle Pike, Mechanicsburg, PA 17050–0975."

* * * * *

AUTHORITY FOR MAINTENANCE OF THE SYSTEM:

Delete entry and replace with "5 U.S.C. 301, Department Regulations; 10 U.S.C. 620, Active-duty lists; 10 U.S.C. 617, Reports of selection boards; and E.0. 9397 (SSN), as amended."

* * * * *

NOTIFICATION PROCEDURE:

Delete entry and replace with "Individuals seeking to determine whether information about themselves is contained in this system should address written inquiries to the Commander, Navy Personnel Command (PERS–OOJ), 5720 Integrity Drive, Millington, TN 38055–0000.

Requests should contain full name, rank, Social Security Number (SSN), designator, address and signature. The system manager may require an original signature or a notarized signature as a means of proving the identity of the individual requesting access to the records.

The individual may visit the Navy Personnel Command (PERS–OOJ), 5720 Integrity Drive, Millington, TN 38055–0000. Advance notification is required for personal visits. Proof identification will consist of military identification card."

RECORD ACCESS PROCEDURES:

Delete entry and replace with "Individuals seeking access to information about themselves contained in this system should address written inquiries to the Commander, Navy Personnel Command (PERS–OOJ), 5720 Integrity Drive, Millington, TN 38055–0000.

Requests should contain full name, rank, Social Security Number (SSN), designator, address and signature. The system manager may require an original signature or a notarized signature as a means of proving the identity of the individual requesting access to the records.

The individual may visit the Commander, Navy Personnel Command (PERS–OOJ), 5720 Integrity Drive, Millington, TN 38055–0000. Advance notification is required for personal visits. Proof of identification will consist of military identification card."

* * * * *

N01301–2

SYSTEM NAME:

On-Line Distribution Information System (ODIS).

SYSTEM LOCATION:

Defense Information Systems Agency (DISA)—Defense Enterprise Computing Center Mechanicsburg, 5450 Carlisle Pike, Mechanicsburg, PA 17050–0975.

CATEGORIES OF INDIVIDUALS COVERED BY THE SYSTEM:

All Navy personnel on active duty including reservists on active duty more than 60 days.

CATEGORIES OF RECORDS IN THE SYSTEM:

Personnel records in automated form concerning qualifications, assignment, placement, career development, education, training, recall, release from active duty, advancement, performance, retention, reenlistment, separation, morale, personal affairs, benefits, entitlements, and administration.

AUTHORITY FOR MAINTENANCE OF THE SYSTEM:

5 U.S.C. 301, Department Regulations; 10 U.S.C. 620, Active-duty lists; 10 U.S.C. 617, Reports of selection boards; and E.0. 9397 (SSN), as amended.

PURPOSE(S):

To assist Navy officials and employees in the classification, qualification determinations, assignment, placement, career development, education, training, recall and release of officer personnel pursuant to meet manpower allocations and requirements.

ROUTINE USES OF RECORDS MAINTAINED IN THE SYSTEM, INCLUDING CATEGORIES OF USERS AND THE PURPOSES OF SUCH USES:

In addition to those disclosures generally permitted under 5 U.S.C. 552a(b) of the Privacy Act of 1974, these records contained therein may specifically be disclosed outside the DoD as a routine use pursuant to 5 U.S.C. 552a(b)(3) as follows:

The DoD 'Blanket Routine Uses' that appear at the beginning of the Navy's compilation of systems of records notices apply to this system.

POLICIES AND PRACTICES FOR STORING, RETRIEVING, ACCESSING, RETAINING, AND DISPOSING OF RECORDS IN THE SYSTEM:

STORAGE:

Paper records in file folders and electronic storage media.

RETRIEVABILITY:

Records may be retrieved by Social Security Number (SSN) and/or name.

SAFEGUARDS:

Computer terminals are located in restricted areas accessible only to authorized persons that are properly screened, cleared and trained. Manual records and computer printouts are available only to authorized personnel having an official need-to-know.

RETENTION AND DISPOSAL:

Records are generally maintained until superseded, or for a period of 2 years or until release from active duty and disposed of by burning or shredding.

SYSTEM MANAGER(S) AND ADDRESS:

Commander, Navy Personnel Command (PERS–455), 5720 Integrity Drive, Millington, TN 38055–0455.

NOTIFICATION PROCEDURE:

Individuals seeking to determine whether information about themselves is contained in this system should address written inquiries to the Commander, Navy Personnel Command (PERS–OOJ), 5720 Integrity Drive, Millington, TN 38055–0000.

Requests should contain full name, rank, Social Security Number (SSN), designator, address and signature. The system manager may require an original signature or a notarized signature as a means of proving the identity of the individual requesting access to the records.

The individual may visit the Navy Personnel Command (PERS–OOJ), 5720 Integrity Drive, Millington, TN 38055–0000. Advance notification is required for personal visits. Proof identification will consist of military identification card.

RECORD ACCESS PROCEDURES:

Individuals seeking access to information about themselves contained in this system should address written inquiries to the Commander, Navy Personnel Command (PERS–OOJ), 5720 Integrity Drive, Millington, TN 38055–0000.

Requests should contain full name, rank, Social Security Number (SSN), designator, address and signature. The system manager may require an original signature or a notarized signature as a means of proving the identity of the individual requesting access to the records.

The individual may visit the Commander, Navy Personnel Command (PERS–OOJ), 5720 Integrity Drive, Millington, TN 38055–0000. Advance notification is required for personal visits. Proof of identification will consist of military identification card.

CONTESTING RECORD PROCEDURES:

The Navy's rules for accessing records, and for contesting contents and appealing initial agency determinations are published in Secretary of the Navy Instruction 5211.5; 32 CFR part 701; or may be obtained from the system manager.

RECORD SOURCE CATEGORIES:

Personnel Service Jackets; records of the officer promotion system; officials and employees of the Department of the Navy, Department of Defense, and components thereof, in performance of their official duties and as specified by

current instructions and regulations promulgated by competent authority; education institutions; official records of professional qualifications; general correspondence concerning the individual.

EXEMPTIONS CLAIMED FOR THE SYSTEM:

None.

[FR Doc. 2010–18251 Filed 7–23–10; 8:45 am]

BILLING CODE 5001–06–P

DEPARTMENT OF DEFENSE

Department of the Navy

[Docket ID: USN–2010–0026]

Privacy Act of 1974; System of Records

AGENCY: U.S. Marine Corps, Department of the Navy, DoD.

ACTION: Notice to delete seven systems of records.

SUMMARY: The U.S. Marine Corps proposes to delete seven systems of records notices from its existing inventory of record systems subject to the Privacy Act of 1974, (5 U.S.C. 552a), as amended.

DATES: This proposed action will be effective without further notice on August 25, 2010, unless comments are received which result in a contrary determination.

ADDRESSES: You may submit comments, identified by docket number and title, by any of the following methods:

• *Federal Rulemaking Portal: http://www.regulations.gov.* Follow the instructions for submitting comments.

• *Mail:* Federal Docket Management System Office, Room 3C843 Pentagon, 1160 Defense Pentagon, Washington, DC 20301–1160.

Instructions: All submissions received must include the agency name and docket number for this **Federal Register** document. The general policy for comments and other submissions from members of the public is to make these submissions available for public viewing on the Internet at *http://www.regulations.gov* as they are received without change, including any personal identifiers or contact information.

FOR FURTHER INFORMATION CONTACT: Ms. Tracy Ross at (703) 614–4008.

SUPPLEMENTARY INFORMATION: The Office of the Secretary of Defense systems of records notices subject to the Privacy Act of 1974, (5 U.S.C. 552a), as amended, have been published in the **Federal Register** and are available from the Headquarters, U.S. Marine Corps, FOIA/PA Section (ARSF), 2 Navy Annex, Room 3134, Washington, DC 20380–1775.

The U.S. Marine Corps proposes to delete seven systems of records notices from its inventory of record systems subject to the Privacy Act of 1974 (5 U.S.C. 552a), as amended. The proposed deletion is not within the purview of subsection (r) of the Privacy Act of 1974, (5 U.S.C. 552a), as amended, which requires the submission of a new or altered system report.

Dated: July 21, 2010.

Mitchell S. Bryman,

Alternate OSD Federal Register Liaison Officer, Department of Defense.

Deletions

M01070–7, Marine Corps Mobilization Processing System (MCMPS) Records, (April 2, 2010; 75 FR 16760).

M01070–6, Marine Corps Official Military Personnel Files (ODI–RMS), (March 17, 2008; 73 FR 14234).

M01080–1, Total Force Administration System Secure Personnel Accountability (TFAS SPA), (December 31, 2008; 73 FR 80379).

M01080–3, Total Force Historical Data Warehouse (TFDW), (December 17, 2009; 74 FR 66961).

M01080–2, U.S. Marine Corps Manpower Personnel Analysis Records, (December 31, 2008; 73 FR 80379).

M01040–1, Marine Corps Total Force Retention System Records (TFRS), (December 2, 2008; 73 FR 73259).

M01040–2, Marine Corps Total Force System (MCTFS), (March 23, 2009; 74 FR 12118).

Reason

These records are covered under system of records notice M01040–3, Marine Corps Manpower Management Information System (MCMMIS), April 29, 2010, 75 FR 22570, therefore these notices can be deleted.

[FR Doc. 2010–18249 Filed 7–23–10; 8:45 am]

BILLING CODE 5001–06–P

DEPARTMENT OF EDUCATION

Office of Vocational and Adult Education; Overview Information; Financial Education for College Access and Success Program; Notice Inviting Applications for New Awards for Fiscal Year (FY) 2010

Catalog of Federal Domestic Assistance (CFDA) Number: 84.215W.

Dates: Applications Available: July 26, 2010.

Deadline for Notice of Intent to Apply: August 5, 2010.

Deadline for Transmittal of Applications: September 9, 2010.

Full Text of Announcement

I. Funding Opportunity Description

Purpose of Program: The Financial Education for College Access and Success program is authorized under the Fund for the Improvement of Education Program (FIE), title V, part D, subpart 1, sections 5411 through 5413 of the Elementary and Secondary Education Act of 1965, as amended (ESEA) (20 U.S.C. 7243–7243b). FIE supports nationally significant programs to improve the quality of elementary and secondary education at the State and local levels and help all children meet challenging State academic content and student academic achievement standards. Through the Financial Education for College Access and Success Program, we will support State-led efforts to develop, implement, and evaluate the effectiveness of personal finance instructional materials and corresponding teacher training, with the express purpose of providing high school students with knowledge and skills to make sound financial aid and other personal finance decisions, particularly in relation to obtaining access to, persisting in, and completing postsecondary education.

Background: President Barack Obama, in his February 24, 2009 address to a Joint Session of Congress, asked every American to commit to at least one year or more of higher education or career training, in a community college, in a four-year postsecondary institution, through career and technical education courses, or in an apprenticeship. President Obama stated that "This country needs and values the talents of every American", and set a new goal that by 2020, the United States of America would once again have the highest proportion of college graduates in the world.

One of the barriers to achieving this goal is the lack of financial literacy in America, especially among youth. Studies indicate that many Americans do not have the skills they need to make sound financial decisions, including decisions about postsecondary education, for themselves or their families. For example—

(1) Debt literacy—an understanding of how borrowing money works and the ability to perform related calculations—is low across age groups, and this has been found to correlate with making unfavorable borrowing choices; [1]

[1] Lusardi, Annamaria, and Tufano, Peter. "Debt Literacy, Financial Experience, and Overindebtedness." Preliminary Draft, 2008.

(2) High school students generally have low levels of financial literacy across a variety of topics according to their results on personal finance exams; [2]

(3) Families often overestimate the price of college and believe it is out of their financial reach, perhaps confusing advertised and actual prices; [3]

(4) Nearly two million low- and moderate-income undergraduates do not submit a Free Application for Federal Student Aid (FAFSA) to apply for Federal financial aid, even though many of them are eligible for Pell Grants, which they would not have to repay; [4] and

(5) A 2009 report by The Institute for College Access and Success found that 64 percent of students who took on costly private loans had not yet exhausted their eligibility for more flexible and affordable Federal loans.[5]

Together, these problems have major consequences for students. Only 31 percent of students from low-income families attend some form of postsecondary education, as compared to 56 percent of students from middle-income families and 75 percent of students from high-income families.[6] Once students enroll in postsecondary education, one of the primary reasons they drop out of college is because they lack the financial resources to continue.[7] And students who do graduate from college finish with more and more accumulated credit card and student loan debt each year.[8]

Research has also shown that students appear to receive limited support from counselors and teachers in the area of personal finance decision-making. A Public Agenda survey of young adults found that they give very low marks to guidance counselors when it comes to preparing them to make decisions about college.[9] A national survey of teachers conducted by the University of Wisconsin found that teachers are overwhelmingly underprepared to teach personal finance to their students.[10] In the teacher study, 64 percent of teachers responding to the survey said they felt unqualified to utilize their State's personal finance standards. When asked about professional development needs, the teachers listed financial education subject matter and pedagogy, ways to integrate financial concepts throughout multiple disciplines, and how to use the State standards as those areas in which further professional development was needed.

Even though there have been a number of financial literacy efforts initiated across the country, and notwithstanding the growing focus on improving awareness and delivery of student financial aid, too few financial literacy initiatives prepare teachers to provide students with financial decision-making skills that lead to college access and success. Therefore, the Secretary is establishing an absolute priority and associated requirements for applications that propose to develop, implement, and evaluate personal finance instructional materials and corresponding teacher training toward that end.

While the Secretary recognizes, as do many teachers, that students should begin learning about personal finance and the benefits of postsecondary education in early elementary grades, this program focuses on high school students because high school is a time when most students make critical decisions related to postsecondary education.[11]

The Secretary additionally recognizes that, to be most successful, this effort to improve students' financial literacy must leverage other resources to ensure effective implementation and continuous improvement. For this reason, the Secretary is establishing a competitive preference priority for States that propose to provide funds or in-kind contributions to support the project through existing State and local resources, or funding from philanthropic organizations or private sector sources.

Priorities: We are establishing these priorities for the FY 2010 grant competition, and any subsequent year in which we make awards from the list of unfunded applicants from this competition, in accordance with section 437(d)(1) of the General Education Provisions Act (GEPA), 20 U.S.C. 1232(d)(1).

Absolute Priority: Under 34 CFR 75.105(c)(3) we consider only applications that meet this priority.

This priority is:

Absolute Priority—Financial Education for College Access and Success Program.

Under this priority, the Department provides funding to support projects that are designed to develop, implement, and evaluate (1) personal finance instructional materials that focus on knowledge and skills to help high school students in high-need LEAs make sound financial decisions regarding student financial aid and other financial matters in order to obtain access to, persist in, and complete postsecondary education; and (2) training that prepares teachers to integrate the instructional materials in one or more high school courses (*e.g.,* career and technical education (CTE) courses, social studies, economics, mathematics, personal finance).

Competitive Preference Priority: This priority is a competitive preference priority. Under 34 CFR 75.105(c)(2)(i) we award up to an additional 5 points to a State, depending on how well the State's application meets this priority.

This priority is:

Competitive Preference Priority—Commitment of Additional Funding to the Project.

We give competitive preference to applications where States propose to provide funds or in-kind contributions to support the project through existing State and local resources, or funding from philanthropic organizations or private sector sources (*See* 34 CFR 80.24 for information on cost sharing and third party in-kind contributions). For each 10 percent of the State's proposed budget that will be contributed from such other sources, up to a maximum of 50 percent, 1 point will be awarded, up to a maximum of 5 points. Non-Federal contributions may include in-kind contributions such as facilities, equipment, supplies, services, and other resources.

---

[2] Mandell, Lewis "Results of the 2008 National Jump$tart Coalition: Survey of College Seniors and College Students," Jump$tart Coalition® for Personal Literacy, 2008.

The National Financial Capability Challenge at, *http://www.challenge.treas.gov.*

[3] *Getting Ready to Pay for College: What Students and Their Parents Know About the Cost of College Tuition and What They Are Doing to Find Out* U.S., Department of Education, National Center for Educational Statistics, 2003.

[4] American Council on Education. *Missed Opportunities Revised: New Information on Students Who Do Not Apply for Financial Aid.* Issue Brief, February 2006.

[5] The Project on Student Debt: An Initiative for College Access and Success. *Private Loans: Facts and Trends,* Aug. 2009.

[6] Institute for Higher Education Policy, *Cost Perceptions and College-Going for Low-Income Students.* Research Policy Brief, Spring 2010.

[7] Johnson, Jean, and Rochkind, Jon. "With Their Whole Lives Ahead of Them: Myths and Realities About Why So Many Students Fail to Finish College." A Public Agenda Report for the Bill and Melinda Gates Foundation, 2009.

[8] SallieMae Champions for Higher Education. *How Undergraduate Students Use Credit Cards: Sallie Mae's National Study of Usage Rates and Trends 2009.* 2009.

The Project on Student Debt: An Initiative for College Access and Success. *Student Debt and the Class of 2008*. 2009.

[9] Johnson, Jean, and Rochkind, Jon. "With Their Whole Lives Ahead of Them: Myths and Realities About Why So Many Students Fail to Finish College." A Public Agenda Report for the Bill and Melinda Gates Foundation, 2009.

[10] Way, Wendy L, and Holden, Karen. "Teachers' Background and Capacity to Teach Personal Finance: Results of a National Study." National Endowment for Financial Education, 2010.

[11] Otter, Dan. "Teacher Attitudes and Beliefs About Teaching Financial Literacy." Pollinate, the Teacher Financial Literacy Project, 2010.

Invitational Priority: This priority is an invitational priority. Under 34 CFR 75.105(c)(1) we do not give an application that meets this invitational priority a competitive or absolute preference over other applications.

This priority is:

Invitational Priority—Service-learning.

The Department is interested in applications from States that include the use of service-learning as an approach in support of its project, such as college students engaging with high school students, or high school students engaging with elementary school students, on the topics covered by this notice.

Application Requirements: We are establishing these application requirements for the FY 2010 grant competition, and any subsequent year in which we make awards from the list of unfunded applicants from this competition, in accordance with section 437(d)(1) of GEPA, 20 U.S.C. 1232(d)(1).

(a) To be considered for funding under the Financial Education for College Access and Success program, a State must meet the absolute priority and the requirements specified in the priority; and demonstrate that its proposed project will improve the ability of high school students to make sound financial decisions regarding student financial aid and other financial matters in order to obtain access to, persist in, and complete postsecondary education.

(b) The State's application must describe a plan for the entire 4-year project period, including goals and objectives for each year of the project. To this end, the State must demonstrate, in the narrative section of the application, how it would meet the following requirements.

Development and implementation of instructional materials.

The State must demonstrate how—

(a) The personal finance instructional materials will be developed as open education resources, which are teaching, learning, and research resources that reside in the public domain or have been released under an intellectual property license that permits their free use or repurposing by others, designed to be—

(1) Multi-unit, portable instructional materials that can be implemented as stand-alone units, integrated into one or more high school courses, and, to the extent feasible and appropriate, integrated to form a comprehensive personal finance curriculum that covers a variety of college-related personal finance topics;

(2) Interactive and experiential (*i.e.,* activity-focused, not primarily lecture-focused, including the use of real documents when possible and connecting with social networking opportunities and interfaces), and enable personalization for each student;

(3) Based on research on effective instructional design that is informed by relevant areas of economic research, including the psychology of decision-making and behavioral economics;

(4) Designed to incorporate online components; and

(5) Updated regularly, with input from teachers and other stakeholders involved in this project, to keep pace with changes in student financial aid information and with online and mobile technologies, such as online banking, electronic credit reports, and mobile budgeting alerts;

(b) The instructional materials will be developed to—

(1) Promote the basic numeracy and number sense skills students need to make sound financial decisions, including, but not limited to—

(i) Proportional reasoning;

(ii) Interest rates, charges, and compounding;

(iii) Inflation; and

(iv) The comparison of costs for different financial products and services;

(2) Align with the appropriate State standards, including the State's mathematics and personal finance standards;

(3) At a minimum, cover—

(i) Federal student aid, including the role of the FAFSA; the types of aid available, including grants, loans, and work-study; Federal loan repayment options, such as income-based repayment and public service loan forgiveness; and a comparison of Federal student aid and other college financing options, such as credit cards and private loans, and Federal grants and work-study;

(ii) Scholarships;

(iii) Credit products, including—

(A) Credit cards and debit cards, and proper handling of these cards to avoid bad credit; and

(B) Credit scores and credit reports as they relate to borrowing ability and borrowing costs, insurability, and employability;

(iv) Financial institutions, services, and products available to students and the risks and costs associated with them, including—

(A) Banks and credit unions and the proper handling of accounts to avoid fees or being denied access to accounts; and

(B) Alternative financial services, such as payday lenders and check-cashing services, and the fees associated with these services;

(v) The costs and benefits of postsecondary education, including—

(A) The advertised price versus net price and the role of State and institutional financial aid;

(B) Projected earnings for different careers, with and without postsecondary education; and

(C) Projected debt and related interest costs for different postsecondary programs at various institutions;

(vi) United States Department of Veterans Affairs Education Benefits;

(vii) Segal AmeriCorps Education Awards;

(viii) Student and family contributions to education expenses from income and savings; and

(ix) Taxes, including Federal and State income tax returns;

(c) The State will make use of available materials and other resources from the Federal government, States, national organizations, or other sources, as appropriate; and best practices in developing, disseminating, and promoting use of open education resources, including optimal licensing arrangements, that would be used to inform the development and use of the instructional materials;

(d) The State will design project activities and identify participant schools in a way that takes into account and leverages other courses and programs that provide financial literacy and related instruction (such as TRIO Talent Search, TRIO Upward Bound, GEAR–UP, and College Access Challenge Grants). In addition, where available, the State should provide information on whether secondary schools and LEAs in the State will be participating in the FAFSA completion project (*http://www2.ed.gov/finaid/info/apply/fafsa-project.html*) to identify students who have not completed a FAFSA, in order to better target assistance, and describe how this information will be used when identifying participant schools and conducting the required project evaluation described elsewhere in this notice;

(e) The State will identify or develop interim and summative assessments that produce valid and reliable information on student progress in the mastery of the content included in the proposed personal finance instructional materials and could be used for the program evaluation; and

(f) The State will—

(1) Identify one or more high school courses into which the proposed instructional materials are intended and proposed to be integrated. The primary

venue for the instructional materials must be high school classrooms. However, States may propose to implement the instructional materials in additional settings, such as after-school programs, and student financial aid workshops;

(2) Ensure that the proposed instructional materials in the selected school courses will be of sufficient duration and offered to a sufficient number of students attending schools in high-need LEAs to determine the effectiveness of the project and include in the application an estimate of the number of students expected to enroll in the selected school courses in each participating high-need LEA and the number of teachers who would be teaching students in the selected courses. For the purposes of this competition, we are using the definition of *high-need LEA* used in section 14013 of the American Recovery and Reinvestment Act of 2009 (ARRA), which is an LEA (a) that serves not fewer than 10,000 children from families with incomes below the poverty line; or (b) for which not less than 20 percent of the children served by the LEA are from families with incomes below the poverty line; and

(3) Identify two or more high-need LEAs in which the instructional materials would be implemented, beginning in year 2, and include a list of these high-need LEAs in its application. By the end of year 1, and continuing each year for years 2 through 4 of the project, the grantee must obtain written commitment from each participating LEA, or a school within an LEA if the entire LEA will not participate, that will implement the instructional materials.

Teacher training on personal finance instructional materials.

The State must demonstrate how—

(a) The personal finance training provided to high school teachers who would be teaching the personal finance instructional materials to students is of sufficient quality, intensity, and duration to lead to improvements in practice among the teachers that receive the training, and include in the application an estimated number of teachers to be trained each year during the project period;

(b) Training, ongoing support, and technical assistance will be provided to teachers and LEAs within the State, such as providing opportunities for collaboration among teachers, using a train-the-trainer model whereby teachers train other teachers, and using distance learning components, such as interactive television; and

(c) The State will provide incentives for high school teacher participation in personal finance training, such as by providing participating teachers with stipends, graduate degree credit, or Continuing Education Units for participating in the training. The primary audience for the training must be high school teachers. However, in furtherance of project goals and purposes, States may also propose to provide personal finance training to individuals other than high school teachers, including, but not limited to, guidance counselors and after-school program staff.

Project Team.

The State must—

(a) Demonstrate that the project team proposed by the State that will work with the State to carry out the project—

(1) Has experience and expertise in each of the following areas—

(i) Instructional materials development;

(ii) Teacher training;

(iii) Program evaluation;

(iv) Financial literacy;

(v) Financial aid;

(vi) Student debt; and

(vii) College access and success programs;

(2) Includes individuals who represent the needs of or work with students in high-need LEAs;

(3) Includes representatives from—

(i) State agencies administering elementary and secondary education, career and technical education (CTE), and postsecondary education (both two- and four-year institutions);

(ii) State agencies, commissions, or other entities focused explicitly on financial literacy, college access, or student financial aid issues (e.g., Treasurer, Comptroller, Department of Banking, Corporation for National and Community Service State Office and Commission, the State agency that administers the College Access Challenge Grant Program); and, at the discretion of the State,

(iii) Institutions of higher education (IHEs), including professors or financial aid administrators;

(iv) LEAs (including high-need LEAs), including superintendents, principals, and teachers; and

(v) Non-profit organizations, companies, or philanthropic organizations; and

(b) Include in its application—

(1) The title and position description of each confirmed and potential member of the project team, including the project director, principal investigator, and other key project personnel;

(2) A description of the roles and responsibilities of each member;

(3) A description of how the project team will function, including how the project team will elicit ongoing input from stakeholders and develop a collaborative network of stakeholders to ensure the continuing success of the project;

(4) When and how often the team will meet; and

(5) A resume for each of the confirmed members of the project team (as an attachment or appendix to the application).

State's existing financial literacy activities.

The State must describe—

(a) The State's existing financial literacy education requirements, including the State's personal finance standards and current State requirements for their implementation at the LEA level; and

(b) The State's existing K–12 State efforts related to financial literacy education activities and college access and success, such as—

(1) Teacher training, curriculum, and assessment development;

(2) High school courses, or course components;

(3) Extracurricular programs, such as college readiness and student financial aid training; and

(4) The collection of assessment data on student outcomes for students enrolled in those courses or programs.

Project evaluation.

The State must demonstrate that—

(a) The State will have a comprehensive plan for evaluating the effectiveness of the project in preparing high school students with knowledge and skills to make sound financial decisions regarding student financial aid and other financial matters in order to obtain access to, persist in, and complete postsecondary education; and for evaluating whether the training provided to teachers adequately prepared them to integrate the personal finance instructional materials into courses and effectively instruct students using the instructional materials. To this end, the State, in its application, must—

(1) Propose an evaluation design that will assess the effects of the project on participant outcomes. Where feasible, applicants must propose an experimental or quasi-experimental evaluation design for the project that will allow an accurate assessment of the effect of the project on participating students and teachers relative to appropriate comparison or control groups. The design should take into account the participation in other courses and programs (such as TRIO Talent Search, TRIO Upward Bound, GEAR UP, and College Access Challenge

Grants) that provide students with financial literacy and related instruction. At a minimum, the design must assess the effects of the project on participant outcomes by administering a pre-test and multiple post-tests.

(2) Describe the State's proposed sampling plans, data collection methodology (including any plans to use information available through State longitudinal data systems), methodology for identifying appropriate control or comparison groups, strategies for dealing with missing data, assessment instruments, and data analysis plans in sufficient detail to allow reviewers of applications to judge the appropriateness of the proposed methods; and

(b) The State's project evaluation plan must, at a minimum, include plans to—

(1) Measure the effect of the project on students' knowledge and behaviors, including rates of FAFSA completion (the Department will assist entities that participate in the FAFSA completion project with tracking FAFSA completion, and hopes to expand this program in the future), college enrollment, decisions regarding financial aid, and use of financial products and services; the evaluation plan may also measure the effect of the program on participating students' attitudes;

(2) Measure the effect of the project on the knowledge, attitudes, and instructional skills of participating teachers;

(3) Annually examine project performance by comparing actual accomplishments with the goals and objectives established for each project year;

(4) Describe how data will be used to manage project implementation, inform decision-making, engage stakeholders, and measure success; and

(5) Ensure that the use of data will be consistent with the requirements and protections contained in the Family Educational Rights and Privacy Act (FERPA).

Dissemination.

The State must demonstrate that it will work closely with the Department to disseminate and promote the use of personal finance instructional materials and teacher training materials found to be effective, including implementing strategies to:

(a) Make materials widely available and accessible to LEAs within the State—

(i) Through open education resource repositories, Web sites, and other mechanisms, so others can use and customize the materials, such as having them translated into multiple languages, and for use in multiple settings; and

(ii) At low or no cost to participating LEAs for hard-copy materials, and at no cost for online components;

(b) Make available to other States through open education resource repositories, Web sites, and other mechanisms, its personal finance instructional materials, teacher training materials, and other practical information about the project that would be useful to other States in their efforts to implement financial literacy programs; and

(c) Ensure that all project materials available to States, LEAs, teachers, and, if appropriate, students will be accessible to individuals with disabilities consistent with the requirements and protections contained in Section 504 of the Rehabilitation Act of 1973, as amended.

Waiver of Proposed Rulemaking: Under the Administrative Procedure Act (5 U.S.C. 553), the Department generally offers interested parties the opportunity to comment on proposed priorities, definitions, and requirements. Section 437(d)(1) of GEPA, however, allows the Secretary to exempt from rulemaking requirements regulations governing the first grant competition under a new or substantially revised program authority. This is the first grant competition for the Financial Education for College Access and Success program and, therefore, qualifies for this exemption. In order to ensure timely grant awards, the Secretary has decided to forgo public comment on the priorities, definitions, and requirements under section 437(d)(1) of GEPA. These priorities, definitions, and requirements will apply to the FY 2010 grant competition and any subsequent year in which we make awards based on the list of unfunded applicants from this competition.

Program Authority: 20 U.S.C. 7243–7243b.

Applicable Regulations: The Education Department General Administrative Regulations (EDGAR) in 34 CFR parts 75, 77, 79, 80, 81, 82, 84, 85, 86, 97, 98, and 99.

Note: The regulations in 34 CFR part 79 apply to all applicants except Federally recognized Indian tribes.

Note: The regulations in part 86 apply to institutions of higher education only.

II. Award Information

Type of Award: Discretionary grants.

Estimated Available Funds: $1,700,000.

Estimated Average Size of Award: $1,700,000.

Estimated Number of Awards: 1.

Note: The Department is not bound by any estimates in this notice.

Project Period: Up to 48 months. Applicants under this competition are required to provide detailed budget information for each year of the proposed project and for the total grant. The Department will negotiate funding levels for each 12-month period of the grant at the time of the award.

Note: The Secretary has concluded that 4-year awards are necessary for the grantee to fulfill the purpose of the Financial Education for College Access and Success Program. As outlined in this notice, 4-year funding will: (a) Allow the grantee to develop the instructional materials and assessments; (b) allow time for the instructional materials, teacher training, and assessments to be used with a sufficient number of participants to determine their effectiveness; and (c) allow the grantee sufficient time to collect student and teacher outcome data.

III. Eligibility Information

1. *Eligible Applicants:* State educational agencies (SEAs), as defined in section 9101(41) of the ESEA, that have included personal finance in their State education standards and have included in their applications documentation that they have such standards.

2. *Cost Sharing or Matching:* This competition does not require cost sharing or matching.

IV. Application and Submission Information

1. *Address to Request Application Package:* Laura Messenger, U.S. Department of Education, 400 Maryland Avenue, SW., room 11028, Potomac Center Plaza, Washington, DC 20202–7241. Telephone: (202) 245–7840 or by e-mail: *laura.messenger@ed.gov.*

If you use a telecommunications device for the deaf (TDD), call the Federal Relay Service (FRS), toll free, at 1–800–877–8339.

Individuals with disabilities can obtain a copy of the application package in an accessible format (*e.g.,* braille, large print, audiotape, or computer diskette) by contacting the program contact person listed in this section.

2. *Content and Form of Application Submission:*

Requirements concerning the content of an application, together with the forms you must submit, are in the application package for this competition.

Page Limit: The application narrative (Part III of the application) is where you, the applicant, address the selection criteria that reviewers use to evaluate your application.

While you are not required to do so, we strongly suggest that you limit the

application narrative [Part III] to the equivalent of no more than 40 pages using the following standards:

• A "page" is 8.5″ x 11″, on one side only, with 1″ margins at the top, bottom, and both sides.

• Double space (no more than three lines per vertical inch) all text in the application narrative, including titles, headings, footnotes, quotations, references, and captions, as well as all text in charts, tables, figures, and graphs.

• Use a font that is either 12 point or larger or no smaller than 10 pitch (characters per inch).

• Use one of the following fonts: Times New Roman, Courier, Courier New, or Arial. An application submitted in any other font (including Times Roman or Arial Narrow) will not be accepted.

The suggested page limit does not apply to Part I, the cover sheet; Part II, the budget section, including the narrative budget justification; Part IV, the assurances and certifications; or the one-page abstract, the resumes, the memorandum of understanding, or the match commitment. However, the suggested page limit does apply to all of the application narrative section [Part III].

3. *Submission Dates and Times:*

Applications Available: July 26, 2010.

Deadline for Notice of Intent to Apply: August 5, 2010.

The Department will be able to develop a more efficient process for reviewing grant applications if it has a better understanding of the number of entities that intend to apply for funding under this competition. Therefore, the Secretary strongly encourages each potential applicant to notify the Department by sending a short e-mail message indicating the applicant's intent to submit an application for funding. The e-mail should include only the applicant's intent to submit an application; it does not need to include information regarding the content of the proposed application. This e-mail notification should be sent no later than August 5, 2010 to Laura Messenger at: *laura.messenger@ed.gov.* You must include "FinanceEd Intent to Apply" in the subject line of your electronic message. The notice of intent to apply is optional. We will consider an application submitted by the deadline for transmittal of applications even if the applicant did not provide an e-mail notification of its intent to apply.

Deadline for Transmittal of Applications: September 9, 2010.

Applications for grants under this program must be submitted electronically using the Electronic Grant Application System (e-Application) accessible through the Department's e-Grants site. For information (including dates and times) about how to submit your application electronically, or in paper format by mail or hand delivery if you qualify for an exception to the electronic submission requirement, please refer to section IV.7. *Other Submission Requirements* of this notice.

We do not consider an application that does not comply with the deadline requirements.

Individuals with disabilities who need an accommodation or auxiliary aid in connection with the application process should contact the person listed under **FOR FURTHER INFORMATION CONTACT** in Section VII of this notice. If the Department provides an accommodation or auxiliary aid to an individual with a disability in connection with the application process, the individual's application remains subject to all other requirements and limitations in this notice.

4. *Intergovernmental Review:* This program is subject to Executive Order 12372 and the regulations in 34 CFR part 79. Information about Intergovernmental Review of Federal Programs under Executive Order 12372 is in the application package for this competition.

5. *Funding Restrictions:* We reference regulations outlining funding restrictions in the Applicable Regulations section of this notice.

6. *Data Universal Numbering System Number, Taxpayer Identification Number, and Central Contractor Registry:* To do business with the Department of Education, (1) you must have a Data Universal Numbering System (DUNS) number and a Taxpayer Identification Number (TIN); (2) you must register both of those numbers with the Central Contractor Registry (CCR), the Government's primary registrant database; and (3) you must provide those same numbers on your application.

You can obtain a DUNS number from Dun and Bradstreet. A DUNS number can be created within one business day.

If you are a corporate entity, agency, institution, or organization, you can obtain a TIN from the Internal Revenue Service. If you need a new TIN, please allow 2–5 weeks for your TIN to become active.

The CCR registration process may take five or more business days to complete. If you are currently registered with the CCR, you may not need to make any changes. However, please make certain that the TIN associated with your DUNS number is correct. Also note that you will need to update your CCR registration on an annual basis. This may take three or more business days to complete.

7. *Other Submission Requirements:* Applications for grants under this competition must be submitted electronically unless you qualify for an exception to this requirement in accordance with the instructions in this section.

a. *Electronic Submission of Applications.*

Applications for grants under the Financial Education for College Access and Success program, CFDA Number 84.215W, must be submitted electronically using e-Application, accessible through the Department's e-Grants Web site at: *http://e-grants.ed.gov.*

We will reject your application if you submit it in paper format unless, as described elsewhere in this section, you qualify for one of the exceptions to the electronic submission requirement and submit, no later than two weeks before the application deadline date, a written statement to the Department that you qualify for one of these exceptions. Further information regarding calculation of the date that is two weeks before the application deadline date is provided later in this section under *Exception to Electronic Submission Requirement.*

While completing your electronic application, you will be entering data online that will be saved into a database. You may not e-mail an electronic copy of a grant application to us.

Please note the following:

• You must complete the electronic submission of your grant application by 4:30:00 p.m., Washington, DC time, on the application deadline date. E–Application will not accept an application for this program after 4:30:00 p.m., Washington, DC time, on the application deadline date. Therefore, we strongly recommend that you do not wait until the application deadline date to begin the application process.

• The hours of operation of the e-Grants Web site are 6:00 a.m. Monday until 7:00 p.m. Wednesday; and 6:00 a.m. Thursday until 8:00 p.m. Sunday, Washington, DC time. Please note that, because of maintenance, the system is unavailable between 8:00 p.m. on Sundays and 6:00 a.m. on Mondays, and between 7:00 p.m. on Wednesdays and 6:00 a.m. on Thursdays, Washington, DC time. Any modifications to these hours are posted on the e-Grants Web site.

• You will not receive additional point value because you submit your application in electronic format, nor will we penalize you if you qualify for an exception to the electronic submission requirement, as described elsewhere in this section, and submit your application in paper format.

• You must submit all documents electronically, including all information you typically provide on the following forms: the Application for Federal Assistance (SF 424), the Department of Education Supplemental Information for SF 424, the Financial Education for College Access and Success Budget Spreadsheet(s), and all necessary assurances and certifications. You must attach any narrative sections of your application as files in a .DOC (document), .RTF (rich text), or .PDF (Portable Document) format. If you upload a file type other than the three file types specified in this paragraph or submit a password protected file, we will not review that material.

• Your electronic application must comply with any page limit requirements described in this notice.

• Prior to submitting your electronic application, you may wish to print a copy of it for your records.

• After you electronically submit your application, you will receive an automatic acknowledgment that will include a PR/Award number (an identifying number unique to your application).

• Within three working days after submitting your electronic application, fax a signed copy of the SF 424 to the Application Control Center after following these steps:

(1) Print SF 424 from e-Application.

(2) The applicant's Authorizing Representative must sign this form.

(3) Place the PR/Award number in the upper right hand corner of the hard-copy signature page of the SF 424.

(4) Fax the signed SF 424 to the Application Control Center at (202) 245–6272.

• We may request that you provide us original signatures on other forms at a later date.

Application Deadline Date Extension in Case of e-Application Unavailability: If you are prevented from electronically submitting your application on the application deadline date because e-Application is unavailable, we will grant you an extension of one business day to enable you to transmit your application electronically, by mail, or by hand delivery. We will grant this extension if—

(1) You are a registered user of e-Application, and you have initiated an electronic application for this competition; and

(2)(a) E–Application is unavailable for 60 minutes or more between the hours of 8:30 a.m. and 3:30 p.m., Washington, DC time, on the application deadline date; or

(b) E–Application is unavailable for any period of time between 3:30 p.m. and 4:30:00 p.m., Washington, DC time, on the application deadline date.

We must acknowledge and confirm these periods of unavailability before granting you an extension. To request this extension or to confirm our acknowledgment of any system unavailability, you may contact either (1) the person listed elsewhere in this notice under *For Further Information Contact* (see VII. Agency Contact) or (2) the e-Grants help desk at 1–888–336–8930. If e-Application is unavailable due to technical problems with the system and, therefore, the application deadline is extended, an e-mail will be sent to all registered users who have initiated an e-Application. Extensions referred to in this section apply only to the unavailability of e-Application.

Exception to Electronic Submission Requirement: You qualify for an exception to the electronic submission requirement and may submit your application in paper format if you are unable to submit an application through e-Application because—

• You do not have access to the Internet; or

• You do not have the capacity to upload large documents to e-Application; and

• No later than two weeks before the application deadline date (14 calendar days; or, if the fourteenth calendar day before the application deadline date falls on a Federal holiday, the next business day following the Federal holiday), you mail or fax a written statement to the Department, explaining which of the two grounds for an exception prevents you from using the Internet to submit your application. If you mail your written statement to the Department, it must be postmarked no later than two weeks before the application deadline date. If you fax your written statement to the Department, we must receive the faxed statement no later than two weeks before the application deadline date.

Address and mail or fax your statement to: Laura Messenger, U.S. Department of Education, 400 Maryland Avenue, SW., PCP, room 11028, Washington, DC 20006–8524. FAX: (202) 245–7170.

Your paper application must be submitted in accordance with the mail or hand delivery instructions described in this notice.

b. *Submission of Paper Applications by Mail.*

If you submit your application in paper format by mail (through the U.S. Postal Service or a commercial carrier), you must mail the original and two copies of your application, on or before the application deadline date, to the Department at the following address: U.S. Department of Education, Application Control Center, Attention: (CFDA Number 84.215W), 400 Maryland Avenue, SW., Washington, DC 20202–4260.

You must show proof of mailing consisting of one of the following:

(1) A legibly dated U.S. Postal Service postmark.

(2) A legible mail receipt with the date of mailing stamped by the U.S. Postal Service.

(3) A dated shipping label, invoice, or receipt from a commercial carrier.

(4) Any other proof of mailing acceptable to the Secretary of the U.S. Department of Education.

If you mail your application through the U.S. Postal Service, we do not accept either of the following as proof of mailing:

(1) A private metered postmark.

(2) A mail receipt that is not dated by the U.S. Postal Service.

If your application is postmarked after the application deadline date, we will not consider your application.

Note: The U.S. Postal Service does not uniformly provide a dated postmark. Before relying on this method, you should check with your local post office.

c. *Submission of Paper Applications by Hand Delivery.*

If you submit your application in paper format by hand delivery, you (or a courier service) must deliver the original and two copies of your application by hand, on or before the application deadline date, to the Department at the following address: U.S. Department of Education, Application Control Center, Attention: (CFDA Number 84.215W), 550 12th Street, SW., Room 7041, Potomac Center Plaza, Washington, DC 20202–4260.

The Application Control Center accepts hand deliveries daily between 8 a.m. and 4:30:00 p.m., Washington, DC time, except Saturdays, Sundays, and Federal holidays.

Note for Mail or Hand Delivery of Paper Applications: If you mail or hand deliver your application to the Department—

(1) You must indicate on the envelope and—if not provided by the Department—in Item 11 of the SF 424 the CFDA number, including suffix letter, if any, of the competition under which you are submitting your application; and

(2) The Application Control Center will mail to you a notification of receipt of your grant application. If you do not receive this notification within 15 business days from the application deadline date, you should call the U.S. Department of Education Application Control Center at (202) 245–6288.

V. Application Review Information

Selection Criteria: The following selection criteria are from 34 CFR 75.210 in EDGAR.

The maximum score for all the selection criteria is 100 points. The maximum score for each criterion is indicated in parentheses with the criterion. The selection criteria are as follows:

(1) *Significance* (up to 20 points).

(a) The Secretary considers the significance of the proposed project.

(b) In determining the significance of the proposed project, the Secretary considers—

(i) The significance of the problem or issue to be addressed by the proposed project;

(ii) The extent to which the proposed project is likely to build local capacity to provide, improve, or expand services that address the needs of the target population;

(iii) The extent to which the proposed project involves the development or demonstration of promising new strategies that build on, or are alternatives to, existing strategies;

(iv) The likely utility of the products (such as information, materials, processes, or techniques) that will result from the proposed project, including the potential for their being used effectively in a variety of other settings; and

(v) The extent to which the results of the proposed project are to be disseminated in ways that will enable others to use the information or strategies.

(2) *Quality of the project design* (up to 25 points).

(a) The Secretary considers the quality of the design of the proposed project.

(b) In determining the quality of the design of the proposed project, the Secretary considers—

(i) The extent to which the goals, objectives, and outcomes to be achieved by the proposed project are clearly specified and measurable;

(ii) The extent to which the design of the proposed project includes a thorough, high-quality review of the relevant literature, a high-quality plan for project implementation, and the use of appropriate methodological tools to ensure successful achievement of project objectives;

(iii) The extent to which the proposed development efforts include adequate quality controls and, as appropriate, repeated testing of products;

(iv) The extent to which the proposed project will be coordinated with similar or related efforts, and with other appropriate community, State, and Federal resources; and

(v) The extent to which the proposed project is part of a comprehensive effort to improve teaching and learning and support rigorous academic standards for students.

(3) *Quality of project personnel* (up to 15 points).

(a) The Secretary considers the quality of the project personnel who will carry out the proposed project.

(b) In determining the quality of project personnel, the Secretary considers the extent to which the applicant encourages applications for employment from persons who are members of groups that have traditionally been underrepresented based on race, color, national origin, gender, age, or disability;

(c) In addition, the Secretary considers—

(i) The qualifications, including relevant training and experience, of the project director and principal investigator;

(ii) The qualifications, including relevant training and experience, of key project personnel; and

(iii) The qualifications, including relevant training and experience, of project consultants or subcontractors.

(5) *Quality of the management plan* (up to 10 points).

(a) The Secretary considers the quality of the management plan for the proposed project.

(b) In determining the quality of the management plan of the proposed project, the Secretary considers—

(i) The adequacy of the management plan to achieve the objectives of the proposed project on time and within budget, including clearly defined responsibilities, timelines, and milestones for accomplishing project tasks;

(ii) The adequacy of procedures for ensuring feedback and continuous improvement in the operation of the proposed project; and

(iii) The extent to which the time commitments of the project director and principal investigator and other key project personnel are appropriate and adequate to meet the objectives of the proposed project.

(6) *Adequacy of resources* (up to 10 points).

(a) The Secretary considers the adequacy of resources for the proposed project.

(b) In determining the adequacy of resources for the proposed project, the Secretary considers—

(i) The relevance and demonstrated commitment of each partner in the proposed project to the implementation and success of the project;

(ii) The extent to which the costs are reasonable in relation to the objectives, design, and potential significance of the proposed project; and

(iii) The potential for the incorporation of project purposes, activities, or benefits into the ongoing program of the agency or organization at the end of Federal funding.

(7) *Quality of the project evaluation* (up to 20 points).

(a) The Secretary considers the quality of the evaluation to be conducted of the proposed project.

(b) In determining the quality of the evaluation, the Secretary considers—

(i) The extent to which the methods of evaluation are thorough, feasible, and appropriate to the goals, objectives, and outcomes of the proposed project;

(ii) The extent to which the methods of evaluation include the use of objective performance measures that are clearly related to the intended outcomes of the project and will produce quantitative and qualitative data to the extent possible; and

(iii) The extent to which the evaluation will provide guidance about effective strategies suitable for replication or testing in other settings.

VI. Award Administration Information

1. *Award Notices:* If your application is successful, we notify your U.S. Representative and U.S. Senators and send you a Grant Award Notification (GAN). We may notify you informally also.

If your application is not evaluated or not selected for funding, we notify you.

2. *Administrative and National Policy Requirements:* We identify administrative and national policy requirements in the application package and reference these and other requirements in the Applicable Regulations section of this notice.

We reference the regulations outlining the terms and conditions of an award in the Applicable Regulations section in this notice and include these and other specific conditions in the GAN. The GAN also incorporates your approved application as part of your binding commitments under the grant.

3. *Reporting:* At the end of your project period, you must submit a final performance report, including financial information, as directed by the Secretary. If you receive a multi-year award, you must submit an annual

performance report that provides the most current performance and financial expenditure information as directed by the Secretary under 34 CFR 75.118. The Secretary may also require more frequent performance reports under 34 CFR 75.720(c). For specific requirements on reporting, please go to *http://www.ed.gov/fund/grant/apply/appforms/appforms.html.*

4. *Performance Measures:* Under the Government Performance and Results Act of 1993, Federal departments and agencies must clearly describe the goals and objectives of programs, identify resources and actions needed to accomplish goals and objectives, develop a means of measuring progress made, and regularly report on achievement. In order for the Department to be able to determine the overall effectiveness of projects funded under this competition, the grantee must be prepared to measure and report on the following measures of effectiveness:

- The percentage of participating students who make an educationally significant improvement in their understanding of personal finance.
- The percentage of participating low income students who complete the FAFSA.
- The percentage of participating low-income students who enroll in college.

VII. Agency Contact

For Further Information Contact: Laura Messenger, U.S. Department of Education, 400 Maryland Avenue, SW., room 11028, Potomac Center Plaza, Washington, DC 20202–7241. Telephone: (202) 245–7772, or by e-mail: *laura.messenger@ed.gov.* If you use a TDD, call the FRS, toll free, at 1–800–877–8339.

VIII. Other Information

Accessible Format: Individuals with disabilities can obtain this document and a copy of the application package in an accessible format (*e.g.,* braille, large print, audiotape, or computer diskette) on request to the program contact person listed under *For Further Information Contact* in section VII of this notice.

Electronic Access to This Document: You can view this document, as well as all other documents of this Department published in the **Federal Register**, in text or Adobe Portable Document Format (PDF) on the Internet at the following site: *http://www.ed.gov/news/fedregister.* To use PDF you must have Adobe Acrobat Reader, which is available free at this site.

Note: The official version of this document is the document published in the **Federal Register.** Free Internet access to the official edition of the **Federal Register** and the Code of Federal Regulations is available on GPO Access at: *http://www.gpoaccess.gov/nara/index.html.*

Dated: July 21, 2010.

Brenda Dann-Messier,

Assistant Secretary for Vocational and Adult Education.

[FR Doc. 2010–18253 Filed 7–23–10; 8:45 am]

BILLING CODE 4000–01–P

DEPARTMENT OF EDUCATION

Office of Innovation and Improvement; Overview Information; Charter Schools Program (CSP) Grants to Non-State Educational Agencies for Planning, Program Design, and Implementation and for Dissemination; Notice Inviting Applications for New Awards for Fiscal Year (FY) 2010

Catalog of Federal Domestic Assistance (CFDA) Numbers: 84.282B and 84.282C.

Dates:

Applications Available: July 26, 2010.

Deadline for Transmittal of Applications: August 25, 2010.

Deadline for Intergovernmental Review: September 15, 2010.

Full Text of Announcement

I. Funding Opportunity Description

Purpose of Program: The purpose of the CSP is to increase national understanding of the charter school model and to expand the number of high-quality charter schools available to students across the Nation by providing financial assistance for the planning, program design, and initial implementation of charter schools, and to evaluate the effects of charter schools, including their effects on students, student academic achievement, staff, and parents. The non-State educational agency (non-SEA) grants for planning, program design, and implementation, and non-SEA grants for dissemination provide funds for these purposes to eligible applicants in States in which the SEA does not have an approved application under the CSP.

Non-SEA eligible applicants that propose to use grant funds for planning, program design, and implementation must apply under CFDA number 84.282B. Non-SEA eligible applicants that request funds for dissemination activities must apply under CFDA number 84.282C.

Invitational Priorities: For FY 2010, these priorities are invitational priorities. Under 34 CFR 75.105(c)(1) we do not give an application that meets one or both of these invitational priorities a competitive or absolute preference over other applications.

These priorities are:

Invitational Priority 1: High-Quality Charter Schools in High-Need Communities.

The Secretary is particularly interested in supporting high-quality charter schools in one or more high-need communities, particularly urban and rural areas, in which a large proportion or number of public schools have been identified for improvement, corrective action, or restructuring under Title I, Part A of the Elementary and Secondary Education Act of 1965, as amended (ESEA). Applicants should describe the high-need community to be served. Additionally, if the charter school to be opened replicates a high-quality charter school, the applicant should provide evidence of the quality of the model to be replicated, including academic, graduation, and other relevant results.

Invitational Priority 2: Turning Around Persistently Low-Performing Schools.

The Secretary is particularly interested in encouraging applicants to support turning around persistently low-performing schools. To meet this invitational priority, the proposed project should engage in one or both of the following types of activities: (1) The creation of a new charter school in the vicinity of one or more public schools closed as a consequence of an LEA implementing a restructuring plan under section 1116(b)(8) of the ESEA, provided that this is done in coordination with the LEA; or (2) the creation of a new charter school under the restart model of intervention supported under the Department's School Improvement Grants program (see Final Requirements for School Improvement Grants as Amended in January 2010 (January 28, 2010) at *http://www2.ed.gov/programs/sif/faq.html*). Under this model, an LEA converts a school or closes and reopens a school under a charter school operator, a charter management organization (CMO), or an education management organization (EMO) that has been selected through a rigorous review process.

Definitions for Invitational Priorities:

For purposes of these invitational priorities, the following definitions apply:

1. A *CMO,* or charter management organization, is a non-profit organization that operates or manages charter schools by centralizing or sharing certain functions and resources among schools.

2. An *EMO,* or education management organization, is a for-profit or non-profit organization that provides whole-school operation services to an LEA.

3. *High-need community* is (a) a political subdivision of a State, or a portion of a political subdivision of a State, in which at least 50 percent of the children are from low-income families; or (b) a political subdivision of a State that is among the 10 percent of political subdivisions of the State having the greatest numbers of such children.

4. *Low-income family* means a family with an income below the poverty line for the most recent fiscal year for which satisfactory data are available.

Requirements: Applicants approved for funding under this competition must attend an in-person, two-day meeting for project directors during each year of the project. Applicants are encouraged to include the cost of attending this meeting in their proposed budgets.

Program Authority: 20 U.S.C. 7221–7221j.

Applicable Regulations: The Education Department General Administrative Regulations (EDGAR) in 34 CFR parts 74, 75, 76, 77, 79, 80, 81, 82, 84, 85, 86, 97, 98, and 99.

Note: The regulations in 34 CFR part 79 apply to all applicants except federally recognized Indian tribes.

Note: The regulations in 34 CFR part 86 apply only to institutions of higher education.

Note: The regulations in 34 CFR part 99 apply only to educational agencies or institutions.

II. Award Information

Type of Award: Discretionary grants.

Estimated Available Funds: $3,000,000.

Estimated Range of Awards: $140,000–$200,000 per year.

Estimated Average Size of Awards: $175,000 per year.

Estimated Number of Awards: 15–21.

Note: The Department is not bound by any estimates in this notice.

Project Period: Up to 36 months for planning and implementation grants under CFDA number 84.282B. Up to 24 months for dissemination grants under CFDA number 84.282C.

Note: Planning and implementation grants awarded by the Secretary to non-SEA eligible applicants under CFDA number 84.282B will be awarded for a period of up to 36 months, no more than 18 months of which may be used for planning and program design and no more than two years of which may be used for the initial implementation of a charter school. Dissemination grants awarded under CFDA number 84.282C are for a period of up to two years.

III. Eligibility Information

1. *Eligible Applicants:*

(a) *Planning and Initial Implementation grants (CFDA number 84.282B):* Non-SEA eligible applicants in States with a State statute specifically authorizing the establishment of charter schools and in which the SEA elects not to participate in the CSP or does not have an application approved under the CSP.

(b) *Dissemination grants (CFDA number 84.282C):* Charter schools, as defined in section 5210(1) of the ESEA, in States in which the SEA elects not to participate in the CSP or does not have an application approved under the CSP.

Note: A charter school may apply for funds to carry out dissemination activities, whether or not the charter school previously applied for or received funds under the CSP for planning or implementation, if the charter school has been in operation for at least three consecutive years and has demonstrated overall success, including—

(1) Substantial progress in improving student academic achievement;

(2) High levels of parent satisfaction; and

(3) The management and leadership necessary to overcome initial start-up problems and establish a thriving, financially viable charter school.

Note: The term *eligible applicant* is defined in section 5210(3) of the ESEA. The following States currently have approved applications under the CSP: Arizona, Arkansas, California, Colorado, Connecticut, Delaware, District of Columbia, Florida, Georgia, Idaho, Illinois, Indiana, Louisiana, Maryland, Massachusetts, Michigan, Minnesota, Missouri, New Hampshire, New Mexico, New York, Ohio, Oregon, Rhode Island, South Carolina, Tennessee, Texas, Utah, Wisconsin. The non-SEA CSP competitions (CFDA numbers 84.282B and 84.282C) are limited to eligible applicants in States in which the SEA does not have an approved application under the CSP (or will not have an approved application as of October 1, 2010). Non-SEA eligible applicants and charter schools in States with currently approved CSP applications that are interested in participating in the CSP should contact the SEA for information related to the State's CSP subgrant competition.

2. *Cost Sharing or Matching:* This program does not require cost sharing or matching.

IV. Application and Submission Information

1. *Address to Request Application Package:* Soumya Sathya, U.S. Department of Education, 400 Maryland Avenue, SW., room 4W236, Washington, DC 20202–5970. Telephone: (202) 260–0819 or by e-mail: *soumya.sathya@ed.gov.*

If you use a telecommunications device for the deaf (TDD), call the Federal Relay Service (FRS), toll free, at 1–800–877–8339. Individuals with disabilities can obtain a copy of the application package in an accessible format (*e.g.,* Braille, large print, audiotape, or computer diskette) by contacting the program contact person listed in this section.

2. *Content and Form of Application Submission:* Requirements concerning the content of an application, together with the forms you must submit, are in the application package for this competition.

Page Limit: The application narrative (Part III of the application) is where you, the applicant, address the selection criteria that reviewers use to evaluate your application. The Secretary strongly encourages applicants to limit Part III to the equivalent of no more than 50 pages, using the following standards:

- A "page" is 8.5" x 11", on one side only, with 1" margins at the top, bottom, and both sides.
- Double space (no more than three lines per vertical inch) all text in the application narrative, including titles, headings, footnotes, quotations, references, and captions, as well as all text in charts, tables, figures, and graphs.
- Use a font that is either 12 point or larger or no smaller than 10 pitch (characters per inch).
- Use one of the following fonts: Times New Roman, Courier, Courier New, or Arial.

The page limit does not apply to Part I, the cover sheet; Part II, the budget section, including the narrative budget justification; Part IV, the assurances and certifications; or the one-page abstract, the resumes, the bibliography, or the letters of support. However, you must include all of the application narrative in Part III.

3. *Submission Dates and Times:*

Applications Available: July 26, 2010.

Deadline for Transmittal of Applications: August 25, 2010.

Applications for grants under this program must be submitted electronically using the Electronic Grant Application System (e-Application) accessible through the Department's e-Grants site. For information (including dates and times) about how to submit your application electronically, or in paper format by mail or hand delivery if you qualify for an exception to the electronic submission requirement, please refer to section IV.7.

Other Submission Requirements of this notice.

We do not consider an application that does not comply with the deadline requirements.

Individuals with disabilities who need an accommodation or auxiliary aid

in connection with the application process should contact the person listed under *For Further Information Contact* in section VII of this notice. If the Department provides an accommodation or auxiliary aid to an individual with a disability in connection with the application process, the individual's application remains subject to all other requirements and limitations in this notice.

Deadline for Intergovernmental Review: September 15, 2010.

4. *Intergovernmental Review:* This competition is subject to Executive Order 12372 and the regulations in 34 CFR part 79. Information about Intergovernmental Review of Federal Programs under Executive Order 12372 is in the application package for this program.

5. *Funding Restrictions:*

Use of Funds for Post-Award Planning and Design of the Educational Program and Initial Implementation of the Charter School. A non-SEA eligible applicant receiving a grant under this program may use the grant funds only for—

(a) Post-award planning and design of the educational program, which may include (i) refinement of the desired educational results and of the methods for measuring progress toward achieving those results; and (ii) professional development of teachers and other staff who will work in the charter school; and

(b) Initial implementation of the charter school, which may include (i) informing the community about the school; (ii) acquiring necessary equipment and educational materials and supplies; (iii) acquiring or developing curriculum materials; and (iv) other initial operational costs that cannot be met from State or local sources. (20 U.S.C. 7221c(f)(3))

Use of Funds for Dissemination Activities. A charter school may use these funds to assist other schools in adapting the charter school's program (or certain aspects of the charter school's program), or to disseminate information about the charter school through such activities as—

(a) Assisting other individuals with the planning and start-up of one or more new public schools, including charter schools, that are independent of the assisting charter school and the assisting charter school's developers and that agree to be held to at least as high a level of accountability as the assisting charter school;

(b) Developing partnerships with other public schools, including charter schools, designed to improve student academic achievement in each of the schools participating in the partnership;

(c) Developing curriculum materials, assessments, and other materials that promote increased student achievement and are based on successful practices within the assisting charter school; and

(d) Conducting evaluations and developing materials that document the successful practices of the assisting charter school and that are designed to improve student performance in other schools. (20 U.S.C. 7221c(f)(6))

We reference additional regulations outlining funding restrictions in the *Applicable Regulations* section in this notice.

6. *Data Universal Numbering System Number, Taxpayer Identification Number, and Central Contractor Registry:* To do business with the Department of Education, (1) you must have a Data Universal Numbering System (DUNS) number and a Taxpayer Identification Number (TIN); (2) you must register both of those numbers with the Central Contractor Registry (CCR), the Government's primary registrant database; and (3) you must provide those same numbers on your application.

You can obtain a DUNS number from Dun and Bradstreet. A DUNS number can be created within one business day.

If you are a corporate entity, agency, institution, or organization, you can obtain a TIN from the Internal Revenue Service. If you are an individual, you can obtain a TIN from the Internal Revenue Service or the Social Security Administration. If you need a new TIN, please allow 2–5 weeks for your TIN to become active.

The CCR registration process may take five or more business days to complete. If you are currently registered with the CCR, you may not need to make any changes. However, please make certain that the TIN associated with your DUNS number is correct. Also note that you will need to update your CCR registration on an annual basis. This may take three or more business days to complete.

7. *Other Submission Requirements:* Applications for grants under this competition must be submitted electronically unless you qualify for an exception to this requirement in accordance with the instructions in this section.

a. *Electronic Submission of Applications.*

Applications for grants under the CSP, CFDA Numbers 84.282B and 84.282C, must be submitted electronically using e-Application, accessible through the Department's e-Grants Web site at: *http://e-grants.ed.gov.*

We will reject your application if you submit it in paper format unless, as described elsewhere in this section, you qualify for one of the exceptions to the electronic submission requirement and submit, no later than two weeks before the application deadline date, a written statement to the Department that you qualify for one of these exceptions. Further information regarding calculation of the date that is two weeks before the application deadline date is provided later in this section under *Exception to Electronic Submission Requirement.*

While completing your electronic application, you will be entering data online that will be saved into a database. You may not e-mail an electronic copy of a grant application to us.

Please note the following:

- You must complete the electronic submission of your grant application by 4:30:00 p.m., Washington, DC time, on the application deadline date. E-Application will not accept an application for this competition after 4:30:00 p.m., Washington, DC time, on the application deadline date. Therefore, we strongly recommend that you do not wait until the application deadline date to begin the application process.
- The hours of operation of the e-Grants Web site are 6:00 a.m. Monday until 7:00 p.m. Wednesday; and 6:00 a.m. Thursday until 8:00 p.m. Sunday, Washington, DC time. Please note that, because of maintenance, the system is unavailable between 8:00 p.m. on Sundays and 6:00 a.m. on Mondays, and between 7:00 p.m. on Wednesdays and 6:00 a.m. on Thursdays, Washington, DC time. Any modifications to these hours are posted on the e-Grants Web site.
- You will not receive additional point value because you submit your application in electronic format, nor will we penalize you if you qualify for an exception to the electronic submission requirement, as described elsewhere in this section, and submit your application in paper format.
- You must submit all documents electronically, including all information you typically provide on the following forms: The Application for Federal Assistance (SF 424), the Department of Education Supplemental Information for SF 424, Budget Information—Non-Construction Programs (ED 524), and all necessary assurances and certifications. You must attach any narrative sections of your application as files in a .DOC (document), .RTF (rich text), or .PDF

(Portable Document) format. If you upload a file type other than the three file types specified in this paragraph or submit a password protected file, we will not review that material.

• Your electronic application must comply with any page limit requirements described in this notice.

• Prior to submitting your electronic application, you may wish to print a copy of it for your records.

• After you electronically submit your application, you will receive an automatic acknowledgment that will include a PR/Award number (an identifying number unique to your application).

• Within three working days after submitting your electronic application, fax a signed copy of the SF 424 to the Application Control Center after following these steps:

(1) Print SF 424 from e-Application.

(2) The applicant's Authorizing Representative must sign this form.

(3) Place the PR/Award number in the upper right hand corner of the hard-copy signature page of the SF 424.

(4) Fax the signed SF 424 to the Application Control Center at (202) 245–6272.

• We may request that you provide us original signatures on other forms at a later date.

Application Deadline Date Extension in Case of e-Application Unavailability: If you are prevented from electronically submitting your application on the application deadline date because e-Application is unavailable, we will grant you an extension of one business day to enable you to transmit your application electronically, by mail, or by hand delivery. We will grant this extension if—

(1) You are a registered user of e-Application and you have initiated an electronic application for this competition; and

(2)(a) E–Application is unavailable for 60 minutes or more between the hours of 8:30 a.m. and 3:30 p.m., Washington, DC time, on the application deadline date; or

(b) E–Application is unavailable for any period of time between 3:30 p.m. and 4:30:00 p.m., Washington, DC time, on the application deadline date.

We must acknowledge and confirm these periods of unavailability before granting you an extension. To request this extension or to confirm our acknowledgment of any system unavailability, you may contact either (1) the person listed elsewhere in this notice under *For Further Information Contact* (see VII. Agency Contact) or (2) the e-Grants help desk at 1–888–336–8930. If e-Application is unavailable due to technical problems with the system and, therefore, the application deadline is extended, an e-mail will be sent to all registered users who have initiated an e-Application. Extensions referred to in this section apply only to the unavailability of e-Application.

Exception to Electronic Submission Requirement: You qualify for an exception to the electronic submission requirement, and may submit your application in paper format, if you are unable to submit an application through e-Application because—

• You do not have access to the Internet; or

• You do not have the capacity to upload large documents to e-Application;

and

• No later than two weeks before the application deadline date (14 calendar days or, if the fourteenth calendar day before the application deadline date falls on a Federal holiday, the next business day following the Federal holiday), you mail or fax a written statement to the Department, explaining which of the two grounds for an exception prevents you from using the Internet to submit your application. If you mail your written statement to the Department, it must be postmarked no later than two weeks before the application deadline date. If you fax your written statement to the Department, we must receive the faxed statement no later than two weeks before the application deadline date.

Address and mail or fax your statement to: Soumya Sathya, U.S. Department of Education, 400 Maryland Avenue, SW., room 4W236, Washington, DC 20202–5970. FAX: (202) 205–5630.

Your paper application must be submitted in accordance with the mail or hand delivery instructions described in this notice.

b. *Submission of Paper Applications by Mail.*

If you qualify for an exception to the electronic submission requirement, you may mail (through the U.S. Postal Service or a commercial carrier) your application to the Department. You must mail the original and two copies of your application, on or before the application deadline date, to the Department at the following address: U.S. Department of Education, Application Control Center, Attention: CFDA Number 84.282B or 84.282C, LBJ Basement Level 1, 400 Maryland Avenue, SW., Washington, DC 20202–4260.

You must show proof of mailing consisting of one of the following:

(1) A legibly dated U.S. Postal Service postmark.

(2) A legible mail receipt with the date of mailing stamped by the U.S. Postal Service.

(3) A dated shipping label, invoice, or receipt from a commercial carrier.

(4) Any other proof of mailing acceptable to the Secretary of the U.S. Department of Education.

If you mail your application through the U.S. Postal Service, we do not accept either of the following as proof of mailing:

(1) A private metered postmark.

(2) A mail receipt that is not dated by the U.S. Postal Service.

If your application is postmarked after the application deadline date, we will not consider your application.

Note: The U.S. Postal Service does not uniformly provide a dated postmark. Before relying on this method, you should check with your local post office.

c. *Submission of Paper Applications by Hand Delivery.*

If you qualify for an exception to the electronic submission requirement, you (or a courier service) may deliver your paper application to the Department by hand. You must deliver the original and two copies of your application, by hand, on or before the application deadline date, to the Department at the following address: U.S. Department of Education, Application Control Center, Attention: CFDA Number 84.282B or 84.282C, 550 12th Street, SW., Room 7041, Potomac Center Plaza, Washington, DC 20202–4260.

The Application Control Center accepts hand deliveries daily between 8:00 a.m. and 4:30:00 p.m., Washington, DC time, except Saturdays, Sundays, and Federal holidays.

Note for Mail or Hand Delivery of Paper Applications: If you mail or hand deliver your application to the Department—

(1) You must indicate on the envelope and—if not provided by the Department—in Item 11 of the SF 424 the CFDA number, including suffix letter, if any, of the competition under which you are submitting your application; and

(2) The Application Control Center will mail to you a notification of receipt of your grant application. If you do not receive this grant notification within 15 business days from the application deadline date, you should call the U.S. Department of Education Application Control Center at (202) 245–6288.

V. Application Review Information

Selection Criteria: Non-SEA eligible applicants applying for CSP grant funds must address both the statutory application requirements and the selection criteria described in the

following paragraphs. Each applicant applying for CSP grant funds may choose to respond to the application requirements in the context of its responses to the selection criteria.

The statutory application requirements for all applicants submitting under CFDA numbers 84.282B and 84.282C are listed in paragraph (a) in this section.

The selection criteria for non-SEA applicants for Planning, Program Design, and Implementation Grants (CFDA number 84.282B) are listed in paragraph (b) in this section.

The selection criteria for non-SEA applicants for Dissemination Grants (CFDA number 84.282C) are listed in paragraph (c) in this section.

(a) *Application Requirements (CFDA numbers 84.282B and 84.282C)*

(i) Describe the educational program to be implemented by the proposed charter school, including how the program will enable all students to meet challenging State student academic achievement standards, the grade levels or ages of students to be served, and the curriculum and instructional practices to be used;

(ii) Describe how the charter school will be managed;

(iii) Describe the objectives of the charter school and the methods by which the charter school will determine its progress toward achieving those objectives;

(iv) Describe the administrative relationship between the charter school and the authorized public chartering agency;

(v) Describe how parents and other members of the community will be involved in the planning, program design, and implementation of the charter school;

(vi) Describe how the authorized public chartering agency will provide for continued operation of the charter school once the Federal grant has expired, if that agency determines that the charter school has met its objectives as described in paragraph (iii);

(vii) If the charter school desires the Secretary to consider waivers under the authority of the CSP, include a request and justification for waivers of any Federal statutory or regulatory provisions that the applicant believes are necessary for the successful operation of the charter school and a description of any State or local rules, generally applicable to public schools, that will be waived for, or otherwise not apply to, the school;

(viii) Describe how the grant funds will be used, including a description of how these funds will be used in conjunction with other Federal programs administered by the Secretary;

(ix) Describe how students in the community will be informed about the charter school and be given an equal opportunity to attend the charter school;

(x) Describe how a charter school that is considered an LEA under State law, or an LEA in which a charter school is located, will comply with sections 613(a)(5) and 613(e)(1)(B) of the Individuals with Disabilities Education Act; and

(xi) If the eligible applicant desires to use grant funds for dissemination activities under section 5202(c)(2)(C) of the ESEA, describe those activities and how those activities will involve charter schools and other public schools, LEAs, developers, and potential developers.

(b) *Selection Criteria (CFDA number 84.282B).* The following selection criteria are from section 5204 of the ESEA and 34 CFR 75.210 of EDGAR.

The maximum possible score for all the criteria in this section is 100 points.

The maximum possible score for each criterion is indicated in parentheses following the criterion.

In evaluating an application from a non-SEA eligible applicant for Planning, Program Design, and Implementation, the Secretary considers the following criteria:

(i) The quality of the proposed curriculum and instructional practices (25 points).

Note: The Secretary encourages the applicant to describe the educational program to be implemented by the proposed charter school, including how the program will enable all students to meet challenging State student academic achievement standards, the grade levels or ages of students to be served, and the curriculum and instructional practices to be used.

(ii) The degree of flexibility afforded by the SEA and, if applicable, the LEA to the charter school (5 points).

Note: The Secretary encourages the applicant to include a description of how the State's law establishes an administrative relationship between the charter school and the authorized public chartering agency and exempts the charter school from significant State or local rules that inhibit the flexible operation and management of public schools.

The Secretary also encourages the applicant to include a description of the degree of autonomy the charter school will have over such matters as the charter school's budget, expenditures, daily operation, and personnel in accordance with its State's charter school law.

(iii) The extent of community support for the application (10 points).

Note: The Secretary encourages the applicant to describe how parents and other members of the community will be informed about the charter school, and how students will be given an equal opportunity to attend the charter school.

(iv) The quality of the strategy for assessing achievement of the charter school's objectives (10 points).

(v) The existence of a charter or performance contract between the charter school and its authorized public chartering agency and the extent to which the charter or performance contract describes how student performance will be measured in the charter school pursuant to State assessments that are required of other schools and pursuant to any other assessments mutually agreeable to the authorized public chartering agency and the charter school (5 points).

(vi) The extent to which the proposed project encourages parental involvement (5 points).

Note: The Secretary encourages the applicant to describe how parents and other members of the community will be involved in the planning, program design, and implementation of the charter school.

(vii) The quality of the personnel who will carry out the proposed project. In determining the quality of project personnel, the Secretary considers the qualifications, including relevant training and experience, of the project director; and the extent to which the applicant encourages applications for employment from persons who are members of groups that have traditionally been underrepresented based on race, color, national origin, gender, age, or disability (25 points).

(viii) The extent to which the proposed project will focus on serving or otherwise addressing the needs of disadvantaged individuals (15 points).

(c) *Selection Criteria (CFDA number 84.282C).* The following selection criteria are from section 5204 of the ESEA and 34 CFR 75.210 of EDGAR.

The maximum possible score for all the criteria in this section is 100 points.

The maximum possible score for each criterion is indicated in parentheses following the criterion.

In evaluating an application from a non-SEA eligible applicant for a dissemination grant, the Secretary considers the following criteria:

(i) The quality of the proposed dissemination activities and the likelihood that those activities will improve student achievement (20 points).

Note: The Secretary encourages the applicant to describe the objectives for the proposed dissemination activities and the methods by which the charter school will determine its progress toward achieving those objectives.

(ii) The existence of a charter or performance contract between the charter school and its authorized public chartering agency and the extent to which the charter or performance contract describes how student performance will be measured in the charter school pursuant to State assessments that are required of other schools and pursuant to any other assessments mutually agreeable to the authorized public chartering agency and the charter school (5 points).

(iii) The extent to which the school has demonstrated overall success, including—

(1) Substantial progress in improving student achievement (15 points);

(2) High levels of parent satisfaction (5 points); and

(3) The management and leadership necessary to overcome initial start-up problems and establish a thriving, financially viable charter school (10 points).

(iv) The extent to which the results of the proposed project will be disseminated in a manner that will enable others to use the information or strategies (15 points).

(v) The quality of the personnel who will carry out the proposed project. In determining the quality of project personnel, the Secretary considers the qualifications, including relevant training and experience, of the project director and the extent to which the applicant encourages applications for employment from persons who are members of groups that have traditionally been underrepresented based on race, color, national origin, gender, age, or disability (20 points).

(vi) The quality of the management plan for the proposed project. In determining the quality of the management plan for the proposed project, the Secretary considers the adequacy of the management plan to achieve the objectives of the proposed project on time and within budget, including clearly defined responsibilities, timelines, and milestones for accomplishing project tasks (10 points).

VI. Award Administration Information

1. *Award Notices:* If your application is successful, we notify your U.S. Representative and U.S. Senators and send you a Grant Award Notification (GAN). We may notify you informally, also.

If your application is not evaluated or not selected for funding, we notify you.

2. *Administrative and National Policy Requirements:* We identify administrative and national policy requirements in the application package and reference these and other requirements in the *Applicable Regulations* section in this notice.

We reference the regulations outlining the terms and conditions of an award in the *Applicable Regulations* section in this notice and include these and other specific conditions in the GAN. The GAN also incorporates your approved application as part of your binding commitments under the grant.

3. *Reporting:* At the end of your project period, you must submit a final performance report, including financial information, as directed by the Secretary. If you receive a multi-year award, you must submit an annual performance report that provides the most current performance and financial expenditure information as directed by the Secretary under 34 CFR 75.118. The Secretary may also require more frequent performance reports under 34 CFR 75.720(c). For specific requirements on reporting, please go to *http://www.ed.gov/fund/grant/apply/appforms/appforms.html.*

4. *Performance Measures:* The goal of the CSP is to support the creation and development of a large number of high-quality charter schools that are free from State or local rules that inhibit flexible operation, are held accountable for enabling students to reach challenging State performance standards, and are open to all students. The Secretary has two performance indicators to measure progress toward this goal: (1) The number of charter schools in operation around the Nation, and (2) the percentage of charter school students who are achieving at or above the proficient level on State examinations in mathematics and reading. Additionally, the Secretary has established the following measure to examine the efficiency of the CSP: Federal cost per student in implementing a successful school (defined as a school in operation for three or more consecutive years).

All grantees will be expected to submit an annual performance report documenting their contribution in assisting the Department in meeting these performance measures.

VII. Agency Contact

For Further Information Contact: Soumya Sathya, U.S. Department of Education, 400 Maryland Avenue, SW., room 4W236, Washington, DC 20202–5970. Telephone: (202) 260–0819 or by e-mail: *soumya.sathya@ed.gov.*

If you use a TDD, call the FRS, toll free, at 1–800–877–8339.

VIII. Other Information

Accessible Format: Individuals with disabilities can obtain this document and a copy of the application package in an accessible format (e.g., Braille, large print, audiotape, or computer diskette) on request to the program contact person listed under *For Further Information Contact* in section VII of this notice.

Electronic Access to This Document: You can view this document, as well as all other documents of this Department published in the **Federal Register**, in text or Adobe Portable Document Format (PDF) on the Internet at the following site: *http://www.ed.gov/news/fedregister.*

To use PDF you must have Adobe Acrobat Reader, which is available free at this site. If you have questions about using PDF, call the U.S. Government Printing Office (GPO), toll free, at 1–888–293–6498; or in the Washington, DC, area at (202) 512–1530.

Note: The official version of this document is the document published in the **Federal Register**. Free Internet access to the official edition of the **Federal Register** and the Code of Federal Regulations is available on GPO Access at: *http://www.gpoaccess.gov/nara/index.html.*

Dated: July 21, 2010.

James H. Shelton, III,

Assistant Deputy Secretary for Innovation and Improvement.

[FR Doc. 2010–18254 Filed 7–23–10; 8:45 am]

BILLING CODE 4000–01–P

DEPARTMENT OF EDUCATION

National Assessment Governing Board; Meeting

AGENCY: National Assessment Governing Board, Department of Education.

ACTION: Notice of open meeting and partially closed sessions.

SUMMARY: The notice sets forth the schedule and proposed agenda of a forthcoming meeting of the National Assessment Governing Board. This notice also describes the functions of the Board. Notice of this meeting is required under Section 10(a)(2) of the Federal Advisory Committee Act. This document is intended to notify members of the general public of their opportunity to attend. Individuals who will need special accommodations in order to attend the meeting (*e.g:* interpreting services, assistive listening devices, materials in alternative format) should notify Munira Mwalimu at 202–357–6938 or at *Munira.Mwalimu@ed.gov* no later than July 27, 2010. We will attempt to meet requests after this date, but cannot guarantee availability of the requested

accommodation. The meeting site is accessible to individuals with disabilities.

DATES: August 5–7, 2010.

Times

August 5: Committee Meetings

Assessment Development Committee: Closed Session—8:30 a.m. to 3:30 p.m.

Executive Committee: Open Session—4:30 p.m. to 5:15 p.m.; Closed Session—5:15 p.m. to 6:00 p.m.

August 6

Full Board: Open Session—8:30 a.m. to 9:45 a.m.; Closed Session—12:45 p.m. to 1:45 p.m.; Open Session—1:45 p.m. to 5:00 p.m.

Committee Meetings

Assessment Development Committee: Open Session—10:00 a.m. to 11:30 a.m.; Closed Session—11:30 a.m. to 12:30 p.m.;

Committee on Standards, Design and Methodology: Open Session—10:00 a.m. to 11:30 a.m.; Closed Session 11:30 a.m. to 12:20 p.m.

Reporting and Dissemination Committee: Open Session—10:00 a.m. to 12:30 p.m.

August 7

Nominations Committee: Closed Session—7:45 a.m. to 8:15 a.m.

Full Board: Open Session—8:30 a.m. to 12:00 p.m.

Location: Ritz-Carlton Washington DC, 1150 22nd Street, NW., Washington, DC 20037.

FOR FURTHER INFORMATION CONTACT: Munira Mwalimu, Operations Officer, National Assessment Governing Board, 800 North Capitol Street, NW., Suite 825, Washington, DC 20002–4233, Telephone: (202) 357–6938.

SUPPLEMENTARY INFORMATION: The National Assessment Governing Board is established under section 412 of the National Education Statistics Act of 1994, as amended.

The Board is established to formulate policy guidelines for the National Assessment of Educational Progress (NAEP). The Board's responsibilities include the following: Selecting subject areas to be assessed, developing assessment specifications and frameworks, developing appropriate student achievement levels for each grade and subject tested, developing standards and procedures for interstate and national comparisons, developing guidelines for reporting and disseminating results, and releasing initial NAEP results to the public.

On August 5, from 8:30 a.m. to 3:30 p.m., the Assessment Development Committee will meet in closed session to review secure NAEP items for grade 12 economics, grades 4 and 8 reading, and grades 4 and 8 writing. The writing items are for the 2011 operational assessment; the reading items are for the 2013 pilot test; and the economics items are for the 2011 pilot test. The Board will be provided with embargoed test items for review that cannot be discussed in an open meeting. Premature disclosure of data would significantly impede implementation of the NAEP assessments, and is therefore protected by exemption 9(B) of section 552b(c) of Title 5 U.S.C.

On August 5, from 4:30 p.m. to 5:15 p.m., the Executive Committee will meet in open session and thereafter in closed session from 5:15 p.m. to 6:00 p.m. During the closed session on August 5, the Executive Committee will receive a briefing from the National Center for Education Statistics (NCES) on options for NAEP contracts covering assessment years beyond 2011 and discuss budget implications for the NAEP assessment schedule and for international linking studies. The discussion of contract options and costs will address the Congressionally mandated goals and Board policies on NAEP assessments. This part of the meeting must be conducted in closed session because public discussion of this information would disclose independent government cost estimates and contracting options, adversely impacting the confidentiality of the contracting process. Public disclosure of information discussed would significantly impede implementation of the NAEP contracts, and is therefore protected by exemption 9(B) of section 552b(c) of Title 5 U.S.C.

On August 6, the full Board will meet in open session from 8:30 a.m. to 9:45 a.m. The Board will review and approve the meeting agenda and meeting minutes from the May 2010 Board meeting. This session will be followed by remarks from outgoing Board members. The Executive Director of the Governing Board will then provide a report to the Board, followed by updates to the Board from the Director of the Institute of Education Sciences and the Deputy Commissioner of the National Center for Education Statistics. The Board will recess for Committee meetings on August 6 from 10:00 a.m. to 12:30 p. m.

The Reporting and Dissemination Committee will meet in open session on August 6 from 10:00 a.m. to 12:30 p.m.

The Assessment Development Committee will meet in open session from 10:00 a.m. to 11:30 a.m. and thereafter in closed session from 11:30 a.m. to 12:30 p.m. to receive briefings on two NAEP assessment areas. The first briefing will be on response rates to 2009 NAEP science items, which will include illustrative secure items at grades 4, 8, and 12. These data and items have not yet been released to the public, since the 2009 NAEP Science Report Card is scheduled for release in the fall of 2010. The second briefing will be on preliminary student performance data from the 2010 NAEP computer-based writing assessment pilot test at grades 8 and 12. This secure data cannot be discussed in an open meeting prior to official release. Premature disclosure of data would significantly impede implementation of the NAEP assessment, and is therefore protected by exemption 9(B) of section 552b(c) of Title 5 U.S.C.

The Committee on Standards, Design and Methodology (COSDAM) will meet in open session from 10:00 a.m. to 11:25 a.m. and thereafter in closed session from 11:30 a.m. to 12:20 p.m. During the closed session, Committee members will review and discuss 2010 Grade 12 NAEP participation rates and implications. COSDAM members will then review and discuss data on science achievement levels for 2009 at grades 4, 8, and 12, to include achievement levels descriptions, achievement levels cutscores, and exemplar items. The secure data on participation rates and achievement levels cannot be discussed in an open meeting prior to their official release. Premature disclosure of data would significantly impede implementation of the NAEP assessment, and is therefore protected by exemption 9(B) of section 552b(c) of Title 5 U.S.C. Following this closed session COSDAM will meet in open session from 12:20 p.m. to 12:30 p.m. to take a formal vote on the science achievement levels for 2009 at grades 4, 8, and 12.

On August 6, from 12:45 p.m. to 1:45 p.m. the full Board will meet in closed session to receive a briefing on the 2009 National Assessment of Educational Progress (NAEP) Science Achievement Levels at grades 4, 8, and 12. The Board will be provided with embargoed results that cannot be discussed in an open meeting prior to their official release. Premature disclosure of data would significantly impede implementation of the NAEP assessment, and is therefore protected by exemption 9(B) of section 552b(c) of Title 5 U.S.C.

From 1:45 p.m. to 2:30 p.m. the Board will meet in open session to discuss Governance Issues for the Common Core Standards and Assessments. Following this session, from 2:45 p.m. to 4:00 p.m., the Board will receive updates from the

Business Policy Task Force and the Council of Chief State School Officers Task Force. From 4:00 p.m. to 5:00 p.m. the Board will receive a briefing on NAEP and International Comparisons. The August 6, 2010 Board meeting is scheduled to conclude at 5:00 p.m.

On August 7, the Nominations Committee will meet in closed session from 7:45 a.m. to 8:15 a.m. to review and discuss specific names for Board vacancies, and their qualifications for Board membership for Board terms beginning October 1, 2010. These discussions pertain solely to internal personnel rules and practices of an agency and will disclose information of a personal nature where disclosure would constitute an unwarranted invasion of personal privacy. As such, the discussions are protected by exemptions 2 and 6 of section 552b(c) of Title 5 U.S.C.

The full Board will meet in open session on August 7 from 8:30 a.m. to 9:30 a.m. to receive a status report on implementation of the Board policy on Testing and Reporting on Students with Disabilities and English Language Learners. Thereafter, the Board will receive Committee reports and take action on Committee recommendations. The August 7, 2010 session of the Board meeting is scheduled to adjourn at 12 noon.

Detailed minutes of the meeting, including summaries of the activities of the closed sessions and related matters that are informative to the public and consistent with the policy of section 5 U.S.C. 552b(c) will be available to the public within 14 days of the meeting. Records are kept of all Board proceedings and are available for public inspection at the U.S. Department of Education, National Assessment Governing Board, Suite #825, 800 North Capitol Street, NW., Washington, DC from 9:00 a.m. to 5:00 p.m. Eastern Time, Monday through Friday.

Electronic Access to This Document: You may view this document, as well as all other documents of this Department published in the **Federal Register**, in text or Adobe Portable Document Format (PDF) on the Internet at the following site: *http://www.ed.gov/news/fedregister/index.html*. To use PDF you must have Adobe Acrobat Reader, which is available free at this site. If you have questions about using PDF, call the U.S. Government Printing Office (GPO), toll free at 1–866–512–1800; or in the Washington, DC area at (202) 512–0000.

Note: The official version of this document is the document published in the **Federal Register**. Free Internet access to the official edition of the **Federal Register** and the Code of Federal Regulations is available on GPO Access at: *http://www.gpoaccess.gov/nara/index.html.*

Dated: July 21, 2010.

Cornelia S. Orr,

Executive Director, National Assessment Governing Board, U. S. Department of Education.

[FR Doc. 2010–18204 Filed 7–23–10; 8:45 am]

BILLING CODE 4000–01–P

DEPARTMENT OF ENERGY

Environmental Management Site-Specific Advisory Board, Northern New Mexico

AGENCY: Department of Energy.

ACTION: Notice of open meeting.

SUMMARY: This notice announces a combined meeting of the Environmental Monitoring, Surveillance and Remediation Committee and Waste Management Committee of the Environmental Management Site-Specific Advisory Board (EM SSAB), Northern New Mexico (known locally as the Northern New Mexico Citizens' Advisory Board (NNMCAB). The Federal Advisory Committee Act (Pub. L. 92–463, 86 Stat. 770) requires that public notice of this meeting be announced in the **Federal Register**.

DATES: Wednesday, August 11, 2010, 2 p.m.–4 p.m.

ADDRESSES: Los Alamos National Laboratory Foundation, Conference Room, 1112 Plaza del Norte, Espanola, New Mexico 87532.

FOR FURTHER INFORMATION CONTACT: Menice Santistevan, Northern New Mexico Citizens' Advisory Board (NNMCAB), 1660 Old Pecos Trail, Suite B, Santa Fe, NM 87505. Phone (505) 995–0393; Fax (505) 989–1752 or E-mail: *msantistevan@doeal.gov*.

SUPPLEMENTARY INFORMATION:

Purpose of the Board: The purpose of the Board is to make recommendations to DOE–EM and site management in the areas of environmental restoration, waste management, and related activities.

Purpose of the Environmental Monitoring, Surveillance and Remediation Committee (EMS&R): The EMS&R Committee provides a citizens' perspective to NNMCAB on current and future environmental remediation activities resulting from historical Los Alamos National Laboratory operations and, in particular, issues pertaining to groundwater, surface water and work required under the New Mexico Environment Department Order on Consent. The EMS&R Committee will keep abreast of DOE–EM and site programs and plans. The committee will work with the NNMCAB to provide assistance in determining priorities and the best use of limited funds and time. Formal recommendations will be proposed when needed and, after consideration and approval by the full NNMCAB, may be sent to DOE–EM for action.

Purpose of the Waste Management Committee: The Waste Management Committee reviews policies, practices and procedures, existing and proposed, so as to provide recommendations, advice, suggestions and opinions to the NNMCAB regarding waste management operations at the Los Alamos site.

Tentative Agenda:

- Welcome and Introductions
- Administrative Issues
  - Approval of Meeting Agenda
  - Approval of July 14, 2010, Combined Committee Meeting Minutes
  - Items from Co-Deputy Designated Federal Officers
- Public Comments
- New Business
  - Open Discussion
  - Discussion of Draft NNMCAB Recommendations
- Old Business—Review Final Draft Fiscal Year 2011 Committee Work Plans
- Presentation by Los Alamos National Security Subject Matter Expert
- Discussion of Next Meeting Date and Time
- Wrap-up Discussion and Adjournment

Public Participation: The NNMCAB's EMS&R and Waste Management Committees welcome the attendance of the public at their combined committee meeting and will make every effort to accommodate persons with physical disabilities or special needs. If you require special accommodations due to a disability, please contact Menice Santistevan at least seven days in advance of the meeting at the telephone number listed above. Written statements may be filed with the Committees either before or after the meeting. Individuals who wish to make oral statements pertaining to agenda items should contact Menice Santistevan at the address or telephone number listed above. Requests must be received five days prior to the meeting and reasonable provision will be made to include the presentation in the agenda. The Deputy Designated Federal Officer is empowered to conduct the meeting in a fashion that will facilitate the orderly conduct of business. Individuals wishing to make public comments will be provided a maximum of five minutes to present their comments.

Minutes: Minutes will be available by writing or calling Menice Santistevan at the address or phone number listed above. Minutes and other Board documents are on the Internet at: *http://www.nnmcab.org/.*

Issued at Washington, DC, on July 19, 2010.

Rachel Samuel,

Deputy Committee Management Officer.

[FR Doc. 2010–18128 Filed 7–23–10; 8:45 am]

BILLING CODE 6450–01–P

DEPARTMENT OF ENERGY

Environmental Management Site-Specific Advisory Board, Oak Ridge Reservation

AGENCY: Department of Energy.

ACTION: Notice of open meeting.

SUMMARY: This notice announces a meeting of the Environmental Management Site-Specific Advisory Board (EM SSAB), Oak Ridge Reservation. The Federal Advisory Committee Act (Pub. L. No. 92–463, 86 Stat. 770) requires that public notice of this meeting be announced in the **Federal Register**.

DATES: Saturday, August 21, 2010, 8 a.m.–4 p.m.

ADDRESSES: Dancing Bear Lodge, 144 Apple Valley Way, Townsend, Tennessee.

FOR FURTHER INFORMATION CONTACT: Patricia J. Halsey, Federal Coordinator, Department of Energy Oak Ridge Operations Office, P.O. Box 2001, EM–90, Oak Ridge, TN 37831. Phone (865) 576–4025; Fax (865) 576–2347 or e-mail: *halseypj@oro.doe.gov* or check the Web site at *http://www.oakridge.doe.gov/em/ssab.*

SUPPLEMENTARY INFORMATION:

Purpose of the Board: The purpose of the Board is to make recommendations to DOE–EM and site management in the areas of environmental restoration, waste management, and related activities.

Tentative Agenda: The board will review their Fiscal Year (FY) 2010 work plans and develop work plans for FY 2011.

Public Participation: The EM SSAB, Oak Ridge, welcomes the attendance of the public at its advisory committee meetings and will make every effort to accommodate persons with physical disabilities or special needs. If you require special accommodations due to a disability, please contact Patricia J. Halsey at least seven days in advance of the meeting at the phone number listed above. Written statements may be filed with the Board either before or after the meeting. Individuals who wish to make oral statements pertaining to the agenda item should contact Patricia J. Halsey at the address or telephone number listed above. Requests must be received five days prior to the meeting and reasonable provision will be made to include the presentation in the agenda. The Deputy Designated Federal Officer is empowered to conduct the meeting in a fashion that will facilitate the orderly conduct of business. Individuals wishing to make public comments will be provided a maximum of five minutes to present their comments.

Minutes: Minutes will be available by writing or calling Patricia J. Halsey at the address and phone number listed above. Minutes will also be available at the following Web site: *http://www.oakridge.doe.gov/em/ssab/minutes.htm.*

Issued at Washington, DC on July 19, 2010.

Rachel Samuel,

Deputy Committee Management Officer.

[FR Doc. 2010–18129 Filed 7–23–10; 8:45 am]

BILLING CODE 6450–01–P

DEPARTMENT OF ENERGY

Advanced Scientific Computing Advisory Committee; Meeting

AGENCY: Office of Science, DOE.

ACTION: Notice of open meeting.

SUMMARY: This notice announces a meeting of the Advanced Scientific Computing Advisory Committee (ASCAC). Federal Advisory Committee Act (Pub. L. 92–463, 86 Stat. 770) requires that public notice of these meetings be announced in the **Federal Register**.

DATES: Tuesday, August 24, 2010, 9 a.m. to 5 p.m.; Wednesday, August 25, 2010, 9 a.m. to 12 p.m.

ADDRESSES: American Geophysical Union, (AGU), 2000 Florida Avenue, NW., Washington, DC 20009–1277.

FOR FURTHER INFORMATION CONTACT: Melea Baker, Office of Advanced Scientific Computing Research; SC–21/Germantown Building; U. S. Department of Energy; 1000 Independence Avenue, SW., Washington, DC 20585–1290; Telephone (301) 903–7486, (E-mail: *Melea.Baker@science.doe.gov*).

SUPPLEMENTARY INFORMATION:

Purpose of the Meeting: The purpose of this meeting is to provide advice and guidance with respect to the advanced scientific computing research program.

Tentative Agenda: Agenda will include discussions of the following:

Tuesday, August 24, 2010

ASCR program update.
ARRA update.
ASCAC Exascale Subcommittee report.
Public Comment.

Wednesday, August 25, 2010

ASCAC COV report.
Update on GTL Knowledge Base.
Public Comment.

Public Participation: The meeting is open to the public. If you would like to file a written statement with the Committee, you may do so either before or after the meeting. If you would like to make oral statements regarding any of the items on the agenda, you should contact Melea Baker via FAX at 301–903–4846 or via e-mail (*Melea.Baker@science.doe.gov*). You must make your request for an oral statement at least 5 business days prior to the meeting. Reasonable provision will be made to include the scheduled oral statements on the agenda. The Chairperson of the Committee will conduct the meeting to facilitate the orderly conduct of business. Public comment will follow the 10-minute rule.

Minutes: The minutes of this meeting will be available for public review and copying within 30 days at the Freedom of Information Public Reading Room; 1G–033, Forrestal Building; 1000 Independence Avenue, SW., Washington, DC 20585; between 9 a.m. and 4 p.m., Monday through Friday, except holidays.

Issued in Washington, DC on July 21, 2010.

Rachel Samuel,

Deputy Committee Management Officer.

[FR Doc. 2010–18207 Filed 7–23–10; 8:45 am]

BILLING CODE 6450–01–P

DEPARTMENT OF ENERGY

Blue Ribbon Commission on America's Nuclear Future, Transportation and Storage Subcommittee

AGENCY: Department of Energy, Office of Nuclear Energy.

ACTION: Notice of open meeting.

SUMMARY: This notice announces an open meeting of the Transportation and Storage (T&S) Subcommittee. The T&S Subcommittee is a subcommittee of the Blue Ribbon Commission on America's Nuclear Future (the Commission). The establishment of subcommittees is authorized in the Commission's charter. The Commission was organized pursuant to the Federal Advisory Committee Act (Pub. L. 92–463, 86 Stat.

770) (the Act). This notice is provided consistent with the Act.

DATES: Tuesday, August 10, 2010, 9 a.m.–12 p.m.

ADDRESSES: Chewonki Foundation, 485 Chewonki Neck Road, Wiscasset, Maine 04578–4822. Phone: 207–882–7323.

FOR FURTHER INFORMATION CONTACT: Timothy A. Frazier, Designated Federal Officer, U.S. Department of Energy, 1000 Independence Avenue, SW., Washington, DC 20585; telephone (202) 586–4243 or facsimile (202) 586–0544; e-mail *CommissionDFO@nuclear.energy.gov*. Additional information may also be available at *http:*//www.brc.gov.

SUPPLEMENTARY INFORMATION:

Background: The President directed that the Blue Ribbon Commission on America's Nuclear Future (the Commission) be established to conduct a comprehensive review of policies for managing the back end of the nuclear fuel cycle. The Commission will provide advice and make recommendations on issues including alternatives for the storage, processing, and disposal of civilian and defense spent nuclear fuel and nuclear waste.

The Co-chairs of the Commission requested the formation of the T&S Subcommittee to answer the question: "[s]hould the US change the way in which it is storing used nuclear fuel and high level waste while one or more final disposal locations are established?"

Purpose of the Meeting: The session will provide the T&S Subcommittee with a range of local and regional perspectives from elected officials, utility representatives, and State and regional public safety officials. The session will include a Subcommittee tour of the Maine Yankee Independent Spent Fuel Storage Installation, to provide an opportunity to see first-hand a shutdown reactor facility currently storing spent nuclear fuel pending final disposal.

Tentative Agenda: The public meeting will begin at approximately 9 a.m. at the Chewonki Foundation. The Subcommittee will then hear presentations from public officials and stakeholder groups, ask questions of presenters, and conclude with a public comment session. The public session is expected to conclude by 12:30 p.m.

Public Participation: Subcommittee meetings are not subject to the requirements of the Act; however, the Commission has elected to open the presentation sessions of the meeting to the public. The meeting is open to the public. Individuals and representatives of organizations who would like to offer comments and suggestions may do so at the end of the public session on Tuesday, August 10, 2010. Approximately 30 minutes will be reserved for public comments from 11:40 a.m. to 12:20 p.m. Time allotted per speaker will depend on the number who wish to speak but will not exceed 5 minutes. The Designated Federal Officer is empowered to conduct the meeting in a fashion that will facilitate the orderly conduct of business. Those wishing to speak should register to do so beginning at 9 a.m. on August 10, 2010 at the Chewonki Foundation.

Those not able to attend the meeting or have insufficient time to address the subcommittee are invited to send a written statement to Timothy A. Frazier, U.S. Department of Energy, 1000 Independence Avenue, SW., Washington DC 20585, e-mail to *CommissionDFO@nuclear.energy.gov*, or post comments on the Commission Web site at *http://www.brc.gov*.

Additionally, the meeting will be available via live video webcast. The link will be available at *http://www.brc.gov*.

Minutes: The minutes of the meeting will be available at *http://www.brc.gov* or by contacting Mr. Frazier. He may be reached at the postal address or e-mail address above.

Issued in Washington, DC, on July 21, 2010.

Rachel Samuel,

Deputy Committee Management Officer.

[FR Doc. 2010–18208 Filed 7–23–10; 8:45 am]

BILLING CODE 6450–01–P

DEPARTMENT OF ENERGY

Western Area Power Administration

Parker-Davis Project; Transmission Capacity for Renewable Energy Between Electrical District No. 5 Substation and the Palo Verde Hub

AGENCY: Western Area Power Administration, DOE.

ACTION: Request for Statements of Interest (SOI).

SUMMARY: The Western Area Power Administration (Western), a Federal power marketing agency of the United States Department of Energy (DOE), is requesting SOIs from entities that are interested in purchasing transmission service. Western is evaluating a proposal which would create a new transmission path on the Parker-Davis Project (P–DP) that could facilitate the transmission of renewable generation, and is seeking interest from any entity or entities desiring to purchase Long-Term Firm Transmission Service to deliver such renewable generation over the P–DP transmission system.

DATES: To be assured consideration, all responses should be received by Western on or before 4 p.m. m.s.t. on August 25, 2010.

ADDRESSES: Send written responses to: Darrick Moe, Regional Manager, Desert Southwest Customer Service Region, Western Area Power Administration, P.O. Box 6457, Phoenix, AZ 85005–6457. Responses may be delivered by certified mail, commercial mail, e-mail *DSWFPP@wapa.gov,* or fax 602–605–2490.

FOR FURTHER INFORMATION CONTACT: For further information please contact Mr. Todd Rhoades, Project Manager, Desert Southwest Regional Office, Western Area Power Administration, P.O. Box 6457, Phoenix, AZ 85005–6457, (602) 605–2613, e-mail *DSWFPP@wapa.gov*. This notice is also available on Western's Web site at *http://www.wapa.gov/fedreg/fedreg10.htm.*

SUPPLEMENTARY INFORMATION: Western markets and transmits wholesale hydroelectric power, generated at Federal dams across the western United States. Western's transmission system was developed to deliver this hydropower to its customers. The P–DP includes Davis Dam and Powerplant, Parker Dam and Powerplant and approximately 1,700 miles of high-voltage transmission lines and the associated substations and switchyards. The P–DP serves as a major transmission system for delivery of power over long distances in Arizona, with facilities extending into the southern parts of California and Nevada. Palo Verde is a major trading hub for wholesale power, offering access to multiple markets in the western United States.

In this notice, Western solicits SOIs to allow Western to determine the level of interest for long-term firm transmission service on the P–DP for the purpose of transmitting renewable energy. Specifically, Western is soliciting interest from entities looking to transfer renewable energy from the area south of Phoenix, Arizona to the Palo Verde market hub. Points of receipt for transmission service could include any of Western's substations in the vicinity of Electrical District No. 5 (ED–5) Substation near Eloy, Arizona; Casa Grande Substation near Casa Grande, Arizona; or Test Track Substation near Maricopa, Arizona. An expression of interest in purchasing P–DP long-term firm transmission service made by submitting a SOI is not binding or promissory. SOIs submitted with

respect to this notice should include the following information:

1. Name and general description of the entity submitting the SOI;

2. Name, mailing address, telephone number, facsimile number, and e-mail address of that entity's primary contact;

3. Description of the renewable energy resources the proposed transmission path would serve, including type(s) of renewable resources, general location of load or markets, and any other information that would be useful;

4. The amount of long-term firm transmission service and the interconnection or receipt points on the proposed path.

Environmental Compliance

In compliance with the National Environmental Policy Act of 1969 (NEPA) (42 U.S.C. 4321, *et seq.*), the Council on Environmental Quality Regulations for implementing NEPA (40 CFR parts 1500–1508) and the DOE NEPA Implementing Procedures and Guidelines (10 CFR part 1021), Western has determined that this action is categorically excluded from further NEPA analysis. Future actions under this authority will undergo appropriate NEPA analysis.

Dated: July 16, 2010.

Anthony H. Montoya,

Chief Operating Officer.

[FR Doc. 2010–18206 Filed 7–23–10; 8:45 am]

BILLING CODE 6450–01–P

ENVIRONMENTAL PROTECTION AGENCY

[EPA–HQ–OAR–2010–0469; FRL–9179–7

Agency Information Collection Activities: Proposed Collection; Comment Request; Information Request for National Emission Standards for Hazardous Air Pollutants (NESHAP) for Secondary Aluminum Production Residual Risk and Technology Review (RTR); EPA ICR No. 2400.01

AGENCY: Environmental Protection Agency (EPA).

ACTION: Notice.

SUMMARY: In compliance with the Paperwork Reduction Act (PRA) (44 U.S.C. 3501 *et seq.*), this action announces that EPA is planning to submit a request for a new Information Collection Request (ICR) to the Office of Management and Budget (OMB). Before submitting the ICR to OMB for review and approval, EPA is soliciting comments on the proposed information collection as described below.

DATES: Comments must be submitted on or before September 24, 2010.

ADDRESSES: Submit your comments, identified by Docket ID No. EPA–HQ–OAR–2010–0469, by one of the following methods:

- *www.regulations.gov*: Follow the on-line instructions for submitting comments.
- E-*mail: a-and-r-docket@epa.gov.*
- *Fax:* (202) 566–1741.
- *Mail:* Air and Radiation Docket and Information Center, Environmental Protection Agency, Mailcode: 2822T, 1200 Pennsylvania Ave., NW., Washington, DC 20460.
- *Hand Delivery:* Air and Radiation Docket and Information Center, U.S. EPA, Room 3334, EPA West Building, 1301 Constitution Avenue, NW., Washington, DC. Such deliveries are only accepted during the Docket's normal hours of operation, and special arrangements should be made for deliveries of boxed information.

Instructions: Direct your comments to Docket ID No. EPA–HQ–OAR–2010–0469. EPA's policy is that all comments received will be included in the public docket without change and may be made available online at *www.regulations.gov,* including any personal information provided, unless the comment includes information claimed to be Confidential Business Information (CBI) or other information whose disclosure is restricted by statute. Do not submit information that you consider to be CBI or otherwise protected through *www.regulations.gov* or e-mail. The *www.regulations.gov* Web site is an "anonymous access" system, which means EPA will not know your identity or contact information unless you provide it in the body of your comment. If you send an e-mail comment directly to EPA without going through *www.regulations.gov* your e-mail address will be automatically captured and included as part of the comment that is placed in the public docket and made available on the Internet. If you submit an electronic comment, EPA recommends that you include your name and other contact information in the body of your comment and with any disk or CD–ROM you submit. If EPA cannot read your comment due to technical difficulties and cannot contact you for clarification, EPA may not be able to consider your comment. Electronic files should avoid the use of special characters, any form of encryption, and be free of any defects or viruses. For additional information about EPA's public docket, visit the EPA Docket Center homepage at *http://www.epa.gov/epahome/dockets.htm.*

FOR FURTHER INFORMATION CONTACT: Rochelle Boyd, Sector Policies and Program Division, (D243–02), Environmental Protection Agency, Research Triangle Park, NC 27711; telephone number: (919) 541–1390; fax number: (919) 541–3207; e-mail address: *boyd.rochelle@epa.gov.*

SUPPLEMENTARY INFORMATION:

How can I access the docket and/or submit comments?

EPA has established a public docket for this ICR under Docket ID No. EPA–HQ–OAR–2010–0469, which is available for online viewing at *www.regulations.gov*, or in person viewing at the Air and Radiation Docket in the EPA Docket Center (EPA/DC), EPA West, Room 3334, 1301 Constitution Ave., NW., Washington, DC. The EPA/DC Public Reading Room is open from 8:30 a.m. to 4:30 p.m., Monday through Friday, excluding legal holidays. The telephone number for the Reading Room is 202–566–1744, and the telephone number for the Air and Radiation Docket is 202–566–1742.

Use *www.regulations.gov* to obtain a copy of the draft collection of information, submit or view public comments, access the index listing of the contents of the docket, and to access those documents in the public docket that are available electronically. Once in the system, select "search," then key in the docket ID number identified in this document.

What information is EPA particularly interested in?

Pursuant to PRA section 3506(c)(2)(A), EPA specifically solicits comments and information to enable it to:

(i) Evaluate whether the proposed collection of information is necessary for the proper performance of the functions of the Agency, including whether the information will have practical utility;

(ii) Evaluate the accuracy of the Agency's estimate of the burden of the proposed collection of information, including the validity of the methodology and assumptions used;

(iii) Enhance the quality, utility, and clarity of the information to be collected; and

(iv) Minimize the burden of the collection of information on those who are to respond, including through the use of appropriate automated electronic, mechanical, or other technological collection techniques or other forms of information technology (*e.g.,* permitting electronic submission of responses).

What should I consider when I prepare my comments for EPA?

You may find the following suggestions helpful for preparing your comments.

1. Explain your views as clearly as possible and provide specific examples.
2. Describe any assumptions that you used.
3. Provide copies of any technical information and/or data you used that support your views.
4. If you estimate potential burden or costs, explain how you arrived at the estimate that you provide.
5. Offer alternative ways to improve the collection activity.
6. Make sure to submit your comments by the deadline identified under **DATES**.
7. To ensure proper receipt by EPA, be sure to identify the docket ID number assigned to this action in the subject line on the first page of your response. You may also provide the name, date, and **Federal Register** citation.

What information collection activity or ICR does this apply to?

Affected entities: Respondents affected by this action are owners/operators of secondary aluminum production facilities. The secondary aluminum production source category includes any establishment using clean charge, aluminum scrap, or dross from aluminum production, as the raw material and performing one or more of the following processes: Scrap shredding, scrap drying/delacquering/decoating, thermal chip drying, furnace operations (*i.e.,* melting, holding, sweating, refining, fluxing, or alloying), recovery of aluminum from dross, in-line fluxing, or dross cooling. A secondary aluminum production facility may be independent or part of a primary aluminum production facility. For purposes of this subpart, aluminum die casting facilities, aluminum foundries, and aluminum extrusion facilities are not considered to be secondary aluminum production facilities if the only materials they melt are clean charge, customer returns, or internal scrap, and if they do not operate sweat furnaces, thermal chip dryers, or scrap dryers/delacquering kilns/decoating kilns. The federal emission standard that is the subject of this information collection is National Emission Standards for Hazardous Air Pollutants for Secondary Aluminum Production (40 CFR part 63, subpart RRR).

The North American Industry Classification System (NAICS) codes for respondents affected by the information collection are listed in the following table.

Category	Description	NAICS code
Industry	Secondary Smelting and Alloying of Aluminum	331314
	Primary Aluminum Production	331312
	Aluminum Sheet, Plate and Foil Manufacturing Facilities	331315
	Aluminum Extruded Product Manufacturing Facilities	331316
	Other Aluminum Rolling and Drawing Facilities	331319
	Aluminum Die Casting Facilities	331521
	Aluminum Foundry Facilities	331524

In addition to the source categories listed in the table above, operations with sweat furnaces are also affected by this information collection request and can be included in additional NAICS codes, 562920, 493110, 811490, 423320, 423930, 423120, 423140, 339999, 488410, etc.

Title: Information Collection Request for the National Emission Standards for Hazardous Air Pollutants for Secondary Aluminum Production Risk and Technology Review.

ICR numbers: EPA ICR No. 2400.01.

ICR status: This ICR is for a new information collection activity. An Agency may not conduct or sponsor, and a person is not required to respond to, a collection of information, unless it displays a currently valid OMB control number. The OMB control numbers for EPA's regulations in title 40 of the CFR, after appearing in the **Federal Register** when approved, are listed in 40 CFR part 9, and are displayed either by publication in the **Federal Register** or by other appropriate means, such as on the related collection instrument or form, if applicable. The display of OMB control numbers in certain EPA regulations is consolidated in 40 CFR part 9.

Abstract: This ICR is being conducted by EPA's Office of Air and Radiation to assist the EPA Administrator, as required by sections 112(d)(6) and 112(f) of the Clean Air Act (CAA), as amended, to determine the current affected population of secondary aluminum production processes and to reevaluate emission standards for this source category. This one-time collection will solicit information under authority of CAA section 114. EPA intends to provide the survey in electronic format. The survey will be sent to all companies identified as owning or operating secondary aluminum production facilities through information available to the Agency. EPA envisions allowing recipients 60 days to respond to the survey. Non-confidential information from this ICR would be made available to the public. The existing subpart RRR NESHAP regulates major sources of hazardous air pollutants (HAP) emissions from aluminum scrap shredders, thermal chip dryers, scrap dryers/delacquering kilns/decoating kilns, group 2 furnaces, sweat furnaces, dross only furnaces, rotary dross coolers, and secondary aluminum processing units (SAPU). SPAU include group 1 furnaces and in-line fluxers. Area sources of HAP are regulated only with respect to emissions of dioxins/furans from thermal chip dryers, scrap dryers/delacquering kilns/decoating kilns, sweat furnaces, and SPAU.

Section 112(f)(2) of the CAA directs EPA to conduct risk assessments on each source category subject to maximum achievable control technology (MACT) standards and determine if additional standards are needed to reduce residual risks. The section 112(f)(2) residual risk review is to be done within 8 years after promulgation. Section 112(d)(6) of the CAA requires EPA to review and revise the MACT standards, as necessary, taking into account developments in practices, processes, and control technologies. The section 112(d)(6) technology review is to be done at least every 8 years. The NESHAP for Secondary Aluminum Production (40 CFR part 63, subpart RRR) was first promulgated in 2000. In light of the statutory requirements for reviewing emission standards under CAA section 112, the Agency has concluded that obtaining updated information is important to inform its decisions on the secondary aluminum production NESHAP RTR.

Additional facility-specific information is needed to better characterize emission sources, refine the risk analysis, and develop revisions to the NESHAP, as appropriate. An update

of the 2005 National-Scale Air Toxics Assessment/National Emissions Inventory (NATA/NEI) data sets and more specific information needed for further rulemaking would be derived from the ICR. Information collected directly from companies owning or operating secondary aluminum production facilities will have the greatest practical utility for purposes of performing the RTR as information from the affected industry will contain the most up-to-date, accurate, and reliable equipment and operational data for each facility.

It is essential for the EPA to have an updated database reflecting the post-MACT configurations of secondary aluminum manufacturing affected sources and air pollution control systems to use in the regulatory analyses required under CAA sections 112(d) and (f).

The data collected will be used to update facility information and equipment configuration, develop new estimates of the population of affected units, and identify the control measures and emission limits being used for compliance with the existing NESHAP. This information, along with existing permitted emission limits will be used to establish a baseline for purposes of the regulatory reviews. The emissions test data collected will be used to verify the performance of existing control measures, examine variability in emissions, evaluate emission limits, and to determine the performance of superior control measures that may be considered for purposes of reducing residual risk. Emissions data may also be used along with process and emission unit details to consider subcategories for further regulation and to estimate the environmental and cost impacts associated with any regulatory options considered.

In addition to informing the RTR regulatory analyses for the secondary aluminum production industry, it is EPA's intent that the NATA/NEI updates supplied through this information collection be used in future versions of the NATA/NEI and its successor, the Emissions Inventory System. The NEI is used by EPA, States, and the public for a variety of purposes including tracking of national trends in emissions of criteria and hazardous air pollutants. More information in the NEI can be found at *http://www.epa.gov/air/data/neidb.html.*

This collection of information is mandatory under CAA section 114 (42 U.S.C. 7414). All information submitted to EPA pursuant to this ICR for which a claim of confidentiality is made is safeguarded according to Agency policies in 40 CFR part 2, subpart B.

Burden Statement: The projected cost and hour burden for industry for this one-time collection of information is $3,430,000 and 36,248 hours. This burden is based on an estimated 400 respondents to the survey. This ICR does not include any requirements that would cause the respondents to incur either capital or start-up costs. Operation and maintenance costs of $1200 are estimated for postage to mail in the survey response to EPA. Burden means the total time, effort, or financial resources expended by persons to generate, maintain, retain, or disclose or provide information to or for a Federal agency. This includes the time needed to review instructions; develop, acquire, install, and utilize technology and systems for the purposes of collecting, validating, and verifying information, processing and maintaining information, and disclosing and providing information; adjust the existing ways to comply with any previously applicable instructions and requirements which have subsequently changed; train personnel to be able to respond to a collection of information; search data sources; complete and review the collection of information; and transmit or otherwise disclose the information.

The ICR provides a detailed explanation of the Agency's estimate, which is only briefly summarized here.

Estimated total number of potential respondents: 400.

Frequency of response: One time.

Estimated total average number of responses for each respondent: 1.

Estimated total annual burden hours: 36,248.

Estimated total annual burden costs: $3,430,000.

What is the next step in the process for this ICR?

EPA will consider the comments received and amend the ICR as appropriate. The final ICR package will then be submitted to OMB for review and approval pursuant to 5 CFR 1320.12. At that time, EPA will issue another **Federal Register** notice pursuant to 5 CFR 1320.5(a)(1)(iv) to announce the submission of the ICR to OMB and the opportunity to submit additional comments to OMB.

If you have any questions about this ICR or the approval process, please contact the technical person listed under **FOR FURTHER INFORMATION CONTACT**.

Dated: July 6, 2010.

Peter Tsirigotis,

Director, Sector Policies and Programs Division.

[FR Doc. 2010–18232 Filed 7–23–10; 8:45 am]

BILLING CODE 6560–50–P

ENVIRONMENTAL PROTECTION AGENCY

[EPA–HQ–OAR–2010–0133; FRL–9178–3]

Notice of Supplemental Determination for Renewable Fuels Produced Under the Final RFS2 Program From Canola Oil

AGENCY: Environmental Protection Agency (EPA).

ACTION: Notice of Data Availability (NODA).

SUMMARY: On March 26, 2010, the Environmental Protection Agency published changes to the Renewable Fuel Standard (RFS) program as required by the Energy Independence and Security Act (EISA) of 2007. EISA increased the volume of renewable fuel required to be blended into transportation fuel to 36 billion gallons by 2022. Furthermore, the Act established new eligibility requirements for four types of renewable fuel, each with their own annual volume mandates. The eligibility requirements include minimum lifecycle greenhouse gas (GHG) reduction thresholds for each type of renewable fuel. EPA conducted lifecycle GHG analyses for a number of biofuel feedstocks and production pathways as part of its March 26, 2010 final rule but, as indicated in the final rule, we did not have time to complete all the planned lifecycle GHG assessments for several specific renewable fuel pathways. Since the final rule, we have completed an assessment for an additional renewable fuel pathway, canola oil biodiesel. This Notice of Data Availability provides interested parties with information and an opportunity to comment on our proposed lifecycle analysis of canola oil biodiesel.

DATES: Comments must be received on or before August 25, 2010.

ADDRESSES: Submit your comments, identified by Docket ID No. EPA–HQ–OAR–2010–0133, by one of the following methods:

- *http://www.regulations.gov:* Follow the on-line instructions for submitting comments.
- *E-mail: asdinfo@epa.gov.*
- *Mail:* Air and Radiation Docket and Information Center, Environmental Protection Agency, Mailcode: 2822T,

1200 Pennsylvania Ave., NW., Washington, DC 20460.

• *Hand Delivery:* Air and Radiation Docket and Information Center, EPA/DC, EPA West, Room 3334, 1301 Constitution Ave., NW., Washington DC 20004. Such deliveries are only accepted during the Docket's normal hours of operation, and special arrangements should be made for deliveries of boxed information.

Instructions: Direct your comments to Docket ID No. EPA-HQ-OAR–2010–0133. EPA's policy is that all comments received will be included in the public docket without change and may be made available online at *http://www.regulations.gov*, including any personal information provided, unless the comment includes information claimed to be Confidential Business Information (CBI) or other information whose disclosure is restricted by statute. Do not submit information that you consider to be CBI or otherwise protected through *http://www.regulations.gov* or *asdinfo@epa.gov*. The *http://www.regulations.gov* Web site is an "anonymous access" system, which means EPA will not know your identity or contact information unless you provide it in the body of your comment. If you send an e-mail comment directly to EPA without going through *http://www.regulations.gov* your e-mail address will be automatically captured and included as part of the comment that is placed in the public docket and made available on the Internet. If you submit an electronic comment, EPA recommends that you include your name and other contact information in the body of your comment and with any disk or CD-ROM you submit. If EPA cannot read your comment due to technical difficulties and cannot contact you for clarification, EPA may not be able to consider your comment. Electronic files should avoid the use of special characters, any form of encryption, and be free of any defects or viruses. For additional information about EPA's public docket visit the EPA Docket Center homepage at *http://www.epa.gov/epahome/dockets.htm*.

• *Docket:* All documents in the docket are listed in the *http://www.regulations.gov* index. Although listed in the index, some information is not publicly available, *e.g.*, CBI or other information whose disclosure is restricted by statute. Certain other material, such as copyrighted material, will be publicly available only in hard copy. Publicly available docket materials are available either electronically in *http://www.regulations.gov* or in hard copy at the Air and Radiation Docket and Information Center, EPA/DC, EPA West, Room 3334, 1301 Constitution Ave., NW., Washington, DC 20004. The Public Reading Room is open from 8:30 a.m. to 4:30 p.m., Monday through Friday, excluding legal holidays. The telephone number for the Public Reading Room is (202) 566–1744, and the telephone number for the Air Docket is (202) 566–1742.

FOR FURTHER INFORMATION CONTACT: Doris Wu, Office of Transportation and Air Quality, Transportation and Climate Division, Environmental Protection Agency, 2000 Traverwood Drive, Ann Arbor, MI 48105; telephone number: 734–214–4923; fax number: 734–214–4958; e-mail address: *wu.doris@epa.gov*.

SUPPLEMENTARY INFORMATION:

I. General Information

A. Does this action apply to me?

Entities potentially affected by this action are those involved with the production, distribution, and sale of transportation fuels, including gasoline and diesel fuel or renewable fuels such as ethanol and biodiesel. Regulated categories include:

This table is not intended to be exhaustive, but rather provides a guide for readers regarding entities likely to be regulated by the RFS2 program. This table lists the types of entities that EPA is now aware of that could potentially be regulated under the program. To determine whether your activities would be regulated, you should carefully examine the applicability criteria in 40 CFR part 80, Subpart M. If you have any questions regarding the applicability of this action to a particular entity, consult the person listed in the preceding section.

B. What should I consider as I prepare my comments for EPA?

1. *Submitting CBI.* Do not submit this information to EPA through *http://www.regulations.gov* or e-mail. Clearly mark the part or all of the information that you claim to be CBI. For CBI information in a disk or CD ROM that you mail to EPA, mark the outside of the disk or CD ROM as CBI and then identify electronically within the disk or CD ROM the specific information that is claimed as CBI. In addition to one complete version of the comment that includes information claimed as CBI, a copy of the comment that does not contain the information claimed as CBI must be submitted for inclusion in the public docket. Information so marked will not be disclosed except in accordance with procedures set forth in 40 CFR part 2.

2. *Tips for Preparing Your Comments.* When submitting comments, remember to:

• Identify the rulemaking by docket number and other identifying information (subject heading, **Federal Register** date and page number).

• Follow directions—The agency may ask you to respond to specific questions or organize comments by referencing a Code of Federal Regulations (CFR) part or section number.

• Explain why you agree or disagree; suggest alternatives and substitute language for your requested changes.

• Describe any assumptions and provide any technical information and/or data that you used.

• If you estimate potential costs or burdens, explain how you arrived at your estimate in sufficient detail to allow for it to be reproduced.

• Provide specific examples to illustrate your concerns, and suggest alternatives.

• Explain your views as clearly as possible, avoiding the use of profanity or personal threats.

• Make sure to submit your comments by the comment period deadline identified.

II. Background on Lifecycle GHG Threshold Determinations

A. Methodology

1. Scope of Analysis

On March 26, 2010, the Environmental Protection Agency (EPA) published changes to the Renewable Fuel Standard program as required by the Energy Independence and Security Act (EISA) of 2007. This rulemaking is commonly referred to as the "RFS2" final rule. As part of the RFS2 final rule we analyzed various categories of biofuels to determine if the complete lifecycle emissions associated with the production, distribution, and use of those fuels met minimum lifecycle greenhouse gas reduction thresholds as specified by EISA (*i.e.*, 60% for cellulosic biofuel, 50% for biomass-based diesel and advanced biofuel, and 20% for other renewable fuels). Our final rule had focused our lifecycle analyses on fuels that were anticipated to contribute relatively large volumes of renewable fuel by 2022, and thus did not cover all fuels that either are contributing or could potentially contribute to the program. In the final RFS2 rule we indicated that we did not have enough time to complete a lifecycle analysis for several specific pathways but would do so this year as a supplemental to the final rule. Since the final rule was issued, we have continued to examine several additional

pathways not analyzed for the final rule released in March. This Notice of Data Availability ("NODA") focuses on our recent modeling of the canola oil biodiesel pathway. The modeling approach EPA used in this effort is the same approach used in the final RFS2 rule for lifecycle analyses of other biofuels. Refer to the RFS2 final rule preamble and Regulatory Impact Analysis (RIA) for further discussion on our approach.

2. Models Used

The proposed analysis EPA has prepared for canola oil biodiesel uses the same set of models that was used for the final RFS2 rule: the Forestry and Agricultural Sector Optimization Model (FASOM) developed by Texas A&M University and others and the Food and Agricultural Policy and Research Institute international models as maintained by the Center for Agricultural and Rural Development (FAPRI-CARD) at Iowa State University. For details on the models used refer to the RFS2 final rule preamble or Regulatory Impact Analysis. These documents are available in the docket or online at *http://www.epa.gov/otaq/fuels/renewablefuels/regulations.htm.* The models require a number of inputs that are specific to the pathway being analyzed, including projected yield of feedstock per acre planted, projected fertilizer use, energy use in feedstock processing and energy use in fuel production. The docket includes detailed information on model inputs, assumptions, calculations, and the results of our proposed modeling for canola oil biodiesel.

3. Scenarios Modeled

To assess the impacts of an increase in renewable fuel volume from business-as-usual (what is likely to have occurred without EISA), we established reference and control cases for the RFS2 final rulemaking published in March 2010. The reference cases are projections of renewable fuel volumes without the enactment of EISA. The control cases are projections of the volumes of renewable fuel that might be used in the future to comply with the EISA volume mandates. The final rule reference case volumes were based on the Energy Information Administration's (EIA) Annual Energy Outlook (AEO) 2007 reference case projections. Our control case volumes were based on our projections of a feasible set of fuel types and feedstocks. Although actual volumes could be different, we believe the projections made for our control cases allow for a reasonable assessment of the potential GHG impacts per gallon of fuel for volumes of renewable fuel likely resulting from implementation of the RFS2 program.

For a number of fuel pathways such as ethanol from corn starch or biodiesel from soybean oil our reference case projected the business as usual volumes from EIA projections for that pathway which we were then able to compare to the control case volumes estimated to increase due to the EISA mandates. This incremental volume increase in renewable fuel volume was used to calculate lifecycle emissions per gallon or million British Thermal Units (mmBTU) of renewable fuel. Since our analysis normalizes the greenhouse gas emissions impacts on a per BTU basis, the effect of using different incremental volumes in our calculations is minimized.

We based our control case projection of 200 million gallons of biodiesel from canola per year in 2022 on a few factors, including historical volumes, potential feedstock availability and competitive uses (*e.g.*, for food or export instead of for domestic fuel), potential increases in crop acreage, and potential increases in crop and conversion yields. Our assessment is described further in the inputs and assumptions document that is available through the docket. Based in part on consultation with experts at the United States Department of Agriculture (USDA) and industry representatives, we believe that these volumes are realistic for the purpose of evaluating the impacts of producing biodiesel from canola oil. For biodiesel from canola oil, we do not have reference case predictions of business as usual volumes from EIA like we did for other fuels. We modeled the impact of an increase of 200 million gallons of biodiesel from canola per year by 2022 compared to the final RFS2 control case (from the March 2010 analysis) which assumed no biodiesel from canola oil. While we recognize that some canola oil has historically been used to make biodiesel for domestic use, this range of production (zero to 200 million gallons) covers the range of production likely by 2022. We believe that this modeled change in canola oil production for biodiesel provides an assessment of lifecycle GHG emissions per gallon of canola biodiesel which reasonably represents the per gallon impact over the likely range of canola biodiesel volumes expected through 2022.

B. Results of Lifecycle Analysis for Biodiesel From Canola Oil

As with other EPA analyses of fuel pathways with a significant land use impact, the proposed analysis for canola oil biodiesel includes a best estimate as well as a range of possible lifecycle greenhouse gas emission results based on formal uncertainty analysis conducted by the Agency.

EPA believes that its analysis of canola oil biodiesel represents the most up to date information currently available on the GHG emissions associated with each element of the full fuel lifecycle. Notably the analysis includes an assessment of uncertainty for key parameters. The graph included in the discussion below depicts the results of our analysis (including the uncertainty in the modeling) for a typical pathway for canola oil biodiesel.

We analyzed the lifecycle GHG emission impacts of producing biodiesel using canola oil as a feedstock assuming the same biodiesel production facility designs and conversion efficiencies as modeled for biodiesel produced from soybean oil. Canola oil biodiesel is produced using the same methods as soybean oil biodiesel, therefore plant designs are assumed to not significantly differ between these two feedstocks. Refer to the docket for more details on our key model inputs and assumptions, *e.g.*, crop yields, biofuel conversion yields, and agricultural energy use. These inputs and assumptions are based on our analysis of peer-reviewed literature and reflect our consideration of recommendations of experts within the canola and biodiesel industries and those from USDA as well as the experts at Texas A&M and Iowa State Universities who have designed the FASOM and FAPRI models.

As was the case for soybean oil biodiesel, production technology for canola oil biodiesel is mature and we have not projected in our assessment of canola oil biodiesel any significant improvements in plant technology; unanticipated energy saving improvements would further improve GHG performance of the fuel pathway. Additionally, similar to soybean oil biodiesel production, we assumed that the co-product glycerin would displace residual oil as a fuel source on an energy equivalent basis. This is based on the assumption that the glycerin market would be saturated in 2022 and that glycerin produced from biodiesel would not displace any additional petroleum glycerin production. However, the biodiesel glycerin would not be a waste and a low value use would be to use the glycerin as a fuel source. The fuel source assumed to be replaced by the glycerin is residual oil.

Figure II–1 shows the results of our proposed modeling. It shows the percent difference between lifecycle GHG emissions for the typical 2022 canola oil biodiesel as compared to the

petroleum diesel fuel 2005 baseline. Lifecycle GHG emissions equivalent to the diesel fuel baseline are represented on the graph by the zero on the X-axis. The results for canola biodiesel are that the midpoint of the range of results is a 50% reduction in GHG emissions compared to the diesel fuel baseline. The 95% confidence interval around that midpoint results in range of a 20% reduction to a 75% reduction compared to the diesel fuel 2005 baseline. These results, if finalized, would justify authorizing the generation of biomass-based diesel RINs for fuel produced by the canola oil biodiesel pathway modeled, assuming that the fuel meets the other definitional criteria for renewable fuel (*e.g.*, produced from renewable biomass, and used to reduce or replace transportation fuel) specified in EISA.

The material in the docket includes detailed information on the assumptions and modeling inputs used. As was the case for analyses of other crop-based biofuels, EPA projected increases in canola crop yield based on long term trends. Yield improvement rates recommended by industry were higher and were based on recent shorter term trends. While we have not modeled what specific impact a higher crop yield assumption would have on the resulting lifecycle GHG assessment, higher projected yields would tend to reduce land use impacts which could result in some improvement in projected GHG performance of canola biodiesel. EPA invites comment on all aspects of its proposed modeling of the canola oil biodiesel pathway, including all assumptions made and modeling inputs.

Table II–1 breaks down by stage the lifecycle GHG emissions for canola oil biodiesel and the 2005 diesel baseline. The biodiesel production process reflected in this table assumes that natural gas is used for process energy and accounts for co-product glycerin displacing residual oil. This table demonstrates the contribution of each stage and its relative significance. The docket also includes pathway analyses assuming coal or biomass is used instead of natural gas for process energy.

Figure II-1.

Distribution of Results for Canola Oil Biodiesel

Typical 2022 plant; natural gas

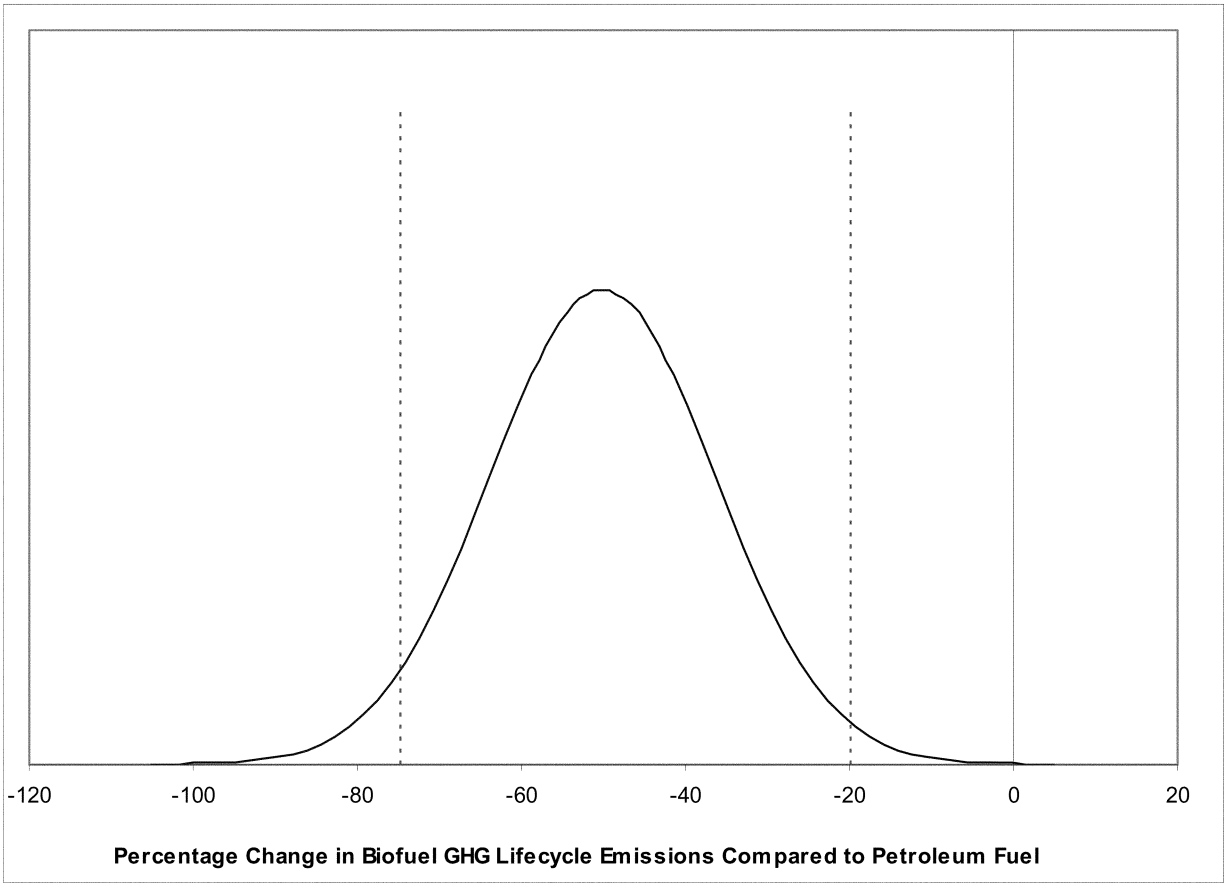

TABLE II–1—LIFECYCLE GHG EMISSIONS FOR CANOLA OIL BIODIESEL, 2022

[$kgCO_2e$/mmBTU]

Fuel type	Canola oil biodiesel	2005 Diesel baseline
Net Domestic Agriculture (w/o land use change)	8	
Net International Agriculture (w/o land use change)	0	
Domestic Land Use Change	3	
International Land Use Change, Mean (Low/High)	31 (7/61)	
Fuel Production	3	18
Fuel and Feedstock Transport	2	*
Tailpipe Emissions	1	79
Total Emissions, Mean (Low/High)	48 (25/78)	97

* Emissions included in fuel production stage.

Refer to the docket for more detailed outputs from our proposed lifecycle modeling. The docket includes a useful memorandum which summarizes relevant materials used for the canola biodiesel pathways analysis. Described in the memorandum, for example, are the input and assumptions document and detailed results spreadsheets (*e.g.*, foreign agricultural impacts, foreign agricultural energy use, FASOM and FAPRI model results) used to generate the results presented above. These additional materials are also available through the docket.

Dated: July 13, 2010.

Margo T. Oge,

Director, Office of Transportation & Air Quality.

[FR Doc. 2010–18227 Filed 7–23–10; 8:45 am]

BILLING CODE 6560–50–P

FEDERAL TRADE COMMISSION

Agency Information Collection Activities; Proposed Collection; Comment Request

AGENCY: Federal Trade Commission ("FTC" or "Commission").

ACTION: Notice.

SUMMARY: The information collection requirements described below will be submitted to the Office of Management and Budget ("OMB") for review, as required by the Paperwork Reduction Act ("PRA"). The FTC seeks public comments on its proposal to extend through December 31, 2013 the current OMB clearance for information collection requirements contained in its Affiliate Marketing Rule (or "Rule"). That clearance expires on December 31, 2010.

DATES: Comments must be filed by September 24, 2010.

ADDRESSES: Interested parties are invited to submit written comments electronically or in paper form by following the instructions in the Request for Comments part of the **SUPPLEMENTARY INFORMATION** section below. Comments in electronic form should be submitted by using the following weblink: (*https://ftcpublic.commentworks.com/AffiliateMarketingPRA*) (and following the instructions on the web-based form). Comments filed in paper form should be mailed or delivered to the following address: Federal Trade Commission, Office of the Secretary, Room H-135 (Annex J), 600 Pennsylvania Avenue, N.W., Washington, DC 20580, in the manner detailed in the **SUPPLEMENTARY INFORMATION** section below.

FOR FURTHER INFORMATION CONTACT: Requests for additional information should be addressed to Anthony Rodriguez, Attorney, Division of Privacy and Identity Protection, Bureau of Consumer Protection, Federal Trade Commission, 600 Pennsylvania Avenue, N.W., Washington, DC 20580, (202) 326-2757.

SUPPLEMENTARY INFORMATION:

Request for Comments

Interested parties are invited to submit written comments. Comments should refer to "Affiliate Marketing Rule: FTC File No. P105411" to facilitate the organization of comments. Please note that your comment – including your name and your state – will be placed on the public record of this proceeding, including on the publicly accessible FTC website, at (*http://www.ftc.gov/os/publiccomments.shtm*).

Because comments will be made public, they should not include any sensitive personal information, such as any individual's Social Security Number; date of birth; driver's license number or other state identification number, or foreign country equivalent; passport number; financial account number; or credit or debit card number. Comments also should not include any sensitive health information, such as medical records or other individually identifiable health information. In addition, comments should not include "[t]rade secret or any commercial or financial information which is obtained from any person and which is privileged or confidential" as provided in Section 6(f) of the Federal Trade Commission Act ("FTC Act"), 15 U.S.C. 46(f), and FTC Rule 4.10(a)(2), 16 CFR 4.10(a)(2). Comments containing matter for which confidential treatment is requested must be filed in paper form, must be clearly labeled "Confidential," and must comply with FTC Rule 4.9(c).[1]

Because paper mail addressed to the FTC is subject to delay due to heightened security screening, please consider submitting your comments in electronic form. Comments filed in electronic form should be submitted using the following weblink (*https://ftcpublic.commentworks.com/AffiliateMarketingPRA*) (and following the instructions on the web-based form). To ensure that the Commission considers an electronic comment, you must file it on the web-based form at the weblink (*https://ftcpublic.commentworks.com/AffiliateMarketingPRA*). If this Notice appears at (*www.regulations.gov/search/index.jsp*), you may also file an electronic comment through that website. The Commission will consider all comments that regulations.gov forwards to it.

The FTC Act and other laws that the Commission administers permit the collection of public comments to consider and use in this proceeding as appropriate. The Commission will consider all timely and responsive

[1] The comment must be accompanied by an explicit request for confidential treatment, including the factual and legal basis for the request, and must identify the specific portions of the comment to be withheld from the public record. The request will be granted or denied by the Commission's General Counsel, consistent with applicable law and the public interest. *See* FTC Rule 4.9(c), 16 CFR 4.9(c).

public comments that it receives, whether filed in paper or electronic form. Comments received will be available to the public on the FTC website, to the extent practicable, at (*http://www.ftc.gov/os/publiccomments.shtm*). As a matter of discretion, the FTC makes every effort to remove home contact information for individuals from the public comments it receives before placing those comments on the FTC website. More information, including routine uses permitted by the Privacy Act, may be found in the FTC's privacy policy, at (*http://www.ftc.gov/ftc/privacy.shtm*).

Under the PRA, 44 U.S.C. 3501-3521, federal agencies must obtain approval from OMB for each collection of information they conduct or sponsor. "Collection of information" means agency requests or requirements that members of the public submit reports, keep records, or provide information to a third party. 44 U.S.C. 3502(3); 5 CFR 1320.3(c). As required by section 3506(c)(2)(A) of the PRA, the FTC is providing this opportunity for public comment before requesting that OMB extend the existing paperwork clearance for the regulations noted herein.

The FTC invites comments on: (1) whether the required collection of information is necessary for the proper performance of the functions of the agency, including whether the information has practical utility; (2) the accuracy of the agency's estimate of the burden of the required collection of information, including the validity of the methodology and assumptions used; (3) ways to enhance the quality, utility, and clarity of the information to be collected; and (4) ways to minimize the burden of the collection of information on those who are to respond, including through the use of appropriate automated, electronic, mechanical, or other technological collection techniques or other forms of information technology, *e.g.*, permitting electronic submission of responses.

All comments should be filed as prescribed in the **ADDRESSES** section above, and must be received on or before September 24, 2010.

Background

The Affiliate Marketing Rule, 16 CFR Part 680, was proposed by the FTC under section 214 of the Fair and Accurate Credit Transactions Act ("FACT Act"), Pub. L. No. 108-159 (December 6, 2003). The FACT Act amended the Fair Credit Reporting Act, 15 U.S.C. 1681 *et seq.*, which was enacted to enable consumers to protect the privacy of their consumer credit information. As mandated by the FACT Act, the Rule specifies disclosure requirements for certain affiliated companies subject to the Commission's jurisdiction. Except as discussed below, these requirements constitute "collections of information" for purposes of the PRA. Specifically, the FACT Act and the Rule require covered entities to provide consumers with notice and an opportunity to opt out of the use of certain information before sending marketing solicitations. The Rule generally provides that, if a company communicates certain information about a consumer ("eligibility information") to an affiliate, the affiliate may not use that information to make or send solicitations to the consumer unless the consumer is given notice and a reasonable opportunity to opt out of such use of the information and the consumer does not opt out.

To minimize compliance costs and burdens for entities, particularly any small businesses that may be affected, the Rule contains model disclosures and opt-out notices that may be used to satisfy the statutory requirements. The Rule also gives covered entities flexibility to satisfy the notice and opt-out requirement by sending the consumer a free-standing opt-out notice or by adding the opt-out notice to the privacy notices already provided to consumers, such as those provided in accordance with the provisions of Title V, subtitle A of the GLBA. In either event, the time necessary to prepare or incorporate an opt-out notice would be minimal because those entities could either use the model disclosure verbatim or base their own disclosures upon it. Moreover, verbatim adoption of the model notice does not constitute a PRA "collection of information."[2]

Burden statement:

Except where otherwise specifically noted, staff's estimates of burden are based on its knowledge of the consumer credit industries and knowledge of the entities over which the Commission has jurisdiction. This said, estimating PRA burden of the Rule's disclosure requirements is difficult given the highly diverse group of affected entities that may use certain eligibility information shared by their affiliates to send marketing notices to consumers.

The estimates provided in this burden statement may well overstate actual burden. As noted above, verbatim adoption of the disclosure of information provided by the Federal government is not a "collection of information" to which to assign PRA burden estimates, and an unknown number of covered entities will opt to use the model disclosure language. Second, an uncertain, but possibly significant, number of entities subject to the FTC's jurisdiction do not have affiliates and thus would not be covered by section 214 of the FACT Act or the Rule. Third, Commission staff does not know how many companies subject to the FTC's jurisdiction under the Rule actually share eligibility information among affiliates and, of those, how many affiliates use such information to make marketing solicitations to consumers. Fourth, still other entities may choose to rely on the exceptions to the Rule's notice and opt-out requirements.[3] Finally, the population estimates below to apply further calculations are based on industry data that, while providing tallies of business entities within industries and industry segments, does not identify those entities individually. Thus, there is no clear path to ascertain how many individual businesses have newly entered and departed within a given industry classification, from one year to the next or from one triennial PRA clearance cycle to the next. Accordingly, there is no ready way to quantify how many establishments accounted for in the data reflects those previously accounted for in the FTC's prior PRA analysis, *i.e.*, entities that would already have experienced a declining learning curve applying the Rule with the passage of time. For simplicity, the FTC analysis will continue to treat covered entities as newly undergoing the previously assumed learning curve cycle, although this would effectively overstate estimated burden for unidentified covered entities that have remained in existence since OMB's most recently issued PRA clearance for the Rule.[4]

As in the past, FTC staff's estimates assume a higher burden will be incurred during the first year of a prospective OMB three-year clearance, with a lesser burden for each of the subsequent two years because the opt-out notice to consumers is required to be given only once. Institutions may provide for an indefinite period for the opt-out or they

[2] "The public disclosure of information originally supplied by the Federal government to the recipient for purpose of disclosure to the public is not included within [the definition of collection of information]." 5 CFR 1320.3(c)(2).

[3] Exceptions include, for example, having a preexisting business relationship with a consumer, using information in response to a communication initiated by the consumer, and solicitations authorized or requested by the consumer.

[4] On December 27, 2007, OMB granted three years' clearance for the Rule under Control No. 3084-0131.

may time limit it, but for no less than five years.

Staff's labor cost estimates take into account: managerial and professional time for reviewing internal policies and determining compliance obligations; technical time for creating the notice and opt-out, in either paper or electronic form; and clerical time for disseminating the notice and opt-out.[5] In addition, staff's cost estimates presume that the availability of model disclosures and opt-out notices will simplify the compliance review and implementation processes, thereby significantly reducing the cost of compliance. Moreover, the Rule gives entities considerable flexibility to determine the scope and duration of the opt-out. Indeed, this flexibility permits entities to send a single joint notice on behalf of all of its affiliates.

Estimated total average annual hours burden: 1,043,961 hours

Based, in part, on industry data regarding the number of businesses under various industry codes, staff estimates that 1,101,780 non-GLBA entities under FTC jurisdiction have affiliates and would be affected by the Rule.[6] Staff further estimates that there are an average of 5 businesses per family or affiliated relationship, and that the affiliated entities will choose to send a joint notice, as permitted by the Rule. Thus, an estimated 220,356 non-GLBA business families may send the affiliate marketing notice. Staff also estimates that non-GLBA entities under the jurisdiction of the FTC would each incur 14 hours of burden during the prospective requested three-year PRA clearance period, comprised of a projected 7 hours of managerial time, 2 hours of technical time, and 5 hours of clerical assistance.

Based on the above, total burden for non-GLBA entities during the prospective three-year clearance period would be approximately 3,084,984 hours, cumulatively. Associated labor cost would total $100,841,592.[7] These estimates include the start-up burden and attendant costs, such as determining compliance obligations. Non-GLBA entities, however, will give notice only once during the clearance period ahead. Thus, averaged over that three-year period, the estimated annual burden for non-GLBA entities is 1,028,328 hours and $33,613,864 in labor costs.[8]

Entities that are subject to the Commission's GLBA privacy notice regulation already provide privacy notices to their customers.[9] Because the FACT Act and the Rule contemplate that the affiliate marketing notice can be included in the GLBA notices, the burden on GLBA regulated entities would be greatly reduced. Accordingly, the GLBA entities would incur 6 hours of burden during the first year of the clearance period, comprised of a projected 5 hours of managerial time and 1 hour of technical time to execute the notice, given that the Rule provides a model.[10] Staff further estimates that 3,350 GLBA entities under the FTC's jurisdiction would be affected,[11] so that the total burden for GLBA entities during the first year of the clearance period would approximate 20,100 hours and $850,364 in associated labor costs.[12] Allowing for increased familiarity with procedure, the PRA burden in ensuing years would decline, with GLBA entities each incurring an estimated 4 hours of annual burden (3 hours of managerial time and 1 hour of technical time) during the remaining two years of the clearance, amounting to 13,400 hours and $558,244 in labor costs in each of the ensuing two years. Thus, averaged over the three-year clearance period, the estimated annual burden for GLBA entities is 15,633 hours and $655,618 in labor costs.

Cumulatively for both GLBA and non-GLBA entities, the average annual burden over the prospective three-year clearance period is 1,043,961 burden hours and $34,269,482 in labor costs. GLBA entities are already providing notices to their customers so there are no new capital or non-labor costs, as this notice may be consolidated into their current notices. For non-GLBA entities, the Rule provides for simple and concise model forms that institutions may use to comply. Thus, any capital or non-labor costs associated with compliance for these entities are negligible.

Willard K. Tom

General Counsel

[FR Doc. 2010–18226 Filed 7–23–10; 8:45 am]

BILLING CODE 6750–01–S

[5] No clerical time was included in staff's burden analysis for GLBA entities as the notice would likely be combined with existing GLBA notices.

[6] This estimate is derived from an analysis of a database of U.S. businesses based on SIC codes for businesses that market goods or services to consumers, which included the following industries: transportation services; communication; electric, gas, and sanitary services; retail trade; finance, insurance, and real estate; and services (excluding business services and engineering, management services). *See* (*http://www.naics.com/search.htm*). This estimate excludes businesses not subject to the FTC's jurisdiction and businesses that do not use data or information subject to the rule. To the resulting sub-total (6,677,796), staff applies a continuing assumed rate of affiliation of 16.75 percent, *see* 69 FR 33324, 33334 (June 15, 2004), reduced by a continuing estimate of 100,000 entities subject to the Commission's GLBA privacy notice regulations, *see id.*, applied to the same assumed rate of affiliation. The net total is 1,101,780.

[7] The associated labor cost is based on the labor cost burden per notice by adding the hourly mean private sector wages for managerial, technical, and clerical work and multiplying that sum by the estimated number of hours. The classifications used are "Management Occupations" for managerial employees, "Computer and Mathematical Science Occupations" for technical staff, and "Office and Administrative Support" for clerical workers. *See* National Compensation Survey: Occupational Earnings in the United States 2008, U.S. Department of Labor released August 2009, Bulletin 2720,Table 3 ("Summary: Full-time civilian workers: Mean and median hourly, weekly, and annual earnings and mean weekly and annual hours") (*http://www.bls.gov/ncs/ocs/sp/nctb0717.pdf*). The respective private sector hourly wages for these classifications are $43.60, $35.84, and $16.15. Estimated hours spent for each labor category are 7, 2, and 5, respectively. Multiplying each occupation's hourly wage by the associated time estimate, labor cost burden per notice equals $457.63. This subtotal is then multiplied by the estimated number of non-GLB business families projected to send the affiliate marketing notice (220,356) to determine cumulative labor cost burden for non-GLBA entities ($100,841,592).

[8] 3,084,984 hours ÷ 3 = 1,028,328; $100,841,592÷ 3 = $33,613,864.

[9] Financial institutions must provide a privacy notice at the time the customer relationship is established and then annually so long as the relationship continues. Staff's estimates assume that the affiliate marketing opt-out will be incorporated in the institution's initial and annual notices.

[10] As stated above, no clerical time is included in the estimate because the notice likely would be combined with existing GLBA notices.

[11] Based on the previously stated estimates of 100,000 GLBA business entities at an assumed rate of affiliation of 16.75 percent (16,750), divided by the presumed ratio of 5 businesses per family, this yields a total of 3,350 GLBA business families subject to the Rule.

[12] 3,350 GLBA entities × [($43.60 × 5 hours) + ($35.84 × 1 hour)] = $850,364.

DEPARTMENT OF HEALTH AND HUMAN SERVICES

Office of the Secretary

Seeking Public Comment on Draft National Health Security Strategy Biennial Implementation Plan

AGENCY: Department of Health and Human Services, Office of the Secretary.

ACTION: Notice.

Authority: Public Health Service Act, 42 U.S.C. 300hh–1.

SUMMARY: To help the Nation achieve national health security and to implement the first quadrennial *National Health Security Strategy (NHSS) of the United States of America* (2009) and build upon the *NHSS Interim Implementation Guide for the National Health Security Strategy of the United States of America* (2009) the U.S. Government has drafted a NHSS Biennial Implementation Plan (BIP).

This document is intended to describe the priority activities to occur during fiscal years 2011 and 2012 of implementation so that all sectors and segments of the Nation are working collectively and leveraging resources to achieve the same outcomes. The activities include responsible entities, timelines and measures. The target audience for the BIP is the Nation (individuals, families, communities including all sectors and governments, states and the Federal Government). It also outlines a framework for evaluation of impact of the NHSS.

This document is submitted for public consideration and comment for a period of 30 calendar days at *http://www.phe.gov/preparedness/planning/authority/nhss/comments/*. The Office of the Assistant Secretary of Preparedness and Response (ASPR) within the Department of Health and Human Services (HHS) is submitting this document for public consideration as the lead agency in a broad interagency process to draft the guidance.

DATES: The public is encouraged to submit written comments on this proposed document. Comments may be submitted to HHS/ASPR in electronic form at the HHS/ASPR e-mail address and URL shown below. All comments should be submitted by August 25, 2010. All written comments received in response to this notice will be available for review by request. This document is available in hard-copy for all those that request it from the Federal point of contact.

FOR FURTHER INFORMATION CONTACT: Lisa Kaplowitz, Deputy Assistant Secretary, Office of Policy and Planning, Office of the Assistant Secretary for Preparedness and Response, U.S. Department of Health and Human Services, 200 Independence Avenue, SW., Washington, DC 20201; phone: 202–205–2882; *http://www.phe.gov/preparedness/planning/authority/nhss/comments/;* e-mail address: *nhss@hhs.gov.*

SUPPLEMENTARY INFORMATION: The *National Health Security Strategy (2009)* can be found at: *http://www.phe.gov/Preparedness/planning/authority/nhss/Pages/default.aspx.*

Dated: July 16, 2010.

Nicole Lurie,

Assistant Secretary for Preparedness and Response.

[FR Doc. 2010–18332 Filed 7–23–10; 8:45 am]

BILLING CODE 4150–37–P

DEPARTMENT OF HEALTH AND HUMAN SERVICES

Health Resources and Services Administration

Agency Information Collection Activities: Submission for OMB Review; Comment Request

Periodically, the Health Resources and Services Administration (HRSA) publishes abstracts of information collection requests under review by the Office of Management and Budget (OMB), in compliance with the Paperwork Reduction Act of 1995 (44 U.S.C. Chapter 35). To request a copy of the clearance requests submitted to OMB for review, e-mail *paperwork@hrsa.gov* or call the HRSA Reports Clearance Office on (301) 443–1129.

The following request has been submitted to the Office of Management and Budget for review under the Paperwork Reduction Act of 1995:

Proposed Project: Children's Hospital Graduate Medical Education (CHGME) Payment Program Annual Report (OMB No. 0915–0313)—Extension

The CHGME Payment Program was enacted by Public Law 106–129 to provide Federal support for graduate medical education (GME) to freestanding children's hospitals, similar to Medicare GME support received by other, non-children's hospitals. The legislation indicates that eligible children's hospitals will receive payments for both direct and indirect medical education. Direct payments are designed to offset the expenses associated with operating approved graduate medical residency training programs and indirect payments are designed to compensate hospitals for expenses associated with the treatment of more severely ill patients and the additional costs relating to teaching residents in such programs.

The CHGME Payment Program was reauthorized for a period of five years in October 2006 by Public Law 109–307. The reauthorizing legislation requires that participating children's hospitals provide information about their residency training programs in an annual report that will be an addendum to the hospitals' annual applications for funds.

Data are required to be collected on the (1) types of training programs that the hospital provided for residents such as general pediatrics, internal medicine/pediatrics, and pediatric subspecialties including both medical subspecialties certified and non-medical subspecialties; (2) the number of training positions for residents, the number of such positions recruited to fill, and the number of positions filled; (3) the types of training that the hospital provided for residents related to the health care needs of different populations such as children who are underserved for reasons of family income or geographic location, including rural and urban areas; (4) changes in residency training including changes in curricula, training experiences, and types of training programs, and benefits that have resulted from such changes and changes for purposes of training residents in the measurement and improvement and the quality and safety of patient care; and (5) the numbers of residents (disaggregated by specialty and subspecialty) who completed training in the academic year and care for children within the borders of the service area of the hospital or within the borders of the State in which the hospital is located.

Form name	Number of respondents	Responses per respondent	Total number of responses	Hours per response	Total burden hours
Screening Instrument (HRSA 100–1)	56	1	56	9.2	515.2
Annual Report: Hospital and Program-Level Information (HRSA 100–2 and 3)	56	1	56	78.7	4407.2
Total	56		56	87.9	4922.4

Written comments and recommendations concerning the proposed information collection should be sent within 30 days of this notice to the desk officer for HRSA, either by e-mail to *OIRA_submission@omb.eop.gov* or by fax to 202–395–6974. Please direct all correspondence to the "attention of the desk officer for HRSA."

Dated: July 20, 2010.

Sahira Rafiullah,

Director, Division of Policy and Information Coordination.

[FR Doc. 2010–18146 Filed 7–23–10; 8:45 am]

BILLING CODE 4165–15–P

DEPARTMENT OF HEALTH AND HUMAN SERVICES

Administration for Children and Families

Submission for OMB Review; Comment Request

Title: Guidance for Tribal TANF.

OMB No.: 0970–0157

Description: 42 U.S.C. 612 (Section 412 of the Social Security Act) requires each Indian Tribe that elects to administer and operate a Temporary Assistance for Needy Families (TANF) program to submit a TANF Tribal Plan. The TANF Tribal Plan is a mandatory statement submitted to the Secretary by the Indian Tribe, which consists of an outline of how the Indian Tribes TANF program will be administered and operated. It is used by the Secretary to determine whether the plan is approvable and to determine that the Indian Tribe is eligible to receive a TANF assistance grant. It is also made available to the public.

Respondents: Indian Tribes applying to operate a TANF program.

ANNUAL BURDEN ESTIMATES

Instrument	Number of respondents	Number of responses per respondent	Average burden hours per response	Total burden hours
Request for State Data Needed to Determine the Amount of a Tribal Family Assistance Grant	20	1	68	1,360

Estimated Total Annual Burden Hours: 1,360.

Additional Information:

Copies of the proposed collection may be obtained by writing to the Administration for Children and Families, Office of Administration, Office of Information Services, 370 L'Enfant Promenade, SW., Washington, DC 20447, *Attn:* ACF Reports Clearance Officer. All requests should be identified by the title of the information collection. *E-mail address: infocollection@acf.hhs.gov.*

OMB Comment:

OMB is required to make a decision concerning the collection of information between 30 and 60 days after publication of this document in the **Federal Register**. Therefore, a comment is best assured of having its full effect if OMB receives it within 30 days of publication. Written comments and recommendations for the proposed information collection should be sent directly to the following: Office of Management and Budget, Paperwork Reduction Project, *Fax:* 202–395–7285, *E-mail: OIRA_SUBMISSION@OMB.EOP.GOV, Attn:* Desk Officer for the Administration for Children and Families.

Dated: July 21, 2010.

Robert Sargis,

Reports Clearance Officer.

[FR Doc. 2010–18170 Filed 7–23–10; 8:45 am]

BILLING CODE 4184–01–P

DEPARTMENT OF HEALTH AND HUMAN SERVICES

Administration for Children and Families

Submission for OMB Review; Comment Request

Title: Request for State Data Needed to Determine Amount of a Tribal Family Assistance Grant.

OMB No.: 0970–0173.

Description: 42 U.S.C. 612 (Section 412 of the Social Security Act) gives federally recognized Indian Tribes the opportunity to apply to operate a Tribal Temporary Assistance for Needy Families (TANF) program. The Act specifies that the Secretary shall use State-submitted data to determine the amount of the grant to the Tribe. This form (letter) is used to request those data from the States. ACF is proposing to extend this information collection without change.

Respondents: States that have Indian Tribes applying to operate a TANF program.

ANNUAL BURDEN ESTIMATES

Instrument	Number of respondents	Number of responses per respondent	Average burden hours per response	Total burden hours
Request for State Data Needed to Determine the Amount of Tribal Family Assistance Grant	4	1	42	168

Estimated Total Annual Burden Hours: 168.

Additional Information: Copies of the proposed collection may be obtained by writing to the Administration for Children and Families, Office of Administration, Office of Information Services, 370 L'Enfant Promenade, SW., Washington, DC 20447, Attn: ACF Reports Clearance Officer. All requests should be identified by the title of the information collection. E-mail address: *infocollection@acf.hhs.gov.*

OMB Comment: OMB is required to make a decision concerning the collection of information between 30 and 60 days after publication of this document in the **Federal Register.** Therefore, a comment is best assured of having its full effect if OMB receives it

within 30 days of publication. Written comments and recommendations for the proposed information collection should be sent directly to the following:

Office of Management and Budget, Paperwork Reduction Project. Fax: 202–395–7285. E-mail: *OIRA_SUBMISSION@OMB.EOP.GOV.* Attn: Desk Officer for the Administration for Children and Families.

Dated: July 21, 2010.

Robert Sargis,

Reports Clearance Officer.

[FR Doc. 2010–18171 Filed 7–23–10; 8:45 am]

BILLING CODE 4184–01–P

DEPARTMENT OF HEALTH AND HUMAN SERVICES

Centers for Medicare & Medicaid Services

[CMS–2336–PN]

Medicare and Medicaid Programs; Application by Det Norske Veritas Healthcare for Deeming Authority for Critical Access Hospitals (CAHs)

AGENCY: Centers for Medicare & Medicaid Services (CMS), HHS.

ACTION: Proposed notice.

SUMMARY: This proposed notice with comment period acknowledges the receipt of an application from Det Norske Veritas Healthcare (DNVHC) for recognition as a national accrediting organization for critical access hospitals (CAHs) that wish to participate in the Medicare or Medicaid programs.

Section 1865(a)(3)(A) of the Social Security Act requires that within 60 days of receipt of an organization's complete application, we publish a notice that identifies the national accrediting body making the request, describes the nature of the request, and provides at least a 30-day public comment period.

DATES: To be assured consideration, comments must be received at one of the addresses provided below, no later than 5 p.m. on August 25, 2010.

ADDRESSES: In commenting, please refer to file code CMS–2336–PN. Because of staff and resource limitations, we cannot accept comments by facsimile (FAX) transmission.

You may submit comments in one of four ways (please choose only one of the ways listed):

1. *Electronically.* You may submit electronic comments on this regulation to *http://www.regulations.gov.* Follow the instructions under the "More Search Options" tab.

2. *By regular mail.* You may mail written comments to the following address only:

Centers for Medicare & Medicaid Services, Department of Health and Human Services, Attention: CMS–2336–PN, P.O. Box 8016, Baltimore, MD 21244–8016.

Please allow sufficient time for mailed comments to be received before the close of the comment period.

3. *By express or overnight mail.* You may send written comments to the following address only:

Centers for Medicare & Medicaid Services, Department of Health and Human Services, Attention: CMS–2336–PN, Mail Stop C4–26–05, 7500 Security Boulevard, Baltimore, MD 21244–1850.

4. *By hand or courier.* If you prefer, you may deliver (by hand or courier) your written comments before the close of the comment period to either of the following addresses:

a. For delivery in Washington, DC—

Centers for Medicare & Medicaid Services, Department of Health and Human Services, Room 445–G, Hubert H. Humphrey Building, 200 Independence Avenue, SW., Washington, DC 20201

(Because access to the interior of the Hubert H. Humphrey Building is not readily available to persons without Federal government identification, commenters are encouraged to leave their comments in the CMS drop slots located in the main lobby of the building. A stamp-in clock is available for persons wishing to retain a proof of filing by stamping in and retaining an extra copy of the comments being filed.)

b. For delivery in Baltimore, MD—

Centers for Medicare & Medicaid Services, Department of Health and Human Services, 7500 Security Boulevard, Baltimore, MD 21244–1850

If you intend to deliver your comments to the Baltimore address, please call telephone number (410) 786–7195 in advance to schedule your arrival with one of our staff members.

Comments mailed to the addresses indicated as appropriate for hand or courier delivery may be delayed and received after the comment period.

For information on viewing public comments, see the beginning of the **SUPPLEMENTARY INFORMATION** section.

FOR FURTHER INFORMATION CONTACT: Lillian Williams, (410) 786–8636. Patricia Chmielewski, (410) 786–6899.

SUPPLEMENTARY INFORMATION:

Inspection of Public Comments: All comments received before the close of the comment period are available for viewing by the public, including any personally identifiable or confidential business information that is included in a comment. We post all comments received before the close of the comment period on the following Web site as soon as possible after they have been received: *http://www.regulations.gov.* Follow the search instructions on that Web site to view public comments.

Comments received timely will also be available for public inspection as they are received, generally beginning approximately 3 weeks after publication of a document, at the headquarters of the Centers for Medicare & Medicaid Services, 7500 Security Boulevard, Baltimore, Maryland 21244, Monday through Friday of each week from 8:30 a.m. to 4 p.m. To schedule an appointment to view public comments, phone 1–800–743–3951.

I. Background

Under the Medicare program, eligible beneficiaries may receive covered services from a Critical Access Hospital (CAH), provided certain requirements are met. Sections 1820(c)(2)(B) and 1861(mm) of the Social Security Act (the Act) establish distinct criteria for facilities seeking designation as a CAH. Regulations concerning provider agreements are in 42 CFR part 489 and those pertaining to activities relating to the survey and certification of facilities are in 42 CFR part 488. The regulations at 42 CFR part 485, subpart F specify the conditions that a CAH must meet in order to participate in the Medicare program. The scope of covered services and the conditions for Medicare payment for CAHs are set forth at § 413.70.

Generally, in order to enter into a provider agreement with the Medicare program, a CAH must first be certified by a State survey agency as complying with the conditions or requirements set forth in part 485 of our CMS regulations. Thereafter, the CAH is subject to regular surveys by a State survey agency to determine whether it continues to meet these requirements. There is an alternative, however, to surveys by State agencies.

Section 1865(a)(1) of the Act provides that, if a provider entity demonstrates through accreditation by an approved national accrediting organization that all applicable Medicare conditions are met or exceeded, we will deem those provider entities as having met the requirements. Accreditation by an accrediting organization is voluntary and is not required for Medicare participation.

If an accrediting organization is recognized by the Secretary as having standards for accreditation that meet or exceed Medicare requirements, any provider entity accredited by the national accrediting body's approved program would be deemed to meet the Medicare conditions. A national accrediting organization applying for deeming authority under part 488, subpart A of our rules must provide us with reasonable assurance that the accrediting organization requires the accredited provider entities to meet requirements that are at least as stringent as the Medicare conditions. Our regulations concerning the re-approval of accrediting organizations are set forth at § 488.4 and § 488.8(d)(3). The regulations at § 488.8(d)(3) require accrediting organizations to reapply for continued deeming authority every 6 years or sooner, as determined by CMS.

II. Approval of Deeming Organizations

Section 1865(a)(2) of the Act and our regulations at § 488.8(a) require that our findings concerning review and re-approval of a national accrediting organization's requirements consider, among other factors, the applying accrediting organization's requirements for accreditation; survey procedures; resources for conducting required surveys; capacity to furnish information for use in enforcement activities; monitoring procedures for provider entities found not in compliance with the conditions or requirements; and, ability to provide us with the necessary data for validation.

Section 1865(a)(3)(A) of the Act further requires that we publish, within 60 days of receipt of an organization's complete application, a notice identifying the national accrediting body making the request, describing the nature of the request, and providing at least a 30-day public comment period. We have 210 days from the receipt of a complete application to publish notice of approval or denial of the application.

The purpose of this proposed notice is to inform the public of DNVHC's request for CAH deeming authority. This notice also solicits public comment on whether DNVHC's requirements meet or exceed the Medicare CAH conditions of participation (CoPs).

III. Evaluation of Deeming Authority Request

DNVHC submitted all the necessary materials to enable us to make a determination concerning its request for approval as an accreditation organization for CAHs. This application was determined to be complete on June 3, 2010. Under section 1865(a)(2) of the Act and our regulations at § 488.8 (Federal review of accrediting organizations), our review and evaluation of DNVHC will be conducted in accordance with, but not necessarily limited to, the following factors:

- The equivalency of DNVHC's standards for a CAH as compared with CMS' CAH CoPs.
- DNVHC's survey process to determine the following:
  + The composition of the survey team, surveyor qualifications, and the ability of the organization to provide continuing surveyor training.
  + The comparability of DNVHC's processes to those of State agencies, including survey frequency, and the ability to investigate and respond appropriately to complaints against accredited facilities.
  + DNVHC's processes and procedures for monitoring CAHs found out of compliance with DNVHC's program requirements. These monitoring procedures are used only when DNVHC identifies noncompliance. If noncompliance is identified through validation reviews, the State survey agency monitors corrections as specified at § 488.7(d).
  + DNVHC's capacity to report deficiencies to the surveyed facilities and respond to the facility's plan of correction in a timely manner.
  + DNVHC's capacity to provide us with electronic data and reports necessary for effective validation and assessment of the organization's survey process.
  + The adequacy of DNVHC's staff and other resources, and its financial viability.
  + DNVHC's capacity to adequately fund required surveys.
  + DNVHC's policies with respect to whether surveys are announced or unannounced, to assure that surveys are unannounced.
  + NVHC's agreement to provide us with a copy of the most current accreditation survey together with any other information related to the survey as we may require (including corrective action plans).

IV. Response to Public Comments

Because of the large number of public comments we normally receive on **Federal Register** documents, we are not able to acknowledge or respond to them individually. We will consider all comments we receive by the date and time specified in the **DATES** section of this preamble, and, when we proceed with a subsequent document, we will respond to the comments in the preamble to that document.

Upon completion of our evaluation, including evaluation of comments received as a result of this notice, we will publish a final notice in the **Federal Register** announcing the result of our evaluation.

III. Collection of Information Requirements Collection of Information Requirements

This document does not impose information collection and recordkeeping requirements. Consequently, it need not be reviewed by the Office of Management and Budget under the authority of the Paperwork Reduction Act of 1995 (44 U.S.C. 35).

VI. Regulatory Impact Statement

In accordance with the provisions of Executive Order 12866, the Office of Management and Budget did not review this proposed notice.

In accordance with Executive Order 13132, we have determined that this proposed notice would not have a significant effect on the rights of States, local or tribal governments.

Authority: Section 1865 of the Social Security Act (42 U.S.C. 1395bb). (Catalog of Federal Domestic Assistance Program No. 93.778, Medical Assistance Program; No. 93.773 Medicare—Hospital Insurance Program; and No. 93.774, Medicare—Supplementary Medical Insurance Program)

Dated: July 14, 2010.

Marilyn Tavenner,

Principal Deputy Administrator and Chief Operating Officer, Centers for Medicare & Medicaid Services.

[FR Doc. 2010–18371 Filed 7–23–10; 8:45 am]

BILLING CODE 4120–01–P

DEPARTMENT OF HEALTH AND HUMAN SERVICES

National Institutes of Health

Center for Scientific Review; Notice of Closed Meetings

Pursuant to section 10(d) of the Federal Advisory Committee Act, as amended (5 U.S.C. App.), notice is hereby given of the following meetings.

The meetings will be closed to the public in accordance with the provisions set forth in sections 552b(c)(4) and 552b(c)(6), title 5 U.S.C., as amended. The grant applications and the discussions could disclose confidential trade secrets or commercial property such as patentable material, and personal information concerning individuals associated with the grant applications, the disclosure of which

would constitute a clearly unwarranted invasion of personal privacy.

Name of Committee: Center for Scientific Review Special Emphasis Panel; Member Conflict: Obesity and Cancer.

Date: August 4, 2010.

Time: 10 a.m. to 11:30 a.m.

Agenda: To review and evaluate grant applications.

Place: National Institutes of Health, 6701 Rockledge Drive, Bethesda, MD 20892 (Telephone Conference Call).

Contact Person: Ann A. Jerkins, PhD, Scientific Review Officer, Center for Scientific Review, National Institutes of Health, 6701 Rockledge Drive, Room 6154, MSC 7892, Bethesda, MD 20892, 301–435–4514, *jerkinsa@csr.nih.gov*.

This notice is being published less than 15 days prior to the meeting due to the timing limitations imposed by the review and funding cycle.

Name of Committee: Center for Scientific Review Special Emphasis Panel; Renal Diseases.

Date: August 16, 2010.

Time: 6 a.m. to 8 p.m.

Agenda: To review and evaluate grant applications.

Place: National Institutes of Health, 6701 Rockledge Drive, Bethesda, MD 20892 (Virtual Meeting).

Contact Person: Najma Begum, PhD, Scientific Review Officer, Center for Scientific Review, National Institutes of Health, 6701 Rockledge Drive, Room 2186, MSC 7818, Bethesda, MD 20892, 301–435–1243, *begumn@csr.nih.gov*.

Name of Committee: Center for Scientific Review Special Emphasis Panel; Neurodifferentiation and Synoptic Plasticity.

Date: August 16, 2010.

Time: 1 p.m. to 3 p.m.

Agenda: To review and evaluate grant applications.

Place: National Institutes of Health, 6701 Rockledge Drive, Bethesda, MD 20892 (Telephone Conference Call).

Contact Person: Carole L. Jelsema, PhD, Chief and Scientific Review Officer, Center for Scientific Review, National Institutes of Health, 6701 Rockledge Drive, Room 4176, MSC 7850, Bethesda, MD 20892, (301) 435–1248, *jelsemac@csr.nih.gov*.

Name of Committee: Center for Scientific Review Special Emphasis Panel; Member Conflicts: Digestive Sciences.

Date: August 16, 2010.

Time: 12 p.m. to 3 p.m.

Agenda: To review and evaluate grant applications.

Place: National Institutes of Health, 6701 Rockledge Drive, Bethesda, MD 20892 (Telephone Conference Call).

Contact Person: Patricia Greenwel, PhD, Scientific Review Officer, Center for Scientific Review, National Institutes of Health, 6701 Rockledge Drive, Room 2178, MSC 7818, Bethesda, MD 20892, 301–435–1169, *greenwep@csr.nih.gov*.

(Catalogue of Federal Domestic Assistance Program Nos. 93.306, Comparative Medicine; 93.333, Clinical Research, 93.306, 93.333, 93.337, 93.393–93.396, 93.837–93.844, 93.846–93.878, 93.892, 93.893, National Institutes of Health, HHS)

Dated: July 20, 2010.

Jennifer Spaeth,

Director, Office of Federal Advisory Committee Policy.

[FR Doc. 2010–18202 Filed 7–23–10; 8:45 am]

BILLING CODE 4140–01–P

DEPARTMENT OF HEALTH AND HUMAN SERVICES

Centers for Medicare & Medicaid Services

[CMS–3232–N]

Medicare Program; Meeting of the Medicare Evidence Development and Coverage Advisory Committee—September 22, 2010

AGENCY: Centers for Medicare & Medicaid Services (CMS), HHS.

ACTION: Notice of meeting.

SUMMARY: This notice announces that a public meeting of the Medicare Evidence Development & Coverage Advisory Committee (MEDCAC) ("Committee") will be held on Wednesday, September 22, 2010. The Committee generally provides advice and recommendations concerning the adequacy of scientific evidence needed to determine whether certain medical items and services can be covered under the Medicare statute. This meeting will focus on the currently available evidence regarding the clinical benefits and harms of on-label and off-label use of bone morphogenetic proteins (BMPs). This meeting is open to the public in accordance with the Federal Advisory Committee Act (5 U.S.C. App. 2, section 10(a)).

DATES: *Meeting Date:* The public meeting will be held on Wednesday, September 22, 2010 from 7:30 a.m. until 4:30 p.m., Eastern Daylight Time (EDT).

Deadline for Submission of Written Comments: Written comments must be received at the address specified in the **ADDRESSES** section of this notice by 5 p.m. EDT, August 18, 2010. Once submitted, all comments are final.

Deadlines for Speaker Registration and Presentation Materials: The deadline to register to be a speaker and to submit powerpoint presentation materials and writings that will be used in support of an oral presentation, is 5 p.m., EDT on Wednesday August 18, 2010. Speakers may register by phone or via e-mail by contacting the person listed in the **FOR FURTHER INFORMATION CONTACT** section of this notice. Presentation materials must be received at the address specified in the **ADDRESSES** section of this notice.

Deadline for All Other Attendees Registration: Individuals may register online at *http://www.cms.gov/apps/events/event.asp?id=602&Kw=&Mh=NoMonth&cboOrder=date&Yr=NoYear&type=2*, via e-mail at *MEDCAC_Registration@cms.hhs.gov,* or by phone by contacting the person listed in the **FOR FURTHER INFORMATION CONTACT** section of this notice by 5 p.m. EDT, Wednesday, September 15, 2010. We will be broadcasting the meeting via Webinar. You must register for the Webinar portion of the meeting at *https://webinar.cms.hhs.gov/bmp/event/registration.html?preview=false* by 5 p.m. EDT, Friday, September 17, 2010.

Deadline for Submitting a Request for Special Accommodations: Persons attending the meeting who are hearing or visually impaired, or have a condition that requires special assistance or accommodations, are asked to contact the Executive Secretary as specified in the **FOR FURTHER INFORMATION CONTACT** section of this notice no later than 5 p.m., EDT Friday, September 3, 2010.

ADDRESSES: *Meeting Location:* The meeting will be held in the main auditorium of the Centers for Medicare & Medicaid Services, 7500 Security Boulevard, Baltimore, MD 21244.

Submission of Presentations and Comments: Presentation materials and written comments that will be presented at the meeting must be submitted via e-mail to *MedCACpresentations@cms.hhs.gov* or by regular mail to the contact listed in the **FOR FURTHER INFORMATION CONTACT** section of this notice by the date specified in the **DATES** section of this notice.

FOR FURTHER INFORMATION CONTACT: Maria Ellis, Executive Secretary for MEDCAC, Centers for Medicare & Medicaid Services, Office of Clinical Standards and Quality, Coverage and Analysis Group, C1–09–06, 7500 Security Boulevard, Baltimore, MD 21244 or contact Ms. Ellis by phone (410–786–0309) or via e-mail at *Maria.Ellis@cms.hhs.gov*.

SUPPLEMENTARY INFORMATION:

I. Background

MEDCAC, formerly known as the Medicare Coverage Advisory Committee (MCAC), provides advice and recommendations to CMS regarding clinical issues. (For more information on MCAC, see the December 14, 1998 **Federal Register** (63 FR 68780).) This notice announces the September 22, 2010, public meeting of the Committee.

During this meeting, the Committee will discuss the currently available evidence regarding the clinical benefits and harms of on-label and off-label use of bone morphogenetic proteins. Background information about this topic, including panel materials, is available at *http://www.cms.hhs.gov/center/coverage.asp*. We encourage the participation of appropriate organizations with expertise in the use of bone morphogenetic protein.

II. Meeting Format

This meeting is open to the public. The Committee will hear oral presentations from the public for approximately 45 minutes. The Committee may limit the number and duration of oral presentations to the time available. Your comments should focus on issues specific to the list of topics that we have proposed to the Committee. The list of research topics to be discussed at the meeting will be available on the following Web site prior to the meeting: *http://www.cms.hhs.gov/mcd/index_list.asp?list_type=mcac*. We require that you declare at the meeting whether you have any financial involvement with manufacturers (or their competitors) of any items or services being discussed.

The Committee will deliberate openly on the topics under consideration. Interested persons may observe the deliberations, but the Committee will not hear further comments during this time except at the request of the chairperson. The Committee will also allow a 15-minute unscheduled open public session for any attendee to address issues specific to the topics under consideration. At the conclusion of the day, the members will vote and the Committee will make its recommendation(s) to CMS.

III. Registration Instructions

CMS' Coverage and Analysis Group is coordinating meeting registration. While there is no registration fee, individuals must register to attend. You may register online at *http://www.cms.gov/apps/events/event.asp?id=602&Kw=&Mh=NoMonth&cboOrder=date&Yr=NoYear&type=2*, via e-mail at *MEDCAC_Registration@cms.hhs.gov,* or by phone by contacting the person listed in the **FOR FURTHER INFORMATION CONTACT** section of this notice by the deadline listed in the **DATES** section of this notice. Please provide your full name (as it appears on your state-issued driver's license), address, organization, telephone, fax number(s), and e-mail address. You will receive a registration confirmation with instructions for your arrival at the CMS complex or you will be notified the seating capacity has been reached. You must register for the Webinar portion of the meeting at *https://webinar.cms.hhs.gov/bmp/event/registration.html?preview=false* by the deadline listed in the **DATES** section of this notice.

IV. Security, Building, and Parking Guidelines

This meeting will be held in a Federal government building; therefore, Federal security measures are applicable. We recommend that confirmed registrants arrive reasonably early, but no earlier than 45 minutes prior to the start of the meeting, to allow additional time to clear security. Security measures include the following:

- Presentation of government-issued photographic identification to the Federal Protective Service or Guard Service personnel.
- Inspection of vehicle's interior and exterior (this includes engine and trunk inspection) at the entrance to the grounds. Parking permits and instructions will be issued after the vehicle inspection.
- Inspection, via metal detector or other applicable means of all persons brought entering the building. We note that all items brought into CMS, whether personal or for the purpose of presentation or to support a presentation, are subject to inspection. We cannot assume responsibility for coordinating the receipt, transfer, transport, storage, set-up, safety, or timely arrival of any personal belongings or items used for presentation or to support a presentation.

Note: Individuals who are not registered in advance will not be permitted to enter the building and will be unable to attend the meeting. The public may not enter the building earlier than 45 minutes prior to the convening of the meeting. All visitors must be escorted in areas other than the lower and first floor levels in the Central Building.

Authority: 5 U.S.C. App. 2, section 10(a).

(Catalog of Federal Domestic Assistance Program No. 93.773, Medicare—Hospital Insurance; and Program No. 93.774, Medicare—Supplementary Medical Insurance Program)

Dated: July 15, 2010.

Barry M. Straube,

Chief Medical Officer and Director, Office of Clinical Standards and Quality, Centers for Medicare & Medicaid Services.

[FR Doc. 2010–18209 Filed 7–23–10; 8:45 am]

BILLING CODE 4120–01–P

DEPARTMENT OF HEALTH AND HUMAN SERVICES

National Institutes of Health

National Institute on Alcohol Abuse and Alcoholism; Notice of Closed Meeting

Pursuant to section 10(d) of the Federal Advisory Committee Act, as amended (5 U.S.C. App), notice is hereby given of the following meeting.

The meeting will be closed to the public in accordance with the provisions set forth in sections 552b(c)(4) and 552b(c)(6), title 5 U.S.C., as amended. The grant applications and the discussions could disclose confidential trade secrets or commercial property such as patentable materials, and personal information concerning individuals associated with the grant applications, the disclosure of which would constitute a clearly unwarranted invasion of personal privacy.

Name of Committee: National Institute on Alcohol Abuse and Alcoholism; Initial Review Group Biomedical Research Review Subcommittee.

Date: October 18–19, 2010.

Time: 8 a.m. to 5 p.m.

Agenda: To review and evaluate grant applications.

Place: Hyatt Regency Bethesda, One Bethesda Metro Center, 7400 Wisconsin Avenue, Bethesda, MD 20814.

Contact Person: Philippe Marmillot, PhD, Scientific Review Officer, National Institutes of Health, National Institute on Alcohol Abuse and Alcoholism, 5635 Fishers Lane, Room 2019, Bethesda, MD 20892, 301–443–2861, *marmillotp@mail.nih.gov.*

(Catalogue of Federal Domestic Assistance Program Nos. 93.271. Alcohol Research Career Development Awards for Scientists and Clinicians; 93.272, Alcohol National Research Service Awards for Research Training; 93.273, Alcohol Research Programs; 93.891, Alcohol Research Center Grants; 93,701, ARRA Related Biomedical Research and Research Support Awards, National Institutes of Health, HHS)

Dated: July 14, 2010.

Jennifer Spaeth,

Director, Office of Federal Advisory Committee Policy.

[FR Doc. 2010–18203 Filed 7–23–10; 8:45 am]

BILLING CODE 4140–01–P

DEPARTMENT OF HEALTH AND HUMAN SERVICES

National Institutes of Health

NIH Consensus Development Conference on Inhaled Nitric Oxide Therapy for Premature Infants

Notice

Notice is hereby given of the National Institutes of Health (NIH) "NIH Consensus Development Conference on Inhaled Nitric Oxide Therapy for Premature Infants" to be held October 27–29, 2010, in the NIH Natcher Conference Center, 45 Center Drive, Bethesda, Maryland 20892. The conference will begin at 8:30 a.m. on October 27 and 28, and at 9 a.m. on October 29, and will be open to the public.

Infants born before the 37th week of pregnancy are said to be "premature" or "preterm" and face increased risk for a variety of complications. Babies born before the 28th week of pregnancy—more than 30,000 per year in the United States—are particularly vulnerable to breathing problems such as respiratory distress syndrome and respiratory failure due to their underdeveloped lungs. These infants often need respiratory support in the first days and weeks after birth. Those premature infants who still require supplemental oxygen 36 weeks after conception are diagnosed with bronchopulmonary dysplasia, which places them at greater risk for death or problems with long-term lung health, brain development, and brain function.

Nitric oxide is a chemical compound in gas form that is sometimes used to treat infants with severe breathing problems. Inhaled nitric oxide therapy was approved by the U.S. Food and Drug Administration in 2000 to treat term and near-term infants (born after the 33rd week of pregnancy) with respiratory failure. Inhaled nitric oxide therapy is typically administered in the neonatal intensive care unit using a device that delivers the drug in constant concentrations. It acts as a pulmonary vasodilator, widening the opening of blood vessels in the lungs. In term and near-term infants, use of this therapy may shorten the length of time respiratory support is required, thereby reducing progression to bronchopulmonary dysplasia and improving long-term lung health and brain development and function.

Since its approval, researchers have examined expanding the use of inhaled nitric oxide therapy to treat premature babies born at less than 34 weeks' gestation. Studies to evaluate its safety and efficacy for these infants have had mixed results in terms of key outcomes. Thus, the potential benefits and harms of its use for premature infants with varying degrees of respiratory illness are not completely understood.

To advance understanding of these important issues, the Eunice Kennedy Shriver National Institute of Child Health and Human Development and the Office of Medical Applications of Research of the NIH will convene a Consensus Development Conference from October 27–29, 2010. The conference will address the following key questions:

- Does inhaled nitric oxide therapy increase survival and/or reduce the occurrence or severity of bronchopulmonary dysplasia among premature infants who receive respiratory support?
- Are there short-term risks of inhaled nitric oxide therapy among premature infants who receive respiratory support?
- Are there effects of inhaled nitric oxide therapy on long-term pulmonary and/or neurodevelopmental outcomes among premature infants who receive respiratory support?
- Does the effect of inhaled nitric oxide therapy on bronchopulmonary dysplasia and/or death or neurodevelopmental impairment vary across subpopulations of premature infants?
- Does the effect of inhaled nitric oxide therapy on bronchopulmonary dysplasia and/or death or neurodevelopmental impairment vary by timing of initiation, mode of delivery, dose and duration, or concurrent therapies?
- What are the future research directions needed to better understand the risks, benefits, and alternatives to nitric oxide therapy for premature infants who receive respiratory support?

An impartial, independent panel will be charged with reviewing the available published literature in advance of the conference, including a systematic literature review commissioned through the Agency for Healthcare Research and Quality. The first day and a half of the conference will consist of presentations by expert researchers and practitioners and open public discussions. On Friday, October 29, the panel will present a statement of its collective assessment of the evidence to answer each of the questions above. The panel will also hold a press telebriefing to address questions from the media. The draft statement will be published online later that day, and the final version will be released approximately six weeks later. The primary sponsors of this meeting are the NIH Eunice Kennedy Shriver National Institute of Child Health and Human Development and the NIH Office of Medical Applications of Research.

Advance information about the conference and conference registration materials may be obtained from the NIH Consensus Development Program Information Center by calling 888–644–2667 or by sending e-mail to *consensus@mail.nih.gov.* The Information Center's mailing address is P.O. Box 2577, Kensington, Maryland 20891. Registration information is also available on the NIH Consensus Development Program Web site at *http://consensus.nih.gov*.

Please Note: The NIH has instituted security measures to ensure the safety of NIH employees and property. All visitors must be prepared to show a photo ID upon request. Visitors may be required to pass through a metal detector and have bags, backpacks, or purses inspected or x-rayed as they enter NIH buildings. For more information about the security measures at NIH, please visit the Web site at *http://www.nih.gov/about/visitorsecurity.htm*.

Dated: July 19, 2010.

Francis S. Collins,

Director, National Institutes of Health.

[FR Doc. 2010–18216 Filed 7–23–10; 8:45 am]

BILLING CODE 4140–01–P

DEPARTMENT OF HOMELAND SECURITY

U.S. Citizenship and Immigration Services

Agency Information Collection Activities: Form N–644, Revision of a Currently Approved Information Collection; Comment Request

ACTION: 30-Day notice of information collection under review: Form N–644, Application for Posthumous Citizenship; OMB Control No. 1615–0059.

The Department of Homeland Security, U.S. Citizenship and Immigration Services (USCIS) will be submitting the following information collection request to the Office of Management and Budget (OMB) for review and clearance in accordance with the Paperwork Reduction Act of 1995. This information collection was previously published in the **Federal Register** on April 22, 2010, at 75 FR 21013, allowing for a 60-day public comment period. The 60-day notice mentioned that during the 60-day comment period USCIS would be evaluating whether to revise the Form

N–644. On July 15, 2010, USCIS published a 30-day notice in the **Federal Register** at 75 FR 41216 extending the use of Form N–644. However, USCIS should have published a 30-day notice announcing a revision to the Form N–644, not an extension. Accordingly, this 30-day notice is published to let the public know that USCIS is revising Form N–644.

The purpose of this notice is to allow an additional 30 days for public comments. Comments are encouraged and will be accepted until August 25, 2010. This process is conducted in accordance with 5 CFR 1320.10.

Written comments and/or suggestions regarding the item(s) contained in this notice, especially regarding the estimated public burden and associated response time, should be directed to the Department of Homeland Security (DHS), and to the Office of Management and Budget (OMB) USCIS Desk Officer. Comments may be submitted to: USCIS, Chief, Regulatory Products Division, 111 Massachusetts Avenue, Washington, DC 20529–2210. Comments may also be submitted to DHS via facsimile to 202–272–8352 or via e-mail at *rfs.regs@dhs.gov*, and to the OMB USCIS Desk Officer via facsimile at 202–395–5806 or via e-mail at *oira_submission@omb.eop.gov*. When submitting comments by e-mail please make sure to add OMB Control Number 1615–0059 in the subject box. Written comments and suggestions from the public and affected agencies should address one or more of the following four points:

(1) Evaluate whether the proposed collection of information is necessary for the proper performance of the functions of the agency, including whether the information will have practical utility;

(2) Evaluate the accuracy of the agencies estimate of the burden of the proposed collection of information, including the validity of the methodology and assumptions used;

(3) Enhance the quality, utility, and clarity of the information to be collected; and

(4) Minimize the burden of the collection of information on those who are to respond, including through the use of appropriate automated, electronic, mechanical, or other technological collection techniques or other forms of information technology, e.g., permitting electronic submission of responses.

Overview of This Information Collection

(1) *Type of Information Collection:* Revision of a currently approved information collection.

(2) *Title of the Form/Collection:* Application for Posthumous Citizenship.

(3) *Agency form number, if any, and the applicable component of the Department of Homeland Security sponsoring the collection:* Form N–644; U.S. Citizenship and Immigration Services (USCIS).

(4) *Affected public who will be asked or required to respond, as well as a brief abstract: Primary: Individuals or Households.* This information collection will be used by USCIS to verify eligibility and review the request for awarding posthumous citizenship.

(5) *An estimate of the total number of respondents and the amount of time estimated for an average respondent to respond:* 50 responses at 1 hour and 50 minutes (1.83 hours) per response.

(6) *An estimate of the total public burden (in hours) associated with the collection:* 92 annual burden hours.

If you need a copy of the information collection instrument, please visit the Web site at: *http://www.regulations.gov.*

We may also be contacted at: USCIS, Regulatory Products Division, 111 Massachusetts Avenue, NW., Washington, DC 20529–2210; Telephone 202–272–8377.

Dated: July 20, 2010.

Sunday Aigbe,

Chief, Regulatory Products Division, U.S. Citizenship and Immigration Services, Department of Homeland Security.

[FR Doc. 2010–18149 Filed 7–23–10; 8:45 am]

BILLING CODE 9111–97–P

DEPARTMENT OF HOMELAND SECURITY

U.S. Customs and Border Protection

Agency Information Collection Activities: Permit To Transfer Containers to a Container Station

AGENCY: U.S. Customs and Border Protection, Department of Homeland Security.

ACTION: 30-Day notice and request for comments; Extension of an existing information collection: 1651–0049.

SUMMARY: U.S. Customs and Border Protection (CBP) of the Department of Homeland Security will be submitting the following information collection request to the Office of Management and Budget (OMB) for review and approval in accordance with the Paperwork Reduction Act: Permit to Transfer Containers to a Container Station. This is a proposed extension of an information collection that was previously approved. CBP is proposing that this information collection be extended with no change to the burden hours. This document is published to obtain comments from the public and affected agencies. This proposed information collection was previously published in the **Federal Register** (75 FR 26268) on May 11, 2010, allowing for a 60-day comment period. This notice allows for an additional 30 days for public comments. This process is conducted in accordance with 5 CFR 1320.10.

DATES: Written comments should be received on or before August 25, 2010.

ADDRESSES: Interested persons are invited to submit written comments on this proposed information collection to the Office of Information and Regulatory Affairs, Office of Management and Budget. Comments should be addressed to the OMB Desk Officer for Customs and Border Protection, Department of Homeland Security, and sent via electronic mail to *oira_submission@omb.eop.gov* or faxed to (202) 395–5806.

SUPPLEMENTARY INFORMATION: U.S. Customs and Border Protection (CBP) encourages the general public and affected Federal agencies to submit written comments and suggestions on proposed and/or continuing information collection requests pursuant to the Paperwork Reduction Act (Pub. L. 104–13). Your comments should address one of the following four points:

(1) Evaluate whether the proposed collection of information is necessary for the proper performance of the functions of the agency/component, including whether the information will have practical utility;

(2) Evaluate the accuracy of the agencies/components estimate of the burden of the proposed collection of information, including the validity of the methodology and assumptions used;

(3) Enhance the quality, utility, and clarity of the information to be collected; and

(4) Minimize the burden of the collections of information on those who are to respond, including the use of appropriate automated, electronic, mechanical, or other technological techniques or other forms of information.

Title: Permit to Transfer Containers to a Container Station.

OMB Number: 1651–0049.

Form Number: None.

Abstract: This information collection is in accordance with 19 CFR 19.46 which provides that when a person is granted a permit to operate a container station, the CBP port director may request a list of names, addresses, social security numbers, dates and places of birth of the persons employed by the operator. Respondents must provide this list to CBP within 30 calendar days after the date of receipt of a written request by the port director.

Current Actions: This submission is being made to extend the expiration date.

Type of Review: Extension (without change).

Affected Public: Businesses.

Estimated Number of Respondents: 350.

Estimated Number of Total Responses: 1,400.

Estimated Time per Response: 20 minutes.

Estimated Total Annual Burden Hours: 466.

If additional information is required contact: Tracey Denning, U.S. Customs and Border Protection, Office of Regulations and Rulings, 799 9th Street, NW., 7th Floor, Washington, DC 20229–1177, at 202–325–0265.

Dated: July 15, 2010.

Tracey Denning,

Agency Clearance Officer, U.S. Customs and Border Protection.

[FR Doc. 2010–18154 Filed 7–23–10; 8:45 am]

BILLING CODE 9111–14–P

DEPARTMENT OF HOMELAND SECURITY

Federal Emergency Management Agency

[Internal Agency Docket No. FEMA–1922–DR; Docket ID FEMA–2010–0002]

Montana; Major Disaster and Related Determinations

AGENCY: Federal Emergency Management Agency, DHS.

ACTION: Notice.

SUMMARY: This is a notice of the Presidential declaration of a major disaster for the State of Montana (FEMA–1922–DR), dated July 10, 2010, and related determinations.

DATES: *Effective Date:* July 10, 2010.

FOR FURTHER INFORMATION CONTACT: Peggy Miller, Recovery Directorate, Federal Emergency Management Agency, 500 C Street, SW., Washington, DC 20472, (202) 646–3886.

SUPPLEMENTARY INFORMATION: Notice is hereby given that, in a letter dated July 10, 2010, the President issued a major disaster declaration under the authority of the Robert T. Stafford Disaster Relief and Emergency Assistance Act, 42 U.S.C. 5121 *et seq.* (the "Stafford Act"), as follows:

I have determined that the damage in certain areas of the State of Montana resulting from severe storms and flooding beginning on June 15, 2010, and continuing, is of sufficient severity and magnitude to warrant a major disaster declaration under the Robert T. Stafford Disaster Relief and Emergency Assistance Act, 42 U.S.C. 5121 *et seq.* (the "Stafford Act"). Therefore, I declare that such a major disaster exists in the State of Montana.

In order to provide Federal assistance, you are hereby authorized to allocate from funds available for these purposes such amounts as you find necessary for Federal disaster assistance and administrative expenses.

You are authorized to provide Public Assistance in the designated areas and Hazard Mitigation throughout the State. Consistent with the requirement that Federal assistance is supplemental, any Federal funds provided under the Stafford Act for Public Assistance and Hazard Mitigation will be limited to 75 percent of the total eligible costs.

Further, you are authorized to make changes to this declaration for the approved assistance to the extent allowable under the Stafford Act.

The Federal Emergency Management Agency (FEMA) hereby gives notice that pursuant to the authority vested in the Administrator, under Executive Order 12148, as amended, Steven S. Ward, of FEMA is appointed to act as the Federal Coordinating Officer for this major disaster.

The following areas of the State of Montana have been designated as adversely affected by this major disaster:

Hill County and the Rocky Boy's Indian Reservation for Public Assistance.

All counties and Tribes within the State of Montana are eligible to apply for assistance under the Hazard Mitigation Grant Program.

The following Catalog of Federal Domestic Assistance Numbers (CFDA) are to be used for reporting and drawing funds: 97.030, Community Disaster Loans; 97.031, Cora Brown Fund; 97.032, Crisis Counseling; 97.033, Disaster Legal Services; 97.034, Disaster Unemployment Assistance (DUA); 97.046, Fire Management Assistance Grant; 97.048, Disaster Housing Assistance to Individuals and Households In Presidentially Declared Disaster Areas; 97.049, Presidentially Declared Disaster Assistance—Disaster Housing Operations for Individuals and Households; 97.050, Presidentially Declared Disaster Assistance to Individuals and Households—Other Needs; 97.036, Disaster Grants—Public Assistance (Presidentially Declared Disasters); 97.039, Hazard Mitigation Grant.

W. Craig Fugate,

Administrator, Federal Emergency Management Agency.

[FR Doc. 2010–18199 Filed 7–23–10; 8:45 am]

BILLING CODE 9111–23–P

DEPARTMENT OF HOUSING AND URBAN DEVELOPMENT

[Docket No. FR–5436–N–01]

Mortgagee Review Board: Administrative Actions

AGENCY: Office of the Assistant Secretary for Housing—Federal Housing Commissioner, Department of Housing and Urban Development (HUD).

ACTION: Notice.

SUMMARY: In compliance with Section 202(c) of the National Housing Act, this notice advises of the cause and description of administrative actions taken by HUD's Mortgagee Review Board against HUD-approved mortgagees.

FOR FURTHER INFORMATION CONTACT: Nancy A. Murray, Secretary to the Mortgagee Review Board, 451 Seventh Street, SW., Room B–133/3150, Washington, DC, 20410–8000; telephone: (202) 708–2224. A Telecommunications Device for Hearing-and Speech-Impaired Individuals (TTY) is available at (800) 877–8339 (Federal Information Relay Service).

SUPPLEMENTARY INFORMATION: Section 202(c)(5) of the National Housing Act (added by Section 142 of the Department of Housing and Urban Development Reform Act of 1989, Public Law 101–235, approved December 15, 1989), requires that HUD "publish a description of and the cause for administrative action against a HUD-approved mortgagee" by the Department's Mortgagee Review Board (Board). In compliance with the requirements of Section 202(c)(5), this notice advises of actions that have been taken by the Board from July 10, 2008 to March 18, 2010.

I. Settlement Agreements, Civil Money Penalties, Withdrawal of FHA Approval, Suspensions, Probations, and Reprimand

1. Academy Mortgage Corporation, Sandy, UT [Docket No. 10–1030–MR]

Action: On March 12, 2010, the Board entered into a settlement agreement with Academy Mortgage Corporation (Academy) requiring Academy to pay a

$30,000 civil money penaltywithout admitting fault or liability.

Cause: The Board took this action based on the following violations of HUD/FHA requirements alleged by HUD: Academy used the official HUD Seal and FHA acronym on its Web site; violated HUD's advertising requirements when it misrepresented that its Web site was owned and/endorsed by HUD; Academy continued to violate HUD requirements by displaying the Official Federal Housing Administration—Approved Lending Institution Seal ("FHA Seal") improperly on its Web site and failed to accurately identify Academy as the owner of the Web site; and failed to register the fictitious business name "fhamodification.com" in violation of HUD requirements.

2. Action Mortgage Corporation, Cranston, RI [Docket No. 10–1015–MR]

Action: On January 25, 2010, the Board issued a Notice of Administrative Action placing Action Mortgage Corporation (AMC) on six months probation and imposing a $7,000 civil money penalty.

Cause: The Board took this action based on the following violations of HUD/FHA requirements alleged by HUD: AMC used the official HUD Seal on its Web site and improperly implied that AMC was affiliated, connected, or had authorization from HUD for its Web site.

3. Americare Investment Group, Inc. d/b/a Premier Capital Lending, Arlington, TX [Docket No. 10–1629–MR]

Action: On January 25, 2010, the Board issued a Notice of Administrative Action to Americare Investment Group, Inc. (Americare) permanently withdrawing their FHA approval.

Cause: The Board took this action based on the following violations of HUD/FHA requirements alleged by HUD: Americare failed to comply with the terms of an October 8, 2009 settlement agreement with the Department.

4. Assurity Financial Services, Englewood, CO [Docket No 09–9552–MR]

Action: On April 20, 2010, the Board entered into a settlement agreement with Assurity Financial Services (Assurity) requiring Assurity to pay a $7,500 civil money penalty without admitting fault or liability.

Cause: The Board took this action based on the following violations of HUD/FHA requirements alleged by HUD: Assurity failed to implement a QC plan and conduct QC reviews in accordance with HUD/FHA requirements.

5. Automated Finance Corporation, Calabasas, CA [Docket No. 09–9825–MR]

Action: On October 30, 2009, the Board issued a Notice of Administrative Action to Automated Finance Corporation (Automated) permanently withdrawing their FHA approval.

Cause: The Board took this action based on the following violations of HUD/FHA requirements alleged by HUD: Automated closed its only approved office and failed to notify HUD.

6. CitiMortgage, Inc. O'Fallon, MO [Docket No. 10–1630–MR]

Action: On February 17, 2010, the Board entered into a settlement agreement with CitiMortgage, Inc. (CMI) requiring CMI to pay a $700,000 administrative payment to HUD without admitting fault or liability.

Cause: The Board took this action based on the following violations of HUD/FHArequirements alleged by HUD: CMI failed to report all delinquent loans to HUD no later than the fifth business day of the following month; CMI failed to correct fatal errors that resulted from its monthly reporting to HUD's Single Family Default Monitoring System; CMI failed to comply with HUD/FHA's default servicing reporting requirements when it failed to timely submit a default servicing report; and CMI failed to fully implement its Quality Control for oversight over this functional area.

7. Cooper and Shein, LLC d/b/a Great Oak Lending Partners, Timonium, MD [Docket No. 10–1035–MR]

Action: On January 25, 2010 the Board issued a Notice of Administrative Action to Cooper and Shein, LLC *d/b/a Great Oak Lending Partners* (Great Oak) placing them on a six month probation without admitting fault or liability and on March 1, 2010, proposing a settlement agreement requiring Great Oak to pay an $11,000 civil money penalty.

Cause: The Board took this action based on the following violations of HUD/FHA requirements alleged by HUD: Great Oak improperly used a simulated government form and seal to imply that correspondence relating to HUD's Home Equity Conversion Mortgage (HECM) program was from, or endorsed by HUD/FHA; and misrepresented HUD program requirements in an advertisement by informing recipients that they were "entitled" to monthly benefits through the HECM program.

8. Direct Lending, Inc., Livonia, MI [Docket No. 09–9303–MR]

Action: On October 30, 2009, the Board issued a Notice of Administrative action to Direct Lending, Inc. (Direct) permanently withdrawing their FHA approval.

Cause: The Board took this action based on the following violations of HUD/FHA requirements alleged by HUD: Direct failed to notify HUD that its business licenses had become inactive and revoked.

9. Equitable Trust Mortgage Corporation, Baltimore, MD [Docket No. 09–9604–MR]

Action: On December 14, 2009, the Board entered into a settlement agreement with Equitable Trust Mortgage Corporation (Equitable) requiring Equitable to pay a $277,500 civil money penalty and refund broker fees charged to borrowers totaling $147,589.81 without admitting fault or liability.

Cause: The Board took this action based on the following violations of HUD/FHA requirements alleged by HUD: Equitable failed to comply with HUD's requirements concerning Principal-Authorized Agent relationships by permitting loans to close in the name of an authorized agent and Equitable failed to comply with HUD's requirements when it charged borrowers a broker fee for loans it originated and also charged an origination fee, thus receiving a total loan origination fee in excess of the fee permitted by HUD.

10. Federal Guaranty Mortgage Company, Pembroke Pines, FL [Docket No. 09–9823–MR]

Action: On October 30, 2009, the Board issued a Notice of Administrative Action to Federal Guaranty Mortgage Company (Federal) permanently withdrawing their FHA approval.

Cause: The Board took this action based on the following violations of HUD/FHA requirements alleged by HUD: Federal closed its offices and failed to notify HUD.

11. Financial Mortgage USA, Inc. Honolulu, HI [Docket No. 07–7035–MR]

Action: On October 30, 2009, the Board issued a Notice of Administrative Action to Financial Mortgage USA (F.M. USA) imposing a $97,500 civil money penalty and permanently withdrawing F.M. USA's FHA approval.

Cause: The Board took this action based on the following violations of HUD/FHA requirements alleged by HUD: Financial failed to implement a Quality Control Plan in compliance

with HUD/FHA requirements; failed to provide a clear and effective separation between Financial Mortgage USA and an identity of interest life insurance company; and failed to comply with HUD/FHA housing counseling requirements.

12. Franklin First Financial LTD, Melville, NY [Docket No. 09–9822–MR]

Action: On March 23, 2010, the Board entered into a settlement agreement with Franklin First Financial LTD (Franklin First) requiring Franklin First to pay a civil money penalty in the amount of $413,500, to indemnify HUD on thirty-one loans, and reimburse fees to 78 borrowers without admitting fault or liability.

Cause: The Board took this action based on the following violations of HUD/FHA requirements alleged by HUD: Franklin First failed to comply with HUD's requirements concerning the registration of the following "doing business as" (d/b/a) names: Hancock First Mortgage Bankers, Kennedy First Mortgage Bankers, Presidents First Mortgage Bankers, and Senior Funding Group with the states in which it was doing business and with the Department; improperly used the HUD seal on its Web site; failed to ensure that loan applications were taken and processed by Franklin First employees; approved loans where borrowers failed to meet HUD's minimum credit requirements because Franklin First failed to provide adequate explanations for the derogatory credit; failed to adequately document the stability and/or source of income used to qualify for loans; failed to adequately document the source of funds used to close loans; approved loans with debt-to-income ratios that exceeded HUD standards without significant compensating factors and/or explanations; charged borrowers excessive and impermissible fees; failed to resolve discrepancies and/or conflicting information in loan documents; failed to complete quality control reviews for loans that were 60 days past due within the first six payments; and failed to have a written quality control plan as required by HUD/FHA.

13. Ideal Mortgage Bankers, Ltd. d/b/a Lend America, Melville, NY [Docket No. 09–9787–MR]

Action: On November 30, 2009, the Board issued a Notice of Administrative Action permanently withdrawing Ideal Mortgage Bankers, LTD's (Ideal) FHA approval and imposing a $512,500 civil money penalty.

Cause: The Board took this action based on the following violations of HUD/FHA Requirements alleged by HUD: Ideal used conflicting information in originating and obtaining HUD/FHA mortgage insurance; submitted false certifications on the HUD 92900–A, Addendum to Uniform Residential Loan Application, which stated that an employee of the lender had obtained the information contained in the application directly from the borrower; approved loans where borrowers failed to meet HUD's minimum credit requirements; failed to adequately document the stability and/or source of income used to qualify the borrowers for the FHA-insured mortgages; failed to document the source of funds used to close the loan or to satisfy various omitted liabilities; omitted liabilities from the underwriting analysis without supporting documentation, approved loans with debt-to-income ratios that exceeded HUD standards without significant compensating factors and/or explanation; exceeded HUD requirements when calculating the maximum insurable mortgage; failed to process a loan in accordance with HUD policy on loans to HUD employees; closed a loan with an excessive mortgage broker fee paid to an FHA-approved loan correspondent; failed to provide the required Verification of Rent to support its loan approval decision; submitted false certifications to HUD in connection with the submission of its Yearly Verification Report that concealed administrative sanctions and investigations by two of Ideal's state regulators; failed to notify HUD that one of Ideal's employees was involved in fraudulent FHA insured mortgage originations in a timely manner; permitted a borrower's Verification of Employment to be hand-carried by the borrower; and approved loans that were not in compliance with FHA appraisal requirements.

14. Ikon Mortgage Lenders, Inc., Ft. Lauderdale, FL [Docket No. 09–9910–MR]

Action: On November 30, 2009, the Board issued a Notice of Administrative Action permanently withdrawing Ikon Mortgage Lenders, Inc.'s (Ikon) FHA approval.

Cause: The Board took this action based on the following violations of HUD/FHA requirements alleged by HUD: Ikon failed to comply with HUD regulations and requirements when Ikon closed its only approved office and failed to notify HUD of the closure.

15. Home Mortgage, Inc., Burr Ridge, IL [Docket No. 10–1632–MR(S)]

Action: On January 25, 2010, the Board issued Home Mortgage Inc. (Home Mortgage) a Notice of Administrative Action suspending their HUD/FHA approval pending the outcome of a legal proceeding for federal indictment.

Cause: The Board took this action based on the following violations of HUD/FHA requirements alleged by HUD: Home Mortgage's Chief Executive Officer and 25% owner was indicted in the United States District Court for the Northern District of Illinois on June 23, 2009, when he was charged with one count of bank fraud for his role in a scheme to create fictitious loans and warehouse those loans; Home Mortgage failed to notify HUD of the indictment; and Home Mortgage failed to submit its Yearly Verification report for 2008.

16. Jett Financial Services, Inc., San Diego, CA [Docket No. 09–9845–MR]

Action: On October 30, 2009, the Board issued a Notice of Administrative Action to Jett Financial Services, Inc. (Jett) permanently withdrawing their FHA approval.

Cause: The Board took this action based on the following violations of HUD/FHA requirements alleged by HUD: Jett closed its only approved office and failed to notify HUD.

17. Liberty State Finance LLC, Parsippany, NJ [Docket No. 09–9560–MR]

Action: On November 30, 2009, the Board issued a Notice of Administrative Action permanently withdrawing Liberty State Finance LLC's (Liberty) FHA approval.

Cause: The Board took this action based on the following violations of HUD/FHA requirements alleged by HUD; Liberty knowingly employed individuals who were debarred and/or had been convicted of an offense that reflects adversely upon its integrity, competence, or fitness to meet the responsibilities of an FHA-approved mortgagee. Specifically, Liberty employed two individuals: (a) One who was debarred by HUD during the relevant period of time; and (b) one who had pleaded guilty to committing HUD fraud. Liberty also falsely certified on HUD Form 92900–A, Addendum to Uniform Residential Loan Application, that two mortgages were eligible for FHA insurance despite the fact that an ineligible individual was involved in the origination of the loans and failed to ensure that loan applications were taken and processed by authorized individuals and employees.

18. Meridian Lending, Monroe, GA [Docket No. 09–9914–MR]

Action: On April 21, 2010, the Board issued a Notice of Administrative Action to Meridian Lending (Meridian) immediately withdrawing their FHA approval for a period of one year.

Cause: The Board took this action based on the following violations of HUD/FHA requirements alleged by HUD: Meridian approved and closed a loan where the spouse was added to title without regard for his/her debts and overall creditworthiness; failed to perform quality control reviews of loans that went into default within the first six months; and failed to notify HUD of a business change when it failed to notify HUD that it had closed its home office.

19. Nations Direct, LLC, Irvine, CA [Docket No. 08–8099–MR]

Action: On December 1, 2009, the Board entered into a settlement agreement with Nations Direct, LLC (Nations Direct) requiring Nations Direct to pay a $3,500 civil money penalty.

Cause: The Board took this action based on the following violations of HUD/FHArequirements alleged by HUD; Nations Direct used the official HUD logo on materials posted on its corporate Web site.

20. North Shore Financial, Inc., East Meadow, NY [Docket No. 09–9623–MR]

Action: On November 30, 2009, the Board issued a Notice of Administrative Action to North Shore Financial, Inc. (North Shore) immediately and permanently withdrawing their FHA approval.

Cause: The Board took this action based on the following violations of HUD/FHA requirements alleged by HUD: North Shore permitted non-employees and/or mortgage brokers to participate in the loan process; failed to adequately staff its office because it never had any employees; failed to comply with multiple requests from HUD's OIG Office of Investigation to make its mortgage origination files available for review; and failed to provide evidence that original documents were reviewed, in that the loan files contained faxed documents with no indication that North Shore received and/or reviewed the original documents, or was able to clearly identify the source from which the documents originated.

21. Paramount Bond Mortgage Company, Inc., St Louis, MO [Docket No 09–9262–MR]

Action: On March 29, 2010, the Board entered into a settlement agreement with Paramount Bond Mortgage Company, Inc. (Paramount) requiring Paramount to pay a $68,500 civil money penalty and to indemnify HUD on nine loans without admitting fault or liability.

Cause: The Board took this action based on the following violations of HUD/FHA requirements alleged by HUD: Paramount failed to ensure that its employees were exclusive and did not have outside employment in the mortgage lending, real estate, or other related field; failed to adequately document income, a stable two-year employment history, and other forms of effective qualifying income; failed to document significant compensating factors for loans that exceeded HUD's debt-to-income ratio; failed to document the source and/or adequacy of borrowers' funds required to close the loans; and failed to include all of the borrower's liabilities in loan qualification for loans.

22. Premiere Service Mortgage Corp, Westchester, OH [Docket No. 09–9001–MR]

Action: On October 30, 2009, the Board issued a Notice of Administrative Action to Premiere Service Mortgage Corp. (Premiere) permanently withdrawing their FHA approval.

Cause: The Board took this action based on the following violations of HUD/FHA requirements alleged by HUD: Premiere closed its approved offices and failed to notify HUD.

23. Premium Capital Funding LLC d/b/a TopDot Mortgage, Jericho, NY [Docket No. 09–9001–MR]

Action: On January 25, 2010, the Board issued a Notice of Administrative Action to Premium Capital Funding LLC d/b/a TopDot Mortgage (Premium) permanently withdrawing their FHA approval and imposing a civil money penalty in the amount of $674,000.

Cause: The Board took this action based on the following violations of HUD/FHA requirements alleged by HUD: Premium failed to maintain and implement a Quality Control Plan in compliance with FHA requirements; failed to ensure that QC reviews were conducted on loans that went into default within the first six months; failed to resolve discrepancies and/or conflicting information in the origination of loans; failed to document a stable two-year employment history and other forms of effective income on loans; approved loans with debt-to-income ratios that exceeded HUD standards without significant compensating factors; failed to calculate income properly on loans; approved loans that did not meet minimum credit requirements; omitted revolving and installment debt liabilities on loans without documenting that the balance had been paid or otherwise should have been excluded; allowed an appraiser who was not on the FHA Roster to appraise a home on a loan; failed to ensure that loans met the eligibility requirements for FHA insurance; and exceeded HUD requirements when they calculated the maximum mortgage amount.

24. PrimeWest Mortgage Corporation, Lubbock, TX [Docket No. 09–9613–MR]

Action: On February 2, 2010, the Board entered into a settlement agreement with PrimeWest Mortgage Corp (PrimeWest) requiring PrimeWest to pay a $168,500 civil money penalty without admitting fault or liability.

Cause: The Board took this action based on the following violations of HUD/FHA requirements alleged by HUD: PrimeWest permitted a third-party to originate HUD/FHA insured mortgage loans, and subsequently submitted false certifications to HUD that these loans were originated by a full-time employee; failed to implement a Quality Control (QC) plan in compliance with HUD/FHA requirements; failed to maintain QC reports as required by HUD/FHA; failed to document the borrower's income in accordance with FHA requirements; and charged a borrower an unallowable tax service fee.

25. ProMortgage, Incorporated, Claremore, OK [Docket No. 09–9605–MR]

Action: On January 25, 2010, the Board issued a Notice of Administrative Action to ProMortgage, Inc. (ProMortgage) permanently withdrawing their FHA approval and imposing a civil money penalty in the amount of $124,000.

Cause: The Board took this action based on the following violations of HUD/FHA requirements alleged by HUD: ProMortgage failed to perform a Quality Control review on loans that went into default within the first six payments; failed to adopt and maintain a Quality Control (QC) Plan in accordance with HUD/FHA requirements; engaged in a prohibited branch arrangement; made false certifications on the form HUD–92900–A Addendum to the Uniform Residential Loan Application (URLA); failed to comply with HUD/FHA requirements for home office operations; failed to report compensation to an employee on IRS form W–2; and failed to process Verifications of Employment

(VOE) on loans in compliance with HUD/FHA requirements.

26. Strategic Mortgage Corp., Oklahoma City, OK [Docket No.09–9606–MR]

Action: On January 25, 2010, the Board issued a Notice of Administrative Action to Strategic Mortgage Corp.'s (Strategic) permanently withdrawing their FHA approval and imposing a civil money penalty against Strategic in the amount of $71,000.

Cause: The Board took this action based on the following violations of HUD/FHA requirements alleged by HUD: Strategic hired loan officers as independent contractors and reported their compensation on IRS form 1099's instead of the required W–2 forms; improperly charged borrowers a broker fee in addition to an approximate 1% origination fee for loans it originated; submitted a false certification to the Department in connection with an FHA-insured loan; and failed to disclose the broker fees charged to borrowers on the Good Faith Estimates (GFE); charged borrowers commitment fees without a written agreement guaranteeing the interest rate and discount points.

27. Sun West Mortgage Company, Inc., Cerritos, CA [Docket No. 09–9806–MR]

Action: On December 1, 2009, the Board entered into a settlement agreement with Sun West Mortgage Company (Sun West) requiring Sun West to pay a $10,000 civil money penalty without admitting fault or liability and issued Sun West a letter of reprimand.

Cause: The Board took this action based on the following violations of HUD/FHA requirements alleged by HUD: Sun West underwrote HECM loans without having the necessary HECM lending license in the state where the properties were located and failed to notify the Department that the Massachusetts Commissioner of Banks had issued a Findings of Fact and Temporary Order to Cease and Desist against it.

28. USA Home Loans, Towson, MD [Docket No. 09–9374–MR]

Action: On October 30, 2009, the Board issued a Notice of Administrative Action to permanently withdraw USA Home Loan's FHA approval.

Cause: The Board took this action based on the following violations of HUD/FHA requirements alleged by HUD: USA Home Loans failed to ensure HUD's minimum credit requirements were satisfied; failed to verify income and employment histories; failed to document the source and/or adequacy of funds for the closing costs and/or debt satisfaction; failed to verify documents faxed from an unknown source; failed to ensure that properties met the conditions specified on the Uniform Residential Appraisal Reports, and were eligible for FHA insurance; failed to discontinue misleading advertising concerning the FHA Mortgage Insurance Premium Refund, despite previous sanctions imposed by the Board for the same violation; charged prohibited, duplicative, and/or non-customary, non-reasonable fees to borrowers; failed to ensure the completeness and accuracy of the data submitted to HUD; failed to develop and implement a Quality Control Plan in accordance with HUD/FHA requirements; and failed to notify HUD/FHA that it did not renew its license to originate home mortgages.

29. US Bank, NA, Minneapolis, MN [Docket No. 09–9441–MR]

Action: On February 2, 2010, the Board entered into a settlement agreement with US Bank, NA requiring US Bank, NA to pay a $37,500 civil money penalty without admitting fault or liability.

Cause: The Board took this action based on the following violations of HUD/FHA requirements alleged by HUD: US Bank, NA failed to comply with HUD documentation requirements for the assignment of a defaulted multi-family apartment mortgage.

30. U.S. Mortgage Corp., Pine Brook, NJ [Docket No. 09–9615–MR]

Action: On October 30, 2009, the Board issued a Notice of Administrative Action to immediately and permanently withdraw U.S. Mortgage Corp.'s FHA approval.

Cause: The Board took this action based on the following violations of HUD/FHA requirements alleged by HUD: U.S. Mortgage Corp. no longer had the requisite warehouse line of credit or other mortgage-funding program acceptable to HUD.

32. VanDyk Mortgage Corporation, Grand Rapids, MI [Docket No. 09–9602–MR]

Action: On December 1, 2009, the Board entered into a settlement agreement with VanDyk Mortgage Corporation (VanDyk) requiring the payment of a $7,500 civil money penalty and requiring VanDyk to indemnify HUD against future losses on two loans without admitting fault or liability.

Cause: The Board took this action based on the following violations of HUD/FHA requirements alleged by HUD: VanDyk failed to ensure that loan applications were taken and processed by authorized employees; failed to document income in accordance with FHA requirements; and failed to adhere to FHA/HUD requirements regarding an employee's involvement in obtaining an FHA-insured loan for themselves.

II. Lenders That Failed To Meet Requirements for Annual Recertification of HUD/FHA Approval

Action: The Board voted to immediately withdraw FHA approval for a period of one year for each of the lenders listed below.

Cause: The Board took this action because the lenders were not in compliance with the Department's annual recertification requirements.

1. 1st Advantage Mortgage LLC, Lombard, IL.
2. 1st Alliance Banc Corporation, Chicago, IL.
3. 1st America LLC, Scottsdale, AZ.
4. 1st American Funding LLC, Fairfield, NJ.
5. 1st Family Mortgage Inc., Cooper City, FL.
6. 1st Nations Mortgage Corp, Louisville, CO.
7. 2CI Direct LLC, Westlake Village, CA.
8. 4G Funding Inc., Port Jefferson Stat, NY.
9. A & R Mortgage Inc., Downers Grove, IL.
10. AAA Mortgage Loans Investments, Saint Petersburg, FL.
11. AAA Reverse Mortgage Inc., Kissimmee, FL.
12. Aarow Mortgage Services Inc., Laurel, MD.
13. ABBA Mortgage Company LLC, Alexandria, VA.
14. ABC Home Loans, Reisterstown, MD.
15. ABN AMRO Mortgage Group, Troy, MI.
16. Absolute Lending Group Inc., Doral, FL.
17. Abstract Mortgage Services Inc., Nashville, TN.
18. Abundant Life Mortgage & Financial Serv, Reynoldsburg, OH.
19. Acacia Mortgage Corporation, Mesa, AZ.
20. Acadian Financial LLC, Grand Rapids, MI.
21. Accelerated Equity and Development Inc., Bluffdale, UT.
22. Accelerated Home Loan LLC, Toms River, NJ.
23. Access Financial Group Inc., McDonough, GA.
24. Access Funding Partners LLC, Saint Louis, MO.
25. Access Mortgage Corporation, Warwick, RI.
26. Acclaim Mortgage, Denver, CO.

27. Ace Mortgage Funding LLC, Indianapolis, IN.
28. Adam Smith Mortgage Inc., Marlborough, MA.
29. Adept Financial Consulting Inc., Minneapolis, MN.
30. Advanced Home Loans Corporation, Marco Island, FL.
31. Advanced Mortgage Solutions, Chandler, AZ.
32. Advantage First Mortgage Inc., Beaverton, OR.
33. Advantage Funding Group LLC, Saint Paul, MN.
34. Advantage One Mortgage Corporation, Plantation, FL.
35. Advantage One Mortgage Services Corp, Mount Laurel, NJ.
36. Advantix Lending Inc., Irvine, CA.
37. Advent Mortgage LLC, Louisville, KY.
38. Advocate Mortgage Group Inc., Baltimore, MD.
39. Aegis Wholesale Corporation, Houston, TX.
40. Aero Lending Group Inc., Dublin, OH.
41. AHM SV, Inc., Irving, TX.
42. AIM American Mortgage Inc., Houston, TX.
43. Alan Benjamin Mortgage Services LLC, Dublin, OH.
44. All American Mortgage Co Inc., Miami, FL.
45. All American Mortgage Inc., Hermitage, TN.
46. All Credit Mortgage LLC, De Pere, WI.
47. All Nations Mortgage Corp, Las Vegas, NV.
48. All Time Mortgage Corporation, Miami, FL.
49. All-America Financial Incorporated, Laguna Hills, CA.
50. All-American Mortgage Network, Southfield, MI.
51. Alliance Financial Services LLC, Montgomery, AL.
52. Alliance Mortgage Inc., Ridgeland, MS.
53. Alliance Resource Mortgage Company LLC, Mobile, AL (Titles 1 & 2).
54. Allied Capital Mortgage Company, Jacksonville, FL.
55. Alligriff Mortgage Corporation, Washington Ct House, OH.
56. Always Home Mortgage LLC, Syracuse, NY.
57. Ambassador Funding and Investments Inc., Valley Springs, CA.
58. AME Financial Corporation, Alpharetta, GA.
59. Ameribanc Financial Corporation, West Dundee, IL.
60. America East Mortgage LLC, Frederick, MD.
61. America First Mortgage Co Inc., Glen Carbon, IL.
62. America Mortgage Company, Chicago, IL.
63. America One Financial Inc., Portland, OR.
64. American Capital Mortgage Corp., Portland, OR.
65. American Central Mortgage Corp, Northlake, IL.
66. American Dream Funding Corporation, Maryville, IL.
67. American Elite Mortgage Inc., Salt Lake City, UT.
68. American Family Mortgage Corp, Wilmington, DE.
69. American Family Mortgage Partners Inc., Coral Gables, FL.
70. American Financial Partners LLC, Maryland Heights, MO.
71. American Group Mortgage Corp, Newtown, PA.
72. American Guaranty Mortgage, LLC, Greenwood Village, CO.
73. American Home Lending Inc., Bellmawr, NJ.
74. American Home Loans LLC, Fishers, IN.
75. American Home Mortgage Corp, Waterford, MI.
76. American Mortgage Funding Corp, Fort Lauderdale, FL.
77. American Mortgage Services LLC, Green Bay, WI.
78. American Nationwide Mortgage Inc., Las Vegas, NV.
79. American River Bank, Cameron Park, CA.
80. America's 1st Mortgage Services Inc., Augusta, GA.
81. America's Best Lending Network, Coral Springs, FL.
82. America's Best Mortgage Inc., Brandon, FL.
83. America's First Choice Lending, Inc., Duluth, GA.
84. America's Lending Solutions, LTD, Seven Hills, OH.
85. America's Mortgage Corp, Lake Worth, FL.
86. Americas Mortgage Group Inc., Columbus, OH.
87. Americas Mortgage Solutions LLC, Plantation, FL.
88. Americawide Inc., Westlake Village, CA.
89. Americor Lending Group Inc., Santa Ana, CA.
90. Ameritrust Mortgage Services LLC, Greenwood, IN.
91. Amstar Financial Mortgage Inc., Atlanta, GA.
92. Anastasia Mortgage Corp., St. Augustine, FL.
93. ANB Financial National Association, Bentonville, AZ.
94. Anchor Mortgage LLC, Gilbert, AZ.
95. Ancient City Mortgage, Saint Augustine, FL.
96. A–One Mortgage Consultants Inc., Hollywood, FL.
97. Apex Mortgage Services LLC, Columbus, OH.
98. Apex Mortgage Solutions LLC, Clearwater, FL.
99. Apollo Mortgage Group LLC, Birmingham, MI.
100. Arcadia Mortgage Inc., Salt Lake City, UT.
101. Argosy Financial Group, LLC, Lyndhurst, NJ.
102. Arizona Sonora Mortgage Inc., Tucson, AZ.
103. Armanini Inc., Wailuku, HI.
104. Artisan Mortgage LLC, Metairie, LA.
105. Artisan Mortgage LLC, Scottsdale, AZ.
106. Ashley Valley Financial Services Inc., Vernal, UT.
107. Asix Group, Inc., Indianapolis, IN (Titles 1 & 2).
108. Asset Managing Group Inc., Jacksonville, FL.
109. At Home Mortgage Corp, Neosho, MO.
110. Atlantic Capital Mortgage, Clearwater, FL.
111. Atlantic Coast Mortgage Svcs, Pleasantville, NJ.
112. Atlantic Lending Corporation, Jupiter, FL.
113. AtlantisFinancial Services Inc., Sewickley, PA.
114. Aurora Financial Services Inc., New Orleans, LA.
115. Avenya Inc., Brandon, FL.
116. Axis Mortgage Corporation, Oswego, IL.
117. Aztec Funding, Somerton, AZ.
118. Banc Home Loans LLC, Hanover, MD.
119. Banc Ohio Mortgage Corporation, Fairlawn, OH.
120. Bank of Astoria, Warrenton, OR.
121. Bank of Clark County, Vancouver, WA.
122. Bankcredit Mortgage Inc., Boca Raton, FL (Titles 1 & 2).
123. Bankstreet Mortgage LLC, New London, CT.
124. Bann Cor Mortgage Inc., Mission Viejo, CA (Titles 1 & 2).
125. Barrington Mortgage, Barrington, IL.
126. Bay Mortgage Services Inc., Plymouth, MA (Titles 1 & 2).
127. Bayside Mortgage Funding Inc., Clearwater, FL.
128. Becker Group Financial, Sacramento, CA.
129. Beneficial Financial Mortgage Corp, Hialeah, FL.
130. Bergin Financial Inc., Southfield, MI.
131. Berman Mortgage Corporation, Miami, FL.
132. Best American Mortgage Company LLC, Hinesville, GA.
133. Better Family Mortgage Corp., St. Louis, MO.

134. Bhatti Enterprises Inc., Ft Lauderdale, FL.
135. Black Diamond Mortgage Inc., Oakbrook Terrace, IL.
136. Blatz Mortgage Company LLC, Prattville, AL.
137. Blee Financial Inc., Inglewood, CA.
138. Blue Bell Mortgage Group LP, Blue Bell, PA.
139. Blue Cap Funding LLC, Baltimore, MD.
140. Blue Chicago Financial Corp, Chicago, IL.
141. Blue Saphire Investments, Union City, CA (Titles 1 & 2).
142. Bona Fide Mortgage Corporation, Wilmington, DE.
143. Bright Star Mortgage Company, Westchester, IL.
144. Broad Ripple Mortgage Inc., Indianapolis, IN.
145. Broad Solutions Lending LP, Plano, TX.
146. Brown and Wagner Mortgage Inc., Springfield, MO.
147. Bryco Funding Inc., San Francisco, CA.
148. Builders Mortgage LLC, Scottsdale, AZ.
149. Burton and Burton Mortgage Inc., Tallahassee, FL.
150. Bush & Hewitt Holding Inc., Temecula, CA.
151. BWM Mortgage LLC, Wauwatosa, WI.
152. C and G Financial Services Inc., Upland, CA.
153. Cal State Relocation Inc., Carmichael, CA.
154. California Funding Corp, Los Angeles, CA.
155. California Home Investments, Anaheim, CA.
156. Callycorp Financial Inc., Vancouver, WA.
157. Cambridge Financial Group LLC, Bingham Farms, MI.
158. Capital City Mortgage Incorporated, Costa Mesa, CA (Titles 1 & 2).
159. Capital Direct Financial Inc., Rancho Santa Margar, CA.
160. Capital Finance, Inc., Saint Paul, MN.
161. Capital Financial Services, Inc., Salt Lake City, UT (Titles 1 & 2).
162. Capital Home Loans Inc., Allentown, PA.
163. Capital Mortgage Corporation, East Greenwich, RI.
164. Capital Trust Mortgage & Financial Group, Atlanta, GA.
165. Capstar Mortgage Bankers Inc., Melville, NY.
166. Capstone Inc., Vancouver, WA.
167. Captus Capital Inc., Vienna, VA.
168. Cardinal Banc Mortgage Corp, Brecksville, OH.
169. Carnegie Hill Corporation, Scottsdale, AZ.
170. Casa Blanca Mortgage Inc., Woodland Hills, CA (Titles 1 & 2).
171. Cash Fast Finance LLC, Phoenix, AZ.
172. Cassius Inc., Richmond, KY.
173. CBA Commercial, LLC, Stamford, CT.
174. CBAC Funding LLC, Stamford, CT.
175. CBSK Financial Group INC, Irvine, CA (Titles 1 & 2).
176. Cedar Mortgage Company, San Jose, CA.
177. Celebrity Mortgage LLC, Parsippany, NJ (Titles 1 & 2).
178. Centennial Financial Services Inc., Wayne, NJ.
179. Centennial Mortgage and Financial Serv I, Centennial, CO.
180. Central Coast One Stop Mortgage Group Inc., Santa Maria, CA.
181. Central Fidelity Mortgage Corporation, Atlanta, GA.
182. Central Funding Inc., Duluth, GA.
183. CenTrust Bank, Deerfield, IL.
184. Century Bank NA, Dallas, TX.
185. Century Home Mortgage LLC, Southaven, MS.
186. Century Plaza Mortgage, Rowland Heights, CA.
187. Cetus Mortgage LTD, Reno, NV.
188. Challenge Financial Investors Corp, Saint Petersburg, FL.
189. Champion Lending Group, El Paso, TX.
190. Charter Mortgage Corporation, Tulsa, OK.
191. Charter West Mortgage, LLC, Grand Rapids, MN.
192. CHFS LTD, Mesquite, TX.
193. Chicago First Mortgage Inc., Chicago, IL.
194. Chicago Funding Inc., Addison, IL.
195. Chicago United Mortgage Inc., Chicago, IL.
196. Choice Bank, Scottsdale, AZ.
197. Choice Mortgage Company, Pontiac, MI.
198. Choice One Mortgage Inc., Lake Zurich, IL.
199. Citizens First Mortgage Solutions Inc., Snellville, GA.
200. Citizens State Bank, Kingsland, GA.
201. City and Suburban, FSB, Yonkers, NY.
202. City Mortgage Group Inc., Vienna, VA.
203. City National Bank, Longview, TX.
204. Cityfirst Mortgage LLC, Colorado Springs, CO.
205. Citywide Financial Group, Long Beach, CA.
206. Citywide Mortgage Corp, Landover, MD.
207. CJM Mortgage Corp, Pompton Lakes, NJ.
208. Clark Welsh Mortgage Group Inc., Indianapolis, IN.
209. Clarkston State Bank, Clarkston, MI.
210. Classic Home Mortgage LLC, Centennial, CO.
211. Classic Mortgage Funding Inc., Winter Park, FL.
212. Classic Mortgage, O Fallon, IL.
213. Clearwater Mortgage Acceptance Corp, Sebring, FL.
214. Coast 2 Coast Group Inc., Las Vegas, NV.
215. Coastal Carolina Mortgage Lenders Inc., Kinston, NC.
216. Cobb Energy Mortgage Services LLC, Marietta, GA.
217. Coldwater Canyon Capital, LLC, Broomall, PA.
218. Collateral Mortgage Corporation, Woodstock, GA.
219. Colonial Atlantic Mortgage Inc., Silver Spring, MD.
220. Colonial Credit LLC, West Warwick, RI.
221. Colonial Mortgage Lending Inc., Fort Lauderdale, FL.
222. Colorado Lending Group I LLC, Westminster, CO.
223. Colson Mortgage Company, LP, North Richland Hill, TX.
224. Community Bank Meridian MS, Meridian, MS.
225. Community Home Lending Inc., Birmingham, AL.
226. Community Home Mortgage Corp, Fort Lauderdale, FL.
227. Comparison Mortgage Inc., Redford, MI.
228. Compass Mortgage LLC, Edmonds, WA.
229. Compass Mortgage Services Inc., Boca Raton, FL.
230. Complete Mortgage Corporation, Farmington Hills, MI.
231. Construction Lending Group Inc., Ft Lauderdale, FL.
232. Consumer Credit Services Inc., Orange Park, FL.
233. Continental Mortgage Funding Corporation, Indianapolis, IN.
234. Cornerstone Mortgage Corp, Lake Oswego, OR.
235. Corporate Capital Mortgage, Inc., Copiague, NY.
236. Countryside Home Loans, Cockeysville, MD.
237. Credit Financial Services LLC, Cincinnati, OH.
238. Cresland Mortgage Co LLC, Plymouth, MN.
239. Crosscountry Home Loans Inc., Brea, CA.
240. CSM Mortgage Inc., Leawood, KS.
241. CSMG Corp, Las Vegas, NV.
242. Cumberland Bank, Franklin, TN.

243. Dalmac Mortgage Inc., Houston, TX.
244. Dana Capital Group Inc., Irvine, CA (Titles 1 & 2).
245. Del Mar Home Loans Inc., La Mesa, CA.
246. Delta Financial Corp, Oakland Park, FL.
247. Delta Home Loans Inc., Los Angeles, CA.
248. Deschutes Mortgage Group Inc., Bend, OR.
249. Desert Valley Mortgage, Saint George, UT.
250. Dewitt Mortgage Group Inc., Evansville, IN.
251. Diamond Home Mortgage Corporation, Westmont, IL.
252. Direct Financial Solutions Corp, Riverdale, NJ.
253. Direct Lending Inc., Livonia, MI.
254. Direct Loan Funding Inc., Foothill Ranch, CA.
255. Direct Mortgage Inc., Rancho Cucamonga, CA (Titles 1 & 2).
256. Discount Mortgage Finders, Fort Lauderdale, FL.
257. Discount Mortgage Lenders, Inc., Oak Brook, IL.
258. Diversified Mortgage Services, Inc., Louisville, KY.
259. Dixie Mortgage Corp., Lake Worth, FL.
260. Dollar Investment Corp., Memphis, TN.
261. Dollar Mortgage Corporation, La Mesa, CA (Titles 1 & 2).
262. Dolphin Mortgage Corporation, Lombard, IL.
263. Domus Mortgage Services, Inc., Blauvelt, NY.
264. Dougherty Mortgage, Inc., Homewood, IL.
265. Douglass Bank, Kansas City, KS (Titles 1 & 2).
266. Dream House Mortgage Corporation, Providence, RI.
267. DTR Investments, Inc., Atlanta, GA.
268. Dynamic Mortgage Bankers Ltd., Westbury, NY.
269. E Lending Corp., Cleveland, OH.
270. E Loan Mortgage Funding Corp., Parsippany, NJ.
271. Eagle Mortgage and Consultants, Inc., Lansing, IL.
272. Eagle Mortgage Brokerage, Inc., Peoria, IL.
273. Eastern American Mortgage Co., Little Falls, NJ (Titles 1 & 2).
274. Eastern Residential Mortgage LLC, Columbia, MD.
275. Efficient Lending Corp., Irvine, CA (Titles 1 & 2).
276. ELend Mortgage LLC, Houston, TX.
277. Elite Capital Management, Inc., Palos Heights, IL.
278. Elite Mortgage Company, Schaumburg, IL.
279. Elite Mortgage Group, Inc., Ridgefield, NJ.
280. E–Loan, Inc., Pleasanton, CA.
281. Elysian Mortgage LLC, Hoboken, NJ.
282. Embassy Mortgage, Inc., Silver Spring, MD.
283. Emerald Financial Group LLC, Independence, OH.
284. Emic International Corp., Dallas, TX.
285. Empire Mortgage Services II, Inc., Palm Harbor, FL.
286. Entrust Mortgage, Inc., Englewood, CO (Titles 1 & 2).
287. Equity 1 Mortgage, LLC, Brookfield, WI.
288. Esperanza Financial Services, Inc., Berwyn, IL.
289. Evergreen Mortgage Co., Inc., Smithtown, NY.
290. Evergreen Mortgage Services LLC, Canton, MI.
291. EVest Lending, Inc., Westbrook, ME.
292. Excellence Mortgage Corporation, Sandy, UT.
293. Exclusive Bancorp, Inc., Lincolnwood, IL.
294. Exclusive Home Mortgage, Inc., Kissimmee, FL.
295. Exclusive Metro Mortgage LLC, Atlanta, GA.
296. Executive Funding, Inc., Ogden, UT.
297. E–Z Mortgage Corp., Union City, NJ.
298. Fairway Mortgage Corporation, Crofton, MD.
299. Family Home Mortgage, Inc., Ligonier, PA.
300. Family Investment Mortgage, Palm Harbor, FL.
301. Familyhomeloans.Net, Inc., Laguna Hills, CA.
302. Farmers State Bank of Fulton County, Lewistown, IL.
303. Fast Track Funding Corp., Hicksville, NY.
304. Fastrack Financial LLC, Dearborn, MI.
305. FCM Corporation, Canoga Park, CA.
306. FCRMS, Inc., San Diego, CA.
307. Federalguaranty Mortgage Company, Pembroke Pines, FL.
308. FHM Mortgage Group LLC, Parsippany, NJ.
309. Fidelity Mortgage Co., Inc., West Bloomfield, MI.
310. Fidelity Mutual Mortgage, Inc., North Palm Beach, FL (Titles 1 & 2).
311. Fifth Third Bank, Cincinnati, OH.
312. Finance First Mortgage Corp., Hialeah, FL.
313. Finance Mortgage of America, Inc., Miami, FL.
314. Financial Center Mortgage and Investment, Lake Oswego, OR.
315. Financial Lending Group, Inc., Miami, FL.
316. First American Bank, Decatur, AL.
317. First Atlantic Resources Corp., Manasquan, NJ.
318. First Bank of Arizona N.A., Scottsdale, AZ.
319. First Call Mortgage Company, Andover, MA.
320. First Capital Mortgage of Central Florida, Maitland, FL.
321. First Choice Mortgage Corporation, Florence, KY.
322. First Class Financial Corporation, Southfield, MI.
323. First Commercial Bank N.A., Little Rock, AR.
324. First Countywide Mortgage Corp., Hialeah, FL (Titles 1 & 2).
325. First Discount Mortgage, Atlanta, GA.
326. First Equity Funding Corp., Lauderdale Lakes, FL.
327. First Fidelity Financial Corp., Ft. Lauderdale, FL.
328. First Fidelity Mortgage Group Ltd., Smithtown, NY.
329. First Financial Home Lending, Inc., Cincinnati, OH.
330. First Financial Lending LLC, Wauwatosa, WI.
331. First Florida International Mortgage, Kissimmee, FL.
332. First Florida State Mortgage Corporation, Melbourne, FL.
333. First Gulf Bank, Summerdale, AL.
334. First Heritage Mortgage Corp., Altamonte, FL.
335. First Home Financial Services, Inc., Chesterfield, MO.
336. First Independent Bank, Vancouver, WA.
337. First Jersey Mortgage Services, Inc., Union City, NJ.
338. First Lenders Choice Corp., Miami, FL.
339. First Madison Mortgage Corporation, Rockville, MD.
340. First Madison Services, Inc., Shelton, CT.
341. First Mortgages Lenders of Tampa Bay, Inc., Palm Harbor, FL.
342. First National Bank of Millstadt, Millstadt, IL.
343. First National Bank of Nevada, Scottsdale, AZ.
344. First National Bank, Christiansburg, VA.
345. First National Mortgage Bank, Inc., Dayton, OH.
346. First Option Mortgage, Inc., Roseville, CA.
347. First Pacific Funding Corporation, Upland, CA.
348. First Premier Finance LLC, Branson, MO.
349. First Priority Mortgage, Inc., Norcross, GA.

350. First Quest Financial Corp., North Wales, PA.
351. First Quest Financial, Inc., Santa Ana, CA.
352. First Rate Mortgage Co., Fraser, MI.
353. First Southern Mortgage Company, Inc., Mobile, AL.
354. First State Home Loan Ltd., Austin, TX.
355. First State Mortgage Company, Longwood, FL.
356. First Street Financial, Inc., Irvine, CA.
357. First Suburban Mortgage Corp., Riverside, IL.
358. First Trade Union Savings Bank FSB, Boston, MA.
359. First United Mortgage Banking Corp., Jericho, NY.
360. First Universal Financial, Inc., Reno, NV.
361. Firstcity Bank, Stockbridge, GA.
362. Five Star Mortgage Services, Inc., Jacksonville, FL (Titles 1 & 2).
363. Fixed Rate Holdings, Inc., Lake Forest, CA.
364. Florida Atlantic Mortgage Corp., Inc., Margate, FL.
365. Florida Business Finance Corp., Jacksonville, FL (Titles 1 & 2).
366. Florida Living Mortgage Group Corp., Orlando, FL.
367. Florida's Best Home Mortgages, Inc., Parkland, FL.
368. Floridian Bank, Daytona Beach, FL.
369. Focus Financial LP, Ogden, UT.
370. Ford Financial LLC, Somerville, NJ.
371. Foremost Mortgage Associates, Inc., Cranston, RI.
372. Fort Knox National Bank, Elizabethtown, KY.
373. Four Corners Realty Financial, Irvine, CA.
374. Franale LLC, Houston, TX.
375. Franklin Bank SSB, Houston, TX.
376. Freedom Bank of Georgia, Commerce, GA.
377. Freedom Home Mortgage Corp., Wayne, NJ.
378. Freedom Homes, Inc., Oklahoma City, OK.
379. Freedom Mortgage Team, Inc., Oakbrook Terrace, IL.
380. FSM Holding Corp., San Diego, CA.
381. Full Circle Financial LLC, Kent, WA.
382. Funded Capital Mortgage, Inc., Beverly Hills, CA.
383. Funding Mortgage Ltd., Chicago, IL.
384. Future Financial LLC, Oakbrook Terrace, IL.
385. G and G Financial Network, Inc., Fort Collins, CO.
386. G.M.C. Financial Corporation, Phoenix, AZ.
387. Gateway Home Loans LLC, Glastonbury, CT.
388. Gateway Mortgage Lending, Inc., Clive, IA.
389. GB&T Bancshares, Inc., Cumming, GA.
390. Generation V, Inc., Greenwood Village, CO.
391. Genesis Financial Group LLC, Smyrna, TN (Titles 1 & 2).
392. Geneva Mortgage Corp., Rockville Centre, NY.
393. Georgia Mortgage Consultants, Inc., Acworth, GA.
394. GFTR Holdings, Inc., Atlanta, GA.
395. Gibraltar Mortgage Corporation, East Lansing, MI.
396. Gibraltar Mortgage Loans & Investment Inc., Hudson, FL.
397. Global Equity Lending, Inc., Johns Creek, GA.
398. Globe Mortgage Network, Inc., Boca Raton, FL.
399. GMAC Mortgage USA Corporation, Kailua, HI.
400. Go Financial Group, Inc., Greenbelt, MD.
401. Gold Coast Mortgage LLC, Northfield, NJ.
402. Gold Mortgage Banc, Inc., Olathe, KS.
403. Golf Crest Mortgage, Inc., Tampa, FL.
404. Goodman Financial Institute of America, St. Petersburg, FL.
405. Grand Central Mortgage Corp., Birmingham, AL.
406. Grand Mortgage Corporation, Palatine, IL.
407. Great New England Mortgage Co., Inc., North Attleboro, MA.
408. Greater Northwest Mortgage, Inc., Clackamas, OR.
409. Greater United Home Funding, Inc., Orlando, FL.
410. Green Pastures Mortgage & Finance Co. LLC, Lutherville, MD.
411. Greylock Federal Credit Union, Pittsfield, MA.
412. Gulf Coast Mortgage Financial Services I, Fort Myers, FL.
413. Habitat Mortgage Company, Inc., Westlake, OH.
414. Hamilton Mortgage Company, Phoenix, AZ.
415. Hammersmith Financial Corp., Inc., Houston, TX.
416. Heartwell Mortgage Corporation, Grand Rapids, MI.
417. Heavensent Financial Group, Inc., Houston, TX.
418. Heritage Mortgage Corp. of Southwest Florida, Port Charlotte, FL.
419. Heritage Mortgage LLC, Manassas, VA.
420. HMS Capital, Inc., Westlake Village, CA.
421. Hollywood Mortgage Corporation, Miramar, FL.
422. Home America Mortgage, Inc., Lawrenceville, GA.
423. Home Capital Funding, San Diego, CA.
424. Home Capital, Inc., Atlanta, GA.
425. Home Center Mortgage, Norco, CA.
426. Home Equity Mortgage Corporation, Miami, FL.
427. Home Equity Store, Inc., Draper, UT.
428. Home Financial Services, Inc., Mineola, NY.
429. Home First Funding LLC, Winter Park, FL.
430. Home First Mortgage, Inc., Saint Louis, MO.
431. Home Loan Funding, Inc., Irvine, CA.
432. Home Mortgage Finance Group Corp., Cutler Bay, FL.
433. Home Mortgage Solutions, Inc., Greenwood Village, CO.
434. Home Mortgage, Inc., Burr Ridge, IL.
435. Home One Mortgage, LLC, Largo, MD.
436. Home Savings Mortgage, Calabasas, CA.
437. Home Source Mortgage LLC, Boise, ID.
438. Home Star Mortgage Corp., Merrick, NY.
439. Homefield Financial, Inc., Irvine, CA (Titles 1 & 2).
440. Homelenders Financial Services, Inc., Tempe, AZ.
441. Homeowners Friend Mortgage Company, Inc., Orange, CA.
442. HomeQuest Mortgage Corp., Lombard, IL.
443. Homes and Loans, Inc., Sacramento, CA.
444. Homesamerica Mortgage Service, Inc., Miami, FL.
445. HomeSouth Mortgage Corporation, Jacksonville, FL.
446. Homestead Mortgage Corporation, Schaumburg, IL.
447. Horizon Direct, Inc., Agoura Hills, CA.
448. Horizon Financial Corporation, Fairfield, NJ.
449. Howe Lagrange Mortgage Co., Inc., Lagrange, IN.
450. I F Key Holdings, Inc., Orange, CA.
451. I M Navarro Corporation, Riverside, CA.
452. Icon Financial Group, Inc., Berkley, MI.
453. Imperial Mortgage Company LLC, Birmingham, AL.
454. Infinity Mortgage Service, Inc., Southfield, MI.
455. Innovative Solutions Treasure Coast, Inc., Fort Pierce, FL.
456. Instant Capital Funding Group, Inc., Orange, CA.

457. Integra Funding Group, Inc., Murrieta, CA (Titles 1 & 2).
458. Integrated Finance Services LLC, Hamden, CT.
459. Integrity Bancorp, Temecula, CA.
460. Integrity Financial Services, Oak Brook, IL (Titles 1 & 2).
461. Intercoastal Funding Corp., Fountain Valley, CA.
462. Intercontinental Mortgage Partners LP, Houston, TX.
463. Inter-Galactic Mortgage Corp., Los Angeles, CA.
464. Intermountain Financial LLC, Midvale, UT.
465. International Mortgage Lenders, Inc., Louisville, KY.
466. International Mortgage Services, Spring Lake, NJ.
467. Investors Savings Bank, Millburn, NJ.
468. Ires Co., Fountain Valley, CA.
469. Ironwood Lending, Inc., Phoenix, AZ.
470. IVC Mortgage Group, Inc., Des Plaines, IL.
471. J & L Realty Group, Inc., Elk Grove, CA.
472. J & S Development Group, Inc., St. Petersburg, FL.
473. J D Myers Financial, Inc., Lake Stevens, WA.
474. Jarvis Street Mortgage Providers, Inc., Dawsonville, GA.
475. JC Reed Mortgage, LLC, Franklin, TN (Titles 1 & 2).
476. JDB Mortgage, Inc., Burnsville, MN.
477. Jefferson Independent Mortgage, Dallas, TX.
478. Jett Financial Services, Inc., San Diego, CA.
479. Joma Shipping and Chartering Ltd., Southfield, MI.
480. Kaiser and Associates Mortgage Services, Inc., Louisville, KY.
481. Kase Mortgage Banc, Inc., Elgin, IL.
482. Kay Co. Investments, Inc., Novato, CA.
483. KC Mortgage Group, Inc., Kansas City, MO (Titles 1 & 2).
484. Kemper Mortgage, Inc., Miamisburg, OH.
485. Key Mortgage Brokers, Inc., Fort Myers, FL.
486. Killion Enterprises, Inc., Portland, OR.
487. Kinetic Mortgage Group, Inc., Doral, FL.
488. King Mortgage Corp., Wayne, NJ.
489. Kirkwood Financial Corporation, Victorville, CA.
490. Koala Equity Group, Inc., Hollywood, FL (Titles 1 & 2).
491. Kramer Mortgage Company LLC, West Des Moines, IA.
492. Kulman, Inc., Walnut Creek, CA.
493. L.S.M.C. Inc., Kansas City, MO.
494. La Junta State Bank and Trust, La Junta, CO.
495. Lakeshore Funding, Inc., Chicago, IL.
496. Lakeside Funding, Inc., Northbrook, IL.
497. LandAmerica Home Loans, Inc., Coral Gables, FL.
498. Laredo National Bank, Laredo, TX.
499. LaSalle Bank Midwest National Association, Troy, MI (Titles 1 & 2).
500. Latino Home Loans, Inc., Tampa, FL.
501. Leahy Mortgage, Inc., Lakeland, FL.
502. Leblond Federal Credit Union, Cincinnati, OH.
503. Legacy Financial Services, Inc., Batesville, IN.
504. Legacy Lenders Group LLC, Topeka, KS (Titles 1 & 2).
505. Legacy Mortgage, Inc., Springfield, NJ.
506. Lender Ltd, South Lyon, MI.
507. Lenders Rate Approval-Com Corp., Irvine, CA.
508. Lending Group, Inc., Jacksonville, FL.
509. Lending.com, Inc., Dallas, TX.
510. Liberty Financial Group, Inc., St Petersburg, FL.
511. Liberty Funding Services, Cedar Knolls, NJ.
512. Liberty Lending Incorporated, Santa Monica, CA.
513. Liberty Mortgage Group, Inc., Saint George, UT (Titles 1 & 2).
514. Liberty Mortgage LLC, Jersey City, NJ.
515. Liberty Mortgage, Inc., Jacksonville, FL.
516. Liberty One Lending, Inc., Goodyear, AZ.
517. Lifestyle Mortgage II LLC, San Antonio, TX.
518. Lighthouse Mortgage Advisers LLC, Everett, MA.
519. Lighthouse Mortgage Corporation, Fort Myers, FL.
520. Lighthouse Point Lending LLC, Ellington, CT.
521. Lime Financial Services Ltd., Lake Oswego, OR (Titles 1 & 2).
522. Lincoln Lending Services LLC, Miami, FL.
523. Lincoln Mortgage Financial Services, Inc., Clinton, TN (Titles 1 & 2).
524. Linden Residential Credit Corp., Ronkonkoma, NY.
525. Link One Mortgage Bankers LLC, Jericho, NY.
526. LMC Mortgage, Chicago, IL.
527. Loan America, Inc., Alpharetta, GA.
528. Loan Emporium, Inc., Norco, CA.
529. LoanAmerica Home Mortgage, Inc., Houston, TX (Titles 1 & 2).
530. Loanchoice, Inc., Miami, FL.
531. Loanscapes LLC, St. Louis, MO.
532. Loanstar Mortgage and Investments Corp., Tamarac, FL.
533. Louisiana Real Estate Finance LLC, Baton Rouge, LA.
534. LTL Financial Services, Inc., Frankfort, IL.
535. Luxor Investment Group, Inc., Bell Gardens, CA.
536. M and A Mortgage, Inc., Orange, CA.
537. M and R Mortgage Solutions, Chicago, IL.
538. Madison Mortgage Corporation, Smyrna, GA.
539. MAG Financial Group, Inc., Monrovia, CA.
540. Magna Mortgage and Investments, Clearwater, FL.
541. Magnolia Mortgage Company LLC, Montgomery, AL.
542. Main Street Bank, Northville, MI.
543. Maksor Management Group LLC, Wyoming, MI (Titles 1 & 2).
544. Maranatha Mortgage Corp., Algonquin, IL.
545. Mariners Capital, Inc., Newport Beach, CA.
546. Market Capitol Group, Edmond, OK.
547. Market Mortgage Corp., Oak Brook, IL.
548. Mass Mortgage, Inc., West Palm Beach, FL.
549. Mayberry Financial Corporation, Portland, ME.
550. Mayflower Home Loans, Inc., Milford, OH.
551. MBA Financial Solutions, Forest Hill, MD.
552. MCIG Capital Corporation, Ontario, CA.
553. Mendaros Family Corp., Pleasanton, CA.
554. Mercantile Mortgage Company, Westerville, OH.
555. Mercantile Mortgage Corp., Baltimore, MD.
556. Meridian Bank, Alton, IL.
557. Meridian Lending, Inc., Monroe, GA.
558. Metro East Mortgage Corp., Saint Louis, MO.
559. Metro Funding Corp., Miami, FL.
560. Metroplex City Mortgage LLC, Carrollton, TX.
561. Metropolitan Mortgage Bankers, Inc., Silver Spring, MD.
562. Metropolitan Mortgage Services, Cliffside Park, NJ.
563. Miami Valley Bank, Lakeview, OH.
564. Mid Atlantic Mortgage Group LLC, Pasadena, MD.
565. Midland Mortgage Corp., Rockford, IL.
566. Midwest Mortgage Consultants LLC, St Louis, MO (Titles 1 & 2).
567. Midwest One Mortgage Services, Inc., Evansville, IN.

568. Midwest Residential Lending LLC, Tipp City, OH.
569. Mila, Inc., Mountlake Terrace, WA.
570. Millenium Mortgage Investors Corp., Miami, FL.
571. Mills County State Bank, Glenwood, IA.
572. Minnesota Home Mortgage Corp., Saint Paul, MN.
573. Mission Mortgage, LLC, Overland Park, KS.
574. MLSG, Inc., Reno, NV (Titles 1 & 2).
575. Monarch Mortgage Co., Inc., Tucker, GA.
576. Money First Financial Services, Inc., Las Vegas, NV.
577. Money Source, Inc., Marietta, GA.
578. Moneylink Mortgage, Inc., Montebello, CA.
579. Moneywise Home Loans LLC, Lombard, IL.
580. Monument Capital LLC, Hazelwood, MO (Titles 1 & 2).
581. Morgan Funding Corp., Jersey City, NJ.
582. Morning Star Mortgage Group, Inc., Palm Bay, FL.
583. Mortgage Acceptance Corp., Austin, TX.
584. Mortgage Amenities Corp., Lincoln, RI.
585. Mortgage Approval Company LLC, Florence, KY.
586. Mortgage Broker Associates, Inc., Lynnwood, WA.
587. Mortgage Center of America, Inc., Walnut Creek, CA.
588. Mortgage Consultant and Co, Fairfield, NJ.
589. Mortgage Depot LLP, Nashville, TN.
590. Mortgage Discounters, Inc., Annandale, VA.
591. Mortgage Division, Inc., Conyers, GA.
592. Mortgage Experts, Inc., Moreno Valley, CA.
593. Mortgage Express, Inc., Roslindale, MA.
594. Mortgage Finance Corporation, Wolcott, CT.
595. Mortgage First Limited LLC, Mount Prospect, IL.
596. Mortgage Florida LC, Orlando, FL.
597. Mortgage Funding Solutions LLC, West Deptford, NJ.
598. Mortgage Industry, Inc., Angelton, TX.
599. Mortgage Institute Michigan, Southfield, MI.
600. Mortgage Mart, Inc., Joliet, IL.
601. Mortgage Network of America, Beachwood, OH.
602. Mortgage One Lending, San Diego, CA.
603. Mortgage Planners LLC, Clearwater, FL.
604. Mortgage Resource Group, Inc., Eugene, OR.
605. Mortgage Resource, Inc., Rochelle Park, NJ.
606. Mortgage Resources, Inc., Jacksonville, FL.
607. Mortgage Results Corporation, Norwood, MA.
608. Mortgage Services Bancorp, Bloomingdale, IL.
609. Mortgage Services Group LLC, Springfield, MO.
610. Mortgage Solutions Services, Inc., Brentwood, TN.
611. Mortgage Source, Inc., Las Vegas, NV.
612. Mortgage Sphere, Inc., Northbrook, IL.
613. Mortgage Town, Inc., Trussville, AL.
614. Mortgages First Real Estate Services, League City, TX.
615. MTS Financial LLC, Douglasville, GA.
616. Multi-Fund of Columbus, Inc., North Olmsted, OH.
617. Multi-Source Financial Investments, Inc., Richardson, TX.
618. Mutual Mortgage Corp., Farmington, MI.
619. Nations First Mortgage Banc, Inc., Dayton, OH.
620. Nations Wholesale Lending Group, Inc., Delray Beach, FL.
621. Nationwide Lending Corporation, Irvine, CA (Titles 1 & 2).
622. NBGI, Inc., Los Angeles, CA.
623. Net Trust Mortgage LLC, Boca Raton, FL.
624. Netbank, Coeur d'Alene, ID.
625. Nevis Funding Corporation, Woodland Hills, CA.
626. New Day Trust Mortgage, Irvine, CA.
627. New England Home Mortgage LLC, South Portland, ME.
628. New Equity Financial Corp., Louisville, KY.
629. New Heights Mortgage Co LLC, Little Rock, AR.
630. New Liberty Home Loans LLC, Duluth, GA.
631. New Liberty Mortgage, Glendale Heights, IL.
632. New Millennium Mortgage Group Corp., Chicago, IL.
633. New Millennium Mortgage, Naperville, IL.
634. New World Mortgage, Inc., Murrieta, CA.
635. New York Capital Exchange Corp., Garden City, NY.
636. Newbury Mortgage America Ltd, Takoma Park, MD.
637. Newcastle Mortgage Corporation, Saint Louis, MO.
638. Newkey Financial Corporation, Huntington Beach, CA.
639. NFC Wholesale LLC, Phoenix, AZ.
640. NHI Home Mortgage LLC, Federal Way, WA.
641. Nivek Funding Group, Inc., Glens Falls, NY.
642. Northern Mortgage Services LLC, Southborough, MA.
643. Northwoods Lending LLC, Brookfield, WI.
644. Noskey Mortgage Corporation, Brandon, FL.
645. Novella Garcia Real Estate, Inc., Rio Linda, CA.
646. NV. Mortgage, Inc., Henderson, NV.
647. OCM Mortgage, Inc., Overland Park, KS.
648. Ohio Mortgage Associates LLC, Englewood, OH.
649. Ok Corral Mortgage, Inc., Irvine, CA.
650. Olympiawest Mortgage Group LLC, Vienna, VA.
651. Omni Capital Group LLC, Centennial, CO (Titles 1 & 2).
652. Omni Capital, LLC, Henderson, NV.
653. One Source Federal Credit Union, El Paso, TX.
654. One World Mortgage Corporation, Duluth, GA.
655. Originate Home Loans, Inc., Westmont, IL.
656. Outlook Mortgage LLC, Bellaire, TX.
657. P and C Enterprises of Orlando, Inc., Orlando, FL.
658. P D Q Corp., Morris Plains, NJ.
659. Pacific Shore Funding, Laguna Hills, CA (Titles 1 & 2).
660. Pacific Western Real Estate Services, Inc., Laguna Hills, CA.
661. Pacific Wholesale Mortgage, Inc., Pasadena, CA.
662. Palace Funding Corporation, Frankfort, IL.
663. Pan American Finance Corp., Los Angeles, CA.
664. Paragon Home Lending LLC, Brookfield, WI.
665. Paramount Financial, Inc., Longwood, FL.
666. Park Place Financial LLC, Redmond, WA.
667. Pathway Financial LLC, Southfield, MI.
668. Patriot Mortgage Company, Inc., Altamonte Springs, FL.
669. Peace of Mind Mortgage, LLC, Phoenix, AZ.
670. Peach City Mortgage, Inc., Stockbridge, GA.
671. People's Choice Mortgage and Loan Corp., Deerfield Beach, FL.
672. Peoples Home Mortgage, Inc., Loxahatchee, FL.
673. Performance Mortgage, Inc., Englewood, FL.

674. Personal Home Mortgage Services, Inc., Crystal City, MO.
675. Pierce Mortage, Inc., Tacoma, WA.
676. Pines Mortgage Services, Inc., Pembroke Pines, FL.
677. Pinnacle Direct Funding Corporation, Orlando, FL.
678. Pinnacle Mortgage Corporation, Tulsa, OK.
679. Pinnacle Premier Home Mortgage LLC, Tucson, AZ.
680. Platinum Brokers, Inc., Lutz, FL.
681. Platinum Capital Group, Irvine, CA.
682. PMA Lending LLC, Woodbridge, NJ.
683. Point Financial, Inc., Brandon, FL.
684. Prajna Group, Inc., Louisville, KY.
685. Preferred Financial Group, Inc., Burlingame, CA.
686. Premier Choice Mortgage LLC, Atlanta, GA.
687. Premier Financial Credit Union, Clinton Township, MI.
688. Premier Financial Network, Inc., Huntington Beach, CA.
689. Premier Home Loans, Stockton, CA.
690. Premier Mortgage Capital, Orlando, FL.
691. Premiere Service Mortgage Corp., West Chester, OH.
692. Premium Mortgage, Inc., Blue Springs, MO.
693. Present Mortgage, Inc., Doral, FL.
694. Prestige Mortgage Group, Inc., Denver, CO.
695. Pride Mortgage LLP, Middletown, RI.
696. Prime Lending Group, Inc., Macon, GA.
697. Primeaxia Financial, Inc., San Antonio, TX.
698. Primekey Mortgage LLC, Baton Rouge, LA.
699. Principal Lending, Inc., West Paterson, NJ.
700. Priority Financial Inc., San Ramon, CA.
701. PRMS Enterprises, Inc., Murrieta, CA.
702. Pro Mortgage Group, Inc., Hialeah, FL.
703. Professional Mortgage Bankers, Lutherville, MD.
704. Professional Mortgage Partners, Inc., Downers Grove, IL.
705. Progress Bank of Missouri, Sullivan, MO.
706. Prominent Mortgage Corporation, Bellflower, CA.
707. Prospect Mortgage Group LLC, Indianapolis, IN.
708. Prosperity Home Loans, Inc., Memphis, TN.
709. Prudential Lending, Inc., Huntington Beach, CA.
710. PTF Financial Corp., Englewood, CO.
711. Public Bank, Saint Cloud, FL.
712. Public Trust Mortgage Corporation, Fort Myers, FL.
713. Pueblo Bank and Trust Company, Pueblo, CO.
714. Puget Sound Mortgage, Inc., Edmonds, WA.
715. Q Financial Direct, Inc., Doral, FL (Titles 1 & 2).
716. Qualia Services, Inc., Orange Park, FL.
717. Quality 1st Lending LLC, Farmington Hills, MI.
718. Questar Capital Funding, LLC, Tampa, FL.
719. Quick Loan Funding, Inc., Costa Mesa, CA.
720. RCW Mortgage, LLC, Louisville, KY.
721. Real Mortgage and Investments, Inc., Tampa, FL.
722. Real Mortgage Corporation, Chicago, IL.
723. Realty Mortgage Corporation, Flood, MS.
724. Refinance Company, Indianapolis, IN.
725. Regional Mortgage Programs, Inc., Cranston, RI.
726. Reliable Mortgage Bankers Corporation, New Hyde Park, NY.
727. Renovation Mortgage plus LLC, Alpharetta, GA.
728. Residential Loan Centers of America, Des Plaines, IL.
729. Residential Mortgage Capital, San Rafael, CA.
730. Residential Mortgage Experts, Crystal Lake, IL.
731. Response Mortgage Services, Inc., Bellevue, WA.
732. Reverse Equity Advisors, Inc., St. Petersburg, FL.
733. Reverse Ultra, Inc., Dania Beach, FL.
734. RG Mortgage Corporation, Homewood, IL.
735. Richland Mortgage Company LLC, Scottsdale, AZ.
736. RKS Financial Services, Inc., Henderson, NV.
737. RM Financial, Inc., Austin, TX.
738. RML Associates, Inc., Fairfield, NJ.
739. RNB, Inc., Las Vegas, NV.
740. Robert Marin Realty, Inc., Montclair, CA.
741. RTL Financial, Inc., Bellevue, WA.
742. Sage Credit Company, Inc., Irvine, CA.
743. Salem Lending & Mortgage, Houston, TX.
744. Sara Financial, Inc., La Puente, CA.
745. Saugus Federal Credit Union, Saugus, MA.
746. Savings Mortgage, Inc., Cherry Hill, NJ.
747. Sawgrass Funding LLC, Coral Springs, FL.
748. SCME Mortgage Bankers, Inc., San Diego, CA.
749. SE Metro Mortgage, Inc., Atlanta, GA.
750. Secured Lending Realty, Inc., Tarzana, CA.
751. Sellers Financial Group, Inc., Nashville, TN.
752. Seminole Lending, Inc., Kennesaw, GA.
753. Seton Capital Group, Inc., Scottsdale, AZ.
754. Shamrock Bancorp, Inc., Downers Grove, IL.
755. Shoshone First Bank, Cody, WY.
756. Signature Funding, Inc., San Diego, CA.
757. Silver State Bank, Henderson, NV.
758. Silverstone Mortgage, Byram, MS.
759. Skorp, Inc., Las Vegas, NV.
760. Sloan Mortgage Group, Inc., Maitland, FL.
761. Smart Properties, Inc., Naples, FL.
762. Solutions Lending LLC, Fishers, IN.
763. Sonora Mortgage, Inc., Phoenix, AZ.
764. Sonrise Mortgage LLC, Sparks, MD.
765. Sound Mortgage Solutions, Inc., Jacksonville, FL.
766. South Coast Reverse Mortgage, Inc., Laguna Hills, CA.
767. South Holland Mortgage Group, South Holland, IL.
768. South Lake Mortgage Capital, Inc., Laguna Hills, CA.
769. South Trust Funding, Inc., Valrico, FL.
770. Southern Home Mortgage, Inc., Grapevine, TX.
771. Southern Horizon Financial Group LLC, Acworth, GA.
772. Southern Star Mortgage Corp., East Meadow, NY. (Titles 1 & 2).
773. Southern Unity Mortgage, Birmingham, AL.
774. Southstate Mortgage Corp., Orlando, FL.
775. Southwest Mortgage Corp., Overland Park, KS.
776. Spectrum Financial Group, Scottsdale, AZ.
777. Spectrum Funding Corporation, Salt Lake City, UT.
778. Spectrum Hale Partners LLC, Scottsdale, AZ.
779. Standard Home Mortgage, Inc., Grosse Pointe Farms, MI.
780. State Lending Corporation, Miami, FL.
781. Stonebriar Mortgage Corporation, Dallas, TX.

782. Stonecreek Funding Corp., Denver, CO.
783. Strategic Mortgage Corporation, Walnut, CA.
784. Stratford Funding, Inc., Southfield, MI.
785. Streamline Holding LLC, Naples, FL.
786. Summit Lending Solutions, Inc., Escondido, CA.
787. Summit Mortgage Company of the Bluegrass, Lexington, KY.
788. Summit Mortgage LLC, Wakefield, MA.
789. Summit Mortgage of America Corp., Brighton, MI.
790. Sun Beam Mortgage Corp., Clearwater, FL.
791. SunCoast Residential Lending LLC, Fort Myers, FL.
792. Sunpoint Corporation, Las Vegas, NV.
793. Sunrise Financial Services, Inc., Pipersville, PA.
794. Sunset Lending Group, Inc., Miami, FL.
795. Sunshine Mortgage Corp., Smyrna, GA.
796. Superior Estates Corp., Las Vegas, NV.
797. Superior Funding Group Corporation, Lake Worth, FL.
798. Surecredit USA Home Loans, Inc., Miami, FL.
799. Swash Bucklers Cove LLC, West Linn, OR.
800. Synergy Mortgage Solutions, LLC, Tucker, GA.
801. Syracuse Cooperative Federal C U, Syracuse, NY.
802. Tayllon Mortgage Corporation, Las Vegas, NV.
803. TCF National Bank, Livonia, MI.
804. TCS Mortgage, Inc., San Diego, CA.
805. Team One Lending, Inc., Wellington, FL.
806. Texas Mortgage Services, Inc., Colleyville, TX.
807. The Community Bank, Loganville, GA.
808. The Lending Exchange, Inc., Homewood, IL.
809. The Loan Experts, Saratoga, CA.
810. The Loan Source, Inc., Atlanta, GA.
811. The Money Tree Financial Corp., Irwin, PA.
812. The Mortgage Center of Volusia County In, Ormond Beach, FL.
813. The Mortgage Exchange, Chicago, IL.
814. The Mortgage Funding Group, Inc., Temple Hills, MD.
815. The Mortgage Locator LLC, Stone Mountain, GA.
816. The Mortgage Store, Inc., Wentzville, MO
817. The Rock Mortgage, Inc., Dallas, TX.
818. The Signature Bank, Springfield, MO.
819. The Watermark Group, Inc., Portland, OR.
820. Theo-Vision LLC, Houston, TX.
821. Thornapple Mortgage Co LLC, Caledonia, MI.
822. Thumb Butte Mortgage, Inc., Prescott, AZ.
823. Timberland Mortgage Services, Inc., Apple Valley, MN.
824. TNN Financial, Inc., Fairlawn, OH.
825. Toos, Inc., Newport Beach, CA.
826. Top Choice Mortgage Co, North Miami, FL.
827. Top Mortgage Bankers Corp., Bellingham, WA.
828. Total Care Mortgage, Inc., Jacksonville, FL.
829. Total Home Source, Inc., Brandon, FL.
830. Touchstone Mortgage Company, Portland, OR.
831. Tower Mortgage Capital, Inc., Rancho Cucamonga, CA (Titles 1 & 2).
832. TPI Mortgage, Inc., Herndon, VA.
833. Tricounty Mortgage, Inc., Riverside, CA.
834. Triple Crown, Inc., Paris, KY.
835. Triton Financial Group LLC, Beachwood, OH.
836. Trivantage Bancorp LLC, St. Petersburg, FL.
837. Trust Capital Mortgage, Inc., Boca Raton, FL (Titles 1 & 2).
838. Trust One Mortgage Corporation, Oak Brook, IL.
839. Tuscany Financial, Inc., Aspinwall, PA.
840. TWG Investments, Inc., Rancho Cucamonga, CA.
841. U S Mortgage Holdings AZ, LLC, Phoenix, AZ (Titles 1 & 2).
842. Unimac Financial Services, Burlingame, CA.
843. Union Centre Mortgage LLC, Lebanon, OH.
844. Union Equity Mortgage LLC, Benton, AR.
845. Union Home Mortgage LLC, Shawnee, KS.
846. United Americas Bank, Atlanta, GA.
847. United California Systems, Los Angeles, CA.
848. United Capital Mortgage of Ohio, Inc., Cincinnati, OH.
849. United Consumer Mortgage, Inc., Chicago, IL.
850. United Equity LLC, Baltimore, MD.
851. United Mortgage and Associates Ltd, Ocala, FL.
852. United Mortgage Corporation, Cape Coral, FL.
853. United Prairie Bank-New Ulm, New Ulm, MN.
854. United Prestige Mortgage LLC, Hoboken, NJ.
855. Universal Home Lending, Inc., Eastpointe, MI.
856. Universal Home Loan Corp. of America LLC, Lewisville, TX.
857. Universal Mortgage Consultants, Inc., Park Ridge, IL.
858. Universal Savings Bank, Milwaukee, WI.
859. Unlimited Mortgage, Inc., Goshen, IN.
860. US Equity Mortgage LLC, Louisville, KY.
861. US Mortgage & Investment Services, Inc., Rockville, MD.
862. US Mortgage and Investments, Inc., North Little Rock, AR.
863. USA Home Finance.Com, Inc., North Miami, FL.
864. USA Home Mortgage Corp., Elmhurst, IL.
865. USA Mortgage Gold of FL, Inc., Naples, FL.
866. USMoney Source, Inc., Atlanta, GA (Titles 1 & 2).
867. Value One Mortgage Corp., Randolph, MA.
868. Vega Financial, Las Vegas, NV.
869. Ventura Mortgage, LLC, Fort Myers, FL.
870. Verizon Financial LLC, Canton, MI.
871. Victory Mortgage LLC, Kansas City, MO.
872. Viewpoint Lending, Inc., Marysville, WA.
873. VM Lending LLC, Alpharetta, GA.
874. Washington Capital Advisors, Inc., Los Alamitos, CA.
875. Washington Mutual Bank FA, Bethel Park, PA.
876. Washington Mutual Bank FSB, Irvine, CA.
877. Watermark Lending LLC, Fort Myers, FL.
878. We Do Home Loans, Inc., Tampa, FL.
879. Wendover Financial Services Corp., Greensboro, NC.
880. Western Bank Cheyenne, Cheyenne, WY.
881. Western States Mortgage Corp., Bellevue, WA.
882. Western States Mortgage Group, Inc., Colorado Springs, CO.
883. Westlantic Financial Group, Inc., Ft. Lauderdale, FL.
884. Westside Mortgage Corporation, Grand Rapids, MI.
885. White Sands Mortgage, Inc., McComb, MS.
886. Wholesale America Mortgage, Inc., Pleasanton, CA (Titles 1 & 2).
887. Wholesale Mortgage Lending LLC, Centennial, CO.
888. Winged Foot Financial Group LLC, Red Bank, NJ.
889. Wisconsin Home Lending, Inc., Waukesha, WI.

890. WK Financial Services, Inc., Victorville, CA.
891. WLT Capital Corp., Tucson, AZ.
892. Woodbine Mortgage Corp., Longview, TX.
893. Workingmans Mortgage, Inc., Raleigh, NC.
894. World Group Mortgage LLC, Cornelius, NC (Titles 1 & 2).
895. World Mortgage Corporation of Miami, Doral, FL.
896. Worldwide Financial Resources, Inc., Morganville, NJ.
897. Worth National Bank, Inc., Benbrook, TX.
898. Wow Financial LLC, Conshohocken, PA.
899. Wyndham Financial Services, Inc., Plano, TX.
900. Yavel Lending, Inc., West Palm Beach, FL.
901. You're Finance Source, A Florida Limited Partnership, Ocala, FL.
902. Your Best Rate Financial LLC, Atlanta, GA.
903. Your Home Loan Solution Team LLC, Phoenix, AZ (Titles 1 & 2).
904. Zino Financial, Inc., Concord, CA.
905. Zion Mortgage Solution Incorporated, Marion, IN.

III. Lenders That Failed to Timely Meet Requirements for Annual Recertification of HUD/FHA Approval, But Have Cured

Action: The Board voted to give the lenders below an opportunity to settle the matter. The settlement required each lender to pay a $3,500 civil money penalty without admitting fault or liability.

Cause: The Board took this action because the lenders failed to timely comply with the Department's annual recertification requirements, but are now in compliance.

1. 1st Alliance Banc Corp, Chicago, IL, 09–9044–MR.
2. Aarow Mortgage, Laurel, MD, 09–9053–MR.
3. Acme Amalgamated Enterprises d/b/a Prime Mortgage, Austin, TX, 10–1643–MRT.
4. Albina Community Bank, Portland, OR, 09–9231–MR.
5. All American Home Mortgages LLC, Henderson, NV, 09–9764–MR.
6. All Peoples Financial LLC, Edison, NJ, 10–1647–MRT.
7. Allied Credit Union, Houston, TX, 09–9178–MR.
8. Amber Financial Group, San Diego, CA, 09–9177–MR.
9. American Momentum Bank, Tampa, FL, 09–9122–MR.
10. American Mortgage Services, Melrose, MA, 09–9021–MR.
11. Amerilending, Miami, FL, 09–9005–MR.
12. Amston Mortgage Company, Inc., Moodus, CT, 09–9288–MR.
13. Amwest Capital Mortgage Inc., Escondido, CA, 08–8060–MR.
14. Atlantis Mortgage Co., Inc., Eatontown, NJ, 10–1654–MRT.
15. Avanta Federal Credit Union, Billings, MT, 10–1655–MRT.
16. Bank of Tucson, Tucson, AZ, 09–9295–MR.
17. Baytree Lending Company, Milwaukee, WI, 10–1656–MRT.
18. Beacon Financial Group Inc., Melbourne, FL, 09–9282–MR.
19. Benchmark Mortgage LLC, Cordova, TN, 10–1658–MRT.
20. Best Mortgage Services, LLC, Detroit, MI, 09–9521–MR.
21. Blue Eagle Corporation, Elgin, IL, 09–9201–MR.
22. Bogman, Inc., Silver Spring, MD, 09–9095–MR.
23. Bridgeview Mortgage Corp., Franklin Square, NY, 10–1659–MRT.
24. C&A Financial Enterprises, Inc., Macon, GA, 09–9347–MR.
25. Capital Access Mortgage, Denver, CO, 09–9351–MR.
26. Carrollton Mortgage Co., Modesto, CA, 09–9523–MR.
27. Casa Mortgage Corp., Fort Lauderdale, FL, 10–1660–MRT.
28. Cascade Northern Mortgage Inc., Vancouver, WA, 09–9439–MR.
29. Centerline Capital Group, New York, NY, 09–9160–MR.
30. Central Kentucky Federal Savings Bank, Danville, KY, 09–9299–MR.
31. CFCU Credit Union, Ithaca, NY, 09–9130–MR.
32. Chicagoland Mortgage Exchange, Chicago, IL, 09–9139–MR.
33. Citizen's National Bank, Meridian, MS, 09–9243–MR.
34. Clayton Peters & Assoc., Baltimore, MD, 09–9013–MR.
35. CMS Mortgage Solutions Inc., Chesapeake, VA, 09–9526–MR.
36. Colonial Mortgage Service Company, Montgomeryville, PA, 09–9208–MR.
37. Connecticut Housing Inv Fund Inc., Hartford, CT, 08–8046–MR.
38. Covenant Mortgage LLC, Baton Rouge, LA, 10–1665–MRT.
39. Covenant Mortgage LLC, Baton Rouge, LA, 10–1665–RT.
40. Crestwood Mortgage Company, Bensalem, PA, 09–9371–MR.
41. DFB Mortgage, Inc., Douglasville, GA, 10–1667–MRT.
42. DLF Enterprises Inc., West Bend, WI, 09–9529–MR.
43. Drew Mortgage Associates, Inc., Shrewsbury, MA, 09–9247–MR.
44. E and S Financial Group, Inc., Farmington Hills, MI, 09–9312–MR.
45. Exigent Mortgage Corp, Palm Harbor, FL, 09–9134–MR.
46. Farmers State Bank, Watkins, MN, 09–9081–MR.
47. Fidelity Mortgage Group, West Memphis, AR, 09–9099–MR.
48. Financial Security Bank (fka State Bank), Albertville, MN, 09–9116–MR.
49. First Boston Mortgage Corp., Woburn, MA, 10–1729–MRT.
50. First Choice Mortgage of South Florida, Inc., Miami, FL, 10–1730–MRT.
51. First Financial Bank, NA, Stephenville, TX, 09–9111–MR.
52. First Home Equity Inc., Mauldin, SC, 09–9533–MR.
53. First Sentinel Bank, Richlands, VA, 09–9106–MR.
54. First Star Funding Corp., Olympia Fields, IL, 10–1733–MRT.
55. Flagship Financial Group, LLC, Lehi, UT, 10–1734–MRT.
56. Fox Financial LLC, Mokena, IL, 10–1735–MRT.
57. Frontier Bank, Rock Rapids, IA, 09–9181–MR.
58. Fullerton National Bank, Fullerton, NE, 09–9167–MR.
59. Gateway Bank Mortgage Inc., Raleigh, NC, 09–9019–MR.
60. Great Northern Lending Corp., Cook, MN, 10–1737–MRT.
61. Greater Nevada, LLC, Carson City, NV, 09–9129–MR.
62. Guidance Mortgage Group LLC, Louisville, KY, 10–1738–MRT.
63. Hermes Garcia Mortgage, LLC, Weston, FL, 10–1742–MRT.
64. Home Mortgage Bankers, Carolina, PR, 09–9206–MR.
65. Home Owners Mortgage Equity Corp., Billings, MT, 10–1743–MRT.
66. Homeownership Solutions, LLC, West Hartford, CT, 09–9150–MR.
67. Ideal Federal Savings Bank, Baltimore, MD, 10–1724–MRT.
68. Independent Mortgage LLC, Newton Upper Falls, MA, 10–1746–MRT.
69. Inventive Mortgage Corp., Westchester, IL, 09–9210–MR.
70. Kentucky Fidelity Mortgage, Florence, KY, 10–1747–MRT.
71. Keystone Community Bank, Kalamazoo, MI, 09–9186–MR.
72. Keystone Mortgage Group LLC, Knoxville, TN, 10–1748–MRT.
73. Lapeer Co. Bank & Trust, Lapeer, MI, 09–9066–MR.
74. Legacy Lending Group, Meridian, ID, 10–1750–MRT.
75. Leiman Mortgage Network, Lakewood, NJ, 09–9079–MR.
76. Live Well Financial, Inc., Richmond, VA, 09–9352–MR.
77. Loan Chalet Corporation, Orange, CA, 10–1751–MRT.
78. Lorain National Bank, Lorain, OH, 10–1753–MRT.
79. LV Continental Funding Corporation, Hayward, CA, 09–9427–MR.

80. Mainestream Finance, Bangor, ME, 08–8064–MR.
81. Marine Funding, Inc., South Richmond Hill, NY, 09–9324–MR.
82. Massachusetts Housing Investment Corp, Boston, MA, 09–9073–MR.
83. Member Options LLC, Charlottesville, VA, 10–1754–MRT.
84. Mid Oregon Lending, Inc., Bend, OR, 10–1756–MRT.
85. Midwest Custom Mortgage, Inc., Elgin, IL, 09–9270–MR.
86. Money Connection, Inc., Fairlawn, OH, 09–9273–MR.
87. Money Mortgage Corp., Newark, NJ, 10–1758–MRT.
88. Mortgage Approval Center LLC, Chapel Hill, NC, 10–1759–MRT.
89. Mortgage Direct, Inc., Elmhurst, IL, 10–1761–MRT.
90. Mortgage Options of America, Winchester, MA, 09–9102–MR.
91. Mortgage Security, Inc., East Falmouth, MA, 09–9289–MR.
92. Mortgage Services of Louisiana, Inc., Harahan, LA, 09–9274–MR.
93. Mountainside Mortgage LLC, Salt Lake City, UT, 09–9188–MR.
94. MSI Mortgage Services III, LLC, Bloomington, IL, 09–9330–MR.
95. Mullica Financial Services LLC, Blackwood, NJ, 10–1762–MRT.
96. NetCentral Mortgage, LLC, Milwaukee, WI, 09–9254–MR.
97. North Atlantic Mortgage Corp, Burtonsville, MD, 09–9156–MR.
98. Northern Corridor Community Federal Credit Union, Rouses Point, NY, 09–9223–MR.
99. Odin State Bank, Odin, MN, 09–9300–MR.
100. Old J Corporation, Riverside, CA, 08–8055–MR.
101. Oriental Bank and Trust, San Juan, PR, 09–9538–MR.
102. Pacific Community Credit Union, Fullerton, CA, 09–9539–MR.
103. Palace Home Mortgage Corporation, Olympia Fields, IL, 09–9301–MR.
104. Peoples Federal Savings Bank, Auburn, IN, 09–9144–MR.
105. Performance Residential Capital Corp., Farmingdale, NY, 09–9540–MR.
106. Pike Creek Mortgage Services, Inc., Newark, DE, 10–1766–MRT.
107. Pinnacle Bank Wyoming, Cody, WY, 09–9214–MR.
108. Pinnacle Home Mortgage Company, Schaumburg, IL, 10–1767–MRT.
109. Pinnacle Loan Corporation, Atlanta, GA, 10–1768–MRT.
110. Premium Mortgage Corp, Rochester, NY, 09–9315–MR.
111. Proficio Mortgage Ventures LLC, Orlando, FL, 09–9105–MR.
112. R H Lending, Inc., Burleson, TX, 10–1772–MRT.
113. Rapid City Telco Federal Credit Union, Rapid City, SD, 09–9216–MR.
114. Reverse Mortgages of Idaho Incorporated, Boise, ID, 10–1775–MRT.
115. RF Mortgage, San Juan, PR, 09–9108–MR.
116. RMK Financial Corporation, Rancho Cucamonga, CA, 09–9209–MR.
117. Rockland Savings and Loan Association, Rockland, ME, 09–9245–MR.
118. RT Mortgage, Inc., Franklin, OH, 10–1776–MRT.
119. Rusty Rose, Inc., Miami, FL, 10–1777–MRT.
120. Ryland Mortgage, Calabasas, CA, 09–9033–MR.
121. Shell Lake State Bank, Shell Lake, WI, 09–9257–MR.
122. Shore Community Bank, Toms River, NJ, 09–9174–MR.
123. Skyline Mortgage, LLC, Ponte Verde Beach, FL, 09–9195–MR.
124. Society Financial Corp, Farmington, CT, 09–9327–MR.
125. South DeKalb Church Federal Credit Union, Decatur, GA, 09–9265–MR.
126. Southern Missouri Bank of Marshfield, Marshfield, MO, 09–9286–MR.
127. Southern Trust Mortgage LLC, Virginia Beach, VA, 10–1778–MRT.
128. Sunrise Vista Mortgage Corp., Citrus Heights, CA, 09–9541–MR.
129. TBI Mortgage Company, Horsham, PA, 09–9542–MR.
130. Texoma Community Credit Union, Wichita Falls, TX, 09–9032–MR.
131. Total Mortgage Services LLC, Milford, CT, 09–9345–MR.
132. Trinity Mortgage Solutions LLC, Providence, RI, 10–1783–MRT.
133. Troy Mortgage Corporation, Inc., Greenwood Village, CO, 09–9275–MR.
134. Union Bank Benton, Benton, AR, 09–9222–MR.
135. United Mortgage Corporation, Inc., Saint Peters, MO, 10–1787–MRT.
136. Unitrust Mortgage, Inc., San Diego, CA, 10–1788–MRT.
137. Urban Trust Bank, Lake Mary, FL, 09–9251–MR.
138. US Mortgage Network, Sewickley, PA, 09–9335–MR.
139. Victoria Mortgage Bankers, Inc., Chicago, IL, 10–1789–MRT.
140. Village Oaks Financial Group, Bullhead City, AZ, 08–8057–MR.
141. Wachovia Equity Servicing LLC (Title I), Charlotte, NC, 09–9255–MR.
142. Wachovia Equity Servicing LLC (Title II), Charlotte, NC, 09–9255–MR.
143. Weber Financial Services, Inc., Johnson City, TN, 10–1791–MRT.
144. Westerly Community Credit Union, Westerly, RI, 09–9119–MR.
145. Westfield Bank FSB, Medina, OH, 09–9207–MR.
146. Wholesale Capital Corp., Moreno Valley, CA, 08–8038–MR.
147. Yankee Mortgage Company LLC, Glastonbury, CT, 09–9272–MR.

Dated: *July 19, 2010.*

David H. Stevens,

Assistant Secretary for Housing—Federal Housing Commissioner.

[FR Doc. 2010–18156 Filed 7–23–10; 8:45 am]

BILLING CODE 4210–67–P

DEPARTMENT OF THE INTERIOR

Bureau of Land Management

[LLAZC01000.L51010000.FX0000. LVRWA09A2310; AZA 32315]

Notice of Intent To Prepare an Environmental Impact Statement for the Proposed Mohave County Wind Farm Project, Mohave County, AZ

AGENCY: Bureau of Land Management, Interior.

ACTION: Notice of Intent.

SUMMARY: In compliance with the National Environmental Policy Act of 1969, as amended, and the Federal Land Policy and Management Act of 1976 as amended, the Bureau of Land Management (BLM) Kingman Field Office, Kingman, Arizona, intends to prepare an Environmental Impact Statement (EIS) and, by this notice, is announcing the beginning of a second scoping process to solicit public comments and identify issues. The original Notice of Intent (NOI) was published in the **Federal Register** on November 20, 2009 (74 FR 60289). This new notice reflects significant changes to the project area.

DATES: This notice initiates a second public scoping process for this EIS. Comments on issues may be submitted in writing until August 25, 2010. The dates and locations of any scoping meetings will be announced at least 15 days in advance through the local news media, newspapers, and the BLM Web site at: *http://www.blm.gov/az/st/en/prog/energy/wind/mohave.html.* In order to be included in the Draft EIS, all comments must be received prior to the close of the scoping period or 15 days after the last public meeting, whichever is later. We will provide additional opportunities for public participation upon publication of the Draft EIS.

ADDRESSES: You may submit comments related to the Mohave County Wind Project by any of the following methods:

- *Web site: http://www.blm.gov/az/st/en/prog/energy/wind/mohave.html;*
- *E-mail: KFO_WindEnergy@blm.gov;*
- *Fax:* (928) 718–3761; or

• *Mail:* Mohave County Wind Farm, BLM, Kingman Field Office, 2755 Mission Boulevard, Kingman, Arizona 86401.

Documents pertinent to this proposal may be examined at the BLM Kingman Field Office, Kingman, Arizona.

FOR FURTHER INFORMATION CONTACT: If you need more information or want to add your name to our mailing list, contact Jerry Crockford, BLM-contracted Project Manager, telephone (505) 360–0473, address 2755 Mission Boulevard, Kingman, Arizona 86401; e-mail *KFO_WindEnergy@blm.gov;* or Melissa Warren, Project Manager, Renewable Energy Coordination Office, telephone (928) 348–4446; address 2755 Mission Boulevard, Kingman, Arizona 86401; e-mail *KFO_WindEnergy@blm.gov.*

SUPPLEMENTARY INFORMATION: British Petroleum Wind Energy North America (BPWE), has applied for a right-of-way (ROW) authorization to construct, operate and maintain a 500 megawatt (MW) wind farm on approximately 31,338 acres of Federal land managed by the BLM and approximately 8,960 acres of Federal land managed by the Bureau of Reclamation (BOR), totaling approximately 40,298 acres of Federal land. The project area is located in the White Hills area approximately 40 miles northwest of Kingman, Arizona, approximately 9 miles south of the Colorado River, and approximately 20 miles southeast of Hoover Dam. The project will consist of up to 335 wind turbine generators (WTGs). Construction may consist of multiple phases for access roads and ancillary facilities. The WTGs are anticipated to range in productive output from 1.5 to 3.0 MW each. To the extent possible, existing roads would be used for access to the project, supplemented with internal access/service roads to each WTG. Ancillary facilities may include pad-mounted transformers, an underground 34.5-kilovolt (kV) electrical collection system between the turbines, distribution connector lines (either underground or above-ground) tying the turbine strings to either a 345- or 500-kV electrical substation, and either a 345- or 500-kV overhead transmission line from the substation to a new switchyard where the project would interconnect with an existing transmission line in the area.

BPWE submitted a prior application for this project requesting a ROW authorization to construct, operate, and maintain a 500 MW wind farm on approximately 45,420 acres of Federal lands managed by the BLM; the prior application also anticipated that WTGs could be placed on approximately 4,360 acres of private lands. The BLM published the first NOI for this project in the **Federal Register** on November 20, 2009. As a result of feedback received in the first scoping period and BPWE's further refinement of its proposal for the project, approximately 13,522 acres of Federal lands managed by the BLM were removed from the requested ROW area, the project was revised to eliminate construction of WTGs on the approximately 4,360 acres of private lands, and approximately 8,960 acres of Federal lands managed by the BOR were added to the requested ROW area. In addition, the revised application also seeks authorization from BLM for a linear ROW to allow construction of a transmission line to connect to the existing Moenkopi-El Dorado transmission line, approximately 6 miles south of the project area. As a result of these changes to the application and to further agency and public information about, and involvement in, the BLM's review of the application, this second NOI is being published and further scoping comments are solicited.

The purpose of the public scoping process is to determine relevant issues that will influence the scope of the environmental analysis, including alternatives, and guide the process for developing the EIS. At present, the BLM has identified the following preliminary issues: Access requirements; air quality during construction; cultural and historical resources; areas with high mineral potential; noise; sensitive soils and geology; recreation resources; socioeconomics; threatened and endangered species; visual resources; water resources; land with wilderness characteristics; and wildlife habitats. A Scoping Report summarizing the issues generated by public involvement for the original scoping period that concluded on January 8, 2010, is available at: *http://www.blm.gov/az/st/en/prog/energy/wind/mohave.html.*

In accordance with the National Historic Preservation Act, the BLM seeks to obtain the views of the public relating to the potential effects of the proposed project on historic properties, including prehistoric and historic sites, historic structures, and places of traditional cultural importance. Native American tribal consultations will be conducted in accordance with BLM's policy contained in BLM Manual 8120, and tribal concerns, including impacts on Indian trust assets, will be given due consideration. Federal, State, and local agencies, along with other stakeholders that may be interested or affected by the BLM's decision on this project, are invited to participate in the scoping process and, if eligible, may request or be requested by the BLM to participate as a cooperating agency.

Before including your address, phone number, email address, or other personal identifying information in your comment, you should be aware that your entire comment—including your personal identifying information—may be made publicly available at any time. While you can ask us in your comment to withhold your personal identifying information from public review, we cannot guarantee that we will be able to do so.

Authority: 43 CFR 2800.

James G. Kenna,

Arizona State Director.

[FR Doc. 2010–18217 Filed 7–23–10; 8:45 am]

BILLING CODE 4310–32–P

DEPARTMENT OF THE INTERIOR

Bureau of Land Management

[ES–930–1310–FI; ARES 54051, ARES 54053, ARES 54055, ARES 54058, ARES 54063]

Notice of Proposed Reinstatement of Terminated Oil and Gas Leases, Arkansas

AGENCY: Bureau of Land Management, Interior.

ACTION: Notice.

SUMMARY: Under the provisions of the Federal Oil and Gas Royalty Management Act of 1982, the Bureau of Land Management-Eastern States (BLM) received a petition for reinstatement of oil and gas leases ARES 54051, ARES 54053, ARES 54055, ARES 54058, and ARES 54063 from Pergamos, L.P. for lands in Pope and Johnson counties, Arkansas. The petition was filed on time and was accompanied by all the rentals due since the date the lease terminated under the law.

FOR FURTHER INFORMATION CONTACT: Kemba Anderson-Artis, Acting Supervisory Land Law Examiner, BLM–ES, 7450 Boston Boulevard, Springfield, Virginia, at (703) 440–1659.

SUPPLEMENTARY INFORMATION: No valid lease has been issued affecting these lands. The lessee has agreed to the new lease terms for rental and royalties at rates of $10 per acre or fraction thereof, per year, and 16⅔ percent, respectively. The lessee has paid the required $500 administrative fee and $163 to reimburse the BLM for the cost of publishing this Notice in the **Federal Register**. The lessee has met all the requirements for reinstatement as set out in Sections 31(d) and (e) of the

Mineral Leasing Act of 1920 (30 U.S.C. 188), and the BLM is proposing to reinstate the lease effective August 1, 2009, under the original terms and conditions of the lease and the increased rental and royalty rates cited above.

Steven Wells,

Deputy State Director, Division of Natural Resources.

[FR Doc. 2010–18213 Filed 7–23–10; 8:45 am]

BILLING CODE 4310–GJ–P

DEPARTMENT OF THE INTERIOR

Bureau of Land Management

[LLMT922200–10–L13100000–FI0000–P;MTM 97827]

Notice of Proposed Reinstatement of Terminated Oil and Gas Lease MTM 97827, Montana

AGENCY: Bureau of Land Management, Interior.

ACTION: Notice.

SUMMARY: As provided for under the Mineral Lands Leasing Act of 1920, as amended, Longshot Oil LLC timely filed a petition for reinstatement of competitive oil and gas lease MTM 97827, Carbon County, Montana. The lessee paid the required rental accruing from the date of termination.

No leases were issued that affect these lands. The lessee agrees to new lease terms for rentals and royalties of $10 per acre and 16⅔ percent. The lessee paid the $500 administration fee for the reinstatement of the lease and $163 cost for publishing this Notice.

The lessee met the requirements for reinstatement of the lease per Section 31 (d) and (e) of the Mineral Leasing Act of 1920 (30 U.S.C. 188). We are proposing to reinstate the lease, effective the date of termination, subject to:

- The original terms and conditions of the lease;
- The increased rental of $10 per acre;
- The increased royalty of 16⅔ percent; and
- The $163 cost of publishing this Notice.

FOR FURTHER INFORMATION CONTACT: Teri Bakken, Chief, Fluids Adjudication Section, Bureau of Land Management Montana State Office, 5001 Southgate Drive, Billings, Montana 59101–4669, 406–896–5091.

Teri Bakken,

Chief, Fluids Adjudication Section.

[FR Doc. 2010–18215 Filed 7–23–10; 8:45 am]

BILLING CODE 4310–DN–P

DEPARTMENT OF THE INTERIOR

Bureau of Land Management

[LLNV9230000 L13100000.FI0000; NVN–83789 et al; 10–08807; MO#4500013563; TAS: 14x1109]

Notice of Proposed Reinstatement of Terminated Oil and Gas Leases, Nevada

AGENCY: Bureau of Land Management, Interior.

ACTION: Notice of Proposed Reinstatement of Terminated Oil and Gas Lease.

SUMMARY: Under the provisions of the Mineral Lands Leasing Act of 1920, the Bureau of Land Management (BLM) received a petition for reinstatement from Heyser Gas Field, Inc., for competitive oil and gas leases NVN–83789, NVN–83790, NVN–85288, NVN–85299, NVN–85303, NVN–85318, NVN–85324, NVN–85325, NVN–85328, NVN–85332, NVN–85409, NVN–85410, NVN–85411, NVN–85416, NVN–85423, NVN–85424, NVN–85440, NVN–85446, and NVN–85518 for land in White Pine County, Nevada. The petition was timely filed and was accompanied by all the rentals due since the date the lease terminated under the law.

FOR FURTHER INFORMATION CONTACT: Atanda Clark, BLM Nevada State Office, 775–861–6632, or e-mail: *Atanda_Clark@blm.gov.*

SUPPLEMENTARY INFORMATION: The lessee has agreed to the amended lease terms for rental and royalties at rates of $5 per acre or fraction thereof, per year and 16⅔ percent, respectively. The lessee has paid the required $500 administrative fee for each lease and has reimbursed the Department for the cost of this **Federal Register** notice. The lessee has met all the requirements for reinstatement of the lease as set out in Sections 31(d) and (e) of the Mineral Leasing Act of 1920 (30 U.S.C. 188), and the BLM is proposing to reinstate the leases effective September 1, 2009, under the original terms and conditions of the leases and the increased rental and royalty rates cited above. The BLM has not issued a valid lease affecting the lands to any other interest in the interim.

Authority: 43 CFR 3108.2–3(a).

Gary Johnson,

Deputy State Director, Minerals Management.

[FR Doc. 2010–18218 Filed 7–23–10; 8:45 am]

BILLING CODE 4310–HC–P

INTERNATIONAL TRADE COMMISSION

[Inv. No. 337–TA–501]

In the Matter of Certain Encapsulated Integrated Circuit Devices and Products Containing Same; Notice of Commission Final Determination of No Violation of Section 337; Termination of Investigation

AGENCY: U.S. International Trade Commission.

ACTION: Notice.

SUMMARY: Notice is hereby given that the U.S. International Trade Commission has determined that there is no violation of section 337 of the Tariff Act of 1930, as amended (19 U.S.C. 1337), in the above-captioned investigation. The Commission has terminated the investigation.

FOR FURTHER INFORMATION CONTACT: Michael Liberman, Office of the General Counsel, U.S. International Trade Commission, 500 E Street, SW., Washington, DC 20436, telephone 202–205–3112. Copies of non-confidential documents filed in connection with this investigation are or will be available for inspection during official business hours (8:45 a.m. to 5:15 p.m.) in the Office of the Secretary, U.S. International Trade Commission, 500 E Street, SW., Washington, DC 20436, telephone 202–205–2000. General information concerning the Commission may also be obtained by accessing its Internet server (*http://www.usitc.gov*). The public record for this investigation may be viewed on the Commission's electronic docket (EDIS) at *http://edis.usitc.gov.* Hearing-impaired persons are advised that information on this matter can be obtained by contacting the Commission's TDD terminal on 202–205–1810.

SUPPLEMENTARY INFORMATION: The Commission instituted this investigation under section 337 of the Tariff Act of 1930, 19 U.S.C. 1337 ("section 337"), on December 19, 2003, based on a complaint filed by Amkor Technology, Inc. ("Amkor") alleging a violation of section 337 in the importation, sale for importation, and sale within the United States after importation of certain encapsulated integrated circuit devices and products containing same in connection with several claims of three patents owned by Amkor, *i.e,* U.S. Patent Nos. 6,433,277 ("the '277 patent"); 6,630,728 ("the '728 patent"); and 6,455,356 ("the '356 patent"). The complainant named Carsem (M) Sdn Bhd; Carsem Semiconductor Sdn Bhd;

and Carsem, Inc. (collectively, "Carsem") as respondents.

On November 18, 2004, the ALJ issued a final initial determination ("Final ID") finding no violation of section 337, as well as a recommended determination on remedy and bond. After reviewing the Final ID in its entirety, the Commission on March 31, 2005, modified the ALJ's claim construction and remanded the investigation to the ALJ with instructions "to conduct further proceedings and make any new findings or changes to his original findings that are necessitated by the Commission's new claim construction." Commission Order ¶ 8 (March 31, 2005). On November 9, 2005, the ALJ issued a remand initial determination ("Remand ID"), in which he found a violation of section 337 with regard to six claims of one asserted patent, but found no violation in connection with the claims of the two other asserted patents.

Completion of this investigation has been delayed because of difficulty in obtaining from third-party ASAT, Inc. ("ASAT") certain documents that Carsem asserted were critical for its affirmative defenses. The Commission's efforts to enforce a February 11, 2004, subpoena *duces tecum* and *ad testificandum* directed to ASAT resulted in a July 1, 2008, order and opinion of the U.S. District Court for the District of Columbia granting the Commission's second enforcement petition.

On July 1, 2009, after ASAT had complied with the subpoena, the Commission issued a notice and order remanding this investigation to the ALJ to consider the ASAT documents and extending the target date for completion of this investigation. On September 10–11, 2009, a hearing was held to address Carsem's invalidity defenses based on the ASAT documents. On October 30, 2009, the ALJ issued a supplemental ID ("First Supplemental ID") reaffirming his finding of a violation of section 337.

On December 16, 2009, the Commission issued a notice of its decision to review the First Supplemental ID. On February 18, 2010, the Commission issued a Notice and Order reversing the ALJ's finding that ASAT's invention is not prior art to Amkor's asserted patents, and remanding the investigation to the ALJ to make necessary findings in light of the Commission's determination. In order to allow sufficient time to complete the investigation, the Commission extended the target date for completion of the investigation to July 20, 2010, and directed the ALJ to issue his findings by March 22, 2010.

On February 24, 2010, Amkor filed a petition for clarification (and in the alternative reconsideration) of the Commission's February 18, 2010, Notice and Order. On March 3, 2010, and March 8, 2010, respectively, the IA and Carsem filed responses opposing Amkor's request. On March 9, 2010, Amkor filed a motion to strike Carsem's opposition to Amkor's petition for clarification, alleging it was untimely. On March 11, 2010, Carsem opposed Amkor's motion to strike.

On March 22, 2010, the ALJ issued a Supplemental ID ("Second Supplemental ID") in which he found that the '277 and '728 patents were invalid in view of ASAT prior art and determined that there was no violation of Section 337 in the present investigation.

Amkor and Carsem filed their initial comments seeking review of various portions of the Second Supplemental ID. Carsem's request for review is conditioned on the Commission's decision to review the Second Supplemental ID. All the parties also filed their timely response comments.

The Commission has examined the record in this investigation, including the ALJ's Remand ID and Second Supplemental ID. The Remand ID found that a violation of Section 337 had occurred with respect to certain claims of the '277 patent, but not with respect to the '728 or '356 patents. Remand ID at 111–113. More specifically, the Remand ID found that: (1) Carsem infringed the asserted claims of the '277 patent, Amkor practiced claim 21 of the '277 patent, and claims 2, 3, 4, 21, 22, and 23 of the '277 patent had not been shown to be invalid; (2) Carsem infringed claims 1, 2, and 7 of the '728 patent but did not infringe claims 3, 4, and 8 of the same patent, Amkor practiced claim 1 of the '728 patent, and all of the asserted claims of the '728 patent had been shown to be invalid; and (3) Carsem did not infringe the asserted claims of the '356 patent, Amkor did not practice claim 13 of the '356 patent, and none of the asserted claims of the '356 patent had been shown to be invalid. *Id.*

The ALJ's Second Supplemental ID found that: (1) Claims 21–23 of the '277 patent are invalid as anticipated by the ASAT invention; (2) claims 1–4, 7, 17, 18, and 20 of the '277 patent, as well as claims 1–4, 7, and 8 of the '728 patent, are invalid as obvious in view of various combinations of the prior art references involving the ASAT invention; and (3) the asserted claims of the '356 patent are not invalid in view of the ASAT invention. Second Supplemental ID at 37. As a result of these findings, the Second Supplemental ID "modif[ied] the Initial Determination in the 2005 Remand ID to find no violation of Section 337 of the Tariff Act of 1930, as amended, in the importation into the United States, the sale for importation, or the sale within the United States after importation of certain encapsulated integrated circuit devices and products contains same in connection with claims 1–4, 7, 17, 18, 20, 21–23 of the U.S. Patent No. 6,433,277, claims 1–4, 7, and 8 of U.S. Patent No. 6,630,728 and claims 1, 2, 13 and 14 of U.S. Patent No. 6,455,356." Second Supplemental ID at 38.

The Commission has examined the parties' respective comments and responses thereto, and has determined not to review the findings made in the Remand ID and in the Second Supplemental ID. As a result, the Commission has determined that there is no violation of section 337 in this investigation. The Commission has also denied Amkor's request for clarification and motion to strike. The Commission has terminated the investigation, and an opinion supporting the Commission's determination will be issued.

The authority for the Commission's determination is contained in section 337 of the Tariff Act of 1930, as amended (19 U.S.C. 1337), and sections 210.41–.42, 210.50 of the Commission's Rules of Practice and Procedure (19 CFR 210.41–.42, 210.50).

Issued: July 20, 2010.

By order of the Commission.

William R. Bishop,

Acting Secretary to the Commission.

[FR Doc. 2010–18162 Filed 7–23–10; 8:45 am]

BILLING CODE P

DEPARTMENT OF JUSTICE

Notice of Lodging of Consent Decree Under the Federal Water Pollution Control Act ("Clean Water Act")

Notice is hereby given that on July 21, 2010, a proposed Consent Decree in *United States of America* v. *Fafard Real Estate and Development Corp., FRE Building Co. Inc., and Benchmark Engineering Corp.,* Civil Action No. 10–40131 was lodged with the United States District Court for the District of Massachusetts.

In this action, the United States alleged that Defendants violated Sections 301 and 308 of the Clean Water Act, 33 U.S.C. 1311 and 1318, at thirteen of its facilities in Massachusetts by discharging pollutants in storm water associated with construction activity without a permit, failing to timely

submit information required to obtain coverage under the applicable storm water permit, and failing to comply with the requirements of the storm water permit. The Consent Decree requires Defendants to pay a civil penalty of $150,000, perform a Supplemental Environmental Project, and implement injunctive relief designed to ensure compliance with the Clean Water Act at all its facilities. The Supplemental Environmental Project requires the Defendants to impose a permanent restriction on a parcel of land and offer it as a donation to the Town of Uxbridge, Massachusetts, as well as construct two water quality basins and associated storm water management infrastructure on the Project site. The injunctive relief requires the Defendants to establish the position of storm water manager within the company who will be responsible for storm water compliance; conduct pre-construction inspections and quarterly oversight inspections and reviews using EPA-approved forms at all sites, in addition to required routine inspections; and implement storm water training programs for storm water managers and storm water orientation programs for storm water consultants and contractors.

The Department of Justice will receive comments relating to the Consent Decree for a period of thirty (30) days from the date of this publication. Comments should be addressed to the Deputy Section Chief, Environmental Enforcement Section, Environment and Natural Resources Division, and either e-mailed to *pubcomment-ees.enrd@usdoj.gov* or mailed to P.O. Box 7611, U.S. Department of Justice, Washington, DC 20044–7611, and should refer to *United States* v. *Fafard Real Estate and Development Corp., FRE Building Co. Inc., and Benchmark Engineering Corp.,* D.J. Ref. 90–5–1–1–08714.

The Consent Decree may be examined at the Office of the United States Attorney, One Courthouse Way, John Joseph Moakley Courthouse, Boston, MA 02210, and at U.S. EPA Region 1, 5 Post Office Square, Boston, MA 02109. During the public comment period, the Consent Decree, may also be examined on the following Department of Justice Web site, *http://www.usdoj.gov/enrd/Consent_Decrees.html.* A copy of the Consent Decree may also be obtained by mail from the Consent Decree Library, P.O. Box 7611, U.S. Department of Justice, Washington, DC 20044–7611 or by faxing or e-mailing a request to Tonia Fleetwood (*tonia.fleetwood@usdoj.gov*), fax no. (202) 514–0097, phone confirmation number (202) 514–1547. In requesting a copy from the Consent Decree Library, please enclose a check in the amount of $19.50 (25 cents per page reproduction cost) payable to the U.S. Treasury or, if by email or fax, forward a check in that amount to the Consent Decree Library at the stated address.

Maureen Katz,

Assistant Section Chief, Environmental Enforcement Section, Environment and Natural Resources Division.

[FR Doc. 2010–18242 Filed 7–23–10; 8:45 am]

BILLING CODE 4410–15–P

DEPARTMENT OF LABOR

Employment and Training Administration

[TA–W–72,933]

Hewlett Packard; Hewlett Packard—Enterprise Business Services Formerly Known as Electronic Data Systems, Including On-Site Leased Workers From Sun Microsystems, Inc., Dell Computer Corp., EMC Corp., EMC Corp. Total, Cisco Systems Capital Corporation, Microsoft Corp., Symantec Corp., Xerox Corp., Vmware, Inc., Sun Microsystems Federal, Inc., and ABM Business Machines, Inc., Pontiac, MI; Amended Certification Regarding Eligibility To Apply for Worker Adjustment Assistance

In accordance with Section 223 of the Trade Act of 1974, as amended (“Act”), 19 U.S.C. 2273, the Department of Labor issued a Certification of Eligibility to Apply for Worker Adjustment Assistance on January 25, 2010, applicable to workers of Hewlett Packard, Hewlett Packard—Enterprise Business Services, formerly known as Electronic Data Systems, including on-site leased workers from the above listed firms, Pontiac, Michigan. The petition is dated October 24, 2009. The Department’s Notice of determination was published in the **Federal Register** on March 5, 2010 (75 FR 10322).

The worker group covered by TA–W–72,933 is identical to the worker group covered by an earlier petition (TA–W–71,468; dated June 25, 2009). While it is the Department’s practice to terminate the later petition in order to provide the longest period during which a member of the worker group may apply for Trade Adjustment Assistance (TAA), the Department had delayed the investigation for TA–W–71,468 due to a technical deficiency and continued the investigation for TA–W–72,933. Following the issuance of the certification in TA–W–72,933, the Department issued a Notice of Termination of Investigation for TA–W–71,468.

An unintended result of the Department’s decision is that a portion of workers covered by TA–W–71,468 (workers separated on/after June 25, 2008) are excluded from the certification of TA–W–72,933 (workers separated on/after October 30, 2008, through January 25, 2012).

Accordingly, the Department is amending this certification to include workers covered by TA–W–71,468.

The intent of the Department’s certification is to include all workers of the subject firm who were adversely affected by the subject firm’s acquisition from a foreign country services like or directly competitive with the services supplied by the workers at the Pontiac, Michigan, facility.

The amended notice applicable to TA–W–72,933 is hereby issued as follows:

All workers of Hewlett Packard, Hewlett Packard Enterprise Services, formerly known as Electronic Data Systems, including on-site leased workers from Sun Microsystems, Inc., Dell Computers Corp., EMC Corp., EMC Corp. Total, Cisco Systems Capital Corp., Microsoft Corp., Symantec Corp., Xerox Corp., VMWare, Inc., Sun Microsystems Federal, Inc., and ABM Business Machines, Inc., Pontiac, Michigan, who became totally or partially separated from employment on or after June 25, 2008, through January 25, 2012, and all workers in the group threatened with total or partial separation from employment on date of certification through January 25, 2012, are eligible to apply for adjustment assistance under Chapter 2 of Title II of the Trade Act of 1974, as amended.

Signed in Washington, DC, this 13th day of July 2010.

Elliott S. Kushner,

Certifying Officer, Division of Trade Adjustment Assistance.

[FR Doc. 2010–18190 Filed 7–23–10; 8:45 am]

BILLING CODE 4510–FN–P

DEPARTMENT OF LABOR

Employment and Training Administration

[TA–W–72,496]

Experian, Global Technology Services, a Subsidiary of Experian, Including a Leased Employee From Tapfin Working Off-Site in New York, and On-Site Leased Workers From Tapfin, Schaumburg, IL; Amended Certification Regarding Eligibility To Apply for Worker Adjustment Assistance

In accordance with section 223 of the Trade Act of 1974, as amended (“Act”), 19 U.S.C. 2273, the Department of Labor

issued a Certification of Eligibility to Apply for Worker Adjustment Assistance on January 7, 2010, applicable to workers of Experian, Global Technology Services, a subsidiary of Experian, including on-site leased workers from Tapfin, Schaumburg, Illinois. The notice was published in the **Federal Register** on February 16, 2010 (75 FR 7037).

At the request of the State agency, the Department reviewed the certification for workers of the subject firm. The workers are engaged in activities related to information technology (IT) services.

New information shows that a worker separation has occurred involving an employee under the control of the Schaumburg, Illinois location of Experian, Global Technology Services, a subsidiary of Experian, working off-site in New York. This employee provided various activities related to the supply of information technology (IT) services.

Based on these findings, the Department is amending this certification to include an employee of the Schaumburg, Illinois facility of the subject firm working off-site in New York.

The intent of the Department's certification is to include all workers of the subject firm who were adversely affected by a shift in information technology (IT) services to Chile and Costa Rica.

The amended notice applicable to TA–W–72,496 is hereby issued as follows:

All workers of Experian, Global Technology Services, a subsidiary of Experian, including an leased employee from Tapfin working off-site in New York and on-site leased workers from Tapfin, Schaumburg, Illinois, who became totally or partially separated from employment on or after October 5, 2008 through January 7, 2012, and all workers in the group threatened with total or partial separation from employment on date of certification through two years from the date of certification, are eligible to apply for adjustment assistance under Chapter 2 of Title II of the Trade Act of 1974, as amended.

Signed in Washington, DC, this 14th day of July 2010.

Elliott S. Kushner,

Certifying Officer, Division of Trade Adjustment Assistance.

[FR Doc. 2010–18188 Filed 7–23–10; 8:45 am]

BILLING CODE 4510–FN–P

DEPARTMENT OF LABOR

Employment and Training Administration

TA–W–73,381, MT Rail Link, Inc., Missoula, MT; TA–W–73,381A, Billings, MT; TA–W–73,381B, Laurel, MT; TA–W–73,381C, Livingston, MT; TA–W–73,381D, Helena, MT; Amended Certification Regarding Eligibility To Apply for Worker Adjustment Assistance

In accordance with section 223 of the Trade Act of 1974, as amended ("Act"), 19 U.S.C. 2273, the Department of Labor issued a Certification of Eligibility to Apply for Worker Adjustment Assistance on June 23, 2010, applicable to workers of Montana Rail Link, Inc., Missoula, Montana. The Department's Notice of determination was published in the **Federal Register** on July 7, 2010 (75 FR 39049).

At the request of the State Agency, the Department reviewed the certification for workers of the subject firm. The workers are downstream producers for a firm whose workers are certified as eligible to apply for Trade Adjustment Assistance (TAA).

The review shows that Montana Rail Link, Inc. has corporate offices in Missoula, Montana and operations facilities (yards) in Billings, Laurel, Livingston, Helena and Missoula, Montana. The Billings, Laurel, Livingston, and Helena facilities operate in conjunction with the Missoula facility, and are similarly impacted by the loss of business with the firm whose workers are certified as eligible to apply for TAA.

Based on these findings, the Department is amending this certification to include workers of Montana Rail Link, Inc. at facilities in Billings, Laurel, Livingston, and Helena, Montana.

The amended notice applicable to TA–W–73,381 is hereby issued as follows:

All workers of Montana Rail Link, Inc., Missoula, Montana (TA–W–73,381), Billings, Montana (TA–W–73,381A), Laurel, Montana (TA–W–73,381B), Livingston, Montana (TA–W–73,381C), and Helena, Montana (TA–W–73,381D), who became totally or partially separated from employment on or after January 26, 2009 through June 23, 2012, and all workers in the group threatened with total or partial separation, on or after June 23, 2010 through June 23, 2012, are eligible to apply for adjustment assistance under chapter 2 of Title II of the Trade Act of 1974, as amended.

Signed in Washington, DC, this 8th day of July 2010.

Del Min Amy Chen,

Certifying Officer, Division of Trade Adjustment Assistance.

[FR Doc. 2010–18192 Filed 7–23–10; 8:45 am]

BILLING CODE 4510–FN–P

DEPARTMENT OF LABOR

Employment and Training Administration

[TA–W–73,666]

Badger Meter, Inc., Including On-Site Leased Workers From Sourcepoint Staffing, Seek, and Manpower; Milwaukee, WI; Amended Certification Regarding Eligibility To Apply for Worker Adjustment Assistance

In accordance with Section 223 of the Trade Act of 1974, as amended ("Act"), 19 U.S.C. 2273, the Department of Labor issued a Certification of Eligibility to Apply for Worker Adjustment Assistance on April 28, 2010, applicable to workers of Badger Meter, Inc., including on-site leased workers from Sourcepoint Staffing, Milwaukee, Wisconsin. The notice was published in the **Federal Register** on May 28, 2010 (75 FR 30070).

At the request of a company official, the Department reviewed the certification for workers of the subject firm. The workers are engaged in the production of flow measurement devices and automatic meter reading equipment.

The company reports that workers leased from Seek and Manpower were employed on-site at the Milwaukee, Wisconsin location of Badger Meter, Inc. The Department has determined that these workers were sufficiently under the control of the subject firm to be considered leased workers.

Based on these findings, the Department is amending this certification to include workers leased from Seek and Manpower working on-site at the Milwaukee, Wisconsin location of Badger Meter, Inc.

The amended notice applicable to TA–W–73,666 is hereby issued as follows:

All workers of Badger Meter, Inc., including on-site leased workers from Sourcepoint Staffing, Seek and Manpower, Milwaukee, Wisconsin, who became totally or partially separated from employment on or after February 22, 2009, through April 28, 2012, and all workers in the group threatened with total or partial separation from employment on the date of certification through two years from the date of certification, are eligible to apply for

adjustment assistance under Chapter 2 of Title II of the Trade Act of 1974, as amended.

Signed at Washington, DC, this 14th day of July 2010.

Elliott S. Kushner,

Certifying Officer, Division of Trade Adjustment Assistance.

[FR Doc. 2010–18193 Filed 7–23–10; 8:45 am]

BILLING CODE 4510–FN–P

DEPARTMENT OF LABOR

Employment and Training Administration

TA–W–73,682, Hartford Financial Services Group, Incorporated, Medical Bill Processing and Production Center Support Including On-Site Leased Workers From Beeline: Aurora, IL; TA–W–73,682A, Hartford Financial Services Group, Incorporated Medical Bill Processing and Production Center Support Including On-Site Leased Workers From Beeline: Syracuse, NY; Amended Certification Regarding Eligibility To Apply for Worker Adjustment Assistance

In accordance with Section 223 of the Trade Act of 1974, as amended ("Act"), 19 U.S.C. 2273, the Department of Labor issued a Certification of Eligibility to Apply for Worker Adjustment Assistance on June 10, 2010, applicable to workers of Hartford Financial Services Group, Incorporated, Medical Bill Processing and Production Center Support, Aurora, Illinois and Hartford Financial Services Group, Incorporated, Medical Bill Processing and Production Center Support, Syracuse, New York. The notice was published in the **Federal Register** on July 1, 2010 (75 FR 38137).

At the request of a company official, the Department reviewed the certification for workers of the subject firm. The workers are engaged in activities related to medical bill processing services.

The company reports that workers leased from Beeline were employed on-site at the Aurora, Illinois and Syracuse, New York locations of Hartford Financial Services Group, Incorporated, Medical Bill Processing and Production Center Support. The Department has determined that these workers were sufficiently under the control of the subject firm to be considered leased workers.

Based on these findings, the Department is amending this certification to include workers leased from Beeline working on-site at the Aurora, Illinois and Syracuse, New York locations of Hartford Financial Services Group, Incorporated, Medical Bill Processing and Production Center Support.

The amended notice applicable to TA–W–73,682 and TA–W–73,682A are hereby issued as follows:

All workers of Hartford Financial Services Group, Incorporated, Medical Bill Processing and Production Center Support, including on-site leased workers from Beeline, Aurora, Illinois (TA–W–73,682) and Hartford Financial Services Group, Incorporated, Medical Bill Processing and Production Center Support, including on-site leased workers from Beeline, Syracuse, New York (TA–W–73,682A), who became totally or partially separated from employment on or after March 10, 2009, through June 10, 2012, and all workers in the group threatened with total or partial separation from employment on the date of certification through two years from the date of certification, are eligible to apply for adjustment assistance under Chapter 2 of Title II of the Trade Act of 1974, as amended.

Signed at Washington, DC, this 14th day of July 2010.

Elliott S. Kushner,

Certifying Officer, Division of Trade Adjustment Assistance.

[FR Doc. 2010–18181 Filed 7–23–10; 8:45 am]

BILLING CODE 4510–FN–P

DEPARTMENT OF LABOR

Employment and Training Administration

[TA–W–72,711]

Wire Products Company, Inc., Including Workers Whose Unemployment Insurance (UI) Wages Are Paid Through Globe Pipe Hanger Products, Inc., Cleveland, OH; Amended Certification Regarding Eligibility To Apply for Worker Adjustment Assistance

In accordance with Section 223 of the Trade Act of 1974, as amended ("Act"), 19 U.S.C. 2273, the Department of Labor issued a Certification of Eligibility to Apply for Worker Adjustment Assistance on May 14, 2010, applicable to workers of Wire Products Company, Inc., Cleveland, Ohio. The Department's Notice of determination was published in the **Federal Register** on May 28, 2010 (75 FR 30067).

At the request of a company official, the Department reviewed the certification for workers of the subject firm. The workers are engaged in the production of wires, springs and stampings for industrial customers.

New information shows that workers from Globe Pipe Hanger Products, Inc. were employed on-site and in conjunction with its sister firm, Wire Products Company, Inc. Production is vertically integrated and both entities are experiencing layoffs.

Information also shows that workers separated from employment at the subject firm had their wages reported under a separate unemployment insurance (UI) tax account under the name Globe Pipe Hanger Products, Inc.

Based on these findings, the Department is amending this certification to include workers of Globe Pipe Hanger Products, Inc., working on-site at the Cleveland, Ohio location of the subject firm.

The intent of the Department's certification is to include all workers employed at Wire Products Company, Inc., Cleveland, Ohio who were adversely affected by increased imports of wires, springs and stampings for industrial customers.

The amended notice applicable to TA–W–72,711 is hereby issued as follows:

All workers of Wire Products Company, Inc., including workers whose unemployment insurance (UI) wages are paid through Globe Pipe Hanger Products, Inc., Cleveland, Ohio, who became totally or partially separated from employment on or after October 27, 2008, through May 14, 2012, and all workers in the group threatened with total or partial separation from employment on the date of certification through May 14, 2012, are eligible to apply for adjustment assistance under Chapter 2 of Title II of the Trade Act of 1974, as amended.

Signed at Washington, DC, this 13th day of July 2010.

Del Min Amy Chen,

Certifying Officer, Division of Trade Adjustment Assistance.

[FR Doc. 2010–18189 Filed 7–23–10; 8:45 am]

BILLING CODE 4510–FN–P

DEPARTMENT OF LABOR

Employment and Training Administration

Notice of Determinations Regarding Eligibility To Apply for Worker Adjustment Assistance

In accordance with Section 223 of the Trade Act of 1974, as amended (19 U.S.C. 2273) the Department of Labor herein presents summaries of determinations regarding eligibility to apply for trade adjustment assistance for workers by (TA–W) number issued during the period of July 6, 2010 through July 9, 2010.

In order for an affirmative determination to be made for workers of a primary firm and a certification issued regarding eligibility to apply for worker adjustment assistance, each of the group

eligibility requirements of Section 222(a) of the Act must be met.

I. Under Section 222(a)(2)(A), the following must be satisfied:

(1) A significant number or proportion of the workers in such workers' firm have become totally or partially separated, or are threatened to become totally or partially separated;

(2) the sales or production, or both, of such firm have decreased absolutely; and

(3) One of the following must be satisfied:

(A) Imports of articles or services like or directly competitive with articles produced or services supplied by such firm have increased;

(B) Imports of articles like or directly competitive with articles into which one or more component parts produced by such firm are directly incorporated, have increased;

(C) Imports of articles directly incorporating one or more component parts produced outside the United States that are like or directly competitive with imports of articles incorporating one or more component parts produced by such firm have increased;

(D) Imports of articles like or directly competitive with articles which are produced directly using services supplied by such firm, have increased; and

(4) The increase in imports contributed importantly to such workers' separation or threat of separation and to the decline in the sales or production of such firm; or

II. Section 222(a)(2)(B) all of the following must be satisfied:

(1) A significant number or proportion of the workers in such workers' firm have become totally or partially separated, or are threatened to become totally or partially separated;

(2) One of the following must be satisfied:

(A) There has been a shift by the workers' firm to a foreign country in the production of articles or supply of services like or directly competitive with those produced/supplied by the workers' firm;

(B) There has been an acquisition from a foreign country by the workers' firm of articles/services that are like or directly competitive with those produced/supplied by the workers' firm; and

(3) The shift/acquisition contributed importantly to the workers' separation or threat of separation.

In order for an affirmative determination to be made for adversely affected workers in public agencies and a certification issued regarding eligibility to apply for worker adjustment assistance, each of the group eligibility requirements of Section 222(b) of the Act must be met.

(1) A significant number or proportion of the workers in the public agency have become totally or partially separated, or are threatened to become totally or partially separated;

(2) The public agency has acquired from a foreign country services like or directly competitive with services which are supplied by such agency; and

(3) The acquisition of services contributed importantly to such workers' separation or threat of separation.

In order for an affirmative determination to be made for adversely affected secondary workers of a firm and a certification issued regarding eligibility to apply for worker adjustment assistance, each of the group eligibility requirements of Section 222(c) of the Act must be met.

(1) A significant number or proportion of the workers in the workers' firm have become totally or partially separated, or are threatened to become totally or partially separated;

(2) The workers' firm is a Supplier or Downstream Producer to a firm that employed a group of workers who received a certification of eligibility under Section 222(a) of the Act, and such supply or production is related to the article or service that was the basis for such certification; and

(3) Either—

(A) The workers' firm is a supplier and the component parts it supplied to the firm described in paragraph (2) accounted for at least 20 percent of the production or sales of the workers' firm; or

(B) A loss of business by the workers' firm with the firm described in paragraph (2) contributed importantly to the workers' separation or threat of separation.

In order for an affirmative determination to be made for adversely affected workers in firms identified by the International Trade Commission and a certification issued regarding eligibility to apply for worker adjustment assistance, each of the group eligibility requirements of Section 222(f) of the Act must be met.

(1) The workers' firm is publicly identified by name by the International Trade Commission as a member of a domestic industry in an investigation resulting in—

(A) An affirmative determination of serious injury or threat thereof under section 202(b)(1);

(B) An affirmative determination of market disruption or threat thereof under section 421(b)(1); or

(C) An affirmative final determination of material injury or threat thereof under section 705(b)(1)(A) or 735(b)(1)(A) of the Tariff Act of 1930 (19 U.S.C. 1671d(b)(1)(A) and 1673d(b)(1)(A));

(2) The petition is filed during the 1-year period beginning on the date on which—

(A) A summary of the report submitted to the President by the International Trade Commission under section 202(f)(1) with respect to the affirmative determination described in paragraph (1)(A) is published in the **Federal Register** under section 202(f)(3); or

(B) Notice of an affirmative determination described in subparagraph (1) is published in the **Federal Register**; and

(3) The workers have become totally or partially separated from the workers' firm within—

(A) The 1-year period described in paragraph (2); or

(B) Notwithstanding section 223(b)(1), the 1- year period preceding the 1-year period described in paragraph (2).

Affirmative Determinations for Worker Adjustment Assistance

The following certifications have been issued. The date following the company name and location of each determination references the impact date for all workers of such determination.

The following certifications have been issued. The requirements of Section 222(a)(2)(A) (increased imports) of the Trade Act have been met.

TA–W No.	Subject firm	Location	Impact date
72,319	General Motors Company, formerly known as General Motors Corporation, Willow Run Transmission Plant.	Ypsilanti, MI	September 14, 2008.
72,436	Special Tool Engineering, Inc	Fraser, MI	September 7, 2008.
72,582	General Motors Corporation, Powertrain Flint North; Leased Workers from Allegis Group Services.	Flint, MI	October 2, 2008.

TA–W No.	Subject firm	Location	Impact date
72,647	Graphic Packaging International, Inc., Graphic Packaging Holding Company; Flexible/Multiwall Bag Division.	Wellsburg, WV	October 21, 2008.
72,692	ITW/St. Jude Polymer, Signode CPO Plastics, Illinois Tool Works, Leased Workers Workforce, etc.	Frackville, PA	October 27, 2008.
73,204	The Tie King, Incorporated	Brooklyn, NY	December 17, 2008.
73,297	The Sherwin Williams Company	Deshler, OH	January 5, 2009.
73,724	Rhinestahl Corporation, On-site leased workers from Staffmark Services	Cincinnati, OH	March 15, 2009.
73,915	ITW Shippers Products, Illinois Tool Works; Leased Workers from Randstad and All Staff.	Mt. Pleasant, TN	April 14, 2009.
74,048	Cedar Creek Corporation	High Point, NC	May 4, 2009.
74,056	K & C	San Francisco, CA	April 27, 2009.

The following certifications have been issued. The requirements of Section 222(a)(2)(B) (shift in production or services) of the Trade Act have been met.

TA–W No.	Subject firm	Location	Impact date
72,096	Amphenol Antenna Solutions, FKA Jaybeam Wireless. Subsidiary Amphenol Corp. Leased workers Manpower, etc.	Hickory, NC	August 14, 2008.
72,148	Spansion, LLC, Spansion, Inc.; Leased Workers of Volt Staffing Agency	Sunnyvale, CA	August 26, 2008.
72,608	Quark, Inc., Technical Support Division	Denver, CO	October 13, 2008.
72,770	DEX One Corporation, R.H. Donnelley Corporation; Dex Media Division	Bellevue, WA	October 23, 2008.
72,770A	DEX One Corporation, R.H. Donnelley Corporation; Dex Media Division	Omaha, NE	October 23, 2008.
72,770B	DEX One Corporation, R.H. Donnelley Corporation; Dex Media Division	Phoenix, AZ	October 23, 2008.
72,770C	DEX One Corporation, R.H. Donnelley Corporation; Dex Media Division	Beaverton, OR	October 23, 2008.
72,770D	DEX One Corporation, R.H. Donnelley Corporation; Dex Media Division	Murray, UT	October 23, 2008.
72,876	Electronic Data Systems, Subsidiary of Hewlett-Packard Company; Consulting Services.	Flint, MI	November 12, 2008.
73,500	Franklin Electric Co., Inc	Siloam Springs, AR	February 13, 2010.
73,712	Fiserv Fulfillment Services, Inc., Div. of ISGN Solutions, Inc., leased workers Spherion, Dolphin Staffing, etc.	St. Louis Park, MN	March 10, 2009.
73,822	Ingersoll Rand, On-site leased workers from Manpower	Athens, PA	March 29, 2009.
73,843	Hasbro, Inc., Hasbro Managerial Services, Inc	East Longmeadow, MA.	April 1, 2009.
73,843A	Reliable Temp Agency, Working on-site at Hasbro, Inc	East Longmeadow, MA.	April 1, 2009.
73,962	Ford Motor Credit Company, LLC, Nashville Business Center	Franklin, TN	April 12, 2009.
74,113	Serena Software, Inc., Research and Development	Bellevue, WA	April 29, 2009.
74,128	Oki Data Americas, Inc., Information Technology Division, Leased workers from Technology Services LLC.	Mount Laurel, NJ	May 20, 2009.
74,255	Ford Motor Credit Company, LLC, Ford Credit, Greenville Business Center	Greenville, SC	June 7, 2009.
74,257	Hewlett Packard Company, Finance Division, Leased Workers On and Off-Sites at Multiple Locations.	Palo Alto, CA	May 16, 2009.
74,257A	Hewlett Packard Company, Finance Division, Leased Workers and Teleworkers Across California.	Cupertino and Other Cities, CA.	May 16, 2009.
74,257B	Hewlett Packard Company, Finance Division, Leased Workers and Workers On-Sites at Multiple Locations.	Colorado Springs and Other Cities, CO.	May 16, 2009.
74,257C	Hewlett Packard Company, Finance Division, Leased Workers and Teleworkers Across Connecticut.	State Wide, CT	May 16, 2009.
74,257D	Hewlett Packard Company, Finance Division, Leased Workers and Teleworkers Across Florida.	Miami, FL	May 16, 2009.
74,257E	Hewlett Packard Company, Finance Division, Leased Workers and Teleworkers Across Georgia.	Alpharetta, GA	May 16, 2009.
74,257F	Hewlett Packard Company, Finance Division, Leased Workers and Teleworkers Across Boise.	Boise, ID	May 16, 2009.
74,257G	Hewlett Packard Company, Finance Division, Leased Workers and Teleworkers Across Massachusetts.	Andover and Others Cities, MA.	May 16, 2009.
74,257H	Hewlett Packard Company, Finance Division, Leased Workers and Workers On-Site.	Bethesda, MD	May 16, 2009.
74,257I	Hewlett Packard Company, Finance Division, Leased Workers and Workers On-Site.	Minnetonka, MN	May 16, 2009.
74,257J	Hewlett Packard Company, Finance Division, Leased Workers and Workers On-Site In.	Omaha, NE	May 16, 2009.
74,257K	Hewlett Packard Company, Finance Division, Leased Workers and Teleworkers Across New Hampshire.	State Wide, NH	May 16, 2009.
74,257L	Hewlett Packard Company, Finance Division, Leased Workers and Workers On-Site In.	New Providence, NJ	May 16, 2009.
74,257M	Hewlett Packard Company, Finance Division, Leased Workers and Teleworkers Across North Carolina.	Charlotte, NC	May 16, 2009.
74,257N	Hewlett Packard Company, Finance Division, Leased Workers and Workers On-Site In.	Corvallis, OR	May 16, 2009.

TA–W No.	Subject firm	Location	Impact date
74,257O	Hewlett Packard Company, Finance Division, Leased Workers and Teleworkers Across Pennsylvania.	State Wide, PA	May 16, 2009.
74,257P	Hewlett Packard Company, Finance Division, Leased Workers and Teleworkers Across Texas, On-Site in.	Austin and Other Cities, TX.	May 16, 2009.
74,257Q	Hewlett Packard Company, Finance Division, Leased Workers and Workers On-Site In.	Herndon, VA	May 16, 2009.
74,257R	Hewlett Packard Company, Finance Division, Leased Workers and Workers On-Site In.	Vancouver, WA	May 16, 2009.

The following certifications have been issued. The requirements of Section 222(c) (supplier to a firm whose workers are certified eligible to apply for TAA) of the Trade Act have been met.

TA–W No.	Subject firm	Location	Impact date
73,073	Ventra Belvidere, LLC, Leased Workers from Placement Pros	Belvidere, IL	December 9, 2008.
73,392	ABB Paint Finishing, Incorporated, Subsidiary of ABB, LTD, on-site leased workers from Beeline Corporation.	Pontiac, MI	January 14, 2009.

The following certifications have been issued. The requirements of Section 222(c) (downstream producer for a firm whose workers are certified eligible to apply for TAA) of the Trade Act have been met.

TA–W No.	Subject firm	Location	Impact date
73,738	Allied Systems, Ltd	Fremont, CA	March 17, 2009.

Negative Determinations for Worker Adjustment Assistance

In the following cases, the investigation revealed that the eligibility criteria for worker adjustment assistance have not been met for the reasons specified.

The investigation revealed that the criterion under paragraph (a)(1), or (b)(1), or (c)(1) (employment decline or threat of separation) of section 222 has not been met.

TA–W No.	Subject firm	Location	Impact date
73,634	Republic Engineered Products, Inc., Canton Plant	Canton, OH.	

The investigation revealed that the criteria under paragraphs(a)(2)(A) (increased imports) and (a)(2)(B) (shift in production or services to a foreign country) of section 222 have not been met.

TA–W No.	Subject firm	Location	Impact date
72,076	Hapag-Lloyd (America), Inc., Headquarters	Piscataway, NJ.	
72,825	Guardian Automotive Products, Inc., A Division of Guardian Industries Corporation.	Upper Sandusky, OH.	
72,990	Reliant Machine, Inc	Green Bay, WI.	
73,055	Nuart, Inc., Taylor Corporation; Leased Workers from Volt Workforce Services.	Bedford Park, IL.	
73,113	FXI—Foamex Innovations, FKA Foamex International, Inc., Automotive Products Group.	Novi, MI.	
73,473	Westar Transportation, Inc	Wichita Falls, TX.	
73,487	Sonnie's	Woodbury, MN.	
73,514	Edward W. Daniel, LLC	Cleveland, OH.	
73,779	Portland Title Group, Fidelity National Financial	Beaverton, OR.	

Determinations Terminating Investigations of Petitions for Worker Adjustment Assistance

After notice of the petitions was published in the **Federal Register** and on the Department's Web site, as required by Section 221 of the Act (19 U.S.C. 2271), the Department initiated investigations of these petitions.

The following determinations terminating investigations were issued because the petitioner has requested that the petition be withdrawn.

TA–W No.	Subject firm	Location	Impact date
73,599	Forreston Tool, Inc	Forreston, IL.	

TA–W No.	Subject firm	Location	Impact date
73,977	The Flint Journal	Flint, MI.	

The following determinations terminating investigations were issued in cases where these petitions were not filed in accordance with the requirements of 29 CFR 90.11. Every petition filed by workers must be signed by at least three individuals of the petitioning worker group. Petitioners separated more than one year prior to the date of the petition cannot be covered under a certification of a petition under Section 223(b), and therefore, may not be part of a petitioning worker group. For one or more of these reasons, these petitions were deemed invalid.

TA–W No.	Subject firm	Location	Impact date
74,163	HSBC Household Beneficial	Huber Heights, OH.	
74,314	Goodyear Tire and Rubber Company, Tyler Plant	Tyler, TX.	

The following determinations terminating investigations were issued because the petitioning groups of workers are covered by active certifications. Consequently, further investigation in these cases would serve no purpose since the petitioning group of workers cannot be covered by more than one certification at a time.

TA–W No.	Subject firm	Location	Impact date
73,544	Premier Manufacturing Support Services, Inc	Fremont, CA.	

The following determinations terminating investigations were issued because the petitions are the subject of ongoing investigations under petitions filed earlier covering the same petitioners.

TA–W No.	Subject firm	Location	Impact date
74,249	Hoffman-LaRoche, Inc	Nutley, NJ.	
74,330	San Francisco Chronicle	Union City, CA.	
74,338	Madison County Employment and Training	Wood River, IL.	

I hereby certify that the aforementioned determinations were issued during the period of July 6, 2010 through July 9, 2010. Copies of these determinations may be requested under the Freedom of Information Act. Requests may be submitted by fax, courier services, or mail to FOIA Disclosure Officer, Office of Trade Adjustment Assistance (ETA), U.S. Department of Labor, 200 Constitution Avenue, NW., Washington, DC 20210 or *tofoiarequest@dol.gov.* These determinations also are available on the Department's Web site at *http://www.doleta.gov/tradeact* under the searchable listing of determinations.

Dated: July 16, 2010.

Michael W. Jaffe,

Certifying Officer, Division of Trade Adjustment Assistance.

[FR Doc. 2010–18183 Filed 7–23–10; 8:45 am]

BILLING CODE 4510–FN–P

DEPARTMENT OF LABOR

Employment and Training Administration

Investigations Regarding Certifications of Eligibility To Apply for Worker Adjustment Assistance

Petitions have been filed with the Secretary of Labor under Section 221(a) of the Trade Act of 1974 ("the Act") and are identified in the Appendix to this notice. Upon receipt of these petitions, the Director of the Division of Trade Adjustment Assistance, Employment and Training Administration, has instituted investigations pursuant to Section 221(a) of the Act.

The purpose of each of the investigations is to determine whether the workers are eligible to apply for adjustment assistance under Title II, Chapter 2, of the Act. The investigations will further relate, as appropriate, to the determination of the date on which total or partial separations began or threatened to begin and the subdivision of the firm involved.

The petitioners or any other persons showing a substantial interest in the subject matter of the investigations may request a public hearing, provided such request is filed in writing with the Director, Division of Trade Adjustment Assistance, at the address shown below, not later than August 5, 2010.

Interested persons are invited to submit written comments regarding the subject matter of the investigations to the Director, Division of Trade Adjustment Assistance, at the address shown below, not later than August 5, 2010.

Copies of these petitions may be requested under the Freedom of Information Act. Requests may be submitted by fax, courier services, or mail, to FOIA Disclosure Officer, Office of Trade Adjustment Assistance (ETA), U.S. Department of Labor, 200 Constitution Avenue, NW., Washington, DC 20210 or to *foiarequest@dol.gov.*

Signed at Washington, DC, this 15th of July 2010.

Elliott Kushner,

Certifying Officer, Division of Trade Adjustment Assistance.

APPENDIX—TAA PETITIONS INSTITUTED BETWEEN 7/6/10 AND 7/9/10

TA–W	Subject firm (petitioners)	Location	Date of institution	Date of petition
74338	Madison County Employment and Training (Union)	Wood River, IL	07/06/10	06/22/10
74339	Sitel Corporation (Company)	Memphis, TN	07/06/10	07/01/10
74340	Bert Jensen & Sons, Inc. (Union)	Racine, WI	07/06/10	07/02/10
74341	Charleston Forge (Workers)	Boone, NC	07/07/10	06/22/10
74342	International Paper Company (State/One-Stop)	Jonesboro, AR	07/07/10	07/06/10
74343	Diversey (Company)	Santa Cruz, CA	07/07/10	07/01/10
74344	Hanes Brands, Inc. (Workers)	Winston Salem, NC	07/07/10	06/18/10
74345	Medtronic Spine, LLC (Company)	Sunnyvale, CA	07/07/10	07/01/10
74346	Warner Brothers Entertainment Company, et al. (State/One-Stop).	Burbank, CA	07/07/10	07/01/10
74347	NCR Corporation (Workers)	West Columbia, SC	07/07/10	06/18/10
74348	TriZetto Group (State/One-Stop)	Greenwood Village, CO	07/07/10	07/01/10
74349	Belding Hausman, Inc. (Company)	Emporia, VA	07/07/10	06/28/10
74350	PricewaterhouseCoopers (Workers)	Chicago, IL	07/07/10	06/24/10
74351	Anthem Insurance Companies, Inc. (Workers)	Mason, OH	07/07/10	07/01/10
74352	Trim Master, Inc. (State/One-Stop)	Nicholasville, KY	07/07/10	06/30/10
74353	Riverhawk Aviation (Workers)	Hickory, NC	07/08/10	06/30/10
74354	HSBC Card Services, Inc. (Workers)	Tulsa, OK	07/08/10	06/18/10
74355	Dish Network Service Corporation (Workers)	McKeesport, PA	07/08/10	06/30/10
74356	Industrial Technologies Corporation (Company)	Missoula, MT	07/08/10	07/02/10
74357	Cinram Manufacturing, LLC (State/One-Stop)	Simi Valley, CA	07/08/10	07/07/10
74358	PW Hardwoods (Workers)	Brookville, PA	07/08/10	06/23/10
74359	SuperMedia, LLC (Workers)	Everett, WA	07/08/10	07/01/10
74360	CR Compressors, LLC (Company)	Decatur, AL	07/09/10	07/08/10
74361	CR Compressors, LLC (Company)	Hartselle, AL	07/09/10	07/08/10
74362	Harley-Davidson (Company)	York, PA	07/09/10	07/01/10
74363	Affiliated Computer Services (Workers)	London, KY	07/09/10	07/01/10
74364	International Business Machines Corporation (IBM) (State/One-Stop).	Armonk, NY	07/09/10	06/29/10
74365	Envios El Cid, Inc. (Workers)	Glendale, CA	07/09/10	06/28/10
74366	Ryder Truck Rental (Workers)	Auburn Hills, MI	07/09/10	06/28/10
74367	Sensata Technologies (Workers)	Attleboro, MA	07/09/10	06/30/10

[FR Doc. 2010–18182 Filed 7–23–10; 8:45 am]

BILLING CODE 4510–FN–P

DEPARTMENT OF LABOR

Employment and Training Administration

[TA–W–70,749]

FANUC Robotics America, Inc., Including On-Site Leased Workers From Right Angle Staffing, Inc., Quanta, Inc., Reliance One, Inc., Populus Group, LLC, Citistaff, Global Automation Technologies, LLC, and Proflow Systems Rochester Hills, MI; Notice of Negative Determination on Reconsideration

On June 21, 2010, the Department of Labor issued a Notice of Affirmative Determination Regarding Application for Reconsideration applicable to workers and former workers of the subject firm. The Department's Notice of determination was published in the **Federal Register** on July 1, 2010 (75 FR 38125).

The initial investigation resulted in a negative determination which was based on the finding that, during the relevant period, Fanuc Robotics America neither imported articles like or directly competitive with the robotic systems produced at the subject firm, shifted to a foreign country the production of articles like or directly competitive with the robotic systems produced at the subject firm, nor acquired from a foreign country the production of articles like or directly competitive with the robotic systems produced at the subject firm. The Department's survey of the subject firm's major declining customers regarding their purchases of robotic systems in 2007, 2008, and during January through April 2009 revealed negligible imports of robotic systems.

The investigation also revealed that the subject firm was not eligible as a Supplier or a Downstream Producer because they did not supply a component used by a firm that employed a worker group covered by an active Trade Adjustment Assistance (TAA) certification.

In the request for reconsideration, the petitioner provided a list of the subject firm's customers which employed a worker group covered by a TAA certification. In subsequent communications, the petitioner emphasized that she and fellow employees had participated in the actual production process in their customers' plants during the initial installation, testing, and worker training phases following the delivery of the subject firm's robotic devices to the customers.

In response to the request for reconsideration, the Department contacted the subject firm about which of the TAA-certified customers had required employees of the subject firm to be present in the customer's plants during production. The reconsideration investigation revealed that contracts requiring on-site presence of subject firm workers in the customers' plants were infrequent; the sales associated with contracts requiring such presence amounted to a small percentage of the subject firm's total sales (ranging from 1.3 and 5.4 percent during 2007, 2008, and January to April 2009); and the on-site presence of the subject firm's workers was not related to production but related to post-sale customer support.

Because the services supplied by the subject firm to the alleged customers which employed a worker group covered by a TAA certification were not directly used in the production of the

article that was the basis of the TAA certification, the workers of the subject firm did not meet the criteria of Section 222(c) and are, therefore, not eligible to apply for TAA as adversely affected secondary workers.

Conclusion

After reconsideration, I affirm the original notice of negative determination of eligibility to apply for worker adjustment assistance for workers and former workers of Fanuc Robotics America, Inc., Rochester Hills, Michigan.

Signed in Washington, DC, this 13th day of July 2010.

Del Min Amy Chen,

Certifying Officer, Division of Trade Adjustment Assistance.

[FR Doc. 2010–18184 Filed 7–23–10; 8:45 am]

BILLING CODE 4510–FN–P

DEPARTMENT OF LABOR

Employment and Training Administration

[TA–W–72,194]

Pendleton Woolen Mills, Inc., Washougal, WA; Notice of Negative Determination Regarding Application for Reconsideration

By application dated May 4, 2010, a petitioner requested administrative reconsideration of the Department's certification regarding eligibility to apply for Trade Adjustment Assistance (TAA), applicable to workers and former workers of the subject firm. The certification was signed on April 1, 2010, and published in the **Federal Register** on May 5, 2010 (75 FR 24751).

Pursuant to 29 CFR 90.18(c), reconsideration may be granted under the following circumstances:

(1) If it appears on the basis of facts not previously considered that the determination complained of was erroneous;

(2) If it appears that the determination complained of was based on a mistake in the determination of facts not previously considered; or

(3) If in the opinion of the Certifying Officer, a mis-interpretation of facts or of the law justified reconsideration of the decision.

In the request for reconsideration, the petitioner asserted that she and other workers of the subject firm who were laid off more than a year before the date of the petition (August 24, 2009), and were thus not reached by the impact date of the certification (August 24, 2008), should be included in the certification because of their long-term service to the employer, of their long years of working together with other employees who will be covered by the decision, and they should not be penalized for the alleged delay by the petitioner (a union official) who filed the petition in this case.

The applicable regulation, 29 CFR 90.16(e), states that:

A certification of eligibility to apply for adjustment assistance shall not apply to any worker:

(1) Whose last total or partial separation from the firm or appropriate subdivision occurred more than one (1) year before the date of the petition; * * *

In this case, the petition that began this investigation was dated August 24, 2009. Therefore, according to the regulation above, no worker who was separated earlier than August 24, 2008 (*i.e.,* one year prior to the August 24, 2009 petition date) can be included in any certification resulting from the investigation resulting from the petition at issue.

The petitioner in this case was laid off on August 5, 2008, nineteen days before the earliest possible date for workers to receive benefits under certification TA–W–72,194. Consequently, according to 29 CFR 90.16(e), she cannot be covered by that certification.

The petitioner did not supply facts not previously considered or provide additional documentation indicating that there was either (1) a mistake in the determination of facts not previously considered or (2) a misinterpretation of facts or of the law justifying reconsideration of the initial determination.

After careful review of the request for reconsideration, the Department determines that 29 CFR 90.18(c) has not been met.

Conclusion

After review of the application and investigative findings, I conclude that there has been no error or misinterpretation of the law or of the facts which would justify reconsideration of the Department of Labor's prior decision. Accordingly, the application is denied.

Signed in Washington, DC, this 14th day of July 2010.

Del Min Amy Chen,

Certifying Officer, Division of Trade Adjustment Assistance.

[FR Doc. 2010–18187 Filed 7–23–10; 8:45 am]

BILLING CODE 4510–FN–P

DEPARTMENT OF LABOR

Employment and Training Administration

[TA–W–73,199]

Dow Jones & Company, Sharon Pennsylvania Print Plant a Subsidiary of News Corporation, West Middlesex, Pennsylvania; Notice of Negative Determination Regarding Application for Reconsideration

By application dated June 21, 2010, a petitioner requested administrative reconsideration of the Department's negative determination regarding eligibility to apply for Trade Adjustment Assistance (TAA), applicable to workers and former workers of the subject firm. The determination was signed on May 21, 2010. The Department's Notice of determination was published in the **Federal Register** on June 7, 2010 (75 FR 32224). The workers are engaged in the production of print publications.

Pursuant to 29 CFR 90.18(c), reconsideration may be granted under the following circumstances:

(1) If it appears on the basis of facts not previously considered that the determination complained of was erroneous;

(2) If it appears that the determination complained of was based on a mistake in the determination of facts not previously considered; or

(3) If in the opinion of the Certifying Officer, a mis-interpretation of facts or of the law justified reconsideration of the decision.

The negative determination of the TAA petition filed on behalf of workers at Dow Jones & Company, Sharon Pennsylvania Print Plant, a subsidiary of News Corporation, West Middlesex, Pennsylvania, was based on the finding that the workers' separations were not related to an increase in imports of print publications or a shift in production of print publications to a foreign country, nor did the workers produce a component part that was used by a firm that employed a worker group currently eligible to apply for TAA.

In the request for reconsideration the petitioner stated that the workers of the subject firm should be eligible for TAA because the "plates and film came from a company currently approved for TRA, Konica" and that those plates and film directly impacted the subject firm's production.

Increased imports of component parts, tools, or equipment related to the production of printed publications cannot be a basis for TAA certification under Section 222(a)(2)(A) because the statute requires either increased imports

of articles like or directly competitive with articles produced by the workers' firm, increased imports of articles like or directly competitive with articles into which one or more component parts produced by the workers' firm are directly incorporated, or increased imports of articles like or directly incorporating one or more component parts produced outside of the United States that are like or directly competitive with imports of articles incorporating one or more component parts produced by the workers' firm.

During the initial investigation, the Department inquired into the allegation that "As of July 2010 our film used to produce the newspaper and made in Japan will no longer be manufactured anywhere." The investigation confirmed that the subject firm produced print publications and revealed that, while there is a general decline of the film manufacturing industry, the separations at the subject firm are unrelated to increased imports of articles like or directly competitive with the print publications produced at the subject firm or a shift of production to a foreign country, or acquisition from a foreign country, of articles like or directly competitive with the print publications produced at the subject firm.

In the request for reconsideration, the petitioner alleges that the subject workers are eligible to apply for TAA as adversely affected secondary workers.

The petitioning workers do not meet the criteria set forth in Section 222(c) because the subject firm neither supplied component parts for the product made by a firm that employed a worker group that is currently eligible to apply for TAA (Konica) nor engaged in a further stage of production of the articles produced by a firm that employed a worker group that is currently eligible to apply for TAA (Konica). Neither of those relationships exists between Dow Jones & Company, West Middlesex, Pennsylvania, and any Konica facility.

The petitioner did not supply facts not previously considered; nor provide additional documentation indicating that there was either (1) a mistake in the determination of facts not previously considered or (2) a misinterpretation of facts or of the law justifying reconsideration of the initial determination.

After careful review of the request for reconsideration, the Department determines that 29 CFR 90.18(c) has not been met.

Conclusion

After review of the application and investigative findings, I conclude that there has been no error or misinterpretation of the law or of the facts which would justify reconsideration of the Department of Labor's prior decision. Accordingly, the application is denied.

Signed in Washington, DC, this 9th day of July 2010.

Del Min Amy Chen,

Certifying Officer, Division of Trade Adjustment Assistance.

[FR Doc. 2010–18191 Filed 7–23–10; 8:45 am]

BILLING CODE 4510–FN–P

DEPARTMENT OF LABOR

Employment and Training Administration

TA–W–71,483, Continental Airlines, Inc., Reservations Division, Houston, TX; TA–W–71,483A, Continental Airlines, Inc., Reservations Division, Tampa, FL; TA–W–71,483B, Continental Airlines, Inc., Reservations Division, Salt Lake City, UT; Notice of Negative Determination Regarding Application for Reconsideration

By application dated May 10, 2010, the petitioners requested administrative reconsideration of the Department's determination regarding eligibility to apply for Trade Adjustment Assistance (TAA), applicable to workers and former workers of the subject firm. The determination was signed on April 16, 2010. The Department's Notice of determination was published in the **Federal Register** on May 20, 2010 (75 FR 28301).

Workers of Continental Airlines, Inc., Reservations Division are engaged in employment related to the supply of airline travel arrangement and reservation services.

Pursuant to 29 CFR 90.18(c), reconsideration may be granted under the following circumstances:

(1) If it appears on the basis of facts not previously considered that the determination complained of was erroneous;

(2) if it appears that the determination complained of was based on a mistake in the determination of facts not previously considered; or

(3) if in the opinion of the Certifying Officer, a misinterpretation of facts or of the law justified reconsideration of the decision.

The negative determination applicable to workers and former workers at Continental Airlines, Inc., Reservations Division, Houston, Texas, Continental Airlines, Inc., Reservations Division, Tampa, Florida, and Continental Airlines, Inc., Reservations Division, Salt Lake City, Utah, was based on the findings that the subject firm did not, during the period under investigation, shift to a foreign country the supply of airline travel arrangement and reservation services (or like or directly competitive services) or acquire from a foreign country the supply of airline travel arrangement and reservation services (or like or directly competitive services); that the workers' separation, or threat of separation, was not related to any increase in imports of the supply of airline travel arrangement and reservation services (or like or directly competitive services) or the shift/acquisition of the supply of airline travel arrangement and reservation services (or like or directly competitive services); and that the workers did not supply a service that was directly used in the production of an article or the supply of service by a firm that employed a worker group that is eligible to apply for TAA based on the afore-mentioned article or service.

In the request for reconsideration, the petitioner states that the workers of the subject firm should be eligible for TAA because the subject firm has shifted abroad the airline travel arrangement and reservation services provided by the workers. The petitioner also asserts that the subject firm has separated additional workers and more separations are anticipated at various locations throughout the United States. Additionally, the petitioner states that the subject firm facility in Denver, Colorado was not considered in the investigation.

During the initial investigation, the Department obtained information that shows that the subject firm did not shift the supply of airline travel arrangement and reservation services to a foreign country and that the worker separations were due to the diminished need for such services due to increased use of technology (on-line self-service reservations systems and electronic ticketing).

Because workers are not eligible to file a petition for locations other than the one at which they are or were employed, the petitioner's assertion that the Department should have included the Denver, Colorado location in the determination is not a basis for reconsideration.

The petitioner did not supply facts not previously considered; nor provide additional documentation indicating that there was either: (1) A mistake in the determination of facts not previously considered; or (2) a misinterpretation of facts or of the law justifying reconsideration of the initial determination.

After careful review of the request for reconsideration, the Department determines that 29 CFR 90.18(c) has not been met.

Conclusion

After review of the application and investigative findings, I conclude that there has been no error or misinterpretation of the law or of the facts which would justify reconsideration of the Department of Labor's prior decision. Accordingly, the application is denied.

Signed in Washington, D.C., this 15th day of July 2010.

Del Min Amy Chen,

Certifying Officer, Division of Trade Adjustment Assistance.

[FR Doc. 2010–18185 Filed 7–23–10; 8:45 am]

BILLING CODE 4510–FN–P

DEPARTMENT OF LABOR

Employment and Training Administration

[TA–W–71,494]

Johns Manville; Engineered Products Division, Including On-Site Leased Workers From Volt Workforce Solutions; Spartanburg, SC; Notice of Revised Determination on Reconsideration

By application dated May 2, 2010, a petitioner requested administrative reconsideration of the negative determination applicable to the subject firm. The determination was based on the Department's finding that neither increased imports nor a shift in production to a foreign country contributed importantly to worker separations at the subject firm. The workers are engaged in employment related to the production of polyester non-woven fabric. The negative determination was issued on April 16, 2010. The Department's Notice of negative determination was published in the **Federal Register** on May 20, 2010 (75 FR 28301).

In the request for reconsideration, the petitioner alleged that increased production at an affiliated facility in China caused the loss of business at the Spartanburg, South Carolina facility.

Based on additional information provided by the subject firm during the reconsideration investigation, the Department determines that the subject firm has shifted to a foreign country the production of articles like or directly competitive with the polyester non-woven fabric produced at the subject facility and that the shift of production to China contributed importantly to worker separations at the Spartanburg, South Carolina facility.

Conclusion

After careful review of the additional facts obtained on reconsideration, I determine that workers of Johns Manville, Engineered Products Division, Spartanburg, South Carolina, who are engaged in employment related to the production of polyester non-woven fabric, meet the worker group certification criteria under Section 222(a) of the Act, 19 U.S.C. 2272(a). In accordance with Section 223 of the Act, 19 U.S.C. 2273, I make the following certification:

All workers of Johns Manville, Engineered Products Division, including on-site leased workers from Volt Workforce Solutions, Spartanburg, South Carolina, who became totally or partially separated from employment on or after June 23, 2008, through two years from the date of this certification, and all workers in the group threatened with total or partial separation from employment on date of certification through two years from the date of certification, are eligible to apply for adjustment assistance under Chapter 2 of Title II of the Trade Act of 1974, as amended.

Signed in Washington, DC, this 9th day of July 2010.

Del Min Amy Chen,

Certifying Officer, Division of Trade Adjustment Assistance.

[FR Doc. 2010–18186 Filed 7–23–10; 8:45 am]

BILLING CODE 4510–FN–P

NATIONAL AERONAUTICS AND SPACE ADMINISTRATION

[Notice: (10–084)]

NASA Advisory Council; Ad-Hoc Task Force on Planetary Defense; Meeting

AGENCY: National Aeronautics and Space Administration.

ACTION: Notice of meeting.

SUMMARY: In accordance with the Federal Advisory Committee Act, Public Law 92–463, as amended, the National Aeronautics and Space Administration announces a two-part meeting of the Ad-Hoc Task Force on Planetary Defense of the NASA Advisory Council.

DATES: Tuesday, August 17, 2010, 12 p.m.–3 p.m., and Friday, August 20, 2010, 12 p.m.–3 p.m. All times are Eastern Daylight Time.

ADDRESSES: The meeting will be held via WebEx/Teleconference on both dates.

- August 17, 12 p.m.–3 p.m.: To view briefings, log in to Web site at *https://nasa.webex.com.* Meeting Number: 993 545 318. Passcode: Tuesday817! Join teleconference by dialing toll-free 888–566–1673. Passcode: 12080.
- August 20, 12 p.m.–3 p.m.: To view briefings, log in to Web site at *https://nasa.webex.com.* Meeting Number: 995 328 530. Passcode: Friday820! Join teleconference by dialing toll-free 888–566–1673. Passcode: 12080.

FOR FURTHER INFORMATION CONTACT: Ms. Jane Parham, Exploration Systems Mission Directorate, National Aeronautics and Space Administration Headquarters, Washington, DC 20546, 202–358–1715, *jane.parham@nasa.gov.*

SUPPLEMENTARY INFORMATION: The agenda topic is: Drafting of the Ad-Hoc Task Force on Planetary Defense Final Report to the NASA Advisory Council. The meeting will be open to the public up to the capacity of WebEx and teleconference lines. It is imperative that the meeting be held on these dates to accommodate the scheduling priorities of the key participants.

For questions, please call Jane Parham, 202–358–1815, *jane.parham@nasa.gov.*

Dated: July 19, 2010.

P. Diane Rausch,

Advisory Committee Management Officer, National Aeronautics and Space Administration.

[FR Doc. 2010–18147 Filed 7–23–10; 8:45 am]

BILLING CODE P

NATIONAL ARCHIVES AND RECORDS ADMINISTRATION

Agency Information Collection Activities: Submission for OMB Review; Comment Request

AGENCY: National Archives and Records Administration (NARA).

ACTION: Notice.

SUMMARY: NARA is giving public notice that the agency has submitted to OMB for approval the information collection described in this notice. The public is invited to comment on the proposed information collection pursuant to the Paperwork Reduction Act of 1995.

DATES: Written comments must be submitted to OMB at the address below on or before August 25, 2010 to be assured of consideration.

ADDRESSES: Send comments to Mr. William N. Tucker, Desk Officer for NARA, Office of Management and Budget, New Executive Office Building, Washington, DC 20503; fax: 202–395–5167; or electronically mailed to *William_N._Tucker@omb.eop.gov.*

FOR FURTHER INFORMATION CONTACT: Requests for additional information or

copies of the proposed information collection and supporting statement should be directed to Tamee Fechhelm at telephone number 301–837–1694 or fax number 301–713–7409.

SUPPLEMENTARY INFORMATION: Pursuant to the Paperwork Reduction Act of 1995 (Pub. L. 104–13), NARA invites the general public and other Federal agencies to comment on proposed information collections. NARA published a notice of proposed collection for this information collection on May 10, 2010 (75 FR 25886). No comments were received. NARA has submitted the described information collection to OMB for approval.

In response to this notice, comments and suggestions should address one or more of the following points: (a) Whether the proposed collection information is necessary for the proper performance of the functions of NARA; (b) the accuracy of NARA's estimate of the burden of the proposed information collection; (c) ways to enhance the quality, utility, and clarity of the information to be collected; and (d) ways to minimize the burden of the collection of information on respondents, including the use of information technology; and (e) whether small businesses are affected by this collection. In this notice, NARA is soliciting comments concerning the following information collection:

Title: Microfilm Order.

OMB Number: 3095–0046.

Agency Form Number: NATF Form 36.

Type of Review: Regular.

Affected Public: Business or for-profit, nonprofit organizations and institutions, federal, state and local government agencies, and individuals or households.

Estimated Number of Respondents: 600.

Estimated Time per Response: 10 minutes.

Frequency of Response: On occasion.

Estimated Total Annual Burden Hours: 100 hours.

Abstract: The information collection is prescribed by 36 CFR 1254.72. The collection is prepared by researchers who cannot visit the appropriate NARA research room or who request copies of records as a result of visiting a research room. NARA offers limited provisions to obtain copies of records by mail and requires requests to be made on prescribed forms for certain bodies of records. The National Archives Trust Fund (NATF) Form 36 (5–10), Microfilm Order, is used by customers/researchers for ordering a roll, rolls, or a microfiche of a microfilm publication.

Dated: July 16, 2010.

Charles K. Piercy,

Acting Assistant Archivist for Information Services.

[FR Doc. 2010–18347 Filed 7–23–10; 8:45 am]

BILLING CODE 7515–01–P

NUCLEAR REGULATORY COMMISSION

[Facility Operating License No. R–70; Docket No. 50–166; NRC–2010–0250]

University of Maryland; Notice of Acceptance for Docketing and Opportunity for Hearing on the Application Regarding Renewal of Facility Operating License for an Additional 20-Year Period for the Maryland University Training Reactor and Order Imposing Procedures for Access to Safeguards Information and Sensitive Unclassified Non-Safeguards Information

AGENCY: Nuclear Regulatory Commission.

ACTION: Notice of acceptance for docketing.

FOR FURTHER INFORMATION CONTACT: Spyros A. Traiforos, Project Manager, Research and Test Reactors Projects Branch, Division of Policy and Rulemaking, Office of Nuclear Reactor Regulation, U.S. Nuclear Regulatory Commission, Rockville, MD 20852. Telephone: (301) 415–3965; fax number: (301) 415–1032; e-mail: *Spyros.Traiforos@nrc.gov*.

SUPPLEMENTARY INFORMATION:

I. Introduction

The U.S. Nuclear Regulatory Commission (NRC) is considering an application for the renewal of Facility Operating License No. R–70 ("Application"), which currently authorizes the University of Maryland (the licensee, UMD) to operate the Maryland University Training Reactor (MUTR) at a maximum steady-state thermal power of 250 kilowatts (kW). The renewed license would authorize the applicant to operate the MUTR up to a steady-state thermal power of 250 kW for an additional 20 years from the date of issuance.

By letter dated May 12, 2000, as supplemented by letters dated June 7, August 4, September 17, and October 7, 2004; April 18, 2005, April 25 (two letters), August 28 (two letters), November 9, and December 18, 2006; and May 27, 2010, the licensee submitted an application to the NRC filed pursuant to Title 10 of the Code of Federal Regulations (10 CFR) Section 50.51(a), to renew Facility Operating License No. R–70 for the MUTR.

The application contains sensitive unclassified non-safeguards information (SUNSI) and Safeguards Information (SGI).

Based on its initial review of the application and the supplemental information, the Commission's staff determined that UMD submitted sufficient information in accordance with 10 CFR 50.33 and 10 CFR 50.34 so that the application is acceptable for docketing. The current Docket No. 50–166 for Facility Operating License No. R–70 will be retained. The docketing of the renewal application does not preclude requests for additional information as the review proceeds, nor does it predict whether the Commission will grant or deny the application. Prior to a decision to renew the license, the Commission will make the findings required by the Atomic Energy Act of 1954, as amended (the Act), and the Commission's rules and regulations.

II. Opportunity To Request a Hearing or Petition to Intervene

Within 60 days of this notice, any person(s) whose interest may be affected may file a request for hearing/petition to intervene. As required by 10 CFR 2.309, a petition for leave to intervene shall set forth with particularity the interest of the petitioner/requestor in the proceeding, and how that interest may be affected by the results of the proceeding. The petition should specifically explain the reasons why intervention should be permitted with particular reference to the following general requirements: (1) The name, address and telephone number of the requestor or petitioner; (2) the nature of the requestor's/petitioner's right under the Act to be made a party to the proceeding; (3) the nature and extent of the requestor's/petitioner's property, financial, or other interest in the proceeding; and (4) the possible effect of any decision or order which may be entered in the proceeding on the requestor's/petitioner's interest. The petition must also identify the specific contentions which the petitioner/requestor seeks to have litigated at the proceeding.

Each contention must consist of a specific statement of the issue of law or fact to be raised or controverted. In addition, the petitioner/requestor shall provide a brief explanation of the bases for the contention and a concise statement of the alleged facts or expert opinion which support the contention and on which the petitioner intends to rely in proving the contention at the hearing. The petitioner must also

provide references to those specific sources and documents of which the petitioner is aware and on which the petitioner intends to rely to establish those facts or expert opinion. The petition must include sufficient information to show that a genuine dispute exists with the applicant on a material issue of law or fact. Contentions shall be limited to matters within the scope of the amendment under consideration. The contention must be one which, if proven, would entitle the petitioner/requestor to relief. A petitioner/requestor who fails to satisfy these requirements with respect to at least one contention will not be permitted to participate as a party.

Those permitted to intervene become parties to the proceeding, subject to any limitations in the order granting leave to intervene, and have the opportunity to participate fully in the conduct of the hearing.

Non-timely requests and/or petitions and contentions will not be entertained absent a determination by the Commission, the presiding officer, or the Atomic Safety and Licensing Board that the petition and/or request should be granted and/or the contentions should be admitted, based on a balancing of the factors specified in 10 CFR 2.309(c)(1)(i)–(viii).

A State, county, municipality, Federally-recognized Indian Tribe, or agencies thereof, may submit a petition to the Commission to participate as a party under 10 CFR 2.309(d)(2). The petition should state the nature and extent of the petitioner's interest in the proceeding. The petition should be submitted to the Commission by September 24, 2010. The petition must be filed in accordance with the filing instructions in section IV, and should meet the requirements for petitions for leave to intervene set forth in section III.A, except that State and Federally-recognized Indian Tribes do not need to address the standing requirements in 10 CFR 2.309(d)(1) if the facility is located within its boundaries. The entities listed above could also seek to participate in a hearing as a nonparty pursuant to 10 CFR 2.315(c).

Any person who does not wish, or is not qualified, to become a party to this proceeding may request permission to make a limited appearance pursuant to the provisions of 10 CFR 2.315(a). A person making a limited appearance may make an oral or written statement of position on the issues, but may not otherwise participate in the proceeding. A limited appearance may be made at any session of the hearing or at any prehearing conference, subject to such limits and conditions as may be imposed by the Licensing Board. Persons desiring to make a limited appearance are requested to inform the Secretary of the Commission by September 24, 2010.

III. Electronic Submissions (E-Filing)

All documents filed in NRC adjudicatory proceedings, including a request for hearing, a petition for leave to intervene, any motion or other document filed in the proceeding prior to the submission of a request for hearing or petition to intervene, and documents filed by interested governmental entities participating under 10 CFR 2.315(c), must be filed in accordance with the NRC E-Filing rule (72 FR 49139, August 28, 2007). The E-Filing process requires participants to submit and serve all adjudicatory documents over the Internet, or in some cases to mail copies on electronic storage media. Participants may not submit paper copies of their filings unless they seek an exemption in accordance with the procedures described below.

To comply with the procedural requirements of E-Filing, at least ten (10) days prior to the filing deadline, the participant should contact the Office of the Secretary by e-mail at *hearing.docket@nrc.gov,* or by telephone at (301) 415–1677, to request (1) a digital ID certificate, which allows the participant (or its counsel or representative) to digitally sign documents and access the E-Submittal server for any proceeding in which it is participating; and (2) advise the Secretary that the participant will be submitting a request or petition for hearing (even in instances in which the participant, or its counsel or representative, already holds an NRC-issued digital ID certificate). Based upon this information, the Secretary will establish an electronic docket for the hearing in this proceeding if the Secretary has not already established an electronic docket.

Information about applying for a digital ID certificate is available on NRC's public Web site at *http://www.nrc.gov/site-help/e-submittals/apply-certificates.html.* System requirements for accessing the E-Submittal server are detailed in NRC's "Guidance for Electronic Submission," which is available on the agency's public Web site at *http://www.nrc.gov/site-help/e-submittals.html.* Participants may attempt to use other software not listed on the Web site, but should note that the NRC's E-Filing system does not support unlisted software, and the NRC Meta System Help Desk will not be able to offer assistance in using unlisted software.

If a participant is electronically submitting a document to the NRC in accordance with the E-Filing rule, the participant must file the document using the NRC's online, Web-based submission form. In order to serve documents through EIE, users will be required to install a Web browser plug-in from the NRC Web site. Further information on the Web-based submission form, including the installation of the Web browser plug-in, is available on the NRC's public Web site at *http://www.nrc.gov/site-help/e-submittals.html.*

Once a participant has obtained a digital ID certificate and a docket has been created, the participant can then submit a request for hearing or petition for leave to intervene. Submissions should be in Portable Document Format (PDF) in accordance with NRC guidance available on the NRC public Web site at *http://www.nrc.gov/site-help/e-submittals.html.* A filing is considered complete at the time the documents are submitted through the NRC's E-Filing system. To be timely, an electronic filing must be submitted to the E-Filing system no later than 11:59 p.m. Eastern Time on the due date. Upon receipt of a transmission, the E-Filing system time-stamps the document and sends the submitter an e-mail notice confirming receipt of the document. The E-Filing system also distributes an e-mail notice that provides access to the document to the NRC Office of the General Counsel and any others who have advised the Office of the Secretary that they wish to participate in the proceeding, so that the filer need not serve the documents on those participants separately. Therefore, applicants and other participants (or their counsel or representative) must apply for and receive a digital ID certificate before a hearing request/petition to intervene is filed so that they can obtain access to the document via the E-Filing system.

A person filing electronically using the agency's adjudicatory E-Filing system may seek assistance by contacting the NRC Meta System Help Desk through the "Contact Us" link located on the NRC Web site at *http://www.nrc.gov/site-help/e-submittals.html,* by e-mail at *MSHD.Resource@nrc.gov,* or by a toll-free call at (866) 672–7640. The NRC Meta System Help Desk is available between 8 a.m. and 8 p.m., Eastern Time, Monday through Friday, excluding government holidays.

Participants who believe that they have a good cause for not submitting

documents electronically must file an exemption request, in accordance with 10 CFR 2.302(g), with their initial paper filing requesting authorization to continue to submit documents in paper format. Such filings must be submitted by: (1) First class mail addressed to the Office of the Secretary of the Commission, U.S. Nuclear Regulatory Commission, Washington, DC 20555–0001, Attention: Rulemaking and Adjudications Staff; or (2) courier, express mail, or expedited delivery service to the Office of the Secretary, Sixteenth Floor, One White Flint North, 11555 Rockville Pike, Rockville, Maryland 20852, Attention: Rulemaking and Adjudications Staff. Participants filing a document in this manner are responsible for serving the document on all other participants. Filing is considered complete by first-class mail as of the time of deposit in the mail, or by courier, express mail, or expedited delivery service upon depositing the document with the provider of the service. A presiding officer, having granted an exemption request from using E-Filing, may require a participant or party to use E-Filing if the presiding officer subsequently determines that the reason for granting the exemption from use of E-Filing no longer exists.

Documents submitted in adjudicatory proceedings will appear in NRC's electronic hearing docket which is available to the public at *http://ehd.nrc.gov/EHD_Proceeding/home.asp,* unless excluded pursuant to an order of the Commission, or the presiding officer. Participants are requested not to include personal privacy information, such as social security numbers, home addresses, or home phone numbers in their filings, unless an NRC regulation or other law requires submission of such information. With respect to copyrighted works, except for limited excerpts that serve the purpose of the adjudicatory filings and would constitute a Fair Use application, participants are requested not to include copyrighted materials in their submission. Petitions for leave to intervene must be filed no later than 60 days from July 26, 2010. Non-timely filings will not be entertained absent a determination by the presiding officer that the petition or request should be granted or the contentions should be admitted, based on a balancing of the factors specified in 10 CFR 2.309(c)(1)(i)–(viii).

The NRC maintains an Agencywide Documents Access and Management System (ADAMS), which provides text and image files of NRC's public documents. Detailed guidance which the NRC uses to review applications for the renewal of non-power reactor licenses can be found in the documents NUREG–1537, entitled "Guidelines for Preparing and Reviewing Applications for the Licensing of Non-Power Reactors" and the "Interim Staff Guidance on the Streamlined Review Process for License Renewal for Research Reactors" (ISG) which can be obtained from the Commission's public document room (PDR). The detailed review guidance (NUREG–1537 and the ISG) may be accessed through the NRC's Public Electronic Reading Room on the Internet at *http://www.nrc.gov/reading-rm/adams.html* under ADAMS Accession No. ML042430055 for part one of NUREG–1537, ADAMS Accession No. ML042430048 for part two of NUREG–1537 and ADAMS Accession No. ML092240244 for the ISG. Copies of the application to renew the facility license from the licensee are available for public inspection at the Commission's PDR, located at One White Flint North, 11555 Rockville Pike (first floor), Rockville, Maryland 20852–2738. The initial application and other related documents may be accessed through the NRC's Public Electronic Reading Room, at the address mentioned above, under ADAMS Accession Nos.: May 12, 2000, (ML072210862), June 7, 2004, (ML101970211), August 4, 2004, (ML042240227), September 17, 2004, (ML042940317), October 7, 2004, (ML042940408), April 18, 2005, (ML051160054), April 25, 2006, (two letters ML061250233 and ML061280383), August 28, 2006, (two letters ML101480914 and ML101970209), November 9, 2006, (ML101970210), December 18, 2006, (ML101480913) and May 27, 2010 (ML101670413).

Persons who do not have access to ADAMS, or who encounter problems in accessing the documents located in ADAMS, should contact the NRC PDR Reference staff by telephone at 1–800–397–4209, or (301) 415–4737, or by e-mail to *pdr.resource@nrc.gov.*

Order Imposing Procedures for Access to Sensitive Unclassified Non-Safeguards Information and Safeguards Information for Contention Preparation

A. This Order contains instructions regarding how potential parties to this proceeding may request access to documents containing sensitive unclassified information (including SUNSI and SGI). Requirements for access to SGI are primarily set forth in 10 CFR Parts 2 and 73. Nothing in this Order is intended to conflict with the SGI regulations.

B. Within 10 days after publication of this notice of hearing and opportunity to petition for leave to intervene, any potential party who believes access to SUNSI or SGI is necessary to respond to this notice may request access to SUNSI or SGI. A "potential party" is any person who intends to participate as a party by demonstrating standing and filing an admissible contention under 10 CFR 2.309. Requests for access to SUNSI or SGI submitted later than 10 days after publication will not be considered absent a showing of good cause for the late filing, addressing why the request could not have been filed earlier.

C. The requestor shall submit a letter requesting permission to access SUNSI, SGI, or both to the Office of the Secretary, U.S. Nuclear Regulatory Commission, Washington, DC 20555–0001, Attention: Rulemakings and Adjudications Staff, and provide a copy to the Associate General Counsel for Hearings, Enforcement and Administration, Office of the General Counsel, Washington, DC 20555–0001. The expedited delivery or courier mail address for both offices is: U.S. Nuclear Regulatory Commission, 11555 Rockville Pike, Rockville, Maryland 20852. The e-mail address for the Office of the Secretary and the Office of the General Counsel are *Hearing.Docket@nrc.gov* and *OGCmailcenter@nrc.gov,* respectively.[1] The request must include the following information:

(1) A description of the licensing action with a citation to this **Federal Register** notice;

(2) The name and address of the potential party and a description of the potential party's particularized interest that could be harmed by the action identified in C.(1);

(3) If the request is for SUNSI, the identity of the individual or entity requesting access to SUNSI and the requestor's basis for the need for the information in order to meaningfully participate in this adjudicatory proceeding. In particular, the request must explain why publicly-available versions of the information requested would not be sufficient to provide the basis and specificity for a proffered contention;

(4) If the request is for SGI, the identity of each individual who would have access to SGI if the request is granted, including the identity of any expert, consultant, or assistant who will

[1] While a request for hearing or petition to intervene in this proceeding must comply with the filing requirements of the NRC's "E-Filing Rule," the initial request to access SUNSI and/or SGI under these procedures should be submitted as described in this paragraph.

aid the requestor in evaluating the SGI. In addition, the request must contain the following information:

(a) A statement that explains each individual's "need to know" the SGI, as required by 10 CFR 73.2 and 10 CFR 73.22(b)(1). Consistent with the definition of "need to know" as stated in 10 CFR 73.2, the statement must explain:

(i) Specifically why the requestor believes that the information is necessary to enable the requestor to proffer and/or adjudicate a specific contention in this proceeding; [2] and

(ii) The technical competence (demonstrable knowledge, skill, training or education) of the requestor to effectively utilize the requested SGI to provide the basis and specificity for a proffered contention. The technical competence of a potential party or its counsel may be shown by reliance on a qualified expert, consultant, or assistant who satisfies these criteria.

(b) A completed Form SF–85, "Questionnaire for Non-Sensitive Positions" for each individual who would have access to SGI. The completed Form SF–85 will be used by the Office of Administration to conduct the background check required for access to SGI, as required by 10 CFR Part 2, Subpart G and 10 CFR 73.22(b)(2), to determine the requestor's trustworthiness and reliability. For security reasons, Form SF–85 can only be submitted electronically through the electronic questionnaire for investigations processing (e-QIP) Web site, a secure Web site that is owned and operated by the Office of Personnel Management. To obtain online access to the form, the requestor should contact the NRC's Office of Administration at (301) 492–3524.[3]

(c) A completed Form FD–258 (fingerprint card), signed in original ink, and submitted in accordance with 10 CFR 73.57(d). Copies of Form FD–258 may be obtained by writing the Office of Information Services, U.S. Nuclear Regulatory Commission, Washington, DC 20555–0001, by calling (301) 415–7232 or (301) 492–7311, or by e-mail to *Forms.Resource@nrc.gov*. The fingerprint card will be used to satisfy the requirements of 10 CFR Part 2, 10 CFR 73.22(b)(1), and Section 149 of the Atomic Energy Act of 1954, as amended, which mandates that all persons with access to SGI must be fingerprinted for an FBI identification and criminal history records check;

(d) A check or money order payable in the amount of $ 200.00 [4] to the U.S. Nuclear Regulatory Commission for each individual for whom the request for access has been submitted, and

(e) If the requestor or any individual who will have access to SGI believes they belong to one or more of the categories of individuals that are exempt from the criminal history records check and background check requirements in 10 CFR 73.59, the requestor should also provide a statement identifying which exemption the requestor is invoking and explaining the requestor's basis for believing that the exemption applies. While processing the request, the Office of Administration, Personnel Security Branch, will make a final determination whether the claimed exemption applies. Alternatively, the requestor may contact the Office of Administration for an evaluation of their exemption status prior to submitting their request. Persons who are exempt from the background check are not required to complete the SF–85 or Form FD–258; however, all other requirements for access to SGI, including the need to know, are still applicable.

Note: Copies of documents and materials required by paragraphs C.(4)(b), (c), and (d) of this Order must be sent to the following address:

Office of Administration, U.S. Nuclear Regulatory Commission, Personnel Security Branch, Mail Stop TWB–05–B32M, Washington, DC 20555–0001.

These documents and materials should not be included with the request letter to the Office of the Secretary, but the request letter should state that the forms and fees have been submitted as required above.

D. To avoid delays in processing requests for access to SGI, the requestor should review all submitted materials for completeness and accuracy (including legibility) before submitting them to the NRC. The NRC will return incomplete packages to the sender without processing.

E. Based on an evaluation of the information submitted under paragraphs C.(3) or C.(4) above, as applicable, the NRC staff will determine within 10 days of receipt of the request whether:

(1) There is a reasonable basis to believe the petitioner is likely to establish standing to participate in this NRC proceeding; and

(2) The requestor has established a legitimate need for access to SUNSI or need to know the SGI requested.

F. For requests for access to SUNSI, if the NRC staff determines that the requestor satisfies both E.(1) and E.(2) above, the NRC staff will notify the requestor in writing that access to SUNSI has been granted. The written notification will contain instructions on how the requestor may obtain copies of the requested documents, and any other conditions that may apply to access to those documents. These conditions may include, but are not limited to, the signing of a Non-Disclosure Agreement or Affidavit, or Protective Order [5] setting forth terms and conditions to prevent the unauthorized or inadvertent disclosure of SUNSI by each individual who will be granted access to SUNSI.

G. For requests for access to SGI, if the NRC staff determines that the requestor has satisfied both E.(1) and E.(2) above, the Office of Administration will then determine, based upon completion of the background check, whether the proposed recipient is trustworthy and reliable, as required for access to SGI by 10 CFR 73.22(b). If the Office of Administration determines that the individual or individuals are trustworthy and reliable, the NRC will promptly notify the requestor in writing. The notification will provide the names of approved individuals as well as the conditions under which the SGI will be provided. Those conditions may include, but not be limited to, the signing of a Non-Disclosure Agreement or Affidavit, or Protective Order [6] by each individual who will be granted access to SGI.

H. *Release and Storage of SGI.* Prior to providing SGI to the requestor, the NRC staff will conduct (as necessary) an inspection to confirm that the recipient's information protection system is sufficient to satisfy the requirements of 10 CFR 73.22. Alternatively, recipients may opt to

[2] Broad SGI requests under these procedures are unlikely to meet the standard for need to know; furthermore, staff redaction of information from requested documents before their release may be appropriate to comport with this requirement. These procedures do not authorize unrestricted disclosure or less scrutiny of a requestor's need to know than ordinarily would be applied in connection with an already-admitted contention or non-adjudicatory access to SGI.

[3] The requestor will be asked to provide his or her full name, social security number, date and place of birth, telephone number, and e-mail address. After providing this information, the requestor usually should be able to obtain access to the online form within one business day.

[4] This fee is subject to change pursuant to the Office of Personnel Management's adjustable billing rates.

[5] Any motion for Protective Order or draft Non-Disclosure Affidavit or Agreement for SUNSI must be filed with the presiding officer or the Chief Administrative Judge if the presiding officer has not yet been designated, within 30 days of the deadline for the receipt of the written access request.

[6] Any motion for Protective Order or draft Non-Disclosure Affidavit or Agreement for SGI must be filed with the presiding officer or the Chief Administrative Judge if the presiding officer has not yet been designated, within 180 days of the deadline for the receipt of the written access request.

view SGI at an approved SGI storage location rather than establish their own SGI protection program to meet SGI protection requirements.

I. *Filing of Contentions.* Any contentions in these proceedings that are based upon the information received as a result of the request made for SUNSI or SGI must be filed by the requestor no later than 25 days after the requestor is granted access to that information. However, if more than 25 days remain between the date the petitioner is granted access to the information and the deadline for filing all other contentions (as established in the notice of hearing or opportunity for hearing), the petitioner may file its SUNSI or SGI contentions by that later deadline.

J. *Review of Denials of Access.*

(1) If the request for access to SUNSI or SGI is denied by the NRC staff either after a determination on standing and requisite need, or after a determination on trustworthiness and reliability, the NRC staff shall immediately notify the requestor in writing, briefly stating the reason or reasons for the denial.

(2) Before the Office of Administration makes an adverse determination regarding the proposed recipient(s) trustworthiness and reliability for access to SGI, the Office of Administration, in accordance with 10 CFR 2.705(c)(3)(iii), must provide the proposed recipient(s) any records that were considered in the trustworthiness and reliability determination, including those required to be provided under 10 CFR 73.57(e)(1), so that the proposed recipient(s) have an opportunity to correct or explain the record.

(3) The requestor may challenge the NRC staff's adverse determination with respect to access to SUNSI by filing a challenge within 5 days of receipt of that determination with: (a) The presiding officer designated in this proceeding; (b) if no presiding officer has been appointed, the Chief Administrative Judge, or if he or she is unavailable, another administrative judge, or an administrative law judge with jurisdiction pursuant to 10 CFR 2.318(a); or (c) if another officer has been designated to rule on information access issues, with that officer.

(4) The requestor may challenge the NRC staff's or Office of Administration's adverse determination with respect to access to SGI by filing a request for review in accordance with 10 CFR 2.705(c)(3)(iv). Further appeals of decisions under this paragraph must be made pursuant to 10 CFR 2.311.

K. *Review of Grants of Access.* A party other than the requestor may challenge an NRC staff determination granting access to SUNSI or SGI whose release would harm that party's interest independent of the proceeding. Such a challenge must be filed with the Chief Administrative Judge within 5 days of the notification by the NRC staff of its grant of access.

If challenges to the NRC staff determinations are filed, these procedures give way to the normal process for litigating disputes concerning access to information. The availability of interlocutory review by the Commission of orders ruling on such NRC staff determinations (whether granting or denying access) is governed by 10 CFR 2.311.[7]

L. The Commission expects that the NRC staff and presiding officers (and any other reviewing officers) will consider and resolve requests for access to SUNSI or SGI, and motions for protective orders, in a timely fashion in order to minimize any unnecessary delays in identifying those petitioners who have standing and who have propounded contentions meeting the specificity and basis requirements in 10 CFR Part 2. Attachment 1 to this Order summarizes the general target schedule for processing and resolving requests under these procedures.

It is so ordered.

Dated at Rockville, Maryland this 19th day of July 2010.

For the Commission.

Annette L. Vietti-Cook,

Secretary of the Commission.

ATTACHMENT 1—GENERAL TARGET SCHEDULE FOR PROCESSING AND RESOLVING REQUESTS FOR ACCESS TO SENSITIVE UNCLASSIFIED NON-SAFEGUARDS INFORMATION AND SAFEGUARDS INFORMATION IN THIS PROCEEDING

Day	Event/activity
0	Publication of **Federal Register** notice of hearing and opportunity to petition for leave to intervene, including order with instructions for access requests.
10	Deadline for submitting requests for access to Sensitive Unclassified Non-Safeguards Information (SUNSI) and/or Safeguards Information (SGI) with information: supporting the standing of a potential party identified by name and address; describing the need for the information in order for the potential party to participate meaningfully in an adjudicatory proceeding; demonstrating that access should be granted (*e.g.,* showing technical competence for access to SGI); and, for SGI, including application fee for fingerprint/background check.
60	Deadline for submitting petition for intervention containing: (i) Demonstration of standing; (ii) all contentions whose formulation does not require access to SUNSI and/or SGI (+25 Answers to petition for intervention; +7 petitioner/requestor reply).
20	Nuclear Regulatory Commission (NRC) staff informs the requester of the staff's determination whether the request for access provides a reasonable basis to believe standing can be established and shows (1) need for SUNSI or (2) need to know for SGI. (For SUNSI, NRC staff also informs any party to the proceeding whose interest independent of the proceeding would be harmed by the release of the information.) If NRC staff makes the finding of need for SUNSI and likelihood of standing, NRC staff begins document processing (preparation of redactions or review of redacted documents). If NRC staff makes the finding of need to know for SGI and likelihood of standing, NRC staff begins background check (including fingerprinting for a criminal history records check), information processing (preparation of redactions or review of redacted documents), and readiness inspections.
25	
30	Deadline for NRC staff reply to motions to reverse NRC staff determination(s).
40	(Receipt +30) If NRC staff finds standing and need for SUNSI, deadline for NRC staff to complete information processing and file motion for Protective Order and draft Non-Disclosure Affidavit. Deadline for applicant/licensee to file Non-Disclosure Agreement for SUNSI.
190	(Receipt +180) If NRC staff finds standing, need to know for SGI, and trustworthiness and reliability, deadline for NRC staff to file motion for Protective Order and draft Non-disclosure Affidavit (or to make a determination that the proposed recipient of SGI is not trustworthy or reliable). Note: Before the Office of Administration makes an adverse determination regarding access to SGI, the proposed recipient must be provided an opportunity to correct or explain information.

[7] Requestors should note that the filing requirements of the NRC's E-Filing Rule (72 FR 49139; August 28, 2007) apply to appeals of NRC staff determinations (because they must be served on a presiding officer or the Commission, as applicable), but not to the initial SUNSI/SGI request submitted to the NRC staff under these procedures.

ATTACHMENT 1—GENERAL TARGET SCHEDULE FOR PROCESSING AND RESOLVING REQUESTS FOR ACCESS TO SENSITIVE UNCLASSIFIED NON-SAFEGUARDS INFORMATION AND SAFEGUARDS INFORMATION IN THIS PROCEEDING—Continued

Day	Event/activity
205	Deadline for petitioner to seek reversal of a final adverse NRC staff trustworthiness or reliability determination either before the presiding officer or another designated officer under 10 CFR 2.705(c)(3)(iv).
A	If access granted: Issuance of presiding officer or other designated officer decision on motion for protective order for access to sensitive information (including schedule for providing access and submission of contentions) or decision reversing a final adverse determination by the NRC staff.
A + 3	Deadline for filing executed Non-Disclosure Affidavits. Access provided to SUNSI and/or SGI consistent with decision issuing the protective order.
A + 28	Deadline for submission of contentions whose development depends upon access to SUNSI and/or SGI. However, if more than 25 days remain between the petitioner's receipt of (or access to) the information and the deadline for filing all other contentions (as established in the notice of hearing or opportunity for hearing), the petitioner may file its SUNSI or SGI contentions by that later deadline.
A + 53	(Contention receipt +25) Answers to contentions whose development depends upon access to SUNSI and/or SGI.
A + 60	(Answer receipt +7) Petitioner/Intervenor reply to answers.
>A + 60	Decision on contention admission.

[FR Doc. 2010–18221 Filed 7–23–10; 8:45 am]

BILLING CODE 7590–01–P

NUCLEAR REGULATORY COMMISSION

[Docket Nos. 50–413 and 50–414; NRC–2010–0260]

Duke Energy Carolinas, LLC; Catawba Nuclear Station, Units 1 and 2; Environmental Assessment And Finding of No Significant Impact

The U.S. Nuclear Regulatory Commission (NRC) is considering issuance of amendments to Renewed Facility Operating License No. NPF–35 and Renewed Facility Operating License No. NPF–52, issued to Duke Energy Carolinas, LLC (the licensee), for operation of the Catawba Nuclear Station, Units 1 and 2 (Catawba 1 and 2), respectively, located in York County, South Carolina, in accordance with Title 10 of the *Code of Federal Regulations* (10 CFR) Part 50, Section 50.90. In accordance with 10 CFR 51.21, the NRC performed an environmental assessment documenting its findings. The NRC concluded that the proposed action would have no significant environmental impact.

Environmental Assessment

Identification of the Proposed Action

The proposed action would revise the Renewed Facility Operating Licenses by removing a condition in Appendix B of the Renewed Facility Operating Licenses for Catawba 1 and 2 which had limited the peak rod average burnup to 60 gigawatt-days per metric ton uranium (GWD/MTU) until completion of an NRC environmental assessment supporting an increased limit. The proposed action would allow an increase of the maximum rod average burnup to as high as 62 GWD/MTU. The licensee has procedures in place to ensure that maximum rod burnup will not exceed 62 GWD/MTU.

The proposed action is in accordance with the licensee's application dated October 29, 2009.

The Need for the Proposed Action

The proposed action to delete the license condition for fuel burnup is needed to allow a higher maximum rod average burnup of 62 GWD/MTU, which would allow for more effective fuel management. If the amendment is not approved, the licensee will not be provided the opportunity to increase maximum rod average burnup to as high as 62 GWD/MTU and allow fuel management flexibility.

Environmental Impacts of the Proposed Action

In this environmental assessment regarding the impacts of the use of extended burnup fuel beyond 60 GWD/MTU, the Commission is relying on the results of the updated study conducted for the NRC by the Pacific Northwest National Laboratory (PNNL), entitled "Environmental Effects of Extending Fuel Burnup Above 60 GWD/MTU" (NUREG/CR–6703, PNNL–13257, January 2001). Environmental impacts of high burnup fuel up to 75 GWD/MTU were evaluated in the study, but some aspects of the review were limited to evaluating the impacts of the extended burnup up to 62 GWD/MTU, because of the need for additional data on the effect of extended burnup on gap release fractions. All the aspects of the fuel-cycle were considered during the study, from mining, milling, conversion, enrichment and fabrication through normal reactor operation, transportation, waste management, and storage of spent fuel.

The amendment would allow Catawba 1 and 2 to extend lead rod average burnup to 62 GWD/MTU. The NRC staff has completed its evaluation of the proposed action and concludes that such changes would not adversely affect plant safety, and would have no adverse affect on the probability of any accident. For the accidents that involve damage or melting of the fuel in the reactor core, fuel rod integrity has been shown to be unaffected by extended burnup under consideration; therefore, the probability of an accident will not be affected. For the accidents in which core remains intact, the increased burnup may slightly change the mix of fission products that could be released in the event of a serious accident, but because the radionuclides contributing most to the dose are short-lived, increased burnup would not have an effect on the consequences of a serious accident beyond the previously evaluated accident scenarios. Increases in projected dose consequences of postulated accidents associated with fuel burnup up to 62 GWD/MTU are not considered significant, and remain well below regulatory limits.

Regulatory limits on radiological effluent releases are independent of burnup. The requirements of 10 CFR Part 20, 10 CFR 50.36a, and Appendix I to 10 CFR Part 50 ensure that routine releases of gaseous, liquid or solid radiological effluents to unrestricted areas is kept "As Low As is Reasonably Achievable." Therefore, NRC staff concludes that during routine operations, there would be no significant increase in the amount of gaseous radiological effluents released into the environment as a result of the proposed action, nor will there be a significant increase in the amount of liquid radiological effluents or solid

radiological effluents released into the environment.

The proposed action will not change normal plant operating conditions. No changes are expected in the fuel handling, operational or storing processes. The fuel storage and handling, radioactive waste, and other systems which may contain radioactivity are designed to assure adequate safety under normal conditions. There will be no significant changes in radiation levels during these evolutions. No significant increase in the allowable individual or cumulative occupational radiation exposure is expected to occur.

The use of extended irradiation will not change the potential environmental impacts of incident-free transportation of spent nuclear fuel or the accident risks associated with spent fuel transportation if the fuel is cooled for 5 years after being discharged from the reactor. The PNNL report for the NRC (NUREG/CR–6703, January 2001), concluded that doses associated with incident-free transportation of spent fuel with burnup to 75 GWD/MTU are bounded by the doses given in 10 CFR 51.52, Table S–4 for all regions of the country, based on the dose rates from the shipping casks being maintained within regulatory limits. Increased fuel burnup will decrease the annual discharge of fuel to the spent fuel pool which will postpone the need to remove spent fuel from the pool.

NUREG/CR–6703 determined that no increase in environmental effects of spent fuel transportation accidents are expected as a result of increasing fuel burnup to 75 GWD/MTU.

Based on the nature of the exemption, the proposed action does not result in changes to land use or water use, or result in changes to the quality or quantity of non-radiological effluents. No changes to the National Pollution Discharge Elimination System permit are needed. No effects on the aquatic or terrestrial habitat in the vicinity or the plant, or to threatened, endangered, or protected species under the Endangered Species Act, or impacts to essential fish habitat covered by the Magnuson-Stevens Act are expected. There are no impacts to the air or ambient air quality. There are no impacts to historic and cultural resources. There would be no noticeable effect on socioeconomic conditions in the region. Therefore, no changes or different types of non-radiological environmental impacts are expected as a result of the proposed action. Accordingly, the NRC concludes that there are no significant environmental impacts associated with the proposed action.

For more detailed information regarding the environmental impacts of extended fuel burnup, please refer to the study conducted by PNNL for the NRC, entitled "Environmental Effects of Extending Fuel Burnup Above 60 GWD/MTU" (NUREG/CR–6073, PNL–13257, January 2001, Agencywide Documents Access and Management System (ADAMS) Accession No. ML010310298). The details of the NRC staff's Safety Evaluation will be provided in the amendment that will be issued as part of the letter to the licensee approving the amendment.

Environmental Impacts of the Alternatives to the Proposed Action

As an alternative to the proposed action, the NRC staff considered denial of the proposed action (*i.e.,* the "no-action" alternative). Denial of the application would result in no change in current environmental impacts. The environmental impacts of the proposed action and the alternative action are similar.

Alternative Use of Resources

The action does not involve the use of any different resources than those previously considered in the Final Environmental Statement for Catawba Nuclear Station, Units 1 and 2, or the Generic Environmental Impact Statement for License Renewal of Nuclear Plants: Regarding Catawba Nuclear Station, Units 1 and 2—Final Report (NUREG–1437, Supplement 9), dated December 2002.

Agencies and Persons Consulted

In accordance with its stated policy, on June 16, 2010, the NRC staff consulted with the South Carolina State official, Ms. SE Jenkins, of the South Carolina Department of Health and Environmental Control, regarding the environmental impact of the proposed action. The State official had no comments.

Finding of No Significant Impact

On the basis of the environmental assessment, the NRC staff concludes that the proposed action will not have a significant effect on the quality of the human environment. Accordingly, the NRC staff determined not to prepare an environmental impact statement for the proposed action.

For further details with respect to the proposed action, see the licensee's letter dated October 29, 2009 (ADAMS Accession No. ML093140092). Documents may be examined, and/or copied for a fee, at the NRC's Public Document Room (PDR), located at One White Flint North, Public File Area O1 F21, 11555 Rockville Pike (first floor), Rockville, Maryland. Publicly available records will be accessible electronically from the ADAMS Public Electronic Reading Room on the Internet at the NRC Web site, *http://www.nrc.gov/reading-rm/adams.html.*

Persons who do not have access to ADAMS or who encounter problems in accessing the documents located in ADAMS should contact the NRC PDR Reference staff by telephone at 1–800–397–4209 or 301–415–4737, or send an e-mail to *pdr.resource@nrc.gov.*

Dated at Rockville, Maryland, this 15th day of July 2010.

For The Nuclear Regulatory Commission.

Jon Thompson,

Project Manager, Plant Licensing Branch II–1, Division of Operating Reactor Licensing, Office of Nuclear Reactor Regulation.

[FR Doc. 2010–18241 Filed 7–23–10; 8:45 am]

BILLING CODE 7590–01–P

NUCLEAR REGULATORY COMMISSION

[Docket Nos. 50–369 and 50–370; NRC–2010–0259]

Duke Energy Carolinas, LLC, McGuire Nuclear Station, Units 1 and 2; Environmental Assessment and Finding of No Significant Impact

The U.S. Nuclear Regulatory Commission (NRC) is considering issuance of an amendment to Renewed Facility Operating License No. NPF–9 and Renewed Facility Operating License No. NPF–17, issued to Duke Energy Carolinas, LLC (the licensee), for operation of the McGuire Nuclear Station, Units 1 and 2 (McGuire 1 and 2), respectively, located in Mecklenburg County, North Carolina, in accordance with Title 10 of the *Code of Federal Regulations* (10 CFR) Part 50, Section 50.90. In accordance with 10 CFR 51.21, the NRC performed an environmental assessment documenting its findings. The NRC concluded that the proposed action would have no significant environmental impact.

Environmental Assessment

Identification of the Proposed Action

The proposed action would revise the Renewed Facility Operating Licenses by removing a condition in Appendix B of the Renewed Facility Operating Licenses for McGuire 1 and 2, which had limited the peak rod average burnup to 60 gigawatt-days per metric ton uranium (GWD/MTU) until completion of an NRC environmental assessment supporting an increased limit. The proposed action would allow

an increase of the maximum rod average burnup to as high as 62 GWD/MTU. The licensee has procedures in place to ensure that maximum rod burnup will not exceed 62 GWD/MTU.

The proposed action is in accordance with the licensee's application dated October 29, 2009.

The Need for the Proposed Action

The proposed action to delete the license condition for fuel burnup is needed to allow a higher maximum rod average burnup of 62 GWD/MTU, which would allow for more effective fuel management. If the amendment is not approved, the licensee will not be provided the opportunity to increase maximum rod average burnup to as high as 62 GWD/MTU and allow fuel management flexibility.

Environmental Impacts of the Proposed Action

In this environmental assessment regarding the impacts of the use of extended burnup fuel beyond 60 GWD/MTU, the Commission is relying on the results of the updated study conducted for the NRC by the Pacific Northwest National Laboratory (PNNL), entitled "Environmental Effects of Extending Fuel Burnup Above 60 GWD/MTU" (NUREG/CR–6703, PNNL–13257, January 2001). Environmental impacts of high burnup fuel up to 75 GWD/MTU were evaluated in the study, but some aspects of the review were limited to evaluating the impacts of the extended burnup up to 62 GWD/MTU, because of the need for additional data on the effect of extended burnup on gap release fractions. All the aspects of the fuel-cycle were considered during the study, from mining, milling, conversion, enrichment and fabrication through normal reactor operation, transportation, waste management, and storage of spent fuel.

The amendment would allow McGuire 1 and 2 to extend lead rod average burnup to 62 GWD/MTU. The NRC staff has completed its evaluation of the proposed action and concludes that such changes would not adversely affect plant safety, and would have no adverse effect on the probability of any accident. For the accidents that involve damage or melting of the fuel in the reactor core, fuel rod integrity has been shown to be unaffected by extended burnup under consideration; therefore, the probability of an accident will not be affected. For the accidents in which core remains intact, the increased burnup may slightly change the mix of fission products that could be released in the event of a serious accident, but because the radionuclides contributing most to the dose are short-lived, increased burnup would not have an effect on the consequences of a serious accident beyond the previously evaluated accident scenarios. Increases in projected dose consequences of postulated accidents associated with fuel burnup up to 62 GWD/MTU are not considered significant, and remain well below regulatory limits.

Regulatory limits on radiological effluent releases are independent of burnup. The requirements of 10 CFR Part 20, 10 CFR 50.36a, and Appendix I to 10 CFR Part 50 ensure that routine releases of gaseous, liquid or solid radiological effluents to unrestricted areas is kept "as low as is reasonably achievable." Therefore, NRC staff concludes that during routine operations, there would be no significant increase in the amount of gaseous radiological effluents released into the environment as a result of the proposed action, nor will there be a significant increase in the amount of liquid radiological effluents or solid radiological effluents released into the environment.

The proposed action will not change normal plant operating conditions. No changes are expected in the fuel handling, operational or storing processes. The fuel storage and handling, radioactive waste, and other systems which may contain radioactivity are designed to assure adequate safety under normal conditions. There will be no significant changes in radiation levels during these evolutions. No significant increase in the allowable individual or cumulative occupational radiation exposure is expected to occur.

The use of extended irradiation will not change the potential environmental impacts of incident-free transportation of spent nuclear fuel or the accident risks associated with spent fuel transportation if the fuel is cooled for 5 years after being discharged from the reactor. The PNNL report for the NRC (NUREG/CR–6703, January 2001), concluded that doses associated with incident-free transportation of spent fuel with burnup to 75 GWD/MTU are bounded by the doses given in 10 CFR 51.52, Table S–4 for all regions of the country, based on the dose rates from the shipping casks being maintained within regulatory limits. Increased fuel burnup will decrease the annual discharge of fuel to the spent fuel pool which will postpone the need to remove spent fuel from the pool.

NUREG/CR–6703 determined that no increase in environmental effects of spent fuel transportation accidents is expected as a result of increasing fuel burnup to 75 GWD/MTU.

Based on the nature of the exemption, the proposed action does not result in changes to land use or water use, or result in changes to the quality or quantity of non-radiological effluents. No changes to the National Pollution Discharge Elimination System permit are needed. No effects on the aquatic or terrestrial habitat in the vicinity or the plant, or to threatened, endangered, or protected species under the Endangered Species Act, or impacts to essential fish habitat covered by the Magnuson-Stevens Act are expected. There are no impacts to the air or ambient air quality. There are no impacts to historic and cultural resources. There would be no noticeable effect on socioeconomic conditions in the region. Therefore, no changes or different types of non-radiological environmental impacts are expected as a result of the proposed action. Accordingly, the NRC concludes that there are no significant environmental impacts associated with the proposed action.

For more detailed information regarding the environmental impacts of extended fuel burnup, please refer to the study conducted by PNNL for the NRC, entitled "Environmental Effects of Extending Fuel Burnup Above 60 GWD/MTU" (NUREG/CR–6073, PNL–13257, January 2001, Agencywide Documents Access and Management System (ADAMS) Accession No. ML010310298). The details of the NRC staff's Safety Evaluation will be provided in the amendment that will be issued as part of the letter to the licensee approving the amendment.

Environmental Impacts of the Alternatives to the Proposed Action

As an alternative to the proposed action, the NRC staff considered denial of the proposed action (i.e., the "no-action" alternative). Denial of the application would result in no change in current environmental impacts. The environmental impacts of the proposed action and the alternative action are similar.

Alternative Use of Resources

The action does not involve the use of any different resources than those previously considered in the Final Environmental Statement for McGuire Nuclear Station, Units 1 and 2, or the Generic Environmental Impact Statement for License Renewal of Nuclear Plants: Regarding McGuire Nuclear Station, Units 1 and 2—Final Report (NUREG–1437, Supplement 8), dated December 2002.

Agencies and Persons Consulted

In accordance with its stated policy, on June 16, 2010, the NRC staff consulted with the North Carolina State officials, Mr. James Albright and Mr. William Jeffries, of the North Carolina Department of Environment and Natural Resources, regarding the environmental impact of the proposed action. The State officials had no comments.

Finding of No Significant Impact

On the basis of the environmental assessment, the NRC staff concludes that the proposed action will not have a significant effect on the quality of the human environment. Accordingly, the NRC staff determined not to prepare an environmental impact statement for the proposed action.

For further details with respect to the proposed action, see the licensee's letter dated October 29, 2009 (ADAMS Accession No. ML093140092). Documents may be examined, and/or copied for a fee, at the NRC's Public Document Room (PDR), located at One White Flint North, Public File Area O1 F21, 11555 Rockville Pike (first floor), Rockville, Maryland. Publicly available records will be accessible electronically from the ADAMS Public Electronic Reading Room on the Internet at the NRC Web site, *http://www.nrc.gov/reading-rm/adams.html.* Persons who do not have access to ADAMS or who encounter problems in accessing the documents located in ADAMS should contact the NRC PDR Reference staff by telephone at 1–800–397–4209 or 301–415–4737, or send an e-mail to *pdr.resource@nrc.gov.*

Dated at Rockville, Maryland, this 15th day of July 2010.

For The Nuclear Regulatory Commission.

Jon Thompson,

Project Manager, Plant Licensing Branch II–1, Division of Operating Reactor Licensing, Office of Nuclear Reactor Regulation.

[FR Doc. 2010–18236 Filed 7–23–10; 8:45 am]

BILLING CODE 7590–01–P

NUCLEAR REGULATORY COMMISSION

[Docket No. 50–277; NRC–2010–0258]

Exelon Generation Company, LLC; PSEG Nuclear, LLC; Notice of Consideration of Issuance of Amendment to Facility Operating License for Peach Bottom Atomic Power Station, Unit 2; Opportunity for a Hearing, and Order Imposing Procedures for Access to Sensitive Unclassified Non-Safeguards Information

AGENCY: Nuclear Regulatory Commission.

ACTION: Order and notice of license amendment request, opportunity to comment, opportunity to request a hearing.

DATES: Comments must be filed by August 25, 2010. A request for a hearing must be filed by September 24, 2010.

ADDRESSES: Please include Docket ID NRC–2010–0258 in the subject line of your comments. Comments submitted in writing or in electronic form will be posted on the NRC Web site and on the Federal rulemaking Web site *http://www.regulations.gov.* Because your comments will not be edited to remove any identifying or contact information, the NRC cautions you against including any information in your submission that you do not want to be publicly disclosed.

The NRC requests that any party soliciting or aggregating comments received from other persons for submission to the NRC inform those persons that the NRC will not edit their comments to remove any identifying or contact information, and therefore, they should not include any information in their comments that they do not want publicly disclosed.

You may submit comments by any one of the following methods.

Federal Rulemaking Web site: Go to *http://www.regulations.gov* and search for documents filed under Docket ID NRC–2010–0258. Comments may be submitted electronically through this Web site. Address questions about NRC dockets to Carol Gallagher 301–492–3668; e-mail *Carol.Gallagher@nrc.gov.*

Mail comments to: Chief, Rules, Announcements and Directives Branch (RADB), Office of Administration, Mail Stop: TWB–05–B01M, U.S. Nuclear Regulatory Commission, Washington, DC 20555–0001, or by fax to RADB at (301) 492–3446.

You can access publicly available documents related to this notice using the following methods:

NRC's Public Document Room (PDR): The public may examine, and have copied for a fee, publicly available documents at the NRC's PDR, Room O1 F21, One White Flint North, 11555 Rockville Pike, Rockville, Maryland 20852. These documents may also be viewed electronically on the public computers located at the NRC's PDR at 11555 Rockville Pike, Rockville, Maryland 20852.

NRC's Agencywide Documents Access and Management System (ADAMS): Publicly available documents created or received at the NRC are available electronically at the NRC's Electronic Reading Room at *http://www.nrc.gov/reading-rm/adams.html.* From this page, the public can gain entry into ADAMS, which provides text and image files of NRC's public documents. If you do not have access to ADAMS or if there are problems in accessing the documents located in ADAMS, contact the NRC's PDR reference staff at 1–800–397–4209, 301–415–4737, or by e-mail to *pdr.resource@nrc.gov.* The application for amendment, dated May 27, 2010, contains Proprietary Information and, accordingly, those portions are being withheld from public disclosure. A redacted version of the application for amendment, dated May 27, 2010, is available electronically under ADAMS Accession No. ML101480555.

Federal Rulemaking Web site: Public comments and supporting materials related to this notice can be found at *http://www.regulations.gov* by searching on Docket ID: NRC–2010–0258.

FOR FURTHER INFORMATION CONTACT: John Hughey, Project Manager, Plant Licensing Branch I–2, Division of Operating Reactor Licensing, Office of Nuclear Reactor Regulation, U.S. Nuclear Regulatory Commission, Washington, DC 20555. *Telephone:* 301–415–3204; *fax number:* 301–415–2102; *e-mail:* John.Hughey@nrc.gov.

SUPPLEMENTARY INFORMATION:

I. Introduction

The U.S. Nuclear Regulatory Commission (NRC) is considering issuance of an amendment to Facility Operating License No. DPR–44, issued to Exelon Generation Company, LLC, and PSEG Nuclear, LLC, (licensee) for operation of the Peach Bottom Atomic Power Station (PBAPS), Unit 2, located in York and Lancaster Counties, Pennsylvania.

The proposed amendment would revise the PBAPS, Unit 2, Technical Specification Section 2.1.1 to revise Safety Limit Minimum Critical Power Ratio (SLMCPR) values. The SLMCPR is established to assure that at least 99.9%

of the fuel rods in the core do not experience boiling transition during normal operation and abnormal operating transients. The amendment application is dated May 27, 2010, (Agencywide Documents Access and Management System (ADAMS) Accession No. ML101480555).

Before issuance of the proposed license amendment, the Commission will have made findings required by the Atomic Energy Act of 1954, as amended (the Act), and the Commission's regulations.

The Commission has made a proposed determination that the amendment request involves no significant hazards consideration. Under the Commission's regulations in Title 10 of the *Code of Federal Regulations* (10 CFR), Section 50.92, this means that operation of the facility in accordance with the proposed amendment would not (1) involve a significant increase in the probability or consequences of an accident previously evaluated; or (2) create the possibility of a new or different kind of accident from any accident previously evaluated; or (3) involve a significant reduction in a margin of safety. As required by 10 CFR 50.91(a), the licensee has provided its analysis of the issue of no significant hazards consideration, which is presented below:

1. Does the proposed amendment involve a significant increase in the probability or consequences of an accident previously evaluated?

Response: No.

The derivation of the cycle specific Safety Limit Minimum Critical Power Ratios (SLMCPRs) for incorporation into the Technical Specifications (TS), and their use to determine cycle specific thermal limits, has been performed using the methodology discussed in NEDE–24011–P–A, "General Electric Standard Application for Reactor Fuel," Revision 16.

The basis of the SLMCPR calculation is to ensure that during normal operation and during abnormal operational transients, at least 99.9% of all fuel rods in the core do not experience transition boiling if the limit is not violated. [This acceptance criterion is consistent with the existing criterion as discussed in Section 3.7.3 of the PBAPS Updated Final Safety Analysis Report.] The new SLMCPRs preserve the existing margin to transition boiling.

The MCPR safety limit is reevaluated for each reload using NRC-approved methodologies. The analyses for Peach Bottom Atomic Power Station (PBAPS), Unit 2, Cycle 19 have concluded that a two loop MCPR safety limit of ≥ [greater than or equal to] 1.10, based on the application of Global Nuclear Fuel's NRC-approved MCPR safety limit methodology, will ensure that this acceptance criterion is met. For single-loop operation, a MCPR safety limit of ≥ [greater than or equal to] 1.14 also ensures that this acceptance criterion is met. The MCPR operating limits are presented and controlled in accordance with the PBAPS, Unit 2 Core Operating Limits Report (COLR).

The requested Technical Specification changes do not involve any plant modifications or operational changes that could affect system reliability or performance or that could affect the probability of operator error. The requested changes do not affect any postulated accident precursors, do not affect any accident mitigating systems, and do not introduce any new accident initiation mechanisms. Therefore, the proposed TS changes do not involve a significant increase in the probability or consequences of an accident previously evaluated.

2. Does the proposed change create the possibility of a new or different kind of accident from any accident previously evaluated?

Response: No.

The SLMCPR is a TS numerical value, calculated to ensure that during normal operation and during abnormal operational transients, at least 99.9% of all fuel rods in the core do not experience transition boiling if the limit is not violated. The new SLMCPRs are calculated using NRC-approved methodology discussed in NEDE–24011–P–A, "General Electric Standard Application for Reactor Fuel," Revision 16. The proposed changes do not involve any new modes of operation, any changes to setpoints, or any plant modifications. The proposed revised MCPR safety limits have been shown to be acceptable for Cycle 19 operation. The core operating limits will continue to be developed using NRC-approved methods. The proposed MCPR safety limits or methods for establishing the core operating limits do not result in the creation of any new precursors to an accident. Therefore, this change does not create the possibility of a new or different kind of accident from any previously evaluated.

3. Does the proposed amendment involve a significant reduction in a margin of safety?

Response: No.

There is no significant reduction in the margin of safety previously approved by the NRC as a result of the proposed change to the SLMCPRs. The new SLMCPRs are calculated using methodology discussed in NEDE–24011–P–A, "General Electric Standard Application for Reactor Fuel," Revision 16. The SLMCPRs ensure that during normal operation and during abnormal operational transients, at least 99.9% of all fuel rods in the core do not experience transition boiling if the limit is not violated, thereby preserving the fuel cladding integrity. Therefore, the proposed TS changes do not involve a significant reduction in the margin of safety previously approved by the NRC.

The NRC staff has reviewed the licensee's analysis and, based on this review with the NRC staff changes noted in square brackets above, it appears that the three standards of 10 CFR 50.92(c) are satisfied. Therefore, the NRC staff proposes to determine that the amendment request involves no significant hazards consideration.

The Commission is seeking public comments on this proposed determination. Any comments received by August 25, 2010 will be considered in making any final determination. You may submit comments using any of the methods discussed under the **ADDRESSES** caption.

Normally, the Commission will not issue the amendment until the expiration of 60 days after the date of publication of this notice. The Commission may issue the license amendment before expiration of the 60-day period provided that its final determination is that the amendment involves no significant hazards consideration. In addition, the Commission may issue the amendment prior to the expiration of the 30-day comment period should circumstances change during the 30-day comment period such that failure to act in a timely way would result, for example, in derating or shutdown of the facility. Should the Commission take action prior to the expiration of either the comment period or the notice period, it will publish in the **Federal Register** a notice of issuance. Should the Commission make a final No Significant Hazards Consideration Determination, any hearing will take place after issuance. The Commission expects that the need to take this action will occur very infrequently.

II. Opportunity To Request a Hearing

Requirements for hearing requests and petitions for leave to intervene are found in 10 CFR 2.309, "Hearing requests, Petitions to Intervene, Requirements for Standing, and Contentions." Interested persons should consult 10 CFR Part 2, Section 2.309, which is available at the NRC's Public Document Room (PDR), located at O1 F21, One White Flint North, 11555 Rockville Pike, Rockville, MD 20852 (or call the PDR at (800) 397–4209 or (301) 415–4737). NRC regulations are also accessible electronically from the NRC's Electronic Reading Room on the NRC Web site at *http://www.nrc.gov.*

III. Petitions for Leave To Intervene

Any person whose interest may be affected by this proceeding and who wishes to participate as a party in the proceeding must file a written petition for leave to intervene. As required by 10 CFR 2.309, a petition for leave to intervene shall set forth with particularity the interest of the requestor/petitioner in the proceeding and how that interest may be affected by the results of the proceeding. The petition must provide the name, address, and telephone number of the

requestor or petitioner and specifically explain the reasons why the intervention should be permitted with particular reference to the following factors: (1) The nature of the requestor's/petitioner's right under the Act to be made a party to the proceeding; (2) the nature and extent of the requestor's/petitioner's property, financial, or other interest in the proceeding; and (3) the possible effect of any decision or order which may be entered in the proceeding on the requestor's/petitioner's interest. The petition must also identify the specific contentions which the requestor/petitioner seeks to have litigated at the proceeding.

A petition for leave to intervene must also include a specification of the contentions that the petitioner seeks to have litigated in the hearing. For each contention, the requestor/petitioner must provide a specific statement of the issue of law or fact to be raised or controverted, as well as a brief explanation of the basis for the contention. Additionally, the requestor/petitioner must demonstrate that the issue raised by each contention is within the scope of the proceeding and is material to the findings the NRC must make to support the granting of a license amendment in response to the application. The petition must also include a concise statement of the alleged facts or expert opinions which support the position of the requestor/petitioner and on which the requestor/petitioner intends to rely at hearing, together with references to the specific sources and documents on which the requestor/petitioner intends to rely. Finally, the petition must provide sufficient information to show that a genuine dispute exists with the applicant on a material issue of law or fact, including references to specific portions of the application for amendment that the requestor/petitioner disputes and the supporting reasons for each dispute, or, if the requestor/petitioner believes that the application for amendment fails to contain information on a relevant matter as required by law, the identification of each failure and the supporting reasons for the requestors/petitioner's belief. Each contention must be one that, if proven, would entitle the requestor/petitioner to relief.

Those permitted to intervene become parties to the proceeding, subject to any limitations in the order granting leave to intervene, and have the opportunity to participate fully in the conduct of the hearing with respect to resolution of that person's admitted contentions, including the opportunity to present evidence and to submit a cross-examination plan for cross-examination of witnesses, consistent with NRC regulations, policies, and procedures. The Licensing Board will set the time and place for any prehearing conferences and evidentiary hearings, and the appropriate notices will be provided.

Non-timely petitions for leave to intervene and contentions, amended petitions, and supplemental petitions will not be entertained absent a determination by the Commission, the Licensing Board or a Presiding Officer that the petition should be granted and/or the contentions should be admitted based upon a balancing of the factors specified in 10 CFR 2.309(c)(1)(i)–(viii).

A State, county, municipality, Federally-recognized Indian Tribe, or agencies thereof, may submit a petition to the Commission to participate as a party under 10 CFR 2.309(d)(2). The petition should state the nature and extent of the petitioner's interest in the proceeding. The petition should be submitted to the Commission by September 24, 2010. The petition must be filed in accordance with the filing instructions in Section IV of this document, and should meet the requirements for petitions for leave to intervene set forth in this section, except that State and Federally-recognized Indian tribes do not need to address the standing requirements in 10 CFR 2.309(d)(1) if the facility is located within its boundaries. The entities listed above could also seek to participate in a hearing as a nonparty pursuant to 10 CFR 2.315(c).

Any person who does not wish, or is not qualified, to become a party to this proceeding may request permission to make a limited appearance pursuant to the provisions of 10 CFR 2.315(a). A person making a limited appearance may make an oral or written statement of position on the issues, but may not otherwise participate in the proceeding. A limited appearance may be made at any session of the hearing or at any prehearing conference, subject to such limits and conditions as may be imposed by the Licensing Board. Persons desiring to make a limited appearance are requested to inform the Secretary of the Commission by September 24, 2010.

If a hearing is requested, the Commission will make a final determination on the issue of no significant hazards consideration. The final determination will serve to decide when the hearing is held. If the final determination is that the amendment request involves no significant hazards consideration, the Commission may issue the amendment and make it immediately effective, notwithstanding the request for a hearing. Any hearing held would take place after issuance of the amendment. If the final determination is that the amendment request involves a significant hazards consideration, any hearing held would take place before the issuance of any amendment.

IV. Electronic Submissions (E-Filing)

All documents filed in NRC adjudicatory proceedings, including a request for hearing, a petition for leave to intervene, any motion or other document filed in the proceeding prior to the submission of a request for hearing or petition to intervene, and documents filed by interested governmental entities participating under 10 CFR 2.315(c), must be filed in accordance with the NRC E-Filing rule (72 FR 49139, August 28, 2007). The E-Filing process requires participants to submit and serve all adjudicatory documents over the internet, or in some cases to mail copies on electronic storage media. Participants may not submit paper copies of their filings unless they seek an exemption in accordance with the procedures described below.

To comply with the procedural requirements of E-Filing, at least ten (10) days prior to the filing deadline, the participant should contact the Office of the Secretary by e-mail at *hearing.docket@nrc.gov,* or by telephone at (301) 415–1677, to request (1) a digital ID certificate, which allows the participant (or its counsel or representative) to digitally sign documents and access the E-Submittal server for any proceeding in which it is participating; and (2) advise the Secretary that the participant will be submitting a request or petition for hearing (even in instances in which the participant, or its counsel or representative, already holds an NRC-issued digital ID certificate). Based upon this information, the Secretary will establish an electronic docket for the hearing in this proceeding if the Secretary has not already established an electronic docket.

Information about applying for a digital ID certificate is available on NRC's public Web site at *http://www.nrc.gov/site-help/e-submittals/apply-certificates.html.* System requirements for accessing the E-Submittal server are detailed in NRC's "Guidance for Electronic Submission," which is available on the agency's public Web site at *http://www.nrc.gov/site-help/e-submittals.html.* Participants may attempt to use other software not listed on the Web site, but should note

that the NRC's E-Filing system does not support unlisted software, and the NRC Meta System Help Desk will not be able to offer assistance in using unlisted software.

If a participant is electronically submitting a document to the NRC in accordance with the E-Filing rule, the participant must file the document using the NRC's online, Web-based submission form. In order to serve documents through EIE, users will be required to install a Web browser plug-in from the NRC Web site. Further information on the Web-based submission form, including the installation of the Web browser plug-in, is available on the NRC's public Web site at *http://www.nrc.gov/site-help/e-submittals.html.*

Once a participant has obtained a digital ID certificate and a docket has been created, the participant can then submit a request for hearing or petition for leave to intervene. Submissions should be in Portable Document Format (PDF) in accordance with NRC guidance available on the NRC public Web site at *http://www.nrc.gov/site-help/e-submittals.html.* A filing is considered complete at the time the documents are submitted through the NRC's E-Filing system. To be timely, an electronic filing must be submitted to the E-Filing system no later than 11:59 p.m. Eastern Time on the due date. Upon receipt of a transmission, the E-Filing system time-stamps the document and sends the submitter an e-mail notice confirming receipt of the document. The E-Filing system also distributes an e-mail notice that provides access to the document to the NRC Office of the General Counsel and any others who have advised the Office of the Secretary that they wish to participate in the proceeding, so that the filer need not serve the documents on those participants separately. Therefore, applicants and other participants (or their counsel or representative) must apply for and receive a digital ID certificate before a hearing request/petition to intervene is filed so that they can obtain access to the document via the E-Filing system.

A person filing electronically using the agency's adjudicatory E-Filing system may seek assistance by contacting the NRC Meta System Help Desk through the "Contact Us" link located on the NRC Web site at *http://www.nrc.gov/site-help/e-submittals.html,* by e-mail at *MSHD.Resource@nrc.gov,* or by a toll-free call at (866) 672–7640. The NRC Meta System Help Desk is available between 8 a.m. and 8 p.m., Eastern Time, Monday through Friday, excluding government holidays.

Participants who believe that they have a good cause for not submitting documents electronically must file an exemption request, in accordance with 10 CFR 2.302(g), with their initial paper filing requesting authorization to continue to submit documents in paper format. Such filings must be submitted by: (1) First class mail addressed to the Office of the Secretary of the Commission, U.S. Nuclear Regulatory Commission, Washington, DC 20555–0001, Attention: Rulemaking and Adjudications Staff; or (2) courier, express mail, or expedited delivery service to the Office of the Secretary, Sixteenth Floor, One White Flint North, 11555 Rockville Pike, Rockville, Maryland 20852, Attention: Rulemaking and Adjudications Staff. Participants filing a document in this manner are responsible for serving the document on all other participants. Filing is considered complete by first-class mail as of the time of deposit in the mail, or by courier, express mail, or expedited delivery service upon depositing the document with the provider of the service. A presiding officer, having granted an exemption request from using E-Filing, may require a participant or party to use E-Filing if the presiding officer subsequently determines that the reason for granting the exemption from use of E-Filing no longer exists.

Documents submitted in adjudicatory proceedings will appear in NRC's electronic hearing docket which is available to the public at *http://ehd.nrc.gov/EHD_Proceeding/home.asp,* unless excluded pursuant to an order of the Commission, or the presiding officer. Participants are requested not to include personal privacy information, such as social security numbers, home addresses, or home phone numbers in their filings, unless an NRC regulation or other law requires submission of such information. With respect to copyrighted works, except for limited excerpts that serve the purpose of the adjudicatory filings and would constitute a Fair Use application, participants are requested not to include copyrighted materials in their submission.

Petitions for leave to intervene must be filed no later than 60 days from July 26, 2010. Non-timely filings will not be entertained absent a determination by the presiding officer that the petition or request should be granted or the contentions should be admitted, based on a balancing of the factors specified in 10 CFR 2.309(c)(1)(i)–(viii).

Order Imposing Procedures for Access to Sensitive Unclassified Non-Safeguards Information for Contention Preparation

A. This Order contains instructions regarding how potential parties to this proceeding may request access to documents containing Sensitive Unclassified Non-Safeguards Information (SUNSI).

B. Within 10 days after publication of this notice of hearing and opportunity to petition for leave to intervene, any potential party who believes access to SUNSI is necessary to respond to this notice may request such access. A "potential party" is any person who intends to participate as a party by demonstrating standing and filing an admissible contention under 10 CFR 2.309. Requests for access to SUNSI submitted later than 10 days after publication will not be considered absent a showing of good cause for the late filing, addressing why the request could not have been filed earlier.

C. The requester shall submit a letter requesting permission to access SUNSI to the Office of the Secretary, U.S. Nuclear Regulatory Commission, Washington, DC 20555–0001, *Attention:* Rulemakings and Adjudications Staff, and provide a copy to the Associate General Counsel for Hearings, Enforcement and Administration, Office of the General Counsel, Washington, DC 20555–0001. The expedited delivery or courier mail address for both offices is: U.S. Nuclear Regulatory Commission, 11555 Rockville Pike, Rockville, Maryland 20852. The e-mail address for the Office of the Secretary and the Office of the General Counsel are *Hearing.Docket@nrc.gov and OGCmailcenter@nrc.gov,* respectively.[1] The request must include the following information:

(1) A description of the licensing action with a citation to this **Federal Register** notice;

(2) The name and address of the potential party and a description of the potential party's particularized interest that could be harmed by the action identified in C.(1);

(3) The identity of the individual or entity requesting access to SUNSI and the requester's basis for the need for the information in order to meaningfully participate in this adjudicatory proceeding. In particular, the request must explain why publicly-available

[1] While a request for hearing or petition to intervene in this proceeding must comply with the filing requirements of the NRC's "E-Filing Rule," the initial request to access SUNSI under these procedures should be submitted as described in this paragraph.

versions of the information requested would not be sufficient to provide the basis and specificity for a proffered contention;

D. Based on an evaluation of the information submitted under paragraph C.(3) the NRC staff will determine within 10 days of receipt of the request whether:

(1) There is a reasonable basis to believe the petitioner is likely to establish standing to participate in this NRC proceeding; and

(2) The requestor has established a legitimate need for access to SUNSI.

E. If the NRC staff determines that the requestor satisfies both D.(1) and D.(2) above, the NRC staff will notify the requestor in writing that access to SUNSI has been granted. The written notification will contain instructions on how the requestor may obtain copies of the requested documents, and any other conditions that may apply to access to those documents. These conditions may include, but are not limited to, the signing of a Non-Disclosure Agreement or Affidavit, or Protective Order [2] setting forth terms and conditions to prevent the unauthorized or inadvertent disclosure of SUNSI by each individual who will be granted access to SUNSI.

F. Filing of Contentions. Any contentions in these proceedings that are based upon the information received as a result of the request made for SUNSI must be filed by the requestor no later than 25 days after the requestor is granted access to that information. However, if more than 25 days remain between the date the petitioner is granted access to the information and the deadline for filing all other contentions (as established in the notice of hearing or opportunity for hearing), the petitioner may file its SUNSI contentions by that later deadline.

G. Review of Denials of Access.

(1) If the request for access to SUNSI is denied by the NRC staff either after a determination on standing and need for access, or after a determination on trustworthiness and reliability, the NRC staff shall immediately notify the requestor in writing, briefly stating the reason or reasons for the denial.

(2) The requester may challenge the NRC staff's adverse determination by filing a challenge within 5 days of receipt of that determination with: (a) The presiding officer designated in this proceeding; (b) if no presiding officer has been appointed, the Chief Administrative Judge, or if he or she is unavailable, another administrative judge, or an administrative law judge with jurisdiction pursuant to 10 CFR 2.318(a); or (c) if another officer has been designated to rule on information access issues, with that officer.

H. Review of Grants of Access. A party other than the requester may challenge an NRC staff determination granting access to SUNSI whose release would harm that party's interest independent of the proceeding. Such a challenge must be filed with the Chief Administrative Judge within 5 days of the notification by the NRC staff of its grant of access.

If challenges to the NRC staff determinations are filed, these procedures give way to the normal process for litigating disputes concerning access to information. The availability of interlocutory review by the Commission of orders ruling on such NRC staff determinations (whether granting or denying access) is governed by 10 CFR 2.311.[3]

I. The Commission expects that the NRC staff and presiding officers (and any other reviewing officers) will consider and resolve requests for access to SUNSI, and motions for protective orders, in a timely fashion in order to minimize any unnecessary delays in identifying those petitioners who have standing and who have propounded contentions meeting the specificity and basis requirements in 10 CFR Part 2. Attachment 1 to this Order summarizes the general target schedule for processing and resolving requests under these procedures.

It is so ordered.

Dated at Rockville, Maryland, this 19th day of July 2010.

For the Commission.

Annette L. Vietti-Cook,

Secretary of the Commission.

ATTACHMENT 1—GENERAL TARGET SCHEDULE FOR PROCESSING AND RESOLVING REQUESTS FOR ACCESS TO SENSITIVE UNCLASSIFIED NON-SAFEGUARDS INFORMATION IN THIS PROCEEDING

Day	Event/activity
0	Publication of FEDERAL REGISTER notice of hearing and opportunity to petition for leave to intervene, including order with instructions for access requests.
10	Deadline for submitting requests for access to Sensitive Unclassified Non-Safeguards Information (SUNSI) with information: Supporting the standing of a potential party identified by name and address; describing the need for the information in order for the potential party to participate meaningfully in an adjudicatory proceeding.
60	Deadline for submitting petition for intervention containing: (i) Demonstration of standing; (ii) all contentions whose formulation does not require access to SUNSI (+25 Answers to petition for intervention; +7 petitioner/requestor reply).
20	Nuclear Regulatory Commission (NRC) staff informs the requester of the staff's determination whether the request for access provides a reasonable basis to believe standing can be established and shows need for SUNSI. (NRC staff also informs any party to the proceeding whose interest independent of the proceeding would be harmed by the release of the information.) If NRC staff makes the finding of need for SUNSI and likelihood of standing, NRC staff begins document processing (preparation of redactions or review of redacted documents).
25	If NRC staff finds no "need" or no likelihood of standing, the deadline for petitioner/requester to file a motion seeking a ruling to reverse the NRC staff's denial of access; NRC staff files copy of access determination with the presiding officer (or Chief Administrative Judge or other designated officer, as appropriate). If NRC staff finds "need" for SUNSI, the deadline for any party to the proceeding whose interest independent of the proceeding would be harmed by the release of the information to file a motion seeking a ruling to reverse the NRC staff's grant of access.
30	Deadline for NRC staff reply to motions to reverse NRC staff determination(s).

[2] Any motion for Protective Order or draft Non-Disclosure Affidavit or Agreement for SUNSI must be filed with the presiding officer or the Chief Administrative Judge if the presiding officer has not yet been designated, within 30 days of the deadline for the receipt of the written access request.

[3] Requesters should note that the filing requirements of the NRC's E-Filing Rule (72 FR 49139; August 28, 2007) apply to appeals of NRC staff determinations (because they must be served on a presiding officer or the Commission, as applicable), but not to the initial SUNSI request submitted to the NRC staff under these procedures.

ATTACHMENT 1—GENERAL TARGET SCHEDULE FOR PROCESSING AND RESOLVING REQUESTS FOR ACCESS TO SENSITIVE UNCLASSIFIED NON-SAFEGUARDS INFORMATION IN THIS PROCEEDING—Continued

Day	Event/activity
40	(Receipt +30) If NRC staff finds standing and need for SUNSI, deadline for NRC staff to complete information processing and file motion for Protective Order and draft Non-Disclosure Affidavit. Deadline for applicant/licensee to file Non-Disclosure Agreement for SUNSI.
	If access granted: Issuance of presiding officer or other designated officer decision on motion for protective order for access to sensitive information (including schedule for providing access and submission of contentions) or decision reversing a final adverse determination by the NRC staff.
A + 3	Deadline for filing executed Non-Disclosure Affidavits. Access provided to SUNSI consistent with decision issuing the protective order.
A + 28	Deadline for submission of contentions whose development depends upon access to SUNSI. However, if more than 25 days remain between the petitioner's receipt of (or access to) the information and the deadline for filing all other contentions (as established in the notice of hearing or opportunity for hearing), the petitioner may file its SUNSI contentions by that later deadline.
A + 53	(Contention receipt +25) Answers to contentions whose development depends upon access to SUNSI.
A + 60	(Answer receipt +7) Petitioner/Intervenor reply to answers.
>A + 60	Decision on contention admission.

[FR Doc. 2010–18240 Filed 7–23–10; 8:45 am]

BILLING CODE 7590–01–P

NUCLEAR REGULATORY COMMISSION

[Docket Nos. 52–031 and 52–032; NRC–2008–0542]

Exelon Generation Company, LLC; Victoria County Station, Units 1 and 2; Notice of Withdrawal of Application for a Combined License

By letter dated September 2, 2008, Exelon Nuclear Texas Holdings, LLC, (Exelon) submitted an application for a combined license (COL) for two Economic Simplified Boiling Water Reactor (ESBWR) units to the U.S. Nuclear Regulatory Commission (the Commission) in accordance with the requirements contained in 10 CFR part 52, "Licenses, Certifications and Approvals for Nuclear Power Plants." Exelon identified these reactors as Victoria County Station, Units 1 and 2.

A notice acknowledging receipt and availability of this application was published in the **Federal Register** (73 FR 56867) on September 30, 2008. On November 6, 2008, a subsequent notice was published in the **Federal Register** (73 FR 66059) announcing the acceptance of the Victoria County Station, Units 1 and 2 COL application for docketing in accordance with 10 CFR part 2, "Rules of Practice for Domestic Licensing Proceedings and Issuance of Orders," and 10 CFR part 52. The docket numbers established for this application are 52–031 (Unit 1) and 52–032 (Unit 2).

By letter dated June 11, 2010, Exelon requested that the Victoria County Station, Units 1 and 2 COL application be withdrawn from the docket. Pursuant to the requirements in 10 CFR part 2, the Commission grants Exelon its request to withdraw the Victoria County Station, Units 1 and 2, COL application.

For further details with respect to this action, see the licensee's letters dated November 28, 2008 and July 1, 2009. Documents may be examined, and/or copied for a fee, at the NRC's Public Document Room (PDR), located at One White Flint North, Public File Area O1 F21, 11555 Rockville Pike (first floor), Rockville, Maryland. Publicly available records are accessible electronically from the Agencywide Documents Access and Management System (ADAMS) Public Electronic Reading Room on the Internet at the NRC Web site, *http://www.nrc.gov/reading-rm/adams.html.* Persons who do not have access to ADAMS or who encounter problems in accessing the documents located in ADAMS should contact the NRC PDR Reference staff by telephone at 1–800–397–4209, or 301–415–4737 or by e-mail to *pdr.resource@nrc.gov.*

Dated at Rockville, Maryland, this 20th day of July 2010.

For the Nuclear Regulatory Commission.

David B. Matthews,

Director, Division of New Reactor Licensing, Office of New Reactors.

[FR Doc. 2010–18230 Filed 7–23–10; 8:45 am]

BILLING CODE 7590–01–P

OFFICE OF PERSONNEL MANAGEMENT

Privacy Act of 1974; Computer Matching Program Between the Office of Personnel Management and Social Security Administration

AGENCY: Office of Personnel Management (OPM).

ACTION: Notice—computer matching between the Office of Personnel Management and the Social Security Administration.

SUMMARY: In accordance with the Privacy Act of 1974 (5 U.S.C. 552a), as amended by the Computer Matching and Privacy Protection Act of 1988 (Pub. L. 100–503), Office of Management and Budget (OMB) Guidelines on the Conduct of Matching Programs (54 FR 25818 published June 19, 1989), and OMB Circular No. A–130, revised November 28, 2000, "Management of Federal Information Resources," the Office of Personnel Management (OPM) is publishing notice of its new computer matching program with the Social Security Administration (SSA).

DATES: OPM will file a report of the subject matching program with the Committee on Homeland Security and Governmental Affairs of the Senate, the Committee on Oversight and Government Reform of the House of Representatives and the Office of Information and Regulatory Affairs, Office of Management and Budget (OMB). The matching program will begin 30 days after the Federal Register notice has been published or 40 days after the date of OPM's submissions of the letters to Congress and OMB, whichever is later. The matching program will continue for 18 months from the beginning date and may be extended an additional 12 months thereafter. Subsequent matches will run until one of the parties advises the other in writing of its intention to reevaluate, modify and/or terminate the agreement.

ADDRESSES: Send comments to Marc Flaster, Chief, Resource Management, Retirement and Benefits, Office of Personnel Management, Room 4332, 1900 E. Street, NW., Washington, DC 20415.

FOR FURTHER INFORMATION CONTACT: James Sparrow on (202) 606–1803.

SUPPLEMENTARY INFORMATION:

A. General

The Privacy Act (5 U.S.C. 552a), as amended, establishes the conditions under which computer matching involving the Federal government could be performed and adding certain protections for individuals applying for and receiving Federal benefits. Section 7201 of the Omnibus Budget Reconciliation Act of 1990 (Pub. L. 101–508) further amended the Privacy Act regarding protections for such individuals.

The Privacy Act, as amended, regulates the use of computer matching by Federal agencies when records in a system of records are matched with other Federal, State, or local government records. Among other things, it requires Federal agencies involved in computer matching programs to:

(1) Negotiate written agreements with the other agency for agencies participating in the matching programs;

(2) Obtain the approval of the match agreement by the Data Integrity Boards (DIB) of the participating Federal agencies;

(3) Furnish detailed reports about matching programs to Congress and OMB;

(4) Notify applicants and beneficiaries that their records are subject to matching;

(5) Verify match findings before reducing, suspending, termination or denying and individual's benefits or payments.

B. OPM Computer Matches Subject to the Privacy Act

We have taken action to ensure that all of OPM's computer matching programs comply with the requirements of the Privacy Act, as amended.

Notice of Computer Matching Program, Office of Personnel Management (OPM) With the Social Security Administration (SSA)

A. Participating Agencies

OPM and SSA

B. Purpose of the Matching Program

The purpose of this agreement is to establish the terms, conditions and safeguards for disclosure of Social Security benefit information to OPM via direct computer link for the administration of certain programs by OPM's Retirement & Benefits. OPM is legally required to offset specific benefits by a percentage of benefits (*i.e.* Disability Annuitants, Children Survivor Annuitants and Spousal Survivor Annuitants) payable under Title II of the Social Security Act. This matching activity will enable OPM to compute benefits at the correct rate and determine eligibility for these benefits.

C. Authority for Conducting the Matching Program

Section 8461(h) of title 5 of the United States Code.

D. Categories of Records and Individuals Covered by the Match

Under the matching program, OPM will match SSA's disability insurance benefits (DIB) and payment date against OPM's records of retirees receiving a FERS disability annuity. The purpose of the matching program is to identify a person receiving both a FERS disability annuity and a DIB under Section 223 of the Social Security Act, 42 U.S.C. 423, in order to apply OPM offsets. Under FERS, 5 U.S.C. 8452(a)(2)(A), for any month in which an annuitant is entitled to both a FERS disability annuity and to a DIB, the FERS annuity shall be computed as follows: the FERS disability annuity is reduced, for any month during the first year after the individual's FERS disability annuity commences or is restored, by 100% of the individual's assumed Social Security DIB for such month, and, for any month occurring during a period other than the period described above, by 60% of the individual's assumed Social Security DIB for such month. OPM will provide SSA with an extract from the Annuity Master File and from pending claims snapshot records via the File Transfer Management System (FTMS). The extracted file will contain identifying information concerning the child survivor annuitant for whom OPM needs information concerning receipt of SSA child survivor benefits: full name, Social Security Number, date of birth, and type of information requested, as required to extract data from the SSA State Verification and Exchange System Files for Title II records. Each record on the OPM file will be matched to SSA's records to identify FERS child survivor annuitants who are receiving SSA CIBs. The SSA systems of records involved in this CMA are the Enumeration System, 60–0058 and the MBR, 60–0090. OPM's system of records involved in this matching program is designated OPM/Central-1, Civil Service Retirement and Insurance Records. For records from OPM/Central-1, notice was provided by the publication of the system of records in the **Federal Register** at 64 FR 54930 (Oct. 8, 1999), as amended at 65 FR 2772 (May 3, 2000), updated at 72 FR 60041 (October 23, 2007), and amended at 73 FR 15013 (March 20, 2008).

OPM's records of surviving spouses who may be eligible to receive the FERS Supplementary Annuity will be matched against SSA's mother or father's insurance benefit and/or disabled widow (er)'s insurance benefit records. If the surviving spouse is receiving one of the above e-described Social Security benefits, he or she is not eligible to receive the FERS Supplementary Annuity. FERS, 5 U.S.C. 8442 (f) provides that a survivor who is entitled to a survivor's annuity and who meets certain other statutory requirements shall also be entitled to a Supplementary Annuity. To be eligible to receive a Supplementary Annuity for a given month, the surviving spouse of a deceased FERS annuitant must be eligible for a FERS survivor annuity, be under age 60, be an individual who would be entitled to widow's or widower's insurance benefits under the requirements of sections 202(e) and 402(f), based on the wages and self employment survivor had attained age 60 and otherwise satisfied necessary requirements for widow's or widower's insurance benefits. *See* 5 U.S.C 8442(f)(4)(B). The individual must not be eligible for Social Security mother's or father's insurance benefits or disabled widow (er)'s insurance benefits based on the deceased annuitant's wages and self-employment income.

E. Privacy Safeguards and Security

The Privacy Act (5 U.S.C. 552a(o)(1)(G) requires that each matching agreement specify procedures for ensuring the administrative, technical and physical security of the records matched and the results of such programs. All Federal agencies are subject to: the Federal Information Security Management Act of 2002 (FISMA) (44 U.S.C. 3541 *et seq.*); related OMB circulars and memoranda (*e.g.* OMB Circular A–130 and OMB M–06–16); National Institute of Science and Technology (NIST) directives; and the Federal Acquisition Regulations (FAR). These laws, circulars, memoranda, directives, and regulations include requirements for safeguarding Federal information systems and personally identifiable information used in Federal agency business processes, as well as related reporting requirements. OPM and SSA recognize that all laws, circulars, memoranda, directives and regulations relating to the subject of this agreement and published subsequent to the effective date of this agreement must also be implemented if mandated.

FISMA requirements apply to all Federal contractors and organizations or sources that process or use Federal information, or that operate, use, or have access to Federal information systems on behalf of an agency. OPM will be responsible for oversight and

compliance of their contractors and agents. Both OPM and SSA reserve the right to conduct onsite inspection to monitor compliance with FISMA regulations.

F. Inclusive Dates of the Match

The matching program shall become effective upon the signing of the agreement by both parties to the agreement and approval of the agreement by the Data Integrity Boards of the respective agencies, but no sooner that 40 days after notice of the matching program is sent to Congress and the Office of Management and Budget or 30 days after publication of this notice in the **Federal Register**, whichever is later. The matching program will continue for 18 months from the effective date and may be extended for an additional 12 months thereafter, if certain conditions are met.

U.S. Office of Personnel Management.

John Berry,

Director.

[FR Doc. 2010–18152 Filed 7–23–10; 8:45 am]

BILLING CODE 6325–38–P

POSTAL REGULATORY COMMISSION

[Docket Nos. MC2010–26, CP2010–67 and CP2010–68; Order No. 491]

New Postal Product

AGENCY: Postal Regulatory Commission.

ACTION: Notice.

SUMMARY: The Commission is noticing a recently-filed Postal Service filing to add Global Plus 1A Contracts (CP2008–9 and CP2008–10) to the competitive product list. The Postal Service has also filed related contracts. This notice addresses procedural steps associated with the filing.

DATES: Comments are due: July 26, 2010.

ADDRESSES: Submit comments electronically via the Commission's Filing Online system at *http://www.prc.gov.* Commenters who cannot submit their views electronically should contact the person identified in the **FOR FURTHER INFORMATION CONTACT** section by telephone for advice on alternatives to electronic filing.

FOR FURTHER INFORMATION CONTACT: Stephen L. Sharfman, General Counsel, *stephen.sharfman@prc.gov* or 202–789–6820.

SUPPLEMENTARY INFORMATION:

Table of Contents

I. Introduction
II. Notice of Filing
III. Ordering Paragraphs

I. Introduction

The Postal Service seeks to add a new product, Global Plus 1A, to the competitive product list and, to that end, filed notice, pursuant to 39 CFR 3015.5, announcing that it has entered into two Global Plus 1A contracts.[1] The Postal Service states that the instant contracts are functionally equivalent with one another and to previously submitted Global Plus 1 contracts.[2] It states further that the instant contracts are supported by Governors' Decision No. 08–8, which establishes prices and classifications not of general applicability for Global Plus Contracts.[3]

While the Postal Service's filing was not submitted pursuant to 39 CFR 3020.30 *et seq.*, it appears to request the addition of a new product to the competitive product list. Docket No. MC2010–28 is established to consider this as part of the filing.

The Postal Service contemporaneously filed copies of the contracts related to the proposed competitive product classification pursuant to 39 U.S.C. 3632(b)(3) and 39 CFR 3015.5. The two contracts have been assigned Docket Nos. CP2010–67 and CP2010–68, respectively.

The instant contracts. The Postal Service filed the instant contracts pursuant to 39 CFR 3015. The Postal Service states that the instant contracts are the immediate successors to those in Docket Nos. CP2009–46 and CP2009–47 that are scheduled to expire July 31, 2010. Notice at 2–3. The instant contracts are expected to begin August 1, 2010, and expire on the day prior to the day of any changes in the published rates that affect the Qualifying Mail subject to the contracts. *Id.* at 3–4.[4]

The Postal Service filed copies of the contracts, Governors' Decision with attachments, and supporting financial documentation under seal. *Id.* at 3.

Additionally, in support of its Notice, the Postal Service filed the following five attachments:

1. Attachment 1—a statement of supporting justification required by 39 CFR 3020.32;
2. Attachments 2A and 2B—a redacted copy of each contract and applicable annexes;
3. Attachments 3A and 3B—a certified statement required by 39 CFR 3015.5(c)(2);
4. Attachment 4—a redacted copy of Governors' Decision No. 08–8, which establishes prices and classifications for Global Plus Contracts, formulas for the prices, analysis and certification of the formulas and certification of the Governors' vote; and
5. Attachment 5—an application for non-public treatment of materials to maintain the contract and supporting documents under seal.

Functional equivalence. The Postal Service asserts that the instant contracts are functionally equivalent both to one another and to the precursor Global Plus 1 contracts in that they share similar cost and market characteristics. *Id.* at 4. It contends as a result the instant contracts should be grouped together as a single product. *Id.*

The Postal Service addresses similarities between the instant contracts and their predecessors, *e.g.,* that the customers are the same and the fundamental terms and conditions of the contracts remain essentially unchanged. *Id.* at 5. In addition, the Postal Service identifies what it characterizes as material changes in the contracts, *e.g.,* term, price incentives, and minimum weight. The Postal Service asserts that the differences do not affect either the service provided or the structure of the contracts. *Id.* at 5–7.

Baseline treatment. The Postal Service states that each of the instant contracts takes the place of its immediate predecessor which served as the baseline contracts for the Global Plus 1 Contracts product.[5] It requests that the instant contracts be considered "the new 'baseline' agreements for consideration of future such agreements functional equivalency." *Id.* at 9.

Filing under part 3020. In support of its filing, the Postal Service submitted, as Attachment 1, a Statement of Supporting Justification. The Postal Service asserts that analysis under 39

[1] Notice of the United States Postal Service of Filing Two Functionally Equivalent Global Plus 1A Contracts Negotiated Service Agreements, July 13, 2010 (Notice); *see also* Errata to Notice of the United States Postal Service of Filing Two Functionally Equivalent Global Plus 1A Contracts Negotiated Service Agreements, July 14, 2010; Notice of the United States Postal Service of Filing a Signed Global Plus 1A Negotiated Service Agreement, July 15, 2010.

[2] *See* Docket Nos. CP2008–8 through CP2008–10, Order Concerning Global Plus Negotiated Service Agreements, June 27, 2008 (Order No. 85).

[3] *See* Docket No. CP2008–8, Notice of United States Postal Service of Governors' Decision Establishing Prices and Classifications for Global Plus Contracts, June 2, 2008, at 1.

[4] The Postal Service has filed copies of contracts that have not been signed by Postal Service representatives or the mailer. The Commission directs the Postal Service to file executed copies of these contracts as soon as possible.

[5] *See* Docket No. CP2009–46, Order Concerning Filing a Functionally Equivalent Global Plus 1 Contract Negotiated Service Agreement, July 31, 2009 at 7; *see also* Docket No. CP2009–47, Order Concerning Filing a Functionally Equivalent Global Plus 1 Contract Negotiated Service Agreement, August 3, 2009, at 7.

U.S.C. 3642(b) is unnecessary here because of the Commission findings in Order No. 43 that Negotiated Service Agreements for outbound International Mail are classified as competitive. Further, it asserts that the instant MC docket (MC2010–26) is merely a technicality "and does not involve a substantively new product requiring fresh review." *Id.* at 8.

The Postal Service contends that its filings demonstrate that the instant contracts comply with the requirements of 39 U.S.C. 3633, fit within the Mail Classification Schedule language for Global Plus 1 Contracts and are functionally equivalent to each other. *Id.* at 9. It urges the Commission to add Global Plus 1A Contracts to the competitive product list. *Id.*

II. Notice of Filing

The Commission establishes Docket Nos. MC2010–26, CP2010–67 and CP2010–68 for consideration of matters raised in the Postal Service's Notice.

Interested persons may submit comments on whether the Postal Service's filings in the captioned dockets are consistent with the policies of 39 U.S.C. 3632, 3633, or 3642, 39 CFR part 3015, and 39 CFR 3020 subpart B. Comments are due no later than July 26, 2010. The public portions of these filings can be accessed via the Commission's Web site (*http://www.prc.gov*).

The Commission appoints Paul L. Harrington to serve as Public Representative in these dockets.

III. Ordering Paragraphs

It is ordered:

1. The Commission establishes Docket Nos. MC2010–26, CP2010–67 and CP2010–68 for consideration of matters raised by the Postal Service's Request.

2. Comments by interested persons in these proceedings are due no later than July 26, 2010.

3. Pursuant to 39 U.S.C. 505, Paul L. Harrington is appointed to serve as the officer of the Commission (Public Representative) to represent the interests of the general public in these proceedings.

4. The Secretary shall arrange for publication of this order in the **Federal Register.**

By the Commission.

Shoshana M. Grove

Secretary.

[FR Doc. 2010–18163 Filed 7–23–10; 8:45 am]

BILLING CODE 7710–FW–S

SECURITIES AND EXCHANGE COMMISSION

[Release No. 34–62514; File No. SR–EDGA–2010–02]

Self-Regulatory Organizations; EDGA Exchange, Inc.; Order Approving a Proposed Rule Change Relating to Direct Edge, Inc.

July 16, 2010.

I. Introduction

On June 3, 2010, EDGA Exchange, Inc. ("EDGA" or "Exchange") filed with the Securities and Exchange Commission ("Commission"), pursuant to Section 19(b)(1) of the Securities Exchange Act of 1934 (the "Act"),[1] and Rule 19b–4 thereunder,[2] a proposed rule change relating to a corporate reorganization ("Corporate Reorganization") in which the Exchange will become a wholly-owned subsidiary of Direct Edge, Inc. ("DEI"). The proposed rule change was published for comment in the **Federal Register** on June 16, 2010.[3] The Commission received no comments regarding the proposal. This order approves the proposed rule change.

II. Description of the Proposal

Currently, the Exchange is a wholly-owned subsidiary of Direct Edge Holdings, LLC ("DE Holdings").[4] DE Holdings, a Delaware limited liability company, is overseen by a Board of Managers, and ownership in DE Holdings is represented by limited liability membership interests. The Fourth Amended and Restated Limited Liability Company Operating Agreement of DE Holdings ("DE Holdings Operating Agreement") refers to the holders of these membership interests as "Members."[5]

The Exchange proposes a Corporate Reorganization in which DE Holdings will transfer all of its equity interest in the Exchange to DEI, a Delaware corporation.[6] As a result, the Exchange will be a direct, wholly-owned subsidiary of DEI following the Corporate Reorganization. DEI, in turn, will be a direct, wholly-owned subsidiary of DE Holdings, and DE Holdings will be the sole stockholder of DEI. The self-regulatory functions of the Exchange will remain with the Exchange following the Corporate Reorganization. Direct Edge ECN, LLC d/b/a DE Route, the Exchange's routing broker/dealer, will continue to be a wholly-owned subsidiary of DE Holdings.

The Exchange has included in its proposal the Certificate of Incorporation of DEI ("DEI Certificate"); the Bylaws of DEI ("DEI Bylaws"); and changes to the Amended and Restated Bylaws of EDGX ("Exchange Bylaws") to indicate that DEI will be the sole stockholder of the Exchange.

III. Discussion and Commission Findings

The Commission finds that the proposed rule change is consistent with the requirements of the Act and the rules and regulations thereunder applicable to a national securities exchange.[7] In particular, the Commission finds that the proposal is consistent with Section 6(b) of the Act,[8] in general, and furthers the objectives of Section 6(b)(1) of the Act,[9] in particular, in that it is designed to enable the Exchange to be so organized as to have the capacity to be able to carry out the purposes of the Act and to comply, and to enforce compliance by its members and persons associated with its members with the provisions of the Act, the rules and regulations thereunder, and the rules of the Exchange. In addition, the Commission finds that the proposal is consistent with Section 6(b)(5) of the Act[10] in that it will result in an exchange governance structure designed to prevent fraudulent and manipulative acts and practices, to promote just and equitable principles of trade, to remove impediments to and perfect the mechanism of a free and open market and a national market system, and, in general, to protect investors and the public interest. In particular, the Commission believes that

[1] 15 U.S.C. 78s(b)(1).

[2] 17 CFR 240.19b–4.

[3] *See* Securities Exchange Act Release No. 62255 (June 10, 2010), 75 FR 34189.

[4] The Amended and Restated Bylaws of EDGA ("Exchange Bylaws") identify this ownership structure. *See* Exchange Bylaws, Article I(kk). Any changes to the Exchange Bylaws, including a change to the provision that identifies DE Holdings as the sole owner of the Exchange, must be filed with the Commission pursuant to Section 19 of the Act. *See* 15 U.S.C. 78s. *See also* Securities Exchange Act Release No. 61698 (March 12, 2010), 75 FR 13151 (March 18, 2010) (File Nos. 10–194 and 10–196) (order granting the exchange registration applications of the Exchange and EDGX Exchange, Inc. ("EDGX")) ("Order"), at note 77 and accompanying text.

[5] DE Holdings is described in greater detail in the Order, *supra* note 4.

[6] The Exchange's affiliate exchange, EDGX, also will become a wholly-owned subsidiary of DEI. *See* Securities Exchange Act Release No. 62515 (July 16, 2010) (order approving File No. SR–EDGX–2010–02).

[7] In approving this proposed rule change, the Commission has considered the proposed rule's impact on efficiency, competition, and capital formation. 15 U.S.C. 78c(f).

[8] 15 U.S.C. 78f(b).

[9] 15 U.S.C. 78f(b)(1).

[10] 15 U.S.C. 78f(b)(5).

the corporate governing documents of DEI, DE Holdings, and the Exchange are designed to protect and maintain the integrity of the self-regulatory functions of the Exchange and to facilitate the ability of the Exchange and the Commission to carry out their regulatory and oversight obligations under the Act. Finally, the Commission finds that the proposal is consistent with the requirement under Section 6(b)(3) of the Act[11] that the rules of an exchange assure fair representation of the exchange's members in the selection of its directors and administration of its affairs.

A. DEI

Following the Corporate Reorganization, DEI will be the sole stockholder of the Exchange.[12] Although DEI will not carry out any regulatory functions, its activities with respect to the operation of the Exchange must be consistent with, and must not interfere with, the self-regulatory obligations of the Exchange. The DEI Certificate and DEI Bylaws include certain provisions that are designed to maintain the independence of the Exchange's self-regulatory function from DEI, enable the Exchange to operate in a manner that complies with the Federal securities laws, including the objectives of Sections 6(b) and 19(g) of the Act,[13] and facilitate the ability of the Exchange and the Commission to fulfill their regulatory and oversight obligations under the Act.

For example, DEI submits to the jurisdiction of the Commission and the Exchange with respect to activities relating to the Exchange,[14] and agrees to provide the Commission and the Exchange with access to its books and records that are related to the operation or administration of the Exchange.[15] In addition, to the extent they are related to the operation or administration of the Exchange, the books, records, premises, officers, directors, agents, and employees of DEI will be deemed to be the books, records, premises, officers, directors, agents, and employees of the Exchange for the purpose of, and subject to oversight pursuant to, the Act.[16] DEI also agrees to keep confidential non-public information relating to the self-regulatory function[17] of the Exchange and not to use such information for any non-regulatory purpose.[18] In addition, the Board of Directors of DEI, and DEI's officers, employees, and agents, are required to give due regard to the preservation of the independence of the self-regulatory function of the Exchange.[19]

Article VII, Section 7.7 of the DE Holdings Operating Agreement requires the approval of the DE Holdings Board of Managers and/or Members of DE Holdings in connection with certain actions taken by DE Holdings or a subsidiary of DE Holdings. Article SIXTH of the DEI Certificate states that any action that specifically requires the approval of the DE Holdings Board of Managers and/or Members of DE Holdings pursuant to Article VII, Section 7.7 of the DE Holdings Operating Agreement will require the approval of the stockholders of DEI.[20] Article SIXTH of the DEI Certificate further provides, however, that nothing contained in Article VII, Section 7.7 of the DE Holdings Operating Agreement will be applicable where the application of that provision would interfere with the effectuation of any decisions of the DEI Board of Directors ("DEI Board") relating to regulatory functions of the Exchange (including disciplinary matters) or the structure of the market the Exchange regulates, or would interfere with the ability of the Exchange to carry out its responsibilities under the Act or to oversee the structure of the market the Exchange regulates.[21] For as long as DEI directly or indirectly controls the Exchange, any change to the DEI Certificate must be submitted to the Exchange's Board of Directors ("Exchange Board") and, if the amendment is required to be filed with the Commission pursuant to Section 19(b) of the Act, the change will not be effective until filed with, or filed with and approved by, the Commission.[22]

The Commission finds that these provisions in the DEI Bylaws and DEI Certificate are consistent with the Act, and that they will assist the Exchange in fulfilling its self-regulatory obligations and in administering and complying with the requirements of the Act.

B. DE Holdings

In the Corporate Reorganization, DE Holdings, which currently is the sole stockholder of the Exchange, will transfer its stock in the Exchange to DE Holdings' wholly-owned subsidiary, DEI, which will become the sole stockholder of the Exchange. Accordingly, DE Holdings will be an indirect owner of the Exchange following the Corporate Reorganization. Although DE Holdings will not carry out any regulatory functions, its activities with respect to the operation of the Exchange must be consistent with, and not interfere with, the self-regulatory obligations of the Exchange.

The DE Holdings Operating Agreement, which the Commission reviewed in connection with the Exchange's application for registration as a national securities exchange,[23] includes certain provisions that are designed to maintain the independence of the Exchange's self-regulatory function from DE Holdings, enable the Exchange to operate in a manner that complies with the Federal securities laws, including the objectives of Sections 6(b) and 19(g) of the Act, and facilitate the ability of the Exchange and the Commission to fulfill their regulatory and oversight obligations under the Act. For example, the DE Holdings Operating Agreement provides that, for so long as DE Holdings directly or indirectly controls the Exchange, the Managers, officers, employees, and agents of DE Holdings shall give due regard to the preservation of the independence of the self-regulatory function of the Exchange and shall not take any actions that would interfere with the effectuation of any decisions by the Exchange Board relating to the Exchange's regulatory functions (including disciplinary matters) or which would interfere with the ability of the Exchange to carry out its responsibilities under the Act.[24]

[11] 15 U.S.C. 78f(b)(3).

[12] *See* Exchange Bylaws, Article I(kk).

[13] 15 U.S.C. 78f(b) and 15 U.S.C. 78s(g).

[14] *See* DEI Bylaws, Article VII, Section 7.3.

[15] *See* DEI Bylaws, Article V, Section 5.8(b).

[16] *Id.*

[17] This requirement to keep confidential non-public information relating to the self-regulatory function of the Exchange will not limit the Commission's or the Exchange's ability to access and examine such information or limit the ability of any officers, directors, agents, or employees of DEI to disclosure such information to the Commission or to the Exchange. *See* DEI Bylaws, Article V, Section 5.8(a).

[18] *See* DEI Bylaws, Article VII, Section 7.1.

[19] *See* DEI Bylaws, Article V, Section 5.8(b).

[20] *See* DEI Certificate, Article SIXTH(1).

[21] *See* DEI Certificate, Article SIXTH(2).

[22] *See* DEI Certificate, Article EIGHTH(3).

[23] *See* Order, *supra* note 4.

[24] *See* DE Holdings Operating Agreement Article XIV, Section 14.1. In addition, the DE Holdings Operating Agreement further specifies, among other things, that: (1) DE Holdings and its officers, Managers, employees, and agents submit to the Commission's and the Exchange's jurisdiction with respect to activities relating to the Exchange; (2) DE Holdings agrees to retain in confidence information in the books and records of the Exchange reflecting confidential information pertaining to the self-regulatory function of the Exchange (including disciplinary matters, trading data, trading practices, and audit information) that comes into DE Holdings' possession; (3) the books, records, premises, officers, Managers, agents, and employees of DE Holdings are deemed to be the books, records, premises, officers, Managers, agents, and employees of the Exchange for purposes of, and subject to oversight pursuant to, the Act, to the extent that

Continued

The Commission notes that the Exchange is not proposing to amend the DE Holdings Operating Agreement.[25] Accordingly, the DE Holdings Operating Agreement that the Commission reviewed in connection with the Exchange's application for registration as a national securities exchange, including the provisions in the DE Holdings Operating Agreement relating to the self-regulatory function of the Exchange, will remain in place following the Corporate Reorganization.

C. Ownership and Control of the Exchange, DEI, and DE Holdings

Following the Corporate Reorganization, DEI will be the sole stockholder of the Exchange. The Exchange Bylaws identify this ownership structure.[26] Any changes to the Exchange Bylaws, including any change in the provision that identifies DEI as the sole stockholder of the Exchange, must be filed with and approved by the Commission pursuant to Section 19 of the Act.[27] Similarly, the DEI Certificate identifies DE Holdings as the sole stockholder of DEI.[28] For as long as DEI directly or indirectly controls the Exchange, any amendment to the DEI Certificate, including an amendment to the provision that identifies DE Holdings as the sole stockholder of DEI, must be submitted to the Exchange Board and, if the Exchange Board determines that the amendment must be filed with, or filed with and approved by the Commission, before the amendment may be effective under Section 19 of the Act, then the proposed amendment will not be effective until it is filed with, or filed with and approved by, the Commission.[29]

In addition, as discussed in greater detail in the Order,[30] the DE Holdings Operating Agreement includes restrictions on the ability to own and vote the capital stock of DE Holdings.[31] These limitations apply for so long as DE Holdings directly or indirectly controls the Exchange.[32] The limitations, which are designed to prevent any Member of DE Holdings from exercising undue control over the operation of the Exchange and to assure that the Exchange and the Commission are able to effectively carry out their regulatory and oversight obligations under the Act, generally prohibit any person, other than International Securities Exchange Holdings, Inc., from owning interests representing more than 40% of DE Holdings or from voting interests representing more than 20% of DE Holdings. In addition, the limitations prohibit any member of the Exchange from owning interests representing more than 20% of DE Holdings.

The Commission believes that these provisions in the governing documents of the Exchange, DEI, and DE Holdings should minimize the potential that a person could improperly interfere with or restrict the ability of the Commission or the Exchange to effectively carry out their regulatory and oversight responsibilities under the Act.

D. Electing Directors and Certain Committee Members of the Exchange

Currently, the DE Holdings Operating Agreement requires DE Holdings, in its capacity as the sole stockholder of the Exchange, to vote all of the outstanding equity of the Exchange owned by DE Holdings and entitled to vote in an election to be voted in favor of the election of (1) those directors nominated by the Nominating Committee of the Exchange ("Exchange Nominating Committee"); and (2) those nominees for the Exchange Nominating Committee and the Exchange Member Nominating Committee nominated in accordance with the governance documents of the Exchange.[33] Because DE Holdings will no longer be a stockholder of the Exchange following the Corporate Reorganization, the Exchange notes that these requirements will no longer apply to DE Holdings.

However, the DEI Bylaws require DEI, in its capacity as the sole stockholder of the Exchange, to cause all outstanding equity of the Exchange owned by DEI and entitled to vote in an election to be voted in favor of the election of (1) those directors nominated by the Exchange Nominating Committee; and (2) those nominees for the Exchange Nominating Committee and the Exchange Member Nominating Committee nominated in accordance with the governance documents of the Exchange.[34] Through these requirements in the DEI Bylaws, the Commission believes that the same procedures governing the election of Exchange directors and Exchange member directors that the Commission approved in the Order will continue to apply following the Corporate Reorganization.[35] Accordingly, the Commission finds that the proposal is consistent with the requirement in Section 6(b)(3) of the Act that the rules of the Exchange provide for the fair representation of its members in the selection of directors and the administration of the Exchange.

IV. Conclusion

It is therefore ordered, pursuant to Section 19(b)(2) of the Act,[36] that the proposed rule change (File No. SR–ED[37]GA–2010–02) is approved.

For the Commission, by the Division of Trading and Markets, pursuant to delegated authority.

Florence E. Harmon,

Deputy Secretary.

[FR Doc. 2010–18157 Filed 7–23–10; 8:45 am]

BILLING CODE 8010–01–P

they are related to the operation or administration of the Exchange; and (4) DE Holdings agrees to provide the Commission and the Exchange with access to DE Holdings' books and records that are related to the operation or administration of the Exchange for so long as DE Holdings directly or indirectly controls the Exchange. *See* DE Holdings Operating Agreement, Article XI, Section 14.3; and Article XI, Section 11.2. For a more complete discussion of the DE Holdings Operating Agreement, *see* Order, *supra* note 4, at notes 40—47 and accompanying text.

[25] For as long as DE Holdings directly or indirectly controls the Exchange, any changes to the DE Holdings Operating Agreement must be submitted to the Exchange Board and, if the Exchange Board determines that such amendment is required to be filed with the Commission pursuant to Section 19(b) of the Act, such change will not be effective until filed with, or filed with and approved by, the Commission. *See* DE Holdings Operating Agreement, Article XV, Section 15.2(b). *See also* Order, *supra* note 4, at note 47 and accompanying text.

[26] *See* Exchange Bylaws, Article I(kk).

[27] *See* 15 U.S.C. 78s.

[28] *See* DEI Certificate, Article EIGHTH(4).

[29] *See* DEI Certificate, Article EIGHTH(3).

[30] *See* Order, *supra* note 4, at notes 65–88 and accompanying text.

[31] *See* DE Holdings Operating Agreement, Article XII.

[32] *See* DE Holdings Operating Agreement, Article XII, Section 12.1(a).

[33] *See* DE Holdings Operating Agreement, Article VII, Section 7.3(b).

[34] *See* DEI Bylaws, Article II, Section 2.15(b).

[35] *See* Order, *supra* note 4, at notes 94—120 and accompanying text, for a discussion of the Exchange's procedures for nominating directors and Exchange member directors.

[36] 15 U.S.C. 78s(b)(2).

[37] 17 CFR 200.30–3(a)(12).

[1] 15 U.S.C. 78s(b)(1).

SECURITIES AND EXCHANGE COMMISSION

[Release No. 34–62515; File No. SR–EDGX–2010–02]

Self-Regulatory Organizations; EDGX Exchange, Inc; Order Approving a Proposed Rule Change Relating to Direct Edge, Inc.

July 16, 2010.

I. Introduction

On June 3, 2010, EDGX Exchange, Inc. ("EDGX" or "Exchange") filed with the Securities and Exchange Commission ("Commission"), pursuant to Section 19(b)(1) of the Securities Exchange Act of 1934 (the "Act"),[1] and Rule 19b–4

thereunder,[2] a proposed rule change relating to a corporate reorganization ("Corporate Reorganization") in which the Exchange will become a wholly-owned subsidiary of Direct Edge, Inc. ("DEI"). The proposed rule change was published for comment in the **Federal Register** on June 16, 2010.[3] The Commission received no comments regarding the proposal. This order approves the proposed rule change.

II. Description of the Proposal

Currently, the Exchange is a wholly-owned subsidiary of Direct Edge Holdings, LLC ("DE Holdings").[4] DE Holdings, a Delaware limited liability company, is overseen by a Board of Managers, and ownership in DE Holdings is represented by limited liability membership interests. The Fourth Amended and Restated Limited Liability Company Operating Agreement of DE Holdings ("DE Holdings Operating Agreement") refers to the holders of these membership interests as "Members."[5]

The Exchange proposes a Corporate Reorganization in which DE Holdings will transfer all of its equity interest in the Exchange to DEI, a Delaware corporation.[6] As a result, the Exchange will be a direct, wholly-owned subsidiary of DEI following the Corporate Reorganization. DEI, in turn, will be a direct, wholly-owned subsidiary of DE Holdings, and DE Holdings will be the sole stockholder of DEI. The self-regulatory functions of the Exchange will remain with the Exchange following the Corporate Reorganization. Direct Edge ECN, LLC d/b/a DE Route, the Exchange's routing broker/dealer, will continue to be a wholly-owned subsidiary of DE Holdings.

The Exchange has included in its proposal the Certificate of Incorporation of DEI ("DEI Certificate"); the Bylaws of DEI ("DEI Bylaws"); and changes to the Amended and Restated Bylaws of EDGX ("Exchange Bylaws") to indicate that DEI will be the sole stockholder of the Exchange.

III. Discussion and Commission Findings

The Commission finds that the proposed rule change is consistent with the requirements of the Act and the rules and regulations thereunder applicable to a national securities exchange.[7] In particular, the Commission finds that the proposal is consistent with Section 6(b) of the Act,[8] in general, and furthers the objectives of Section 6(b)(1) of the Act,[9] in particular, in that it is designed to enable the Exchange to be so organized as to have the capacity to be able to carry out the purposes of the Act and to comply, and to enforce compliance by its members and persons associated with its members with the provisions of the Act, the rules and regulations thereunder, and the rules of the Exchange. In addition, the Commission finds that the proposal is consistent with Section 6(b)(5) of the Act[10] in that it will result in an exchange governance structure designed to prevent fraudulent and manipulative acts and practices, to promote just and equitable principles of trade, to remove impediments to and perfect the mechanism of a free and open market and a national market system, and, in general, to protect investors and the public interest. In particular, the Commission believes that the corporate governing documents of DEI, DE Holdings, and the Exchange are designed to protect and maintain the integrity of the self-regulatory functions of the Exchange and to facilitate the ability of the Exchange and the Commission to carry out their regulatory and oversight obligations under the Act. Finally, the Commission finds that the proposal is consistent with the requirement under Section 6(b)(3) of the Act[11] that the rules of an exchange assure fair representation of the exchange's members in the selection of its directors and administration of its affairs.

A. DEI

Following the Corporate Reorganization, DEI will be the sole stockholder of the Exchange.[12] Although DEI will not carry out any regulatory functions, its activities with respect to the operation of the Exchange must be consistent with, and must not interfere with, the self-regulatory obligations of the Exchange. The DEI Certificate and DEI Bylaws include certain provisions that are designed to maintain the independence of the Exchange's self-regulatory function from DEI, enable the Exchange to operate in a manner that complies with the Federal securities laws, including the objectives of Sections 6(b) and 19(g) of the Act,[13] and facilitate the ability of the Exchange and the Commission to fulfill their regulatory and oversight obligations under the Act.

For example, DEI submits to the jurisdiction of the Commission and the Exchange with respect to activities relating to the Exchange,[14] and agrees to provide the Commission and the Exchange with access to its books and records that are related to the operation or administration of the Exchange.[15] In addition, to the extent they are related to the operation or administration of the Exchange, the books, records, premises, officers, directors, agents, and employees of DEI will be deemed to be the books, records, premises, officers, directors, agents, and employees of the Exchange for the purpose of, and subject to oversight pursuant to, the Act.[16] DEI also agrees to keep confidential non-public information relating to the self-regulatory function[17] of the Exchange and not to use such information for any non-regulatory purpose.[18] In addition, the Board of Directors of DEI, and DEI's officers, employees, and agents, are required to give due regard to the preservation of the independence of the self-regulatory function of the Exchange.[19]

Article VII, Section 7.7 of the DE Holdings Operating Agreement requires the approval of the DE Holdings Board of Managers and/or Members of DE Holdings in connection with certain actions taken by DE Holdings or a subsidiary of DE Holdings. Article

[2] 17 CFR 240.19b–4.

[3] *See* Securities Exchange Act Release No. 62256 (June 10, 2010), 75 FR 34196.

[4] The Amended and Restated Bylaws of EDGX ("Exchange Bylaws") identify this ownership structure. *See* Exchange Bylaws, Article I(kk). Any changes to the Exchange Bylaws, including a change to the provision that identifies DE Holdings as the sole owner of the Exchange, must be filed with the Commission pursuant to Section 19 of the Act. *See* 15 U.S.C. 78s. *See also* Securities Exchange Act Release No. 61698 (March 12, 2010), 75 FR 13151 (March 18, 2010) (File Nos. 10–194 and 10–196) (order granting the exchange registration applications of the Exchange and EDGA Exchange, Inc. ("EDGA")) ("Order"), at note 77 and accompanying text.

[5] DE Holdings is described in greater detail in the Order, *supra* note 4.

[6] The Exchange's affiliate exchange, EDGA, also will become a wholly-owned subsidiary of DEI. *See* Securities Exchange Act Release No. 62514 (July 16, 2010) (order approving File No. SR–EDGA–2010–02).

[7] In approving this proposed rule change, the Commission has considered the proposed rule's impact on efficiency, competition, and capital formation. 15 U.S.C. 78c(f).

[8] 15 U.S.C. 78f(b).

[9] 15 U.S.C. 78f(b)(1).

[10] 15 U.S.C. 78f(b)(5).

[11] 15 U.S.C. 78f(b)(3).

[12] *See* Exchange Bylaws, Article I(kk).

[13] 15 U.S.C. 78f(b) and 15 U.S.C. 78s(g).

[14] *See* DEI Bylaws, Article VII, Section 7.3.

[15] *See* DEI Bylaws, Article V, Section 5.8(b).

[16] *Id.*

[17] This requirement to keep confidential non-public information relating to the self-regulatory function of the Exchange will not limit the Commission's or the Exchange's ability to access and examine such information or limit the ability of any officers, directors, agents, or employees of DEI to disclose such information to the Commission or to the Exchange. *See* DEI Bylaws, Article V, Section 5.8(a).

[18] *See* DEI Bylaws, Article VII, Section 7.1.

[19] *See* DEI Bylaws, Article V, Section 5.8(b).

SIXTH of the DEI Certificate states that any action that specifically requires the approval of the DE Holdings Board of Managers and/or Members of DE Holdings pursuant to Article VII, Section 7.7 of the DE Holdings Operating Agreement will require the approval of the stockholders of DEI.[20] Article SIXTH of the DEI Certificate further provides, however, that nothing contained in Article VII, Section 7.7 of the DE Holdings Operating Agreement will be applicable where the application of that provision would interfere with the effectuation of any decisions of the DEI Board of Directors ("DEI Board") relating to regulatory functions of the Exchange (including disciplinary matters) or the structure of the market the Exchange regulates, or would interfere with the ability of the Exchange to carry out its responsibilities under the Act or to oversee the structure of the market the Exchange regulates.[21] For as long as DEI directly or indirectly controls the Exchange, any change to the DEI Certificate must be submitted to the Exchange's Board of Directors ("Exchange Board") and, if the amendment is required to be filed with the Commission pursuant to Section 19(b) of the Act, the change will not be effective until filed with, or filed with and approved by, the Commission.[22]

The Commission finds that these provisions in the DEI Bylaws and DEI Certificate are consistent with the Act, and that they will assist the Exchange in fulfilling its self-regulatory obligations and in administering and complying with the requirements of the Act.

B. DE Holdings

In the Corporate Reorganization, DE Holdings, which currently is the sole stockholder of the Exchange, will transfer its stock in the Exchange to DE Holdings' wholly-owned subsidiary, DEI, which will become the sole stockholder of the Exchange. Accordingly, DE Holdings will be an indirect owner of the Exchange following the Corporate Reorganization. Although DE Holdings will not carry out any regulatory functions, its activities with respect to the operation of the Exchange must be consistent with, and not interfere with, the self-regulatory obligations of the Exchange.

The DE Holdings Operating Agreement, which the Commission reviewed in connection with the Exchange's application for registration as a national securities exchange,[23] includes certain provisions that are designed to maintain the independence of the Exchange's self-regulatory function from DE Holdings, enable the Exchange to operate in a manner that complies with the Federal securities laws, including the objectives of Sections 6(b) and 19(g) of the Act, and facilitate the ability of the Exchange and the Commission to fulfill their regulatory and oversight obligations under the Act. For example, the DE Holdings Operating Agreement provides that, for so long as DE Holdings directly or indirectly controls the Exchange, the Managers, officers, employees, and agents of DE Holdings shall give due regard to the preservation of the independence of the self-regulatory function of the Exchange and shall not take any actions that would interfere with the effectuation of any decisions by the Exchange Board relating to the Exchange's regulatory functions (including disciplinary matters) or which would interfere with the ability of the Exchange to carry out its responsibilities under the Act.[24]

The Commission notes that the Exchange is not proposing to amend the DE Holdings Operating Agreement.[25] Accordingly, the DE Holdings Operating Agreement that the Commission reviewed in connection with the Exchange's application for registration as a national securities exchange, including the provisions in the DE Holdings Operating Agreement relating to the self-regulatory function of the Exchange, will remain in place following the Corporate Reorganization.

C. Ownership and Control of the Exchange, DEI, and DE Holdings

Following the Corporate Reorganization, DEI will be the sole stockholder of the Exchange. The Exchange Bylaws identify this ownership structure.[26] Any changes to the Exchange Bylaws, including any change in the provision that identifies DEI as the sole stockholder of the Exchange, must be filed with and approved by the Commission pursuant to Section 19 of the Act.[27] Similarly, the DEI Certificate identifies DE Holdings as the sole stockholder of DEI.[28] For as long as DEI directly or indirectly controls the Exchange, any amendment to the DEI Certificate, including an amendment to the provision that identifies DE Holdings as the sole stockholder of DEI, must be submitted to the Exchange Board and, if the Exchange Board determines that the amendment must be filed with, or filed with and approved by the Commission, before the amendment may be effective under Section 19 of the Act, then the proposed amendment will not be effective until it is filed with, or filed with and approved by, the Commission.[29]

In addition, as discussed in greater detail in the Order,[30] the DE Holdings Operating Agreement includes restrictions on the ability to own and vote the capital stock of DE Holdings.[31] These limitations apply for so long as DE Holdings directly or indirectly controls the Exchange.[32] The limitations, which are designed to prevent any Member of DE Holdings from exercising undue control over the operation of the Exchange and to assure that the Exchange and the Commission are able to effectively carry out their regulatory and oversight obligations under the Act, generally prohibit any person, other than International Securities Exchange Holdings, Inc., from owning interests representing more than

[20] *See* DEI Certificate, Article SIXTH(1).

[21] *See* DEI Certificate, Article SIXTH(2).

[22] *See* DEI Certificate, Article EIGHTH(3).

[23] *See* Order, *supra* note 4.

[24] *See* DE Holdings Operating Agreement Article XIV, Section 14.1. In addition, the DE Holdings Operating Agreement further specifies, among other things, that: (1) DE Holdings and its officers, Managers, employees, and agents submit to the Commission's and the Exchange's jurisdiction with respect to activities relating to the Exchange; (2) DE Holdings agrees to retain in confidence information in the books and records of the Exchange reflecting confidential information pertaining to the self-regulatory function of the Exchange (including disciplinary matters, trading data, trading practices, and audit information) that comes into DE Holdings' possession; (3) the books, records, premises, officers, Managers, agents, and employees of DE Holdings are deemed to be the books, records, premises, officers, Managers, agents, and employees of the Exchange for purposes of, and subject to oversight pursuant to, the Act, to the extent that they are related to the operation or administration of the Exchange; and (4) DE Holdings agrees to provide the Commission and the Exchange with access to DE Holdings' books and records that are related to the operation or administration of the Exchange for so long as DE Holdings directly or indirectly controls the Exchange. *See* DE Holdings Operating Agreement, Article XI, Section 14.3; and Article XI, Section 11.2. For a more complete discussion of the DE Holdings Operating Agreement, *see* Order, *supra* note 4, at notes 40—47 and accompanying text.

[25] For as long as DE Holdings directly or indirectly controls the Exchange, any changes to the DE Holdings Operating Agreement must be submitted to the Exchange Board and, if the Exchange Board determines that such amendment is required to be filed with the Commission pursuant to Section 19(b) of the Act, such change will not be effective until filed with, or filed with and approved by, the Commission. *See* DE Holdings Operating Agreement, Article XV, Section 15.2(b). *See also* Order, *supra* note 4, at note 47 and accompanying text.

[26] *See* Exchange Bylaws, Article I(kk).

[27] *See* 15 U.S.C. 78s.

[28] *See* DEI Certificate, Article EIGHTH(4).

[29] *See* DEI Certificate, Article EIGHTH(3).

[30] *See* Order, *supra* note 4, at notes 65–88 and accompanying text.

[31] *See* DE Holdings Operating Agreement, Article XII.

[32] *See* DE Holdings Operating Agreement, Article XII, Section 12.1(a).

40% of DE Holdings or from voting interests representing more than 20% of DE Holdings. In addition, the limitations prohibit any member of the Exchange from owning interests representing more than 20% of DE Holdings.

The Commission believes that these provisions in the governing documents of the Exchange, DEI, and DE Holdings should minimize the potential that a person could improperly interfere with or restrict the ability of the Commission or the Exchange to effectively carry out their regulatory and oversight responsibilities under the Act.

D. Electing Directors and Certain Committee Members of the Exchange

Currently, the DE Holdings Operating Agreement requires DE Holdings, in its capacity as the sole stockholder of the Exchange, to vote all of the outstanding equity of the Exchange owned by DE Holdings and entitled to vote in an election to be voted in favor of the election of (1) those directors nominated by the Nominating Committee of the Exchange ("Exchange Nominating Committee"); and (2) those nominees for the Exchange Nominating Committee and the Exchange Member Nominating Committee nominated in accordance with the governance documents of the Exchange.[33] Because DE Holdings will no longer be a stockholder of the Exchange following the Corporate Reorganization, the Exchange notes that these requirements will no longer apply to DE Holdings.

However, the DEI Bylaws require DEI, in its capacity as the sole stockholder of the Exchange, to cause all outstanding equity of the Exchange owned by DEI and entitled to vote in an election to be voted in favor of the election of (1) those directors nominated by the Exchange Nominating Committee; and (2) those nominees for the Exchange Nominating Committee and the Exchange Member Nominating Committee nominated in accordance with the governance documents of the Exchange.[34] Through these requirements in the DEI Bylaws, the Commission believes that the same procedures governing the election of Exchange directors and Exchange member directors that the Commission approved in the Order will continue to apply following the Corporate Reorganization.[35] Accordingly, the Commission finds that the proposal is consistent with the requirement in Section 6(b)(3) of the Act that the rules of the Exchange provide for the fair representation of its members in the selection of directors and the administration of the Exchange.

IV. Conclusion

It is therefore ordered, pursuant to Section 19(b)(2) of the Act,[36] that the proposed rule change (File No. SR–EDGX–2010–02) is approved.

For the Commission, by the Division of Trading and Markets, pursuant to delegated authority.[37]

Florence E. Harmon,

Deputy Secretary.

[FR Doc. 2010–18158 Filed 7–23–10; 8:45 am]

BILLING CODE 8010–01–P

[33] *See* DE Holdings Operating Agreement, Article VII, Section 7.3(b).

[34] *See* DEI Bylaws, Article II, Section 2.15(b).

[35] *See* Order, *supra* note 4, at notes 94–120 and accompanying text, for a discussion of the Exchange's procedures for nominating directors and Exchange member directors.

[36] 15 U.S.C. 78s(b)(2).

[37] 17 CFR 200.30–3(a)(12).

SECURITIES AND EXCHANGE COMMISSION

[Release No. 34–62526; File No. SR–NYSEAmex–2010–68]

Self-Regulatory Organizations; NYSE Amex LLC; Notice of Filing and Immediate Effectiveness of Proposed Rule Change Amending Its Fee Schedule

July 19, 2010.

Pursuant to Section 19(b)(1) of the Securities Exchange Act of 1934 (the "Act"),[1] and Rule 19b–4 thereunder,[2] notice is hereby given that on July 7, 2010, NYSE Amex LLC (the "Exchange" or the "NYSE Amex") filed with the Securities and Exchange Commission ("Commission") the proposed rule change as described in Items I, II, and III below, which items have been prepared by the self-regulatory organization. The Commission is publishing this notice to solicit comments on the proposed rule change from interested persons.

I. Self-Regulatory Organization's Statement of the Terms of Substance of the Proposed Rule Change

The Exchange proposes to temporarily suspend the collection of marketing charges on Customer orders that trade within the Complex Matching Engine contra to a Market Maker. Concurrent with this change we are also proposing to reduce some of the transaction fees associated with executions in the Complex Matching Engine.

A copy of this filing is available on the Exchange's Web site at *http://www.nyse.com*, on the Commission's Internet Web site at *http://www.sec.gov*, at the Exchange's principal office, and at the Commission's Public Reference Room.

II. Self-Regulatory Organization's Statement of the Purpose of, and Statutory Basis for, the Proposed Rule Change

In its filing with the Commission, the self-regulatory organization included statements concerning the purpose of, and basis for, the proposed rule change and discussed any comments it received on the proposed rule change. The text of these statements may be examined at the places specified in Item IV below. The self-regulatory organization has prepared summaries, set forth in sections A, B, and C below, of the most significant aspects of such statements.

A. Self-Regulatory Organization's Statement of the Purpose of, and Statutory Basis for, the Proposed Rule Change

1. Purpose

The Exchange is proposing to temporarily suspend the collection of marketing charges on Customer orders that trade within the Complex Matching Engine contra to a Market Maker. At present, our marketing charges program is designed to allow for the collection of marketing charges from Market Makers who trade contra to electronic Customer orders. The marketing charges accrue to either the Directed Order Market Maker or in the case of a non-directed order, the Specialist or e-Specialist that is in control of the pool of marketing charge monies that accrue from non-directed order flow.

Within our Complex Matching Engine we presently do not have functionality that would permit Market Makers to receive Directed Orders and therefore control the marketing charges associated with those directed Customer orders. Given this limitation, the Exchange feels it is appropriate to suspend the collection of marketing charges for electronic Customer orders executed in the Complex Matching Engine until such a time that we can offer Directed Order functionality within the Complex Matching Engine. Once we create functionality that will allow Directed Order Market Makers can [sic] receive Complex Directed Orders that execute within the Complex Matching Engine, the Exchange will file at that time to reinstate the collection of marketing charges.

Concurrent with this change in marketing charges, the Exchange is also proposing to reduce the transaction charges associated with receiving an

[1] 15 U.S.C. 78s(b)(1).

[2] 17 CFR 240.19b–4.

execution in the Complex Matching Engine. Presently, the Exchange charges all participants $.10 per contract except for when orders that originate from the same firm interact with each other in which case the charge is $.05 per contract. The Exchange intends to reduce the charge for all participants to $.05 per contract for executions received in the Complex Matching Engine regardless of whether the orders originate from the same firm or not.

These changes are intended to be effective immediately for all transactions beginning July 7, 2010.

2. Statutory Basis

The Exchange believes that the proposed rule change is consistent with the provisions of Section 6 of the Act,[3] in general, and Section 6(b)(4) of the Act,[4] in particular, in that it is designed to provide for the equitable allocation of reasonable dues, fees and other charges among its members and other persons using its facilities.

B. Self-Regulatory Organization's Statement on Burden on Competition

The Exchange does not believe that the proposed rule change will impose any burden on competition that is not necessary or appropriate in furtherance of the purposes of the Act.

C. Self-Regulatory Organization's Statement on Comments on the Proposed Rule Change Received From Members, Participants or Others

No written comments were solicited or received with respect to the proposed rule change.

III. Date of Effectiveness of the Proposed Rule Change and Timing for Commission Action

The foregoing rule change has become effective upon filing pursuant to Section 19(b)(3)(A) of the Act [5] and subparagraph (f)(2) of Rule 19b–4 [6] thereunder, because it establishes a due, fee, or other charge imposed by the NYSE Amex.

At any time within 60 days of the filing of such proposed rule change, the Commission may summarily abrogate such rule change if it appears to the Commission that such action is necessary or appropriate in the public interest, for the protection of investors, or otherwise in furtherance of the purposes of the Act.

[3] 15 U.S.C. 78f.

[4] 15 U.S.C. 78f(b)(4).

[5] 15 U.S.C. 78s(b)(3)(A).

[6] 17 CFR 19b–4(f)(2).

IV. Solicitation of Comments

Interested persons are invited to submit written data, views, and arguments concerning the foregoing, including whether the proposed rule change is consistent with the Act. Comments may be submitted by any of the following methods:

Electronic Comments

- Use the Commission's Internet comment form (*http://www.sec.gov/rules/sro.shtml*); or
- Send an e-mail to *rule-comments@sec.gov.* Please include File Number SR–NYSEAmex–2010–68 on the subject line.

Paper Comments

- Send paper comments in triplicate to Elizabeth M. Murphy, Secretary, Securities and Exchange Commission, 100 F Street, NE., Washington, DC 20549–1090.

All submissions should refer to File Number SR–NYSEAmex–2010–68. This file number should be included on the subject line if e-mail is used. To help the Commission process and review your comments more efficiently, please use only one method. The Commission will post all comments on the Commission's Internet Web site (*http://www.sec.gov/rules/sro.shtml*). Copies of the submission, all subsequent amendments, all written statements with respect to the proposed rule change that are filed with the Commission, and all written communications relating to the proposed rule change between the Commission and any person, other than those that may be withheld from the public in accordance with the provisions of 5 U.S.C. 552, will be available for Web site viewing and printing in the Commission's Public Reference Room, 100 F Street, NE., Washington, DC 20549, on official business days between the hours of 10 a.m. and 3 p.m. Copies of the filing also will be available for inspection and copying at NYSE's principal office and on its Internet Web site at *http://www.nyse.com.* All comments received will be posted without change; the Commission does not edit personal identifying information from submissions. You should submit only information that you wish to make available publicly. All submissions should refer to File Number SR–NYSEAmex–2010–68 and should be submitted on or before August 16, 2010.

For the Commission, by the Division of Trading and Markets, pursuant to delegated authority.[7]

Florence E. Harmon,

Deputy Secretary.

[FR Doc. 2010–18165 Filed 7–23–10; 8:45 am]

BILLING CODE 8010–01–P

SECURITIES AND EXCHANGE COMMISSION

[Release No. 34–62533; File No. SR–FINRA–2010–028]

Self-Regulatory Organizations; Financial Industry Regulatory Authority, Inc.; Order Approving a Proposed Rule Change, as Modified by Amendment No. 1, To Adopt NASD Rule 3210 (Short Sale Delivery Requirements) as FINRA Rule 4320 in the Consolidated FINRA Rulebook

July 20, 2010.

On May 21, 2010, the Financial Industry Regulatory Authority, Inc. ("FINRA") filed with the Securities and Exchange Commission ("SEC" or "Commission"), pursuant to Section 19(b)(1) of the Securities Exchange Act of 1934 ("Act") [1] and Rule 19b–4 thereunder,[2] a proposed rule change to adopt NASD Rule 3210 as FINRA Rule 4320 in the consolidated FINRA rulebook. On June 11, 2010, FINRA filed Amendment No. 1 to the proposed rule change.[3] The proposed rule change, as modified by Amendment No. 1, was published for comment in the **Federal Register** on June 17, 2010.[4] The Commission received no comments on the proposal. This order approves the proposed rule change, as modified by Amendment No. 1.

I. Description of the Proposed Rule Change

As part of the process of developing a new consolidated rulebook ("Consolidated FINRA Rulebook"),[5]

[7] 15 CFR 200.30–3(a)(12).

[1] 15 U.S.C. 78s(b)(1).

[2] 17 CFR 240.19b–4.

[3] Amendment No. 1 was a partial amendment that made minor clarifications, provided additional detail and made technical edits to the purpose section of the proposed rule change.

[4] *See* Securities Exchange Act Release No. 62288 (Jun. 11, 2010), 75 FR 34496 (Jun. 17, 2010).

[5] FINRA stated that the current FINRA rulebook consists of (1) FINRA Rules; (2) NASD Rules; and (3) rules incorporated from NYSE ("Incorporated NYSE Rules") (together, the NASD Rules and Incorporated NYSE Rules are referred to as the "Transitional Rulebook"). While the NASD Rules generally apply to all FINRA members, the Incorporated NYSE Rules apply only to those members of FINRA that are also members of the NYSE ("Dual Members"). FINRA also stated that FINRA Rules apply to all FINRA members, unless such rules have a more limited application by their

FINRA has proposed to adopt NASD Rule 3210 (Short Sale Delivery Requirements), with minor changes, as FINRA Rule 4320 in the Consolidated FINRA Rulebook.

On April 4, 2006, the SEC approved NASD Rule 3210, which applies short sale delivery requirements to those equity securities not otherwise covered by the close-out requirements of Regulation SHO. The Regulation SHO close-out requirements apply only to the equity securities of "reporting" issuers (*i.e.,* issuers that are registered pursuant to Section 12 of the Act[6] or that are required to file reports pursuant to Section 15(d) of the Act[7]).

NASD Rule 3210, among other things, requires participants of registered clearing agencies to take action on failures to deliver that exist for 13 consecutive settlement days in certain non-reporting securities. In addition, if the fail to deliver position is not closed out in the requisite time period, a participant of a registered clearing agency or any broker-dealer for which it clears transactions is prohibited from effecting further short sales in the particular specified security without borrowing, or entering into a bona fide arrangement to borrow, the security until the fail to deliver position is closed out. Pursuant to NASD Rule 3210, FINRA publishes a daily "Threshold Security List."[8] The rule became effective on July 3, 2006. In adopting NASD Rule 3210, FINRA believed that the rule represented an important step in reducing long-term fails to deliver in this sector of the marketplace.

In July 2009, the SEC adopted the substance of temporary Rule 204T[9] under Regulation SHO as a permanent rule, Rule 204 of Regulation SHO.[10] This rule is intended to further the goal of reducing fails to deliver and addressing potentially abusive "naked" short selling in all equity securities by requiring that, subject to certain limited exceptions, if a registered clearing agency participant has a fail to deliver position resulting from a short sale at a registered clearing agency it must immediately purchase or borrow securities to close out a fail to deliver position by no later than the beginning of regular trading hours on the settlement day following settlement date.[11]

Notwithstanding the SEC's adoption of this new rule, FINRA believes proposed FINRA Rule 4320 continues to be necessary to provide regulatory coverage for fails to deliver in non-reporting over-the-counter equity securities that pre-exist the SEC's implementation of temporary Rule 204T in September 2008.[12]

Therefore, FINRA has proposed to adopt NASD Rule 3210 as FINRA Rule 4320 with minor changes to delete language that provided allowances for "grandfathered" securities during the initial implementation period of NASD Rule 3210 and that, therefore, is no longer relevant. The proposed rule change also clarifies, consistent with Regulation SHO, the borrowing requirements for clearing agency participants, including broker-dealers for which they clear transactions, that sell short non-reporting threshold securities for which a fail to deliver position has not been closed out in the requisite time. Specifically, if a fail to deliver position is not closed out in accordance with Rule 4320(a), the clearing agency participant and any broker-dealer for which it clears, including market makers otherwise entitled to rely on the Rule 203(b)(2)(iii) exception of Regulation SHO, would not be able to short sell the non-reporting threshold security either for itself or for the account of another, unless it has previously arranged to borrow or borrowed the security, until the participant closes out the fail to deliver position by purchasing securities of like kind and quantity and that purchase has cleared and settled at a registered clearing agency. In addition, the proposed rule change makes certain technical amendments to the rule, including changing references to "NASD" to "FINRA."

FINRA has represented that it will announce the implementation date of the proposed rule change in a *Regulatory Notice* to be published no later than 90 days following Commission approval. The implementation date will be no more than 180 days following Commission approval.

III. Discussion and Commission's Findings

After careful review, the Commission finds that the proposed rule change, as modified by Amendment No. 1, is consistent with the requirements of the Act, and the rules and regulations thereunder that are applicable to a national securities association.[13] In particular, the Commission believes that the proposed rule change is consistent with the provisions of Section 15A(b)(6) of the Act, in that it is designed to prevent fraudulent and manipulative acts and practices, to promote just and equitable principles of trade, to remove impediments to and perfect the mechanism of a free and open market and a national market system, and, in general, to protect investors and the public interest. The Commission believes that the proposed rule change to adopt NASD Rule 3210 as FINRA Rule 4320 in the Consolidated FINRA Rulebook continues to be necessary to provide regulatory coverage for fails to deliver in non-reporting over-the-counter equity securities and will continue to help reduce long-term fails to deliver in this sector of the marketplace.

IV. Conclusion

It is therefore ordered, pursuant to Section 19(b)(2) of the Act,[14] that the proposed rule change (File No. SR–FINRA–2010–028), as modified by Amendment No. 1, be and hereby is approved.

For the Commission, by the Division of Trading and Markets, pursuant to delegated authority.[15]

Florence E. Harmon,

Deputy Secretary.

[FR Doc. 2010–18168 Filed 7–23–10; 8:45 am]

BILLING CODE 8010–01–P

terms. For more information about the rulebook consolidation process, *see Information Notice,* March 12, 2008 (Rulebook Consolidation Process).

[6] 15 U.S.C. 78*l.*

[7] 15 U.S.C. 78*o*(d).

[8] FINRA stated that, for purposes of Rule 3210, a non-reporting threshold security is any equity security that is not a reporting security and, for five consecutive settlement days, has: (1) Aggregate fails to deliver at a registered clearing agency of 10,000 shares or more; and (2) a reported last sale during normal market hours (9:30 a.m. to 4 p.m., Eastern Time (ET)) for the security on that settlement day that would value the aggregate fail to deliver position at $50,000 or more.

[9] *See* Securities Exchange Act Release No. 58785 (Oct. 14, 2008), 73 FR 61678 (Oct. 17, 2008).

[10] *See* Securities Exchange Act Release No. 60388 (July 27, 2009), 74 FR 38266 (July 31, 2009).

[11] Rule 204 of Regulation SHO further provides that fails to deliver resulting from long sales or certain bona fide market making activity must be closed out by no later than the beginning of regular trading hours on the third settlement day after settlement date (*i.e.,* T+6).

[12] Likewise, the SEC is retaining Rule 203(b)(3) of Regulation SHO in order to cover pre-existing temporary Rule 204T fails in threshold securities as defined in Rule 203(c)(6) of Regulation SHO.

[13] In approving the proposed rule change, the Commission has considered the proposed rule's impact on efficiency, competition, and capital formation. *See* 15 U.S.C. 78c(f).

[14] 15 U.S.C. 78s(b)(2).

[15] 17 CFR 200.30–3(a)(12).

SECURITIES AND EXCHANGE COMMISSION

[Release No. 34–62534; File No. SR–Phlx–2010–95]

Self-Regulatory Organizations; Notice of Filing and Immediate Effectiveness of Proposed Rule Change by NASDAQ OMX PHLX, Inc. Relating to Order Re-Entry

July 20, 2010.

Pursuant to section 19(b)(1) of the Securities Exchange Act of 1934 ("Act")[1] and Rule 19b–4 thereunder,[2] notice is hereby given that on July 12, 2010, NASDAQ OMX PHLX, Inc. ("Phlx" or the "Exchange") filed with the Securities and Exchange Commission ("Commission") the proposed rule change as described in Items I, II, and III below, which Items have been prepared by the Exchange. Phlx has designated the proposed rule change as constituting a rule change under Rule 19b–4(f)(5) under the Act,[3] which renders the proposal effective upon filing with the Commission. The Commission is publishing this notice to solicit comments on the proposed rule change from interested persons.

I. Self-Regulatory Organization's Statement of the Terms of Substance of the Proposed Rule Change

The Exchange proposes to amend Rules 1017, Openings in Options, and 1082, Firm Quotations, to reflect a system enhancement that automatically re-enters unexecuted contracts when, after trading at the Exchange and/or routing, there are contracts remaining from the initiating order.

The text of the proposed rule change is available on the Exchange's Web site at *http://www.nasdaqtrader.com/micro.aspx?id=PHLXRulefilings,* at the principal office of the Exchange, and at the Commission's Public Reference Room.

II. Self-Regulatory Organization's Statement of the Purpose of, and Statutory Basis for, the Proposed Rule Change

In its filing with the Commission, the Exchange included statements concerning the purpose of and basis for the proposed rule change and discussed any comments it received on the proposed rule change. The text of these statements may be examined at the places specified in Item IV below. The Exchange has prepared summaries, set forth in sections A, B, and C below, of the most significant aspects of such statements.

A. Self-Regulatory Organization's Statement of the Purpose of, and Statutory Basis for, the Proposed Rule Change

1. Purpose

The purpose of the proposed rule change is to change the manner in which the PHLX XL® automated options trading system[4] handles unexecuted contracts following: (1) The end of the opening process; and (2) the end of the "quote exhaust" and "market exhaust" auctions. This new feature further automates the order handling process, particularly at the opening of trading, for certain member organizations routing order flow to the Exchange. The new feature is optional and is available to any Exchange member upon request.

Currently, at the end of the opening process, the PHLX XL system cancels all unexecuted order interest priced through the opening price level, and sends a cancellation notice to the member that originally submitted the order. Similarly, at the end of the quote exhaust and market exhaust auctions, the PHLX XL system cancels unexecuted order volume that initiated such auction(s), and sends a cancellation notice to the member that originally submitted the order.

The instant proposal would modify the PHLX XL system and corresponding Exchange rules such that the PHLX XL system will, upon the written instruction of the member that initially submitted the order, re-submit unexecuted contracts following the opening process and following the quote exhaust and market exhaust auctions.[5] A re-submitted order will be treated strictly as a new order, thus forgoing any time/price priority it may have had when initially entered by the member that originally submitted the order. Therefore, the time of receipt of the new order will be recorded as of the time it is re-submitted. Cancellation notices under the proposal will be stopped by the system and will not reach the member that originally submitted the order.

2. Statutory Basis

The Exchange believes that its proposal is consistent with section 6(b) of the Act[6] in general, and furthers the objectives of section 6 (b)(5) of the Act[7] in particular, in that it is designed to promote just and equitable principles of trade, to remove impediments to and perfect the mechanism of a free and open market and a national market system, and, in general to protect investors and the public interest. Specifically, the Exchange believes that the proposal benefits customers by improving market efficiency through the enhanced automation of the order entry process when a member has instructed the Exchange to automatically re-submit unexecuted contracts following routing to away markets.

B. Self-Regulatory Organization's Statement on Burden on Competition

The Exchange does not believe that the proposed rule change will impose any burden on competition not necessary or appropriate in furtherance of the purposes of the Act.

C. Self-Regulatory Organization's Statement on Comments on the Proposed Rule Change Received From Members, Participants or Others

No written comments were either solicited or received.

III. Date of Effectiveness of the Proposed Rule Change and Timing for Commission Action

The proposed rule change effects a change in an existing order-entry or trading system of a self-regulatory organization that: (i) Does not significantly affect the protection of investors or the public interest; (ii) does not impose any significant burden on competition; and (iii) does not have the effect of limiting the access to or availability of the system. Therefore, the proposal is effective upon filing pursuant to section 19(b)(3)(A)[8] of the Act and subparagraph (f)(5) of Rule 19b–4 thereunder.[9]

At any time within 60 days of the filing of the proposed rule change, the Commission may summarily abrogate such rule change if it appears to the Commission that such action is

[1] 15 U.S.C. 78s(b)(1).

[2] 17 CFR 240.19b–4.

[3] 17 CFR 240.19b–4(f)(5).

[4] This proposal refers to "PHLX XL" as the Exchange's automated options trading system. In May 2009 the Exchange enhanced the system and adopted corresponding rules referring to the system as "Phlx XL II." *See* Securities Exchange Act Release No. 59995 (May 28, 2009), 74 FR 26750 (June 3, 2009) (SR–Phlx–2009–32). The Exchange intends to submit a separate technical proposed rule change that would change all references to the system from "Phlx XL II" to "PHLX XL" for branding purposes.

[5] The Exchange anticipates that a member's single written instruction to re-submit unexecuted contracts would apply to all orders in specified options following the receipt of the written instruction by the Exchange. For purposes of this proposal, an e-mail message is sufficient to satisfy the written instruction requirement. The Exchange will publish an Options Trader Alert ("OTA") on its Web site describing where and to whom such written instruction should be made.

[6] 15 U.S.C. 78f(b).

[7] 15 U.S.C. 78f(b)(5).

[8] 15 U.S.C. 78s(b)(3)(A).

[9] 17 CFR 240.19b–4(f)(5).

necessary or appropriate in the public interest, for the protection of investors, or otherwise in furtherance of the purposes of the Act.

IV. Solicitation of Comments

Interested persons are invited to submit written data, views, and arguments concerning the foregoing, including whether the proposed rule change is consistent with the Act. Comments may be submitted by any of the following methods:

Electronic Comments

- Use the Commission's Internet comment form (*http://www.sec.gov/rules/sro.shtml*); or
- Send an e-mail to *rule-comments@sec.gov.* Please include File Number SR–Phlx-2010–95 on the subject line.

Paper Comments

- Send paper comments in triplicate to Elizabeth M. Murphy, Secretary, Securities and Exchange Commission, 100 F Street, NE., Washington, DC 20549–1090.

All submissions should refer to File Number SR–Phlx-2010–95. This file number should be included on the subject line if e-mail is used. To help the Commission process and review your comments more efficiently, please use only one method. The Commission will post all comments on the Commission's Internet Web site (*http://www.sec.gov/rules/sro.shtml*). Copies of the submission, all subsequent amendments, all written statements with respect to the proposed rule change that are filed with the Commission, and all written communications relating to the proposed rule change between the Commission and any person, other than those that may be withheld from the public in accordance with the provisions of 5 U.S.C. 552, will be available for Web site viewing and printing in the Commission's Public Reference Room, on official business days between the hours of 10 a.m. and 3 p.m. Copies of the filing also will be available for inspection and copying at the principal office of the Exchange. All comments received will be posted without change; the Commission does not edit personal identifying information from submissions. You should submit only information that you wish to make available publicly. All submissions should refer to File Number SR–Phlx–2010–95 and should be submitted on or before August 16, 2010.

For the Commission, by the Division of Trading and Markets, pursuant to delegated authority.[10]

Florence E. Harmon,

Deputy Secretary.

[FR Doc. 2010–18211 Filed 7–23–10; 8:45 am]

BILLING CODE 8010–01–P

SECURITIES AND EXCHANGE COMMISSION

[Release No. 34–62496; File No. SR–NASDAQ–2010–080]

Self-Regulatory Organizations; The NASDAQ Stock Market LLC; Notice of Filing and Immediate Effectiveness of Proposed Rule Change Regarding a Clerical Change to Nasdaq Rules

July 14, 2010.

Pursuant to Section 19(b)(1) of the Securities Exchange Act of 1934 ("Act")[1] and Rule 19b–4 thereunder,[2] notice is hereby given that on June 30, 2010, The NASDAQ Stock Market LLC ("Nasdaq" or the "Exchange") filed with the Securities and Exchange Commission ("SEC" or "Commission") the proposed rule change as described in Items I, II, and III below, which Items have been prepared by the Exchange. Nasdaq proposes to make a clerical correction to the Nasdaq rulebook under Rule 19b–4(f)(3) under the Act,[3] which renders the proposal effective upon filing with the Commission. The Commission is publishing this notice to solicit comments on the proposed rule change from interested persons.

I. Self-Regulatory Organization's Statement of the Terms of the Substance of the Proposed Rule Change

Nasdaq proposes to make clerical corrections to the Nasdaq rulebook. Nasdaq proposes to implement the proposed rule change immediately.

The text of the proposed rule change is available on Nasdaq's Web site *http://nasdaq.cchwallstreet.com,* at Nasdaq's principal office, and at the Commission's Public Reference Room.

Proposed new language is underlined; proposed deletions are in brackets.[4]

* * * * *

7052. [7051.] Nasdaq Daily Short Volume and Monthly Short Sale Transaction Files

No Change.

* * * * *

II. Self-Regulatory Organization's Statement of the Purpose of, and Statutory Basis for, the Proposed Rule Change

In its filing with the Commission, Nasdaq included statements concerning the purpose of and basis for the proposed rule change and discussed any comments it received on the proposed rule change. The text of these statements may be examined at the places specified in Item IV below. Nasdaq has prepared summaries, set forth in Sections A, B, and C below, of the most significant aspects of such statements.

A. Self-Regulatory Organization's Statement of the Purpose of, and Statutory Basis for, the Proposed Rule Change

1. Purpose

Nasdaq proposes to make a clerical correction to the Nasdaq rulebook. Specifically, Nasdaq proposes to renumber Nasdaq Rule 7051 to Nasdaq Rule 7052. Nasdaq is renumbering this rule because Nasdaq has filed another proposed rule change that necessitates a renumbering of the existing Rule 7051. Nasdaq is making no changes to Rule 7051, other than to change the rule number to 7052.

2. Statutory Basis

Nasdaq believes that the proposed rule change is consistent with the provisions of Section 6 of the Act,[5] in general, and with Section 6(b)(5) of the Act,[6] in particular, in that the proposal is designed to prevent fraudulent and manipulative acts and practices, to promote just and equitable principles of trade, to foster cooperation and coordination with persons engaged in regulating, clearing, settling, processing information with respect to, and facilitating transactions in securities, to remove impediments to and perfect the mechanism of a free and open market and a national market system, and, in general, to protect investors and the public interest. The proposed rule change makes a minor clerical change to renumber an existing Nasdaq rule.

B. Self-Regulatory Organization's Statement on Burden on Competition

Nasdaq does not believe that the proposed rule change will result in any burden on competition that is not necessary or appropriate in furtherance of the purposes of the Act, as amended.

[10] 17 CFR 200.30–3(a)(12).

[1] 15 U.S.C. 78s(b)(1).

[2] 17 CFR 240.19b–4.

[3] 17 CFR 240.19b–4(f)(3).

[4] Changes are marked to the rule text that appears in the electronic manual of Nasdaq found at *http://nasdaq.cchwallstreet.com/.*

[5] 15 U.S.C. 78f.

[6] 15 U.S.C. 78f(b)(5).

C. Self-Regulatory Organization's Statement on Comments on the Proposed Rule Change Received From Members, Participants, or Others

Written comments were neither solicited nor received.

III. Date of Effectiveness of the Proposed Rule Change and Timing for Commission Action

Pursuant to Section 19(b)(3)(A) of the Act[7] and Rule 19b–4(f)(3) thereunder,[8] Nasdaq has designated this proposal as one that is concerned solely with the administration of the self-regulatory organization. Accordingly, Nasdaq believes that its proposal should become immediately effective.

IV. Solicitation of Comments

Interested persons are invited to submit written data, views, and arguments concerning the foregoing, including whether the proposed rule change is consistent with the Act. Comments may be submitted by any of the following methods:

Electronic Comments

- Use the Commission's Internet comment form (*http://www.sec.gov/rules/sro.shtml*); or
- Send an e-mail to *rule-comments@sec.gov.* Please include File Number SR–NASDAQ–2010–080 on the subject line.

Paper Comments

- Send paper comments in triplicate to Elizabeth M. Murphy, Secretary, Securities and Exchange Commission, 100 F Street, NE., Washington, DC 20549–1090.

All submissions should refer to File Number SR–NASDAQ–2010–080. This file number should be included on the subject line if e-mail is used. To help the Commission process and review your comments more efficiently, please use only one method. The Commission will post all comments on the Commission's Internet Web site (*http://www.sec.gov/rules/sro.shtml*). Copies of the submission, all subsequent amendments, all written statements with respect to the proposed rule change that are filed with the Commission, and all written communications relating to the proposed rule change between the Commission and any person, other than those that may be withheld from the public in accordance with the provisions of 5 U.S.C. 552, will be available for Web site viewing and printing in the Commission's Public Reference Room, 100 F Street, NE., Washington, DC 20549, on official business days between the hours of 10 a.m. and 3 p.m. Copies of the filing also will be available for inspection and copying at the principal office of the Exchange. All comments received will be posted without change; the Commission does not edit personal identifying information from submissions. You should submit only information that you wish to make available publicly. All submissions should refer to File Number SR–NASDAQ–2010–080 and should be submitted on or before August 16, 2010.

For the Commission, by the Division of Trading and Markets, pursuant to delegated authority.[9]

Elizabeth M. Murphy,

Secretary.

[FR Doc. 2010–18172 Filed 7–23–10; 8:45 am]

BILLING CODE 8010–01–P

[7] 15 U.S.C. 78s(b)(3)(A).

[8] 17 CFR 240.19b–4(f)(3).

[9] 17 CFR 200.30–3(a)(12).

SECURITIES AND EXCHANGE COMMISSION

[Release No.34–62531; File No. SR–NASDAQ–2010–087]

Self-Regulatory Organizations; Notice of Filing and Immediate Effectiveness of a Proposed Rule Change by The NASDAQ Stock Market LLC Relating to Trading Halts in Options During a Trading Pause in the Underlying Securities

July 19, 2010.

Pursuant to Section 19(b)(1) of the Securities Exchange Act of 1934 ("Act")[1], and Rule 19b–4[2] thereunder, notice is hereby given that on July 14, 2010, The NASDAQ Stock Market LLC ("NASDAQ") filed with the Securities and Exchange Commission ("SEC" or "Commission") the proposed rule change as described in Items I and II below, which Items have been prepared by NASDAQ. The Commission is publishing this notice to solicit comments on the proposed rule change from interested persons.

I. Self-Regulatory Organization's Statement of the Terms of Substance of the Proposed Rule Change

NASDAQ is filing with the Securities and Exchange Commission ("SEC" or "Commission") a proposal for the NASDAQ Options Market ("NOM" or "Exchange") to amend NOM Chapter V, Section 3 (Trading Halts) to enhance the recently-implemented options halt rule whenever trading in the underlying security has been paused by the primary listing market (the "options halt rule").[3]

The text of the proposed rule change is available from NASDAQ's Web site at *http://nasdaq.cchwallstreet.com/Filings/,* at NASDAQ's principal office, and at the Commission's Public Reference Room.

II. Self-Regulatory Organization's Statement of the Purpose of, and Statutory Basis for, the Proposed Rule Change

In its filing with the Commission, NASDAQ included statements concerning the purpose of and basis for the proposed rule change and discussed any comments it received on the proposed rule change. The text of these statements may be examined at the places specified in Item IV below. NASDAQ has prepared summaries, set forth in sections A, B, and C below, of the most significant aspects of such statements.

A. Self-Regulatory Organization's Statement of the Purpose of, and Statutory Basis for, the Proposed Rule Change

1. Purpose

The purpose of this proposal is to amend Chapter V, Section 3 to enhance the recently-implemented options halt rule to indicate that if trading has not been resumed on the primary listing market for the underlying security once ten minutes has passed after an underlying security was paused, the Exchange may resume options trading if trading has resumed on at least one national securities exchange; and that the Exchange will continue certain processes during the halt (maintain booked orders, accept orders, and process cancels).

On June 10, 2010, the Exchange filed an immediately effective proposal to establish the options halt rule in new subsection (a)(vi) to Chapter V, Section 3.[4] Subsection (a)(vi) states that trading on the Exchange in any option contract shall be halted whenever trading in the underlying security has been paused by

[1] 15 U.S.C. 78s(b)(1).

[2] 17 CFR 240.19b–4.

[3] The options halt rule is also known as the options pause rule.

[4] *See* Securities Exchange Act Release No. 62270 (June 10, 2010), 75 FR 34510, (June 17, 2010) (NASDAQ–2010–071) (notice of filing and immediate effectiveness regarding options halt rule). The Exchange proposed the options halt rule after consultation with Commission staff regarding uniform market-wide trading pause standards for certain individual stocks that experience rapid price movement and for individual equity options overlying those stocks. For a similar options halt rule proposed by another options exchange, *see* Securities Exchange Act Release No. 62269 (June 10, 2010), 75 FR 34491, (June 17, 2010) (Phlx–2010–82)(notice of filing and immediate effectiveness regarding options halt rule).

the primary listing market. The rule states further that trading in such halted options contracts may be resumed upon a determination by the Exchange that the conditions that led to the pause are no longer present and that the interests of a fair and orderly market are best served by a resumption of trading, which in no circumstances will be before the Exchange has received notification that the underlying security has resumed trading on at least one exchange.

On the same day as the Exchange's options halt rule filing, Chicago Board Options Exchange ("CBOE") filed an options halt that is similar to the Exchange's options halt rule but has some additional elements.[5] The Exchange's current filing is based on the CBOE filing.

The Exchange believes that it should continue certain processes and procedures independently of an options trading halt. Specifically, the Exchange proposes to state in subsection (a)(vi)(B) to Chapter V, Section 3 that during the options halt, the Exchange will maintain existing orders on the book, accept orders, and process cancels.

Moreover, the Exchange believes that it should have the ability to resume options trading within certain parameters after an underlying halt. Specifically, the Exchange proposes to state in subsection (a)(vi)(A) to Chapter V, Section 3 that if trading has not been resumed on the primary listing market for the underlying security after ten minutes have passed since the underlying security was paused by the primary listing market, the Exchange may resume trading in options contracts if the underlying security has resumed trading on at least one national securities exchange.[6]

The Exchange believes that the proposals, individually and together, enhance and strengthen the options halt rule and its application. The proposals will be immediately implemented upon effectiveness of the filing.

The Exchange believes that the options halt rule as amended ensures that the Exchange has the ability to maintain fair and orderly markets in options upon the imposition of a single stock trading pause by the listing market for the underlying security.

2. Statutory Basis

The Exchange believes that its proposal is consistent with Section 6(b) of the Act[7] in general, and furthers the objectives of Section 6(b)(5) of the Act[8] in particular, in that it is designed to prevent fraudulent and manipulative acts and practices, to promote just and equitable principles of trade, to foster cooperation and coordination with persons engaged in facilitating transactions in securities, and to remove impediments to and perfect the mechanisms of a free and open market and a national market system. Specifically, the Exchange believes that the proposal benefits customers by enhancing the current options halt rule to clarify the circumstances under which the Exchange may resume options trading, and that the Exchange will continue certain order processing and cancellation functions during a halt.

B. Self-Regulatory Organization's Statement on Burden on Competition

The Exchange does not believe that the proposed rule change will result in any burden on competition that is not necessary or appropriate in furtherance of the purposes of the Act.

C. Self-Regulatory Organization's Statement on Comments on the Proposed Rule Change Received From Members, Participants, or Others

Written comments were neither solicited nor received.

III. Date of Effectiveness of the Proposed Rule Change and Timing for Commission Action

The Exchange believes that the foregoing proposed rule change may take effect upon filing with the Commission pursuant to Section 19(b)(3)(A)[9] of the Act and Rule 19b–4(f)(6)(iii) thereunder[10] because the foregoing proposed rule change does not: (i) Significantly affect the protection of investors or the public interest; (ii) impose any significant burden on competition; and (iii) become operative for 30 days from the date on which it was filed, or such shorter time as the Commission may designate. The Exchange has asked the Commission to waive the 30-day operative delay so that the proposal may become operative upon filing. The Commission notes that the proposed rule change clarifies certain aspects of the Exchange's rule regarding how orders will be handled during options trading halts caused by a pause in the trading of the underlying security and also clarifies when the Exchange may resume trading when a trading pause in the underlying security is prolonged for unknown reasons. The proposed rule change does not raise any new substantive issues. For these reasons, the Commission believes that the waiver of the 30-day operative delay is consistent with the protection of investors and the public interest.[11]

At any time within 60 days of the filing of the proposed rule change, the Commission may summarily abrogate such rule change if it appears to the Commission that such action is necessary or appropriate in the public interest, for the protection of investors, or otherwise in furtherance of the purposes of the Act.

IV. Solicitation of Comments

Interested persons are invited to submit written data, views, and arguments concerning the foregoing, including whether the proposed rule change is consistent with the Act. Comments may be submitted by any of the following methods:

Electronic Comments

- Use the Commission's Internet comment form (*http://www.sec.gov/rules/sro.shtml);* or
- Send an e-mail to *rule-comments@sec.gov*. Please include File Number SR–NASDAQ–2010–087 on the subject line.

Paper Comments

- Send paper comments in triplicate to Elizabeth M. Murphy, Secretary, Securities and Exchange Commission, 100 F Street, NE., Washington, DC 20549–1090.

---

[5] The additional elements include the following: That if trading has not been resumed on the primary listing market for the underlying security once ten minutes passed after an underlying security was paused, the Exchange may resume options trading if at least one market has resumed trading in the underlying; and that the Exchange will continue certain processes during the halt (maintain booked orders, accept orders, and process cancels). *See* Securities Exchange Act Release No. 62272 (June 10, 2010), 75 FR 34509, (June 17, 2010) (CBOE 2010–055).

[6] No changes to the Exchange's trading processes are otherwise contemplated by this proposal. For example, transactions that occur between the time the pause is imposed on the listing market and the halt is processed on the Exchange may be nullified pursuant to Chapter V, Section 6. And orders in the affected option that are received during the halt on the Exchange will be treated as pre-opening orders and will be included in the re-opening process upon the resumption of trading on the listing market for the underlying security pursuant to Chapter VI, Section 8.

[7] 15 U.S.C. 78f(b).

[8] 15 U.S.C. 78f(b)(5).

[9] 15 U.S.C. 78s(b)(3)(A).

[10] 17 CFR 240.19b–4(f)(6)(iii). In addition, Rule 19b–4(f)(6) requires a self-regulatory organization to give the Commission written notice of its intent to file the proposed rule change at least five business days prior to the date of filing of the proposed rule change, or such shorter time as designated by the Commission. The Exchange has satisfied this requirement.

[11] For purposes only of waiving the 30-day operative delay of this proposal, the Commission has considered the proposed rule's impact on efficiency, competition and capital formation. 15 U.S.C. 78c(f).

All submissions should refer to File Number SR–NASDAQ–2010–087. This file number should be included on the subject line if e-mail is used. To help the Commission process and review your comments more efficiently, please use only one method. The Commission will post all comments on the Commission's Internet Web site (*http://www.sec.gov/rules/sro.shtml*).

Copies of the submission, all subsequent amendments, all written statements with respect to the proposed rule change that are filed with the Commission, and all written communications relating to the proposed rule change between the Commission and any person, other than those that may be withheld from the public in accordance with the provisions of 5 U.S.C. 552, will be available for Web site viewing and printing in the Commission's Public Reference Room. Copies of the filing also will be available for inspection and copying at the principal office of the Exchange. All comments received will be posted without change; the Commission does not edit personal identifying information from submissions. You should submit only information that you wish to make available publicly.

All submissions should refer to File Number SR–NASDAQ–2010–087 and should be submitted on or before August 16, 2010.

For the Commission, by the Division of Trading and Markets, pursuant to delegated authority.[12]

Florence E. Harmon,

Deputy Secretary.

[FR Doc. 2010–18167 Filed 7–23–10; 8:45 am]

BILLING CODE 8010–01–P

SECURITIES AND EXCHANGE COMMISSION

[Release No. 34–62530; File No. SR–Phlx–2010–96]

Self-Regulatory Organizations; Notice of Filing and Immediate Effectiveness of Proposed Rule Change by NASDAQ OMX PHLX, Inc. Relating to Trading Halts in Options During a Trading Pause in the Underlying Securities

July 19, 2010.

Pursuant to Section 19(b)(1) of the Securities Exchange Act of 1934 ("Act")[1], and Rule 19b–4[2] thereunder, notice is hereby given that on July 14, 2010, NASDAQ OMX PHLX, Inc. ("Phlx" or "Exchange") filed with the Securities and Exchange Commission ("SEC" or "Commission") the proposed rule change as described in Items I and II below, which Items have been prepared by the Exchange. The Commission is publishing this notice to solicit comments on the proposed rule change from interested persons.

I. Self-Regulatory Organization's Statement of the Terms of Substance of the Proposed Rule Change

The Exchange is filing with the Commission a proposal to amend Phlx Rule 1047 (Trading Rotations, Halts and Suspensions) to enhance the recently-implemented options halt rule whenever trading in the underlying security has been paused by the primary listing market (the "options halt rule").[3]

The text of the proposed rule change is available on the Exchange's Web site at *http://nasdaqomxphlx.cchwallstreet.com/NASDAQOMXPHLX/Filings/,* at the principal office of the Exchange, and at the Commission's Public Reference Room.

II. Self-Regulatory Organization's Statement of the Purpose of, and Statutory Basis for, the Proposed Rule Change

In its filing with the Commission, the Exchange included statements concerning the purpose of and basis for the proposed rule change and discussed any comments it received on the proposed rule change. The text of these statements may be examined at the places specified in Item IV below. The Exchange has prepared summaries, set forth in sections A, B, and C below, of the most significant aspects of such statements.

A. Self-Regulatory Organization's Statement of the Purpose of, and Statutory Basis for, the Proposed Rule Change

1. Purpose

The purpose of this proposal is to amend Rule 1047 to enhance the recently-implemented options halt rule to indicate that if trading has not been resumed on the primary listing market for the underlying security once ten minutes has passed after an underlying security was paused, the Exchange may resume options trading if trading has resumed on at least one national securities exchange; and that the Exchange will continue certain processes during the halt (maintain booked orders, accept orders, and process cancels).

On June 10, 2010, the Exchange filed an immediately effective proposal to establish the options halt rule in new subsection (e) to Rule 1047.[4] Subsection (e) states that trading on the Exchange in any option contract shall be halted whenever trading in the underlying security has been paused by the primary listing market. The rule states further that trading in such halted options contracts may be resumed upon a determination by the Exchange that the conditions that led to the pause are no longer present and that the interests of a fair and orderly market are best served by a resumption of trading, which in no circumstances will be before the Exchange has received notification that the underlying security has resumed trading on at least one exchange.

On the same day as the Exchange's options halt rule filing, Chicago Board Options Exchange ("CBOE") filed an options halt that is similar to the Exchange's options halt rule but has some additional elements.[5] The Exchange's current filing is based on the CBOE filing.

The Exchange believes that it should continue certain processes and procedures independently of an options trading halt. Specifically, the Exchange proposes to state in Rule 1047(e)(ii) that during the options halt, the Exchange will maintain existing orders on the book, accept orders, and process cancels.

Moreover, the Exchange believes that it should have the ability to resume options trading within certain parameters after an underlying halt. Specifically, The Exchange proposes to state in subsection (e)(i) that if trading has not been resumed on the primary listing market for the underlying security after ten minutes have passed

[12] 17 CFR 200.30–3(a)(12).

[1] 15 U.S.C. 78s(b)(1).

[2] 17 CFR 240.19b–4.

[3] The options halt rule is also known as the options pause rule.

[4] *See* Securities Exchange Act Release No. 62269 (June 10, 2010), 75 FR 34491, (June 17, 2010) (Phlx–2010–82)(notice of filing and immediate effectiveness regarding options halt rule). The Exchange proposed the options halt rule after consultation with Commission staff regarding uniform market-wide trading pause standards for certain individual stocks that experience rapid price movement and for individual equity options overlying those stocks. For a similar options halt rule proposed by another options exchange, *see* Securities Exchange Act Release No. 62270 (June 10, 2010), 75 FR 34510, (June 17, 2010) (NASDAQ–2010–071) (notice of filing and immediate effectiveness regarding options halt rule).

[5] The additional elements include the following: that if trading has not been resumed on the primary listing market for the underlying security once ten minutes passed after an underlying security was paused, the Exchange may resume options trading if at least one market has resumed trading in the underlying; and that the Exchange will continue certain processes during the halt (maintain booked orders, accept orders, and process cancels). *See* Securities Exchange Act Release No. 62272 (June 10, 2010), 75 FR 34509, (June 17, 2010) (CBOE 2010–055).

since the underlying security was paused by the primary listing market, the Exchange may resume trading in options contracts if the underlying security has resumed trading on at least one national securities exchange.[6]

The Exchange believes that the proposals, individually and together, enhance and strengthen the options halt rule and its application. The proposals will be immediately implemented upon effectiveness of the filing.

The Exchange believes that the options halt rule as amended ensures that the Exchange has the ability to maintain fair and orderly markets in options upon the imposition of a single stock trading pause by the listing market for the underlying security.

2. Statutory Basis

The Exchange believes that its proposal is consistent with Section 6(b) of the Act[7] in general, and furthers the objectives of Section 6(b)(5) of the Act[8] in particular, in that it is designed to prevent fraudulent and manipulative acts and practices, to promote just and equitable principles of trade, to foster cooperation and coordination with persons engaged in facilitating transactions in securities, and to remove impediments to and perfect the mechanisms of a free and open market and a national market system. Specifically, the Exchange believes that the proposal benefits customers by enhancing the current options halt rule to clarify the circumstances under which the Exchange may resume options trading, and that the Exchange will continue certain order processing and cancellation functions during a halt.

B. Self-Regulatory Organization's Statement on Burden on Competition

The Exchange does not believe that the proposed rule change will impose any burden on competition not necessary or appropriate in furtherance of the purposes of the Act.

[6] No changes to the Exchange's trading processes are otherwise contemplated by this proposal. For example, transactions that occur between the time the pause is imposed on the listing market and the halt is processed on PHLX may be nullified pursuant to Rule 1092(c)(iv)(B). And orders in the affected option that are received during the halt on the Exchange will be treated as pre-opening orders and will be included in the re-opening process upon the resumption of trading on the listing market for the underlying security pursuant to Rule 1017(h).

[7] 15 U.S.C. 78f(b).

[8] 15 U.S.C. 78f(b)(5).

C. Self-Regulatory Organization's Statement on Comments on the Proposed Rule Change Received From Members, Participants, or Others

No written comments were either solicited or received.

III. Date of Effectiveness of the Proposed Rule Change and Timing for Commission Action

The Exchange believes that the foregoing proposed rule change may take effect upon filing with the Commission pursuant to Section 19(b)(3)(A)[9] of the Act and Rule 19b–4(f)(6)(iii) thereunder[10] because the foregoing proposed rule change does not: (i) Significantly affect the protection of investors or the public interest; (ii) impose any significant burden on competition; and (iii) become operative for 30 days from the date on which it was filed, or such shorter time as the Commission may designate. The Exchange has asked the Commission to waive the 30-day operative delay so that the proposal may become operative upon filing. The Commission notes that the proposed rule change clarifies certain aspects of the Exchange's rule regarding how orders will be handled during options trading halts caused by a pause in the trading of the underlying security and also clarifies when the Exchange may resume trading when a trading pause in the underlying security is prolonged for unknown reasons. The proposed rule change does not raise any new substantive issues. For these reasons, the Commission believes that the waiver of the 30-day operative delay is consistent with the protection of investors and the public interest.[11]

At any time within 60 days of the filing of the proposed rule change, the Commission may summarily abrogate such rule change if it appears to the Commission that such action is necessary or appropriate in the public interest, for the protection of investors, or otherwise in furtherance of the purposes of the Act.

IV. Solicitation of Comments

Interested persons are invited to submit written data, views, and arguments concerning the foregoing, including whether the proposed rule change is consistent with the Act. Comments may be submitted by any of the following methods:

Electronic Comments

- Use the Commission's Internet comment form (*http://www.sec.gov/rules/sro.shtml*); or
- Send an e-mail to *rule-comments@sec.gov*. Please include File Number SR–Phlx–2010–96 on the subject line.

Paper Comments

- Send paper comments in triplicate to Elizabeth M. Murphy, Secretary, Securities and Exchange Commission, 100 F Street, NE., Washington, DC 20549–1090.

All submissions should refer to File Number SR–Phlx–2010–96. This file number should be included on the subject line if e-mail is used. To help the Commission process and review your comments more efficiently, please use only one method. The Commission will post all comments on the Commission's Internet Web site (*http://www.sec.gov/rules/sro.shtml*).

Copies of the submission, all subsequent amendments, all written statements with respect to the proposed rule change that are filed with the Commission, and all written communications relating to the proposed rule change between the Commission and any person, other than those that may be withheld from the public in accordance with the provisions of 5 U.S.C. 552, will be available for Web site viewing and printing in the Commission's Public Reference Room. Copies of the filing also will be available for inspection and copying at the principal office of the Exchange. All comments received will be posted without change; the Commission does not edit personal identifying information from submissions. You should submit only information that you wish to make available publicly.

All submissions should refer to File Number SR–Phlx–2010–96 and should be submitted on or before August 16, 2010.

For the Commission, by the Division of Trading and Markets, pursuant to delegated authority.[12]

Florence E. Harmon,

Deputy Secretary.

[FR Doc. 2010–18166 Filed 7–23–10; 8:45 am]

BILLING CODE 8010–01–P

[9] 15 U.S.C. 78s(b)(3)(A).

[10] 17 CFR 240.19b–4(f)(6)(iii). In addition, Rule 19b–4(f)(6) requires a self-regulatory organization to give the Commission written notice of its intent to file the proposed rule change at least five business days prior to the date of filing of the proposed rule change, or such shorter time as designated by the Commission. The Exchange has satisfied this requirement.

[11] For purposes only of waiving the 30-day operative delay of this proposal, the Commission has considered the proposed rule's impact on efficiency, competition and capital formation. 15 U.S.C. 78c(f).

[12] 17 CFR 200.30–3(a)(12).

SECURITIES AND EXCHANGE COMMISSION

[Release No. 34–62522; File No. SR–CBOE–2010–067]

Self-Regulatory Organizations; Chicago Board Options Exchange, Incorporated; Notice of Filing and Immediate Effectiveness of Proposed Rule Change To Extend Two Pilot Programs Related to the Exchange's Automated Improvement Mechanism Until July 18, 2011

July 16, 2010.

Pursuant to Section 19(b)(1) of the Securities Exchange Act of 1934 ("Act"),[1] and Rule 19b–4 thereunder,[2] notice is hereby given that on July 15, 2010, the Chicago Board Options Exchange, Incorporated ("Exchange" or "CBOE") filed with the Securities and Exchange Commission ("Commission") the proposed rule change as described in Items I and II below, which Items have been prepared by the Exchange. The Exchange filed the proposal as a "non-controversial" proposed rule change pursuant to Section 19(b)(3)(A)(iii) of the Act[3] and Rule 19b–4(f)(6) thereunder.[4] The Commission is publishing this notice to solicit comments on the proposed rule change from interested persons.

I. Self-Regulatory Organization's Statement of the Terms of Substance of the Proposed Rule Change

The Exchange proposes to extend two pilot programs related to the Exchange's Automated Improvement Mechanism. The text of the proposed rule change is available on the Exchange's Web site (*http://www.cboe.org/Legal)*, at the Exchange's Office of the Secretary and at the Commission.

II. Self-Regulatory Organization's Statement of the Purpose of, and Statutory Basis for, the Proposed Rule Change

In its filing with the Commission, the self-regulatory organization included statements concerning the purpose of and basis for the proposed rule change and discussed any comments it received on the proposed rule change. The text of those statements may be examined at the places specified in Item IV below. The Exchange has prepared summaries, set forth in sections A, B, and C below, of the most significant parts of such statements.

A. Self-Regulatory Organization's Statement of the Purpose of, and the Statutory Basis for, the Proposed Rule Change

1. Purpose

In February, 2006, CBOE obtained approval of a filing adopting the AIM auction process.[5] AIM exposes certain orders electronically to an auction process to provide such orders with the opportunity to receive an execution at an improved price. The AIM auction is available only for orders that an Exchange member represents as agent and for which a second order of the same size as the "Agency Order" (and on the opposite side of the market) is also submitted (effectively stopping the Agency Order at a given price).

Two components of AIM were approved on a pilot basis: (1) That there is no minimum size requirement for orders to be eligible for the auction, and (2) that the auction will conclude prematurely anytime there is a quote lock on the Exchange pursuant to Rule 6.45A(d).[6] In connection with the pilot programs, the Exchange has submitted to the Commission reports providing detailed AIM auction and order execution data. In July 2006, the Exchange extended the pilot program until July 18, 2007.[7] In July 2007, the Exchange extended the pilot program until July 18, 2008.[8] In July 2008, the Exchange extended the pilot program until July 18, 2009.[9] In July 2009, the Exchange extended the pilot program until July 17, 2010.[10] The proposed rule change merely extends the duration of the pilot programs until July 18, 2011. Extending the pilots for an additional year will allow the Commission more time to consider the impact of the pilot programs on AIM order executions.

2. Statutory Basis

The Exchange believes the proposed rule change is consistent with Section 6(b) of the Exchange Act in general[11] and furthers the objectives of Section 6(b)(5)[12] in particular in that by allowing the Commission additional time to evaluate the AIM pilot programs, it should serve to remove impediments to and perfect the mechanism of a free and open market and a national market system, and protect investors and the public interest.

B. Self-Regulatory Organization's Statement on Burden on Competition

CBOE does not believe that the proposed rule change will impose any burden on competition not necessary or appropriate in furtherance of the purposes of the Act.

C. Self-Regulatory Organization's Statement on Comments on the Proposed Rule Change Received From Members, Participants, or Others

The Exchange neither solicited nor received comments on the proposal.

III. Date of Effectiveness of the Proposed Rule Change and Timing for Commission Action

The Exchange has filed the proposed rule change pursuant to Section 19(b)(3)(A)(iii) of the Act[13] and Rule 19b–4(f)(6) thereunder.[14] Because the proposed rule change does not: (i) Significantly affect the protection of investors or the public interest; (ii) impose any significant burden on competition; and (iii) by its terms, become operative prior to 30 days from the date on which it was filed, or such shorter time as the Commission may designate, if consistent with the protection of investors and the public interest, the proposed rule change has become effective upon filing with the Commission pursuant to Section 19(b)(3)(A) of the Act[15] and Rule 19b–4(f)(6)(iii) thereunder.[16]

The Exchange has requested that the Commission waive the 30-day operative delay period. The Commission believes that waiver of the 30-day operative delay period is consistent with the

[1] 15 U.S.C. 78s(b)(1).

[2] 17 CFR 240.19b–4.

[3] 15 U.S.C. 78s(b)(3)(A)(iii).

[4] 17 CFR 240.19b–4(f)(6).

[5] *See* Securities Exchange Act Release No. 53222 (February 3, 2006), 71 FR 7089 (February 10, 2006) approving SR–CBOE–2005–60.

[6] That rule relates to situations where a Market-Maker's quote interacts with the quote of another CBOE Market-Maker (*i.e.* when internal quotes lock).

[7] *See* Securities Exchange Act Release No. 54147 (July 14, 2006), 71 FR 41487 (July 21, 2006) approving SR–CBOE–2006–64.

[8] *See* Securities Exchange Act Release No. 56094 (July 18, 2007), 72 FR 40910 (July 25, 2007) approving SR–CBOE–2007–80.

[9] *See* Securities Exchange Act Release No. 58196 (July 18, 2008), 73 FR 43803 (July 28, 2008) approving SR–CBOE–2008–76. In this filing, the Exchange agreed to provide additional information relating to the AIM auctions each month in order to aid the Commission in its evaluation of the pilot program. The Exchange will continue to provide this information.

[10] *See* Securities Exchange Act Release No. 60338 (July 24, 2009), 74 FR 36803 (July 24, 2009) approving SR–CBOE–2009–051.

[11] 15 U.S.C. 78f(b).

[12] 15 U.S.C. 78f(b)(5).

[13] 15 U.S.C. 78s(b)(3)(A)(iii).

[14] 17 CFR 240.19b–4(f)(6).

[15] 15 U.S.C. 78s(b)(3)(A).

[16] 17 CFR 240.19b–4(f)(6)(iii). In addition, Rule 19b–4(f)(6)(iii) requires the Exchange to give the Commission written notice of the Exchange's intent to file the proposed rule change, along with a brief description and text of the proposed rule change, at least five business days prior to the date of filing of the proposed rule change, or such shorter time as designated by the Commission. The Exchange has met this requirement.

protection of investors and the public interest because such waiver will allow the AIM pilot programs to continue without interruption. Accordingly, the Commission designates the proposed rule change operative upon filing with the Commission.[17]

At any time within 60 days of the filing of the proposed rule change, the Commission may summarily abrogate such rule change if it appears to the Commission that such action is necessary or appropriate in the public interest, for the protection of investors, or otherwise in furtherance of the purposes of the Act.

IV. Solicitation of Comments

Interested persons are invited to submit written data, views, and arguments concerning the foregoing, including whether the proposed rule change is consistent with the Act. Comments may be submitted by any of the following methods:

Electronic Comments

- Use the Commission's Internet comment form (*http://www.sec.gov/rules/sro.shtml*); or
- Send an e-mail to *rule-comments@sec.gov*. Please include File Number SR–CBOE–2010–067 on the subject line.

Paper Comments

- Send paper comments in triplicate to Elizabeth M. Murphy, Secretary, Securities and Exchange Commission, 100 F Street, NE., Washington, DC 20549–1090.

All submissions should refer to File Number SR–CBOE–2010–067. This file number should be included on the subject line if e-mail is used. To help the Commission process and review your comments more efficiently, please use only one method. The Commission will post all comments on the Commission's Internet Web site (*http://www.sec.gov/rules/sro.shtml*). Copies of the submission, all subsequent amendments, all written statements with respect to the proposed rule change that are filed with the Commission, and all written communications relating to the proposed rule change between the Commission and any person, other than those that may be withheld from the public in accordance with the provisions of 5 U.S.C. 552, will be available for Web site viewing and printing in the Commission's Public Reference Room, 100 F Street, NE., Washington, DC 20549, on official business days between the hours of 10 a.m. and 3 p.m. Copies of such filing also will be available for inspection and copying at the principal office of the Exchange. All comments received will be posted without change; the Commission does not edit personal identifying information from submissions. You should submit only information that you wish to make available publicly. All submissions should refer to File Number SR–CBOE–2010–067 and should be submitted on or before August 16, 2010.

For the Commission, by the Division of Trading and Markets, pursuant to delegated authority.[18]

Florence E. Harmon,

Deputy Secretary.

[FR Doc. 2010–18164 Filed 7–23–10; 8:45 am]

BILLING CODE 8010–01–P

[17] For purposes only of waiving the operative delay for this proposal, the Commission has considered the proposed rule's impact on efficiency, competition, and capital formation. *See* 15 U.S.C. 78c(f).

[18] 17 CFR 200.30–3(a)(12).

SECURITIES AND EXCHANGE COMMISSION

[Release No. 34–62519; File No. SR–Phlx–2010–79]

Self-Regulatory Organizations; NASDAQ OMX PHLX, Inc.; Notice of Filing of Proposed Rule Change Relating to the Establishment of NASDAQ OMX PSX as a Platform for Trading NMS Stocks

July 16, 2010.

Pursuant to Section 19(b)(1) of the Securities Exchange Act of 1934 ("Act"),[1] and Rule 19b–4 thereunder,[2] notice is hereby given that on June 8, 2010, NASDAQ OMX PHLX, Inc. (the "Exchange" or "PHLX") filed with the Securities and Exchange Commission ("Commission") the proposed rule change as described in Items I, II, and III below, which Items have been prepared by the Exchange. The Commission is publishing this notice to solicit comments on the proposed rule change from interested persons.

I. Self-Regulatory Organization's Statement of the Terms of the Substance of the Proposed Rule Change

PHLX is filing a proposed rule change to establish NASDAQ OMX PSX, a new electronic platform for trading NMS stocks. The text of the proposed rule change is available at *http://nasdaqomxphlx.cchwallstreet.com*, on the Commission's Web site at *http://www.sec.gov*, at the Exchange's principal office, and at the Commission's Public Reference Room. PHLX will implement the proposed rule change as soon as practicable following approval by the Commission.

[1] 15 U.S.C. 78s(b)(1).

[2] 17 CFR 240.19b–4.

II. Self-Regulatory Organization's Statement of the Purpose of, and Statutory Basis for, the Proposed Rule Change

In its filing with the Commission, the Exchange included statements concerning the purpose of and basis for the proposed rule change and discussed any comments it received on the proposed rule change. The text of these statements may be examined at the places specified in Item IV below. The Exchange has prepared summaries, set forth in Sections A, B, and C below, of the most significant aspects of such statements.

A. Self-Regulatory Organization's Statement of the Purpose of, and Statutory Basis for, the Proposed Rule Change

1. Purpose

a. Introduction and Background

PHLX proposes to introduce NASDAQ OMX PSX ("PSX" or the "System"), a new fully integrated order display and execution system for all NMS stocks (as defined in SEC Rule 600(b)(47) under Regulation NMS).[3] Like the NASDAQ Market Center and the NASDAQ OMX BX Equities System, PSX will be an open-access, fully electronic system that accommodates diverse business models and trading preferences, using technology to aggregate and display liquidity and make it available for execution. PSX will not list stocks, but rather will trade only stocks listed on other exchanges.

PSX will allow PSX Participants to enter unlimited orders at multiple price levels. Orders of all PSX Participants will be integrated and displayed via data feeds to Participants and other data subscribers. PSX Participants will be able to access the aggregated trading interest of all other PSX Participants in accordance with non-discretionary order execution algorithms. In contrast with most markets, which use a price-time algorithm, however, PSX will use a price-display-pro rata size algorithm. Incoming orders will be allocated first to resting orders with the best price. As among orders with the same price, incoming orders will be allocated first to resting Displayed Orders and then to resting Non-Displayed Orders. As among Displayed Orders at the same price or Non-Displayed Orders at the same price, incoming orders will be

[3] 17 CFR 242.600(b)(47).

allocated among resting orders pro rata based on the size of the resting orders.[4]

Existing PHLX rules that apply to members and member organizations with respect to their activities on PSX are listed in Rule 3202. In addition, two existing PHLX rules, Rule 160 and Rule 188, are being deleted and their content moved into the new 3300 series.[5]

b. System Access

PSX will be open to all member organizations of PHLX that comply with the rules governing PSX.[6] There will not be separate classes of membership. Specifically, unlike the NASDAQ Market Center, PSX will not have a separate class of market makers. Accordingly, PHLX expects that all PSX Participants will participate on consistent terms by entering orders into PSX for the purpose of posting available liquidity and accessing that liquidity.

As provided in proposed Rule 3223, however, PSX will make its facilities available to any electronic communications network ("ECN") or alternative trading system ("ATS") that (i) wishes to use PSX as a means to display the best prices and sizes of orders entered into the ECN or ATS by subscribers of the ECN or ATS, if the ECN or ATS so chooses or is required by SEC Rule 301(b)(3) to display a subscriber's order, and (ii) allow any PHLX member organization the electronic ability to effect a transaction with such priced orders that is equivalent to the ability to effect a transaction with other orders displayed by PSX. Any such ECN or ATS would be required to comply with the terms and conditions of PSX Rule 3223.[7]

Participants will gain access to PSX via direct or indirect electronic linkages utilizing the Financial Information Exchange, or FIX, protocol, as well as proprietary RASH and OUCH protocols. Each protocol is already used and widely accepted by market participants in the NASDAQ Market Center and the NASDAQ OMX BX Equities System, and may be used by Participants for order entry, modification and cancellation, and message transmittal for all securities traded through PSX. Participants will have the ability to establish connectivity to PSX directly or through third-party connectivity providers, including a range of extranets and service bureaus. All of the communications protocols will be publicly available to allow Participants and services bureaus to develop their own front-end software.

As provided in proposed Rule 3211, Participants must execute all applicable agreements with PHLX (including the NASDAQ OMX U.S. Services Agreement[8]); maintain membership in, or access arrangements with a participant of, a clearing agency registered with the Commission that maintains facilities through which PSX compared trades may be settled; comply with all applicable rules and operating procedures of PHLX and the Commission in the use of the System; maintain the physical security of the equipment located on the Participant's premises to prevent the improper use or access to PHLX systems, including unauthorized entry of information into PSX; accept and settle each PSX trade that PSX identifies as having been effected by such Participant, or if settlement is to be made through another clearing member, guarantee the acceptance and settlement of such identified PSX trade by the clearing member on the regularly scheduled settlement date; and input accurate information into the System, including, but not limited to, whether the member organization acted in a principal, agent, or riskless principal capacity. Each PSX Participant will be under a continuing obligation to inform PHLX of noncompliance with any of its registration requirements, and must make such reports to PHLX as it may require.[9] In addition, each Participant must provide such information relating to a specific PHLX rule, SEC rule, or term of a joint industry plan as PHLX regulatory staff may request.[10] PHLX may impose on Participants such temporary restrictions on order entry as PHLX may determine to be necessary to protect the integrity of PSX or other PHLX systems.[11] In addition to proposed rules specific to the operation of PSX, member organizations must comply with existing PHLX rules governing member conduct, to the extent that they are relevant to trading on PSX. PHLX rules applicable to activities of member organizations on PSX are listed in proposed rule 3202.

Failure by a PSX Participant to comply with any of the rules or registration requirements applicable to PSX shall subject such Participant to censure, fine, suspension or revocation of its registration as a PSX Participant, or any other fitting penalty under the rules of the Exchange.[12] In accordance with the procedures of PHLX's Disciplinary Rules (Rules 960.1 through 960.12), PHLX may suspend, condition, limit, prohibit or terminate the authority of a Participant to enter orders in one more securities for violations of applicable requirements or prohibitions, or may terminate access to the System if a Participant fails to meet standards of eligibility or to pay for services rendered.[13]

PHLX disclaims liability for any losses, damages or other claims arising from the use of PSX; however, it may compensate users for losses directly resulting from PSX's actual failure to correctly process an order, message, or other data, in an amount not to exceed the larger of $500,000 per month or the amount of recovery obtained by PHLX under any applicable insurance policy.[14]

When it commences operation, PSX will allow sponsored access in accordance with rules identical to those currently in effect at the NASDAQ Stock Market ("NASDAQ"), which are reflected in proposed Rule 3211(d). When NASDAQ implements recently approved rules governing sponsored access,[15] PSX will adopt and implement identical rules to govern sponsored access. Under the current rules, a Sponsored Participant may obtain authorized access to PSX only if such access is authorized in advance by one or more member organizations as follows:

- Sponsored Participants must enter into and maintain customer agreements with one or more Sponsoring Member

[4] The allocation methodology for odd-lot orders is discussed in greater detail below.

[5] Proposed Rules 3301(a), 3305(a)(1), 3309.

[6] Through a separate filing, PHLX will amend Rule 604 to require all member organizations trading on PSX to register representatives and principals in accordance with rules similar to those governing registration of associated persons of members of the NASDAQ Stock Market. PHLX will, at a later date, amend its rules governing registration of associated persons of member organizations that trade options but not cash equities through PHLX, to reflect consistent registration standards being developed by various self-regulatory organizations in consultation with the Commission.

[7] Specifically, the ATS or ECN must be a PHLX member organization, enter into and comply with applicable agreements, agree that PHLX may disseminate the ECN's or ATS's best priced orders, demonstrate that it is compliance with applicable regulatory requirements, and accept automated executions against orders that it enters into the System.

[8] *http://www.nasdaqtrader.com/content/AdministrationSupport/AgreementsTrading/nasdaq_access_agreement.pdf.*

[9] Proposed Rules 3211(b), 3216.

[10] Proposed Rule 3225.

[11] Proposed Rule 3211(c).

[12] Proposed Rule 3228(a).

[13] Proposed Rules 3221, 3222.

[14] Proposed Rule 3226. Accordingly, existing PHLX Rule 652(a) is not applicable to activity on PSX.

[15] Securities Exchange Act Release No. 61345 (January 13, 2010), 75 FR 32631 (January 20, 2010) (SR–NASDAQ–2008–104). If NASDAQ's rules are superseded by rules adopted by the Commission, then both NASDAQ and PSX will operate in accordance with such rules.

Organizations, establishing proper relationship(s) and account(s) through which the Sponsored Participant may trade on PSX. Such customer agreement(s) must incorporate the following Sponsorship Provisions:

• The Sponsoring Member Organization must acknowledge and agree that:

• All orders entered by a Sponsored Participant and any person acting on behalf of or in the name of such Sponsored Participant and any executions occurring as a result of such orders are binding in all respects on the Sponsoring Member Organization; and

• The Sponsoring Member Organization is responsible for any and all actions taken by a Sponsored Participant and any person acting on behalf of or in the name of such Sponsored Participant.

• A Sponsoring Member Organization must comply with the PHLX Certificate of Incorporation, Bylaws, Rules and procedures with regard to PSX, and a Sponsored Participant must comply with the PHLX Certificate of Incorporation, Bylaws, Rules and procedures with regard to PSX, as if the Sponsored Participant were a PHLX Member Organization.

• A Sponsored Participant must maintain, keep current and provide to the Sponsoring Member Organization a list of individuals authorized to obtain access to PSX on behalf of the Sponsored Participant.

• A Sponsored Participant must familiarize its authorized individuals with all of the Sponsored Participant's obligations and assure that they receive appropriate training prior to any use or access to PSX.

• A Sponsored Participant may not permit anyone other than authorized individuals to use or obtain access to PSX.

• A Sponsored Participant must take reasonable security precautions to prevent unauthorized use or access to PSX, including unauthorized entry of information into PSX, or the information and data made available therein. A Sponsored Participant must understand and agree that it is responsible for any and all orders, trades and other messages and instructions entered, transmitted or received under identifiers, passwords and security codes of authorized individuals, and for the trading and other consequences thereof.

• A Sponsored Participant must acknowledge its responsibility to establish adequate procedures and controls that permit it to effectively monitor its employees', agents', and customers' use and access to PSX for compliance with the terms of the Sponsorship Provisions.

• A Sponsored Participant must pay when due all amounts, if any, payable to the Sponsoring Member Organization, PSX, or any other third parties that arise from the Sponsored Participant's access to and use of PSX. Such amounts include, but are not limited to applicable exchange and regulatory fees.

• The Sponsoring Member Organization must provide PHLX with a Notice of Consent acknowledging its responsibility for the orders, executions and actions of its Sponsored Participants.

• The Sponsored Participant and its Sponsoring Member Organization must have entered into and maintained a User Agreement with PHLX. The Sponsoring Member Organization must designate the Sponsored Participant by name in its User Agreement as such.

c. *Trading of Securities Pursuant to Unlisted Trading Privileges*

With the launch of PSX, PHLX will not resume its listings business. PSX will, however, trade all NMS stocks on an unlisted trading privileges ("UTP") basis; accordingly, all securities that it trades will be registered under Section 12(a) of the Act unless they are subject to an exemption by the Commission that allows them to be listed on a national securities exchange in the absence of such registration. As provided by SEC Rule 12f–5,[16] PHLX may extend unlisted trading privileges to any security for which PHLX has in effect rules providing for transactions in such class or type of security.[17] Accordingly, to support UTP trading of all NMS stocks, existing PHLX Rule 803 is being amended in several respects. First, Rule 803(o) will clearly state that PHLX will not list any securities, and that provisions of Rules 800 through 868 that permit listings will not be effective until PHLX files a proposed rule change under Section 19(b)(2) of the Act to amend its rules to make any changes needed to comply with SEC Rule 10A–3[18] and to incorporate additional qualitative listing standards, and such proposed rule change is approved by the Commission. Second, PHLX is adopting new standards for securities linked to the performance of indexes and commodities (including currencies) and managed fund shares, to reflect the fact that PHLX may engage in UTP trading of these securities,[19] and is modifying Rule 803(f) (Other Securities) to adopt continued listing standards that would be applicable to securities listed under that provision if PHLX resumed its listing business and that contain provisions that are complementary to the new standards for securities linked to commodities. Third, PHLX is deleting current Rules 803(m) and (n), which contain standards for index-linked exchangeable notes and index-linked securities; these security types are covered more comprehensively by the adoption of a standard for securities linked to the performance of indexes and commodities (including currencies). Fourth, PHLX is deleting certain restrictions in Rule 803(o) on the activities of market makers, since PSX's market structure will not allow for a class of market makers.

PHLX is also adopting Rule 3230 to establish additional rules to govern UTP trading of Commodity-Related Securities on PSX. The term "Commodity-Related Security" includes any security that is issued by a trust, partnership, commodity pool or similar entity that invests, directly or through another entity, in any combination of commodities, futures contracts, options on futures contracts, forward contracts, commodity swaps, or other related derivatives, or the value of which is determined by the value of commodities, futures contracts, options on futures contracts, forward contracts, commodity swaps, or other related derivatives. The term "commodity" has the meaning given to it under the Commodity Exchange Act. The rule provides that members and member organizations must provide all purchasers of a newly issued Commodity-Related Security a prospectus for such Commodity-Related

[16] 17 CFR 240.12f–5.

[17] Notably, with respect to new derivative securities products (as defined in SEC Rule 19b–4(e), 17 CFR 240.19b–4(e)) trading on the Exchange, Rule 803(o) requires the distribution of an information circular that includes information on the (1) the special risks of trading the new derivative securities product ("NDSP"); (2) the Exchange's rules that will apply to the NDSP, including the suitability rule (proposed Rule 763); (3) information about the dissemination of value of the underlying assets or indexes; and (4) the risk of trading during the period from 9 a.m. to 9:30 a.m. and from 4 p.m. to 5 p.m. due to the lack of calculation or dissemination of the underlying index value, the Intraday Indicative Value, the Indicative Optimized Portfolio Value or other comparable estimate of the value of a share of the NDSP. Rule 803(o) also requires that members and member organizations adhere to applicable prospectus delivery requirements of the Securities Act of 1933, and requires that the Exchange enter into comprehensive surveillance sharing agreements with markets trading components of the index or portfolio on which the NDSP is based to the same extent as the listing market of the NDSP.

[18] 17 CFR 240.10A–3.

[19] Rule 803(m) and (n) (as proposed to be amended). As with other standards, however, PHLX will not list these securities until the filing and approval of a proposed rule change to authorize such listing.

Security.[20] The rule further provides that unless otherwise noted, a Commodity-Related Security is eligible for trading during all PSX market sessions (*i.e.* from 9 a.m. through 5 p.m.) if member organizations comply with Rule 3231 when accepting Commodity-Related Security orders for execution in the pre-market session (9 a.m. through 9:30 a.m.) or post-market session (4 p.m. through 5 p.m.).

Rule 3231 provides that no member organization may accept an order from a customer for execution in the pre-market session or post-market session without disclosing to such customer that extended hours trading involves material trading risks, including the possibility of lower liquidity, high volatility, changing prices, unlinked markets, an exaggerated effect from news announcements, wider spreads and any other relevant risk. The absence of an updated underlying index value or intraday indicative value is an additional trading risk in extended hours for Derivative Securities Products (as defined in Rule 3100). With these changes, as well as the adoption of the other rules contained in this filing, PHLX believes that it will have rules in place to allow the UTP trading of all NMS stocks.

d. Entry and Processing of Orders

Only orders for NMS stocks may be entered and executed through PSX.[21] PSX is the only venue on the Exchange for the entry and execution of orders in NMS stocks.[22] Participants may submit multiple orders at multiple price levels, which PSX will manage and display, consistent with the parameters of each order.[23] PSX will time-stamp each order upon receipt, although as discussed below, the time stamp does not determine the order's ranking for execution purposes.[24] The System does not allow Participants to display orders on an attributable basis.[25] However, orders may be entered either as Displayed Orders, in which case they will be displayed as individual orders, each with an identical anonymous identifier, in market data disseminated by PSX concerning resting orders, or may be entered as Non-Displayed Orders, in which case they will not be displayed but nevertheless remain available for potential execution against incoming orders.[26]

Displayed Orders will be displayed to Participants through a system book feed. In addition, the aggregate size of all orders at the best price to buy and sell resident in the System will be transmitted for display to the appropriate network processor unless the aggregate size is less than one round lot.[27] However, Non-Displayed Orders and reserve size will not be displayed.[28]

Marketable orders are directed to resting orders for execution. Non-marketable orders are made available for execution by incoming orders, and either displayed or not displayed, as directed by the entering party. Upon entry of a marketable order, PSX will identify the order(s) against which the incoming order will be executed, based on the algorithm described below. The System will automatically execute against such orders and send the relevant Participant(s) an execution report.

e. Order Types and Time-in-Force Designations

An order may be of a size up to 999,999 shares[29] and must indicate whether it is a buy, long sale, or short sale.[30] The minimum increment for orders priced at $1.00 or above will be $0.01.[31] The minimum increment for orders priced below $1.00 will be $0.0001.[32] All orders are firm and automatically executable for their displayed and non-displayed size in the System.[33] The System will operate from 9 a.m. through 5 p.m. Eastern Time, and except as noted below, all orders types and times-in-force may be entered during that period.[34] PSX will not have any specialized opening or closing processes. Rather, the System will be open for order entry at 9 a.m., and will immediately start processing orders as they are entered.[35]

The following order types will be available in PSX:[36]

• "Limit Orders" are orders to buy or sell a stock at a specified price or better.

• "Pegged Orders" are orders that, after entry, have their price automatically adjusted by the System in response to changes in either the PSX inside bid or offer or the best bid or offer in the national market system, as appropriate. A Pegged Order can specify that its price will equal the inside quote on the same side of the market ("Primary Peg"), the opposite side of the market ("Market Peg"), or the midpoint of the national best bid and offer ("Midpoint Peg"). A Pegged Order may have a limit price beyond which the order shall not be executed. In addition, the Primary Peg and Market Peg Orders may also establish their pricing relative to the appropriate bids or offers by the selection of one or more offset amounts that will adjust the price of the order by the offset amount selected. A Midpoint Peg Order is priced based upon the national best bid and offer, excluding the effect that the Midpoint Peg Order itself has on the inside bid or inside offer. Midpoint Peg Orders will never be displayed. A Midpoint Peg Order may be executed in sub-pennies if necessary to obtain a midpoint price. A Pegged Order may be entered only between 9:30 a.m. and 4 p.m.[37]

• "Minimum Quantity Orders" are orders that require that a specified minimum quantity of shares be obtained, or the order is cancelled. Minimum Quantity Orders may only be entered with a time-in-force designation of System Hours Immediate or Cancel.

• "Intermarket Sweep Orders" or "ISOs" are limit orders that are executed by the System at multiple price levels, without consideration of protected quotations of other market centers within the meaning of Rule 600(b) of Regulation NMS under the Act.[38] Simultaneously with the routing of an ISO to the System, one or more additional limit orders, as necessary, must be routed by the entering party to execute against the full displayed size of any protected bid or protected offer (as defined in Rule 600(b) of Regulation NMS under the Act) in the case of a limit order to sell or buy with a price that is superior to the limit price of the limit order identified as an ISO. These additional routed orders must also be identified as ISOs.

• "Price to Comply Orders" are orders that if, at the time of entry, would lock or cross the quotation of an external market, the order will be priced to the current low offer (for bids) or to the current best bid (for offers) and displayed at a price one minimum price increment lower than the offer (for bids) or higher than the bid (for offers). The displayed and undisplayed prices of a Price to Comply order may be adjusted once or multiple times depending upon the method of order entry and changes

[20] Provisions from the corresponding NASDAQ rule, Rule 4630, that govern the conduct of market makers in Commodity-Related Securities have been omitted because PSX will not have market makers.

[21] Proposed Rule 3305(a)(1).

[22] *Id.*

[23] Proposed Rule 3306.

[24] *Id.*

[25] Proposed Rule 3301(a).

[26] Proposed Rule 3301(e).

[27] Proposed Rule 3306(c)(1) and (2).

[28] Proposed Rule 3306(c)(3).

[29] Proposed Rule 3301(g).

[30] Proposed Rule 3305.

[31] Proposed Rule 3213(a).

[32] *Id.*

[33] Proposed Rule 3213(b).

[34] Proposed Rules 3217 and 3306(a)(3).

[35] Proposed Rule 3302.

[36] Proposed Rule 3301(e) and (f).

[37] Proposed Rule 3305(a)(1)(C).

[38] 17 CFR 242.600(b).

to the prevailing national best bid or offer.

• "Post-Only Orders" are orders that if, at the time of entry, would lock an order on the System, the order will be re-priced and displayed by the System to one minimum price increment (i.e., $0.01 or $0.0001) below the current low offer (for bids) or above the current best bid (for offers).

• "Non-Displayed Orders" are limit orders that are not displayed in the System, but nevertheless remain available for potential execution against all incoming orders until executed in full or cancelled. All orders that are not designated as Non-Displayed Orders will be displayed, but without attribution to the entering Participant.

• In addition to the any of the foregoing designations, an order may also be designated as a "Reserve Order." Reserve Orders have both a round-lot displayed size and an additional non-displayed share amount. Both the displayed and non-displayed portions of the Reserve Order are available for potential execution against incoming orders. If the round-lot displayed portion of a Reserve Order is reduced to less than a normal unit of trading, the System will replenish the display portion from reserve up to at least a single round-lot amount.

The following times-in-force will be available in PSX.[39] Except as noted above in connection with Minimum Quantity Orders, any time-in-force may be combined with any order type.

• "System Hours Immediate or Cancel" or "SIOC" means that if, after entry into the System, an order (or a portion thereof) is not marketable, the order (or unexecuted portion thereof) will be canceled and returned to the entering Participant.

• "System Hours Day" or "SDAY" means that if, after entry into the System, an order is not fully executed, the order (or the unexecuted portion thereof) will remain available for potential display and/or execution from 9 a.m. until 5 p.m. Eastern Time on the day it was submitted unless cancelled by the entering party.

• "System Hours Expire Time" or "SHEX" means that if, after entry into the System, an order is not fully executed, the order (or the unexecuted portion thereof) will remain available for potential display and/or execution for the amount of time specified by the entering Participant (up until 5 p.m. on the day entered) unless canceled by the entering Participant.

• "Good-til-market close" or "GTMC" means that if, after entry into the System, an order is not fully executed, the order (or unexecuted portion thereof) will remain available for potential display and/or execution until cancelled by the entering party, or until 4 p.m., after which it shall be returned to the entering party. GTMC orders entered after 4 p.m. will be treated as SIOC orders.

f. Execution of Transactions

Incoming orders that are not marketable against posted interest in the System book will be cancelled or posted to the book, depending on the time-in-force for the order.[40] Incoming marketable orders are executed against orders on the book, and the posted orders are decremented accordingly.[41] To determine the allocation of incoming marketable orders against orders on the book, the System uses a price/display/pro-rata allocation to size that is designed to encourage Participants to display large orders in transparent markets, thereby enhancing the quality of price discovery processes.[42] The algorithm executes trading interest in the System in the following order:

• Price—Better priced trading interest will be executed ahead of inferior-priced trading interest.

• Display—Displayed Orders at a particular price with a size of at least one round lot will be executed ahead of Non-Displayed Orders, the reserve portion of Reserve Orders, and odd-lot orders at the same price. Thus, an order receives priority to the extent of the Participant's willingness to display liquidity: Undisplayed liquidity receives lower priority.

• Pro-Rata Allocation to Size Among Displayed Orders With a Size of One Round Lot or More—As among equally priced Displayed Orders with a size of at least one round lot, the System will allocate round lot portions of incoming executable orders to displayed trading interest within the System pro rata based on the size of the Displayed Orders. Portions of an order that would be executed in a size other than a round lot if they were allocated on a pro rata basis will be allocated for execution against available displayed trading interest on the basis of a random function that assigns probability of execution based on the size of displayed interest. For example, if Displayed Orders to buy at 10 reside on the PSX book with sizes of 6,000 (Participant A) and 4,000 (Participant B), and an incoming order to sell 1,100 at 10 comes into the System, the System will allocate 600 shares of the incoming order to Participant A and 400 shares of the incoming order to Participant B. The remaining 100 shares of the incoming order will be allocated on the basis of a random function that assigns a 60% probability of executing the 100 shares to Participant A and a 40% probability to Participant B.

• Displayed Odd-Lot Orders—As among equally priced Displayed Orders with a size of less than one round lot, the System will allocate incoming orders based on the size of the Displayed Orders, but not in pro rata fashion. Thus, a resting order with a size of 90 shares would get filled in full before an order with a size of 50 shares. If there are two or more odd lot orders of equal size, the System will determine the order of execution on the basis of a random function that assigns each order an equal probability of execution.

• Pro-Rata Allocation to Size Among Non-Displayed Interest With a Size of One Round Lot or More—As among equally priced Non-Displayed Orders and the reserve portion of Reserve Orders (collectively, "non-displayed interest") with a size of at least one round lot, the System will allocate round lot portions of incoming executable orders to non-displayed interest within the System pro rata based on the size of non-displayed interest. Portions of an order that would be executed in a size other than a round lot if they were allocated on a pro rata basis will be allocated for execution against available non-displayed interest on the basis of a random function that assigns probability of execution based on the size of non-displayed interest.

• Non-Displayed Odd-Lot Orders—As among equally priced Non-Displayed Interest with a size of less than one round lot, the System will allocate incoming orders based on the size of the Non-Displayed Interest, but not in pro rata fashion. Thus, a larger odd-lot order would be filled before a smaller odd-lot order. If there are two or more odd lot orders of equal size, the System will determine the order of execution on the basis of a random function that assigns each order an equal probability of execution.

An incoming order with a price that crosses the price of a posted order will execute at the price of the posted order. Accordingly, any potential price improvement resulting from an execution in the System will accrue to taker of liquidity.[43] For example, if a buy order resides on the PSX book at 10 and an incoming sell order priced at 9 comes into the System, the orders will

[39] Proposed Rule 3301(h).

[40] Proposed Rule 3301(h).

[41] Proposed Rule 3307(a)(2).

[42] Proposed Rule 3307(a)(1).

[43] Proposed Rule 3307(a)(3).

execute at 10, with the seller getting $1.00 price improvement.

g. Reporting, Clearance and Settlement; Anonymity

As provided by Rule 3309, executions occurring as a result of orders matched on PSX shall be reported by PHLX to an appropriate consolidated transaction reporting system. The System will identify trades executed pursuant to an exception to or exemption from Rule 611 of Regulation NMS in accordance with specifications approved by the operating committee of the relevant national market system plan for an NMS stock. If a trade is executed pursuant to both the ISO exception of Rule 611(b)(5) or (6) of Regulation NMS and the self-help exception of Rule 611(b)(1) of Regulation NMS, such trade shall be identified as executed pursuant to the ISO exception. PHLX will promptly notify PSX Participants of all executions of their orders as soon as the Exchange is notified that such executions have taken place.

For each execution, PSX will submit a transaction report using PHLX's existing "X" market identifier. The transaction reports produced by the System will indicate the price and size of the transaction, but will not reveal contra party identities.[44] PHLX will reveal a Participant's identity in the following circumstances: (i) When National Securities Clearing Corporation ("NSCC") ceases to act for a Participant, or the Participant's clearing firm, and NSCC determines not to guarantee the settlement of the Participant's trades; (ii) for regulatory purposes or to comply with an order of an arbitrator or court; (iii) if both Participants to the transaction consent; or (iv) unless otherwise instructed by a member organization, PHLX will reveal to a member organization, no later than the end of the day on the date an anonymous trade was executed, when the member organization's order has been decremented by another order submitted by that same member organization.

Transactions will be cleared and settled through NSCC and Depository Trust Corporation ("DTC"), using an exchange omnibus account established at NSCC.[45] All Participants must be members of NSCC, or clear their trades through a clearing firm that is both a member organization of PHLX and a member of NSCC. Member organizations failing to maintain the required clearing arrangements may be removed from access to PSX until such time as a clearing arrangement is reestablished.[46] If a Participant, or a clearing member acting on a Participant's behalf, is reported as constituting a side of a System trade, the Participant or the clearing member must honor the trade on the scheduled settlement date.[47]

h. Trading Halts and Clearly Erroneous Transactions

PSX's provisions on trading halts will mirror those of the NASDAQ Market Center, but will include only those provisions pertinent to securities traded on an unlisted trading privileges basis.

- PSX may halt trading on PSX of a security listed on another exchange: (i) During a trading halt imposed by such exchange to permit the dissemination of material news; or (ii) when such exchange imposes a trading halt in that security because of an order imbalance or influx ("operational trading halt").[48]
- PSX may halt trading in an index warrant whenever regulatory staff concludes that such action is appropriate in the interests of a fair and orderly market and to protect investors. Among the factors that may be considered are the following: (i) Trading has been halted or suspended in underlying stocks whose weighted value represents 20% or more of the index value; (ii) the current calculation of the index derived from the current market prices of the stocks is not available; or (iii) other unusual conditions or circumstances detrimental to the maintenance of a fair and orderly market are present.[49]
- In the case of trust shares, index fund shares, managed fund shares or trust issued receipts, a series of commodity-related securities, securities representing interests in unit investment trusts or investment companies, or any other derivative security (collectively, "Derivatives Security Products") for which an underlying index, indicative optimized portfolio value, intraday indicative value, net asset value, disclosed portfolio, or other comparable estimate of the value of a share is disseminated, PSX will halt trading if there is a temporary interruption in the calculation or wide dissemination of the value. PSX will maintain the trading halt until such time as trading resumes in the listing market.[50] Trading may continue in the case of interruptions that occur outside of regular market hours. However, if an interruption occurs or continues during regular market hours and a halt is called by the listing market, or if a halt occurs after the close of regular market hours and continues the following day, the affected security will be halted and remain halted until the listing market resumes trading.[51]
- PSX will halt trading in a Derivative Security Product for which a net asset value or disclosed portfolio is disseminated if staff becomes aware that the net asset value or disclosed portfolio is not being disseminated to all market participants at the same time. The halt will remain in effect until the listing market resumes trading.[52]
- Following the initiation of an operational trading halt, PSX Participants may immediately resume order entry and trading.[53] In other cases, Participants must wait until PSX releases the security for resumed trading, at a time announced by PSX through Web sites and wire services.[54]
- During a pilot period ending on December 10, 2010, if a primary listing market issues an individual stock trading pause in any of the securities covered by the pilot, the Exchange will pause trading in that security until trading has resumed on the primary listing market. If, however, trading has not resumed on the primary listing market and ten minutes have passed since the individual stock trading pause message has been received from the responsible single plan processor, the Exchange may resume trading in such stock. The securities covered by the pilot are those stocks included in the S&P 500® Index.
- PSX will also halt trading upon SEC request, including in accordance with standing requests for "circuit breaker"market-wide halts in the event of a major market break.[55]

PHLX will adopt a rule to govern breaking of clearly erroneous transactions.[56]

[44] Proposed Rule 3310.

[45] Proposed Rule 3218. In the event that a registered clearing agency other than NSCC began offering continuous net settlement services, participants would also be permitted to use that clearing agency rather than NSCC.

[46] Proposed Rule 3228.

[47] Proposed Rule 3227.

[48] Proposed Rule 3100(a)(1).

[49] Proposed Rule 3100(a)(2).

[50] Proposed Rule 3100(a)(3).

[51] Proposed Rule 3100(b).

[52] Proposed Rule 3100(a)(3).

[53] Proposed Rule 3100(a)(1).

[54] Proposed Rule 3100(c)(2).

[55] PLHX [sic] Rule 133. As a result of precipitous declines in the prices of certain securities on May 6, 2010, the Commission and the national securities exchanges are currently evaluating the advisability of modifying marketwide rules on trading halts due to extraordinary market volatility, such as those reflected in PHLX Rule 133. PHLX will modify Rule 133 to maintain consistency with corresponding rules of other exchanges as soon as consensus is reached concerning the appropriate marketwide standard.

[56] Proposed Rule 3312. The proposed PSX rule is identical to the rules recently adopted by NASDAQ and other exchanges to provide a consistent and comprehensive framework for reviewing and

As was true for XLE, PHLX's former cash equity trading platform, appeals from determination regarding trades made by PHLX staff will be made to the Options Trade Review Committee ("OTRC"), a committee of industry and non-industry experts established under the PHLX By-Laws. As reflected in Section 10–10 of the By-Laws, 20% of the members of the OTRC must represent PHLX member organizations, but no more than 50% of the committee's members may be employed by firms that are market makers or that derive more than 10% of their revenues from market making. This is identical to the compositional requirements of NASDAQ's Market Operations Review Committee, which performs a comparable function under NASDAQ rules.[57]

i. Regulation NMS Compliance

As provided in Rules 3301(a) and 3306(c)(4), with respect to the operation of PSX, PHLX will implement such systems, procedures, and rules as are necessary to render it capable of meeting the requirements for automated quotations,[58] and immediately to identify its quotations as manual whenever it has reason to believe it is not capable of displaying automated quotations. PHLX will adopt policies and procedures for notifying member organizations and other trading centers that it has reason to believe it is not capable of displaying automated quotations or, once manual, that it has restored the ability to display automated quotations and is preparing to identify its quotation as automated. In addition, PHLX will adopt policies and procedures for responding to notices that it receives from other trading centers indicating that they have elected to use the "self-help" exception of Rule 611(b)(1) of Regulation NMS under the Act.[59]

PSX will not route orders to other market centers. Rather, to ensure compliance with Regulation NMS, PSX Rule 3305 provides that in addition to such other designations as may be chosen by a Participant, all orders that are not entered with a time in force of "System Hours Immediate or Cancel"[60] must be designated as an Intermarket Sweep Order, a Pegged Order, a Price to Comply Order, or a Post-Only Order, and all orders will be processed in a manner that avoids trading through protected quotations and avoids locked and crossed markets. Specifically, any orders that are entered into the System that would lock or cross another order in the System will be executed to avoid a lock or cross.[61]

- A System Hours Immediate or Cancel Order is compliant with Regulation NMS because it will not, by its terms, execute or post at a price that would result in a trade-through of a protected quotation or lock or cross another market.
- A Pegged Order is compliant with Regulation NMS because it is continually re-priced to avoid locking or crossing.
- In entering an Intermarket Sweep Order, the Participant represents that it is simultaneously routing one or more additional limit orders, as necessary, to execute against the full displayed size of any protected bid or offer (as defined in Rule 600(b) of Regulation NMS) in the case of a limit order to sell or buy with a price that is superior to the limit price of the order identified as an Intermarket Sweep Order.[62] These additional routed orders must also be identified as Intermarket Sweep Orders. As provided by Regulation NMS, PSX will automatically execute orders identified as Intermarket Sweep Orders. Member organizations will be responsible for ensuring that their use of Intermarket Sweep Orders complies with Regulation NMS, and PHLX's T+1 surveillance program, administered by the Financial Industry Regulatory Authority ("FINRA") under a regulatory services agreement (the "FINRA RSA") will monitor member organizations' use of Intermarket Sweep Orders.
- If, at the time of entry, a Price to Comply Order would lock or cross the quotation of an external market, the order will be priced to the current low offer (for bids) or to the current best bid (for offers) but displayed at a price one minimum price increment lower than the offer (for bids) or higher than the bid (for offers). Thus, an incoming order priced to execute against the displayed price will receive the superior undisplayed price.[63] The displayed and undisplayed prices of a Price to Comply order may be adjusted once or multiple times depending upon the method of order entry and changes to the prevailing national best bid/best offer.[64]
- If, at the time of entry, a Post-Only Order would lock an order on the System, the order will be re-priced and displayed by the System to one minimum price increment (i.e., $0.01 or $0.0001) below the current low offer (for bids) or above the current best bid (for offers).[65]

By requiring all orders to be entered with one of these designations, PSX will ensure that all orders will either be priced or cancelled in a manner consistent with avoidance of trade-throughs and locked and crossed markets, or will execute as Intermarket Sweep Orders along with other Intermarket Sweep Orders sent to protected quotes. Because PSX will not route to other market centers,[66] its policies and procedures under Rule 611(a) under Regulation NMS[67] will contemplate reliance on information provided by the NASDAQ Market Center for purposes of determining whether another trading center is experiencing a failure, material delay, or

breaking trades. As a result of precipitous declines in the prices of certain securities on May 6, 2010, however, the Commission and the national securities exchanges are currently evaluating the advisability of further changes to clearly erroneous rules. PHLX will modify its clearly erroneous rule to maintain consistency with the corresponding NASDAQ Stock Market rule as soon as consensus is reached concerning the appropriate marketwide standard.

[57] By-Laws of The NASDAQ Stock Market LLC, Article III, Section 6.

[58] As defined in Rule 600(b) of Regulation NMS under the Act, 17 CFR 242.600(b), the term "quotation"includes the "bid price or the offer price communicated by a member of a national securities exchange * * * to any broker or dealer, or to any customer, at which it is willing to buy or sell one or more round lots of an NMS security, either as principal or agent." Thus, the term "quotation"includes orders entered into the System by PSX Participants, notwithstanding the fact that PSX will not have market makers with obligations to maintain continuous two-sided quotations. Under Rule 602 of Regulation NMS, brokers and dealers are required to communicate to a national securities exchange or national securities association their best bids, best offers, and quotation sizes. By displaying orders communicated to it by its members and complying with the requirements for automation described in Rule 600(b)(3), PSX will display "automated quotations" within the meaning of that rule, and therefore its best bid and best offer will constitute "protected quotations" entitled to trade-through protection under Regulation NMS.

[59] 17 CFR 242.611(b)(1).

[60] A "System Hours Immediate or Cancel" order is an immediate or cancel order that may be entered between 9 a.m. and 5 p.m. Eastern Time, PSX's hours of operation. If a System Hours Immediate or Cancel order (or a portion thereof) is not marketable, the order (or unexecuted portion thereof) is canceled and returned to the entering Participant.

[61] Proposed Rule 3213(c). In addition, as discussed below, members may enter orders that are re-priced if they would lock or cross so as to avoid executing.

[62] Proposed Rule 3301(f)(6).

[63] For example, if the national best bid and best offer is $9.97 × $10.00, and a participant enters a price to comply order to buy 10,000 shares at $10.01, the order will display at $9.99, but will reside on the System book at $10.00. If a seller then enters an order at $9.99, it will execute at $10.00, up to the full 10,000 shares of the order. Proposed Rule 3301(f)(8).

[64] Proposed Rule 3301(f)(8).

[65] For example, if the System best bid and best offer is $9.97 × $10.00, and a participant enters a Post-Only Order to buy at $10.01, the order will be repriced and displayed at $9.99. If a seller enters an order at $9.96, the order will be repriced and displayed at $9.98. Proposed Rule 3301(f)(10).

[66] Proposed Rule 3305(b).

[67] 17 CFR 242.611(a).

malfunction of its systems or equipment within the meaning of Rule 611(b)(1).[68]

Rule 3213(c)(2) contains PSX's rules adopted pursuant to SEC Rule 610(d) under Regulation NMS [69] with respect to inter-market locks and crosses. Although the System-enforced requirements with respect to order entry and execution generally prevent locked and crossed markets, adoption of the rule is needed to comply with the requirements of Rule 610(d) and to provide a clear rule barring conduct that could evade the System-enforced requirements, such as entry of an incorrectly marked Intermarket Sweep Order. Terms used in the rule have the meanings assigned to them by Rule 600 under Regulation NMS.[70] Subject to certain exceptions, the Rule 3213(c) provides that member organizations shall reasonably avoid displaying, and shall not engage in a pattern or practice of displaying any quotations [71] that lock or cross a protected quotation, and any manual quotations that lock or cross a quotation previously disseminated pursuant to an effective national market system plan. Exceptions exist for instances where (i) the locking or crossing quotation was displayed at a time when the trading center displaying the locked or crossed quotation was experiencing a failure, material delay, or malfunction of its systems or equipment; (ii) the locking or crossing quotation was displayed at a time when a protected bid was higher than a protected offer in the NMS stock; (iii) the locking or crossing quotation was an automated quotation, and the Exchange member organization displaying such automated quotation simultaneously routed an Intermarket Sweep Order to execute against the full displayed size of any locked or crossed protected quotation; and (iv) the locking or crossing quotation was a manual quotation that locked or crossed another manual quotation, and the Exchange member organization displaying the locking or crossing manual quotation simultaneously routed an Intermarket Sweep Order to execute against the full displayed size of the locked or crossed manual quotation. If a member organization displays a manual quotation that locks or crosses a quotation previously disseminated pursuant to an effective national market system plan, such member organization shall promptly either withdraw the manual quotation or route an Intermarket Sweep Order to execute against the full displayed size of the locked or crossed quotation.

j. Regulatory Framework

Under the FINRA RSA, FINRA will provide a range of regulatory services, including T+1 surveillance, investigation, and enforcement with respect to PHLX rules, arbitration services, and membership services. PHLX will perform other regulatory services, such as real-time market surveillance, using personnel employed by NASDAQ OMX or one of its subsidiaries, including PHLX. NASDAQ OMX, PHLX, NASDAQ, and NASDAQ OMX BX (PHLX, NASDAQ, and NASDAQ OMX BX collectively, the "SRO Subsidiaries") are parties to a regulatory services agreement (the "Intercompany RSA") pursuant to which employees and contractors of each party ("Personnel") may perform regulatory services for each of the SRO Subsidiaries. All regulatory services performed for PHLX under the Intercompany RSA are subject to the direction, authority, and oversight of PHLX's chief regulatory officer ("CRO") and the regulatory oversight committee ("ROC") of its Board of Governors. All Personnel are subject to the jurisdiction, authority and oversight of the CRO and ROC of PHLX to the extent of the services that they provide to PHLX. Notwithstanding the FINRA RSA and the Intercompany RSA, PHLX retains ultimate legal responsibility for, and control of, functions performed for PHLX under such agreements.

Under the FINRA RSA, FINRA will conduct T+1 market surveillance and examine member organizations to monitor compliance with applicable PHLX and SEC rules. Moreover, many aspects of compliance with PSX rules, such as avoidance of locked and crossed markets and trade throughs, will be enforced by the System itself. PHLX will periodically test operations of PSX to determine that the System is operating in accordance with applicable rules.

PSX will operate out of the same New York metropolitan data center as the NASDAQ Market Center and the NASDAQ OMX BX Equities System, but will use equipment that is separate from the equipment used by those exchanges. In addition, PSX will have a backup data center in the Washington, DC metropolitan area. To ensure sufficient capacity with respect to the System, PHLX developed a baseline forecast of volume of usage, which will be updated regularly based on actual volumes. The System will use NASDAQ OMX's flexible INET technology, which is easily scalable to higher volumes through the addition of more equipment in the data center. The System will be protected from unauthorized access through the same robust firewall protections already in use at NASDAQ OMX's data centers.

As provided in proposed Rules 3401–3407, PSX will adopt rules implementing a version of the Order Audit Trail System ("OATS"). PHLX believes that as an affiliate of NASDAQ, it should ensure that its regulatory requirements are generally consistent with those of NASDAQ. Accordingly, PHLX member organizations that are also FINRA members must comply with the FINRA OATS rules requiring daily reporting of audit trail information for transactions in securities listed on NASDAQ. In addition, as provided in NASDAQ rules, PHLX member organizations that are not FINRA members must compile and maintain audit trail information for securities listed on NASDAQ, but are required to transmit this information to FINRA only if requested.[72] Similarly, if PHLX resumes operations as a listing market in the future, the rule will require all member organizations to maintain audit trail information for securities listed on PHLX, and to transmit the information to FINRA upon request, but would not require daily OATS reporting for such securities. As is true with respect to NASDAQ, OATS data will be used by PHLX for regulatory purposes only.[73]

Finally, PHLX is adopting rules addressing recommendations to customers (also known as suitability) and best execution and interpositioning, based on NASD Rules 2310 and 2320.[74] Member organizations would become subject to these rules by virtue of having public customers, and brokers with public customers are required to be members of FINRA; accordingly, adoption of these rules by PHLX could be seen as unnecessary. However, PHLX believes that the requirements of these rules are sufficiently important that they should be reinforced through explicit inclusion in the PHLX rulebook.

k. Affiliation With NASDAQ Execution Services, LLC

Although PSX will not route to other market centers, it will receive orders routed to it by other market centers, including NASDAQ. Nasdaq Execution Services, LLC ("NES") is the approved outbound routing facility of NASDAQ for cash equities. Rules 4751 and 4758

[68] 17 CFR 242.611(b)(1).

[69] 17 CFR 242.610(d).

[70] 17 CFR 242.600.

[71] As defined in SEC Rule 600, the term "quotation"includes an order.

[72] Proposed Rule 3405.

[73] *See* Securities Exchange Act Release No. 53128 (January 13, 2006); 71 FR 3350 (January 23, 2006) (File No. 10–131).

[74] Proposed Rules 763 and 764.

of NASDAQ establish the conditions under which NASDAQ is permitted to own and operate NES in its capacity as a facility of NASDAQ that routes orders from NASDAQ to other market centers. These conditions include requirements that: (1) NES is operated and regulated as a facility of NASDAQ; (2) NES will not engage in any business other than as an outbound router for NASDAQ and any other activities as approved by the Commission;[75] (3) the primary regulatory responsibility for NES lies with an unaffiliated self-regulatory organization; (4) use of NES for outbound routing is optional for other NASDAQ members; and (5) NASDAQ will not route orders to an affiliated exchange, such as PHLX, unless they check the NASDAQ book prior to routing.

In connection with PHLX's resumption of equity trading pursuant to this filing, NASDAQ will file a proposed rule change to modify the last of these conditions to allow it to route all forms of orders, including Directed Orders, to PSX during a twelve-month pilot period. Directed Orders are orders that route directly to other exchanges on an immediate-or-cancel basis without first checking the NASDAQ book for available liquidity. In order to appropriately address concerns previously raised by the Commission regarding the potential for conflicts of interest and informational advantages that may arise from the use of affiliated members to route orders between exchanges owned by a common parent, PHLX is proposing certain restrictions and undertakings.

In order to manage the concerns raised by the Commission regarding conflicts of interest in instances where a member firm is affiliated with an exchange to which it is routing orders, PHLX notes that, with respect to orders routed to PHLX by NES in its capacity as a facility of NASDAQ, NES is subject to independent oversight and enforcement by FINRA, an unaffiliated SRO that is NES's designated examining authority. In this capacity, FINRA is responsible for examining NES with respect to its books and records and capital obligations and also has the responsibility for reviewing NES's compliance with intermarket trading rules such as SEC Regulation NMS. In addition, under the FINRA RSA, FINRA staff will review NES's compliance with PHLX's rules through FINRA's examination program. FINRA and PHLX[76] will also monitor NES for compliance with PHLX's trading rules, subject, of course, to SEC oversight of the regulatory program of PHLX and FINRA. PHLX will, however, retain ultimate responsibility for enforcing its rules with respect to NES.

Furthermore, in order to minimize the potential for conflicts of interest, PHLX and FINRA will collect and maintain all alerts, complaints, investigations and enforcement actions in which NES (in its capacity as a facility of NASDAQ, routing orders to PSX) is identified as a participant that has potentially violated applicable SEC or PHLX rules. PHLX and FINRA will retain these records in an easily accessible manner in order to facilitate any potential review conducted by the SEC's Office of Compliance Inspections and Examinations. FINRA will then provide a report to the PHLX's CRO, on at least a quarterly basis, which (i) quantifies all alerts (of which PHLX and FINRA become aware) that identify NES as a participant that has potentially violated PHLX or SEC rules and (ii) quantifies the number of all investigations that identify NES as a participant that has potentially violated PHLX or SEC rules.[77]

In order to address the Commission's concerns about potential for information advantages that could place an affiliated member of an exchange at a competitive advantage vis-à-vis other non-affiliated members, PHLX is proposing Rule 985(c)(2). Rule 985(c)(2) will require the implementation of policies and procedures that are reasonably designed to prevent NES from acting on non-public information regarding PHLX systems prior to the time that such information is made available generally to all members of such entity performing inbound routing functions. These policies and procedures would include systems development protocols to facilitate an audit of the efficacy of these policies and procedures.

Specifically, new Rule 985(c)(2) shall provide as follows:

> The NASDAQ OMX Group, Inc., which owns NASDAQ Execution Services, LLC and the Exchange, shall establish and maintain procedures and internal controls reasonably designed to ensure that NASDAQ Execution Services, LLC does not develop or implement changes to its system on the basis of non-public information regarding planned changes to Exchange systems, obtained as a result of its affiliation with the Exchange, until such information is available generally to similarly situated members and member organizations of the Exchange in connection with the provision of inbound routing to the Exchange.

In addition, NASDAQ Rule 4758 provides that NES will establish and maintain procedures and internal controls reasonably designed to adequately restrict the flow of confidential and proprietary information between NASDAQ and its facilities (including the NES), and any other entity (including PHLX). The Exchange believes these measures will effectively address the concerns identified by the Commission regarding the potential for informational advantages favoring NES vis-à-vis other non-affiliated PHLX members.

2. *Statutory Basis*

The Exchange believes that the proposed rule change is consistent with the provisions of Section 6 of the Act,[78] in general, and with Section 6(b)(1) and (b)(5) of the Act,[79] in particular, in that the proposal enables the Exchange to be so organized as to have the capacity to be able to carry out the purposes of the Act and to comply with and enforce compliance by members, member organizations, and persons associated with members and member organizations with provisions of the Act, the rules and regulations thereunder, and the rules of the Exchange; and is designed to prevent fraudulent and manipulative acts and practices, to promote just and equitable principles of trade, to foster cooperation and coordination with persons engaged in regulating, clearing, settling, processing information with respect to, and facilitating transactions in securities, to remove impediments to and perfect the mechanism of a free and open market and a national market system, and, in general, to protect investors and the public interest. PSX will operate in accordance with the high standards that PHLX believes to be in evidence at all of NASDAQ OMX's exchanges, providing its Participants with opportunities to trade NMS stocks through a fair, open, and well-regulated market. Furthermore, PHLX believes that PSX's price-size allocation methodology will promote further development of the national market system by encouraging Participants to display liquidity, thereby contributing more fully to price discovery and

[75] Because only NASDAQ members may enter orders into NASDAQ, it also follows that routing by NES is conducted only with respect to orders of NASDAQ members.

[76] Personnel performing real-time oversight of equity trading on NASDAQ will also perform similar functions with respect to PSX. Such work is performed pursuant to the Intercompany RSA under the direction, authority, and oversight of PHLX's CRO and the ROC of its Board of Governors.

[77] PHLX, FINRA, and SEC staff may agree going forward to reduce the number of applicable or relevant surveillances that form the scope of the agreed upon report.

[78] 15 U.S.C. 78f.

[79] 15 U.S.C. 78f(b)(1), (5).

providing a counterbalance to increased use of dark trading venues.

B. Self-Regulatory Organization's Statement on Burden on Competition

PHLX does not believe that the proposed rule change will impose any burden on competition not necessary or appropriate in furtherance of the purposes of the Act. As a new entrant into the market for executions of NMS stocks, PSX will further enhance competition in this space.

C. Self-Regulatory Organization's Statement on Comments on the Proposed Rule Change Received From Members, Participants, or Others

Written comments were neither solicited nor received.

III. Date of Effectiveness of the Proposed Rule Change and Timing for Commission Action

Within 35 days of the date of publication of this notice in the **Federal Register** or within such longer period (1) as the Commission may designate up to 90 days of such date if it finds such longer period to be appropriate and publishes its reasons for so finding or (ii) as to which the self-regulatory organization consents, the Commission will:

A. By order approve such proposed rule change, or

B. Institute proceedings to determine whether the proposed rule change should be disapproved.

IV. Solicitation of Comments

Interested persons are invited to submit written data, views and arguments concerning the foregoing, including whether the proposal is consistent with the Act. Comments may be submitted by any of the following methods:

Electronic Comments

- Use the Commission's Internet comment form (*http://www.sec.gov/rules/sro.shtml*); or
- Send an e-mail to *rule-comments@sec.gov.* Please include File No. SR–Phlx–2010–79 on the subject line.

Paper Comments

- Send paper comments in triplicate to Elizabeth M. Murphy, Secretary, Securities and Exchange Commission, 100 F Street, NE., Washington, DC 20549–1090.

All submissions should refer to File No. SR–Phlx–2010–79. This file number should be included on the subject line if e-mail is used. To help the Commission process and review your comments more efficiently, please use only one method. The Commission will post all comments on the Commission's Internet Web site (*http://www.sec.gov/rules/sro.shtml*). Copies of the submission, all subsequent amendments, all written statements with respect to the proposed rule change that are filed with the Commission, and all written communications relating to the proposed rule change between the Commission and any person, other than those that may be withheld from the public in accordance with the provisions of 5 U.S.C. 552, will be available for Web site viewing and printing in the Commission's Public Reference Room, 100 F Street, NE., Washington, DC 20549, on official business days between the hours of 10 a.m. and 3 p.m. Copies of such filing will also be available for inspection and copying at the principal office of the Exchange. All comments received will be posted without change; the Commission does not edit personal identifying information from submissions. You should submit only information that you wish to make available publicly. All submissions should refer to File No. SR–Phlx–2010–79 and should be submitted on or before August 16, 2010.

For the Commission, by the Division of Trading and Markets, pursuant to delegated authority.[80]

Florence E. Harmon,

Deputy Secretary.

[FR Doc. 2010–18159 Filed 7–23–10; 8:45 am]

BILLING CODE 8010–01–P

SECURITIES AND EXCHANGE COMMISSION

[Release No. 34–62527; File No. SR–NYSEArca–2010–44]

Self-Regulatory Organizations; NYSE Arca, Inc.; Order Granting Approval of Proposed Rule Change Relating to the United States Commodity Index Fund

July 19, 2010.

I. Introduction

On May 25, 2010, NYSE Arca, Inc. ("NYSE Arca" or "Exchange") filed with the Securities and Exchange Commission ("Commission"), pursuant to Section 19(b)(1) of the Securities Exchange Act of 1934 ("Act")[1] and Rule 19b–4 thereunder,[2] a proposed rule change to to list and trade shares of the United States Commodity Index Fund under NYSE Arca Equities Rule 8.200, Commentary .02. The proposed rule change was published for comment in the **Federal Register** on June 15, 2010.[3] The Commission received no comments on the proposal. This order grants approval of the proposed rule change.

II. Description of the Proposal

The Exchange proposes to list and trade shares ("Units") of the United States Commodity Index Fund ("USCI" or "Fund") pursuant to Commentary .02 to NYSE Arca Equities Rule 8.200.[4] The Fund is a commodity pool that is a series of United States Commodity Index Funds Trust ("Trust"), a Delaware statutory trust.[5] The investment objective of USCI is to have the daily changes in percentage terms of the Units' net asset value ("NAV") reflect the daily changes in percentage terms of the SummerHaven Dynamic Commodity Index Total Return ("Index"),[6] less USCI's expenses. The Index, which is designed to reflect the performance of a diversified group of commodities, is owned and maintained by SummerHaven Index Management, LLC ("SummerHaven Indexing") and calculated and published by Bloomberg, L.P. ("Bloomberg"). United States Commodity Funds LLC ("USCF" or "Sponsor") is the sponsor of the Trust.[7]

[80] 17 CFR 200.30–3(a)(12).

[1] 15 U.S.C. 78s(b)(1).

[2] 17 CFR 240.19b–4.

[3] *See* Securities Exchange Act Release No. 62237 (June 7, 2010), 75 FR 33861 ("Notice").

[4] Commentary .02 to NYSE Arca Equi ties Rule 8.200 applies to the listing and trading, or trading pursuant to unlisted trading privileges, of Trust Issued Receipts that invest in "Financial Instruments." The term "Financial Instruments" is defined in Commentary .02(b)(4) to NYSE Arca Equities Rule 8.200 as any combination of investments, including cash; securities; options on securities and indices; futures contracts; options on futures contracts; forward contracts; equity caps, collars and floors; and swap agreements.

[5] The Fund has filed Amendment No. 3 to Form S–1, dated May 25, 2010 (File No. 333–164024) ("Registration Statement").

[6] The Index is designed to reflect the performance of a fully margined or collateralized portfolio of 14 commodity futures contracts with equal weights, selected each month from a universe of 27 eligible commodity futures contracts. The Index is composed of physical, non-financial commodity futures contracts with active and liquid markets traded upon futures exchanges in major industrialized countries. The futures contracts are denominated in U.S. dollars and weighted equally by notional amount. The commodity sectors for the Index include grains (*e.g.,* wheat, corn, soybeans, etc.), precious metals (*e.g.,* gold, silver, platinum), industrial metals (*e.g.,* zinc, nickel, aluminum, copper, *etc.*), livestock (*e.g.,* live cattle, lean hogs, feeder cattle), softs (*e.g.,* sugar, cotton, coffee, cocoa) and energy (*e.g.,* crude oil, natural gas, heating oil, *etc.*). The eligible commodities and relevant futures exchanges on which the futures contract are listed are identified and discussed in the Registration Statement, along with a specific discussion of position limits for these contracts.

[7] The Sponsor is a Delaware limited liability company that is registered as a commodity pool operator with the Commodity Futures Trading

USCI's trading advisor, SummerHaven Investment Management, LLC ("SummerHaven"),[8] provides advisory services to the Sponsor with respect to the Index and the investment decisions of USCI. The Sponsor, SummerHaven Indexing, SummerHaven, and Bloomberg are not affiliated with a broker-dealer and are subject to procedures designed to prevent the use and dissemination of material, non-public information regarding the Index or the Fund's portfolio.[9]

It is anticipated that the net assets of USCI will consist primarily of investments in futures contracts (such futures contracts, collectively, "Futures Contracts") for commodities that are traded on the New York Mercantile Exchange ("NYMEX"), ICE Futures ("ICE"), Chicago Board of Trade ("CBOT"), Chicago Mercantile Exchange ("CME"), London Metal Exchange ("LME"), Commodity Exchange, Inc. ("COMEX"), or on other foreign exchanges (such exchanges, collectively, "Futures Exchanges") and, to a lesser extent, in order to comply with regulatory requirements or in view of market conditions, other commodity-based contracts and instruments such as cash-settled options on Futures Contracts, forward contracts relating to commodities, cleared swap contracts, and other over-the-counter transactions that are based on the price of commodities and Futures Contracts (collectively, "Other Commodity-Related Investments," and together with Futures Contracts, collectively, "Commodity Interests"). Market conditions that the Sponsor currently anticipates could cause USCI to invest in Other Commodity-Related Investments would be those allowing USCI to obtain greater liquidity or to execute transactions with more favorable pricing. The Sponsor expects to manage USCI's investments directly, using the trading advisory services of SummerHaven for guidance with respect to the Index and USCF's selection of investments on behalf of USCI.

USCI seeks to achieve its investment objective by investing in Futures Contracts and Other Commodity-Related Investments such that daily changes in USCI's NAV will closely track the changes in the Index.[10] The Index is comprised of 14 Futures Contracts that will be selected on a monthly basis from a list of 27 possible Futures Contracts. The Futures Contracts that at any given time make up the Index are referred to herein as "Benchmark Component Futures Contracts." USCI anticipates that to meet its investment objective, it will invest first in the current Benchmark Component Futures Contracts and other Futures Contracts intended to replicate the return on the current Benchmark Component Futures Contracts and, thereafter, to comply with regulatory requirements or in view of market conditions, in Other Commodity-Related Investments intended to replicate the return on the Benchmark Component Futures Contracts, including cleared swap contracts, other over-the-counter transactions, and in other Futures Contracts.

USCI's positions in Commodity Interests will be rebalanced on a monthly basis in order to track the changing nature of the Index. If Futures Contracts relating to a particular commodity remains in the Index from one month to the next, such Futures Contracts will be rebalanced to the 7.14% target weight, as described below. Specifically, on a specified day near the end of each month called the "Selection Date," it will be determined if a current Benchmark Component Futures Contract will be replaced by a new Futures Contract in either the same or different underlying commodity to be used as a Benchmark Component Futures Contract for the following month, in which case USCI's investments would have to be changed accordingly. In order that USCI's trading does not unduly cause extraordinary market movements, and to make it more difficult for third parties to profit by trading based on market movements that could be expected from changes in the Benchmark Component Futures Contracts, USCI's investments typically will not be rebalanced entirely on a single day, but rather will typically be rebalanced over a period of four days. After fulfilling the margin and collateral requirements with respect to its Commodity Interests, USCI will invest the remainder of its proceeds from the sale of baskets in short-term obligations of the United States government ("Treasury Securities") or cash equivalents, and/or hold such assets in cash (generally in interest-bearing accounts).

The Sponsor endeavors to place USCI's trades in Commodity Interests and otherwise manage USCI's investments so that A will be within plus/minus 10 percent of B, where A is the average daily change in USCI's NAV for any period of 30 successive valuation days, *i.e.,* any NYSE Arca trading day as of which USCI calculates its NAV, and B is the average daily change in the Index over the same period.

The Sponsor will employ a "neutral" investment strategy intended to track the changes in the Index regardless of whether the Index goes up or goes down. The Sponsor does not intend to operate USCI in a fashion such that its per-Unit NAV will equal, in dollar terms, the spot prices of the commodities comprising the Index or the prices of any particular group of Futures Contracts.

The principal types of Commodity Interests in which USCI may invest are set forth in the Registration Statement and include futures contracts, forward contracts, swaps or options on futures contracts, forward contracts or commodities on the spot market. USCI will invest in Commodity Interests to the fullest extent possible without being leveraged or unable to satisfy its current or potential margin or collateral obligations with respect to its investments in Commodity Interests. The primary focus of the Sponsor is the investment in Commodity Interests and the management of USCI's investments in Treasury Securities, cash, and/or cash equivalents.

The specific Commodity Interests purchased will depend on various factors, including a judgment by the Sponsor as to the appropriate diversification of USCI's investments. While the Sponsor anticipates significant investments in Futures Contracts on the Futures Exchanges, for various reasons, including the ability to enter into the precise amount of exposure to the commodities market and position limits on Futures Contracts, it may also invest in Other Commodity-Related Investments, such as swaps, in the over-the-counter market. If USCI is required by law or regulation, or by one of its regulators, including a Futures Exchange, to reduce its position in one or more Futures Contracts to the applicable position limit or to a specified accountability level, a substantial portion of USCI's assets could be invested in Other Commodity-Related Investments that

Commission ("CFTC") and a member of the National Futures Association ("NFA"). The Sponsor controls the operations of USCI.

[8] Summerhaven is a Delaware limited liability company that is registered as a commodity trading advisor and a commodity pool operator with the CFTC and is a member of the NFA.

[9] In the event the Sponsor, SummerHaven Indexing, SummerHaven, or Bloomberg become affiliated with a broker-dealer, they will be required to implement a fire wall with respect to such broker-dealer regarding access to information concerning the composition and/or changes to the Index or portfolio. E-mail from Michael Cavalier, Chief, Counsel, NYSE Euronext, to Steve Varholik, Special Counsel, Division of Trading and Markets, Commission, dated July 13, 2010.

[10] Futures Contracts may have various expiration dates.

are intended to replicate the return on the Index or particular Benchmark Component Futures Contracts. As USCI's assets reach higher levels, USCI is more likely to exceed position limits, accountability levels or other regulatory limits and, as a result, it is more likely that it will invest in Other Commodity-Related Investments at such higher levels.

The Sponsor may not be able to fully invest USCI's assets in Futures Contracts having an aggregate notional amount exactly equal to USCI's NAV. For example, as standardized contracts, the Benchmark Component Futures Contracts included in the Index are for a specified amount of a particular commodity, and USCI's NAV and the proceeds from the sale of a Creation Basket is unlikely to be an exact multiple of the amounts of those contracts. As a result, in such circumstances, USCI may be better able to achieve the exact amount of exposure to changes in price of the Benchmark Component Futures Contracts through the use of Other Commodity-Related Investments, such as over-the-counter contracts that have better correlation with changes in price of the Benchmark Component Futures Contracts. USCI anticipates that, to the extent it invests in Futures Contracts other than the Benchmark Component Futures Contracts and Other Commodity-Related Investments, it will enter into various non-exchange-traded derivative contracts to hedge the short-term price movements of such Futures Contracts and Other Commodity-Related Investments against the current Benchmark Component Futures Contracts.

The Exchange represents that the Fund will meet the initial and continued listing requirements applicable to Trust Issued Receipts in NYSE Arca Equities Rule 8.200 and Commentary .02 thereto. With respect to the application of Rule 10A–3 under the Act,[11] the Trust relies on the exception contained in Rule 10A–3(c)(7).[12] A minimum of 100,000 Units will be outstanding as of the start of trading on the Exchange.

Additional details regarding the Trust; trading and investment policies of the Fund, including the Fund's rebalancing of positions in Commodity Interests; creations and redemptions of the Units; information relating to the Index and Index methodology; information relating to Futures Contracts, Futures Exchanges, hours of trading on the Futures Exchanges, and position limits; investment risks; NAV calculation; dissemination of certain key values; availability of information about the Units; and information relating to trading halts, applicable Exchange trading rules, surveillance, and the Information Bulletin, among other things, can be found in the Notice and/or the Registration Statement, as applicable.[13]

III. Discussion and Commission's Findings

The Commission has carefully reviewed the proposed rule change and finds that it is consistent with the requirements of Section 6 of the Act[14] and the rules and regulations thereunder applicable to a national securities exchange.[15] In particular, the Commission finds that the proposal is consistent with Section 6(b)(5) of the Act,[16] which requires, among other things, that the Exchange's rules be designed to prevent fraudulent and manipulative acts and practices, to promote just and equitable principles of trade, to foster cooperation and coordination with persons engaged in facilitating transactions in securities, and to remove impediments to and perfect the mechanism of a free and open market and a national market system.

The Commission finds that the proposal to list and trade Units on the Exchange also is consistent with Section 11(a)(1)(C)(iii) of the Act,[17] which sets forth Congress' finding that it is in the public interest and appropriate for the protection of investors to assure the availability to brokers, dealers, and investors of information with respect to quotations for and transactions in securities. Quotation and last-sale information regarding the Units will be disseminated through the facilities of the Consolidated Tape Association. In addition, values of the Index are computed by Bloomberg and disseminated approximately every 15 seconds from 8 a.m. to 5 p.m. Eastern Time ("E.T."). An Indicative Trust Value ("ITV"), which will be calculated by using the prior day's closing NAV per Unit of the Fund as a base and updated throughout the NYSE Arca Core Trading Session of 9:30 a.m. to 4 p.m. E.T. each trading day to reflect current changes in the value of the Futures Contracts, will be disseminated on a per-Unit basis by one or more major market data vendors every 15 seconds during the Core Trading Session.[18] The Fund will provide Web site disclosure of portfolio holdings daily and will include, as applicable, the names and value (in U.S. dollars) of Financial Instruments and characteristics of such instruments and cash equivalents, and amount of cash held in the portfolio of the Fund. The closing prices and settlement prices of the Futures Contracts are also available from the Web sites of the applicable futures exchanges, automated quotation systems, published or other public sources, or on-line information services such as Bloomberg or Reuters. The relevant futures exchanges also provide delayed futures information on current and past trading sessions and market news free of charge on their respective Web sites. The specific contract specifications for the Futures Contracts are also available on such Web sites, as well as other financial informational sources. Also, the Fund's Web site will display the end-of-day closing index levels and NAV. The NAV for the Fund will be calculated by the Administrator once a day and will be disseminated daily to all market participants at the same time. The Exchange will make available on its Web site daily trading volume of each of the Units, closing prices of such Units, and number of Units outstanding.

The Commission further believes that the proposal to list and trade the Units is reasonably designed to promote fair disclosure of information that may be necessary to price the Units appropriately and to prevent trading when a reasonable degree of transparency cannot be assured. If the Exchange becomes aware that the NAV is not being disseminated to all market participants at the same time, it will halt trading until such time as the NAV is available to all market participants. Further, the Exchange may halt trading during the day in which the interruption to the dissemination of the Index value, ITV, or the value of the underlying Futures Contracts occurs. If the interruption to the dissemination of the Index value, ITV, or the value of the underlying Futures Contracts persists past the trading day in which it occurred, the Exchange will halt trading no later than the beginning of the trading day following the interruption. In addition, the Web site disclosure of

[11] 17 CFR 240.10A–3.

[12] 17 CFR 240.10A–3(c)(7).

[13] *See supra* notes 3 and 5.

[14] 15 U.S.C. 78f.

[15] In approving this proposed rule change, the Commission has considered the proposed rule's impact on efficiency, competition, and capital formation. *See* 15 U.S.C. 78c(f).

[16] 15 U.S.C. 78f(b)(5).

[17] 15 U.S.C. 78k–1(a)(1)(C)(iii).

[18] While the ITV will be updated during the NYSE Arca Core Trading Session when Futures Exchanges are trading any Futures Contracts held by the Fund, a static ITV will be disseminated between the close of trading of all applicable Futures Contracts on Futures Exchanges and the close of the NYSE Arca Core Trading Session.

the portfolio composition of the Fund will occur at the same time as the disclosure by the Sponsor of the portfolio composition to Authorized Purchasers so that all market participants are provided portfolio composition information at the same time. Therefore, the same portfolio information will be provided on the public Web site, as well as in electronic files provided to Authorized Purchasers. Accordingly, each investor will have access to the current portfolio composition of the Fund through the Fund's Web site. Lastly, the trading of Units will be subject to NYSE Arca Equities Rule 8.200, Commentary .02(e), which sets forth certain restrictions on ETP Holders [19] acting as registered Market Makers [20] in Trust Issued Receipts to facilitate surveillance.

The Exhange has represented that Units are deemed equity securities subject to the Exchange's rules governing the trading of equity securities. In support of this proposal, the Exchange has made representations, including the following:

(1) The Fund will meet the initial and continued listing requirements applicable to Trust Issued Receipts in NYSE Arca Equities Rule 8.200 and Commentary .02 thereto.

(2) The Exchange has appropriate rules to facilitate transactions in the Units during all trading sessions.

(3) The Exchange's surveillance procedures are adequate to properly monitor Exchange trading of the Units in all trading sessions and to deter and detect violations of Exchange rules and applicable Federal securities laws. The Exchange is able to obtain information regarding trading in the Units, the physical commodities included in, or options, futures, or options on futures on, Units through ETP Holders, in connection with such ETP Holders' proprietary or customer trades which they effect on any relevant market. The Exchange currently has in place an Information Sharing Agreement with the ICE and LME for the purpose of providing information in connection with trading in or related to Futures Contracts traded on their respective exchanges. The Exchange can obtain market surveillance information, including customer identity information, with respect to transactions occurring on the exchanges that are members of the Intermarket Surveillance Group ("ISG"), including CME, CBOT, COMEX, and NYMEX. A list of ISG members is available at *http://www.isgportal.org.*[21]

(4) With respect to Fund assets traded on exchanges, not more than 10% of the weight of such assets in the aggregate shall consist of components whose principal trading market is not a member of ISG or is a market with which the Exchange does not have a comprehensive surveillance sharing agreement.

(5) Prior to the commencement of trading, the Exchange will inform its ETP Holders in an Information Bulletin of the special characteristics and risks associated with trading the Units. Specifically, the Information Bulletin will discuss the following: (a) The risks involved in trading the Units during the Opening and Late Trading Sessions when an updated ITV will not be calculated or publicly disseminated; (b) the procedures for purchases and redemptions of Units in Creation Baskets and Redemption Baskets (and that Units are not individually redeemable); (c) NYSE Arca Equities Rule 9.2(a), which imposes a duty of due diligence on its ETP Holders to learn the essential facts relating to every customer prior to trading the Units; (d) how information regarding the ITV is disseminated; (e) the requirement that ETP Holders deliver a prospectus to investors purchasing newly issued Units prior to or concurrently with the confirmation of a transaction; and (f) trading information.

(6) A minimum of 100,000 Units will be outstanding as of the start of trading on the Exchange.

(7) With respect to the application of Rule 10A–3 under the Act, the Trust will rely on the exception contained in Rule 10A–3(c)(7).[22]

This approval order is based on the Exchange's representations.[23]

For the foregoing reasons, the Commission finds that the proposed rule change is consistent with the Act and the rules and regulations thereunder applicable to a national securities exchange.

[19] *See* NYSE Arca Equities Rule 1.1(n) (defining ETP Holder).

[20] *See* NYSE Arca Equities Rule 1.1(u) (defining Market Maker).

[21] The Exchange notes that not all Commodity Interests may trade on markets that are members of ISG or with which the Exchange has in place a comprehensive surveillance sharing agreement.

[22] *See supra* notes 11 and 12 and accompanying text.

[23] The Commission notes that it does not regulate the market for futures in which the Fund plans to take positions, which is the responsibility of the CFTC. The CFTC has the authority to set limits on the positions that any person may take in futures on commodities. These limits may be directly set by the CFTC, or by the markets on which the futures are traded. The Commission has no role in establishing position limits on futures in commodities, even though such limits could impact a commodity-based exchange-traded product that is under the jurisdiction of the Commission.

IV. Conclusion

It is therefore ordered, pursuant to Section 19(b)(2) of the Act,[24] that the proposed rule change (SR–NYSEArca–2010–44) be, and it hereby is, approved.

For the Commission, by the Division of Trading and Markets, pursuant to delegated authority.[25]

Florence E. Harmon,

Deputy Secretary.

[FR Doc. 2010–18160 Filed 7–23–10; 8:45 am]

BILLING CODE 8010–01–P

[24] 15 U.S.C. 78s(b)(2).

[25] 17 CFR 200.30–3(a)(12).

SOCIAL SECURITY ADMINISTRATION

Agency Information Collection Activities: Emergency Request

The Social Security Administration (SSA) publishes a list of information collection packages requiring clearance by the Office of Management and Budget (OMB) in compliance with Public Law (Pub. L.) 104–13, the Paperwork Reduction Act of 1995, effective October 1, 1995. This notice includes a new information collection request for which we are requesting emergency OMB clearance.

SSA is soliciting comments on the accuracy of the agency's burden estimate; the need for the information; its practical utility; ways to enhance its quality, utility, and clarity; and ways to minimize burden on respondents, including the use of automated collection techniques or other forms of information technology. Mail, e-mail, or fax your comments and recommendations on the information collection to the OMB Desk Officer and the SSA Reports Clearance Officer to the following addresses or fax numbers.

(OMB) Office of Management and Budget, Attn: Desk Officer for SSA, Fax: 202–395–6974, E-mail address: *OIRA_Submission@omb.eop.gov.*

(SSA) Social Security Administration, DCBFM, Attn: Reports Clearance Officer, 1340 Annex Building, 6401 Security Blvd., Baltimore, MD 21235, Fax: 410–965–8783. E-mail address: *OPLM.RCO@ssa.gov.*

SSA submitted the information collection below to OMB for Emergency Clearance. SSA is requesting Emergency Clearance from OMB no later than August 2, 2010. Individuals can obtain copies of the collection instrument by calling the SSA Reports Clearance Officer or by writing to the above e-mail address.

Economic Recovery Payments Issued to Estates of Deceased Social Security Beneficiaries and Supplemental Security Income Recipients—0960—NEW

Background

The American Recovery and Reinvestment Act of 2009 (ARRA), Public Law 111–5, directs SSA to make one-time $250 Economic Recovery Payments (ERP) to certain Social Security beneficiaries and Supplemental Security Income (SSI) recipients. In some instances, the ERP was returned to SSA or not deposited due to the death of an appropriately certified ERP beneficiary or SSI recipient. SSA has received requests from the estates, or the deceased's estate representative, asking SSA to reissue the ERP to the deceased's estate. The ARRA has no provision discussing payment of ERPs to estates. However, SSA's Office of the General Counsel (OGC) has decided the ARRA provides a right to receive an ERP at the time of certification, and this right does not terminate with the recipient's death.

Information Collection

Because of the legal considerations discussed above, if a Social Security beneficiary or SSI recipient died before financially transacting the ERP, and the estate representatives of these beneficiaries/recipients approaches the agency and can provide the required information, SSA will provide the ERP reimbursement to the estate representatives.

Because we anticipate a small pool of respondents and are asking only a few questions, we are not creating a form for this collection; rather, we will ask the required information when estate representatives come to a field office or call a field office on the phone. Once the representative provides the required information, SSA's OGC will verify, under the applicable state or territorial law, if the requesting individual meets the requirements necessary to receive the ERP. We will then provide the reimbursement to these estate representatives, who are the respondents for this information collection.

Type of Request: Emergency clearance of a new information collection.

Number of Respondents: 1,000.

Frequency of Response: 1.

Average Burden per Response: 20 minutes.

Estimated Annual Burden: 333 hours.

Dated: July 21, 2010.

Faye Lipsky,

Reports Clearance Officer, Social Security Administration.

[FR Doc. 2010–18214 Filed 7–23–10; 8:45 am]

BILLING CODE 4191–02–P

DEPARTMENT OF TRANSPORTATION

Federal Railroad Administration

Notice of Application for Approval of Discontinuance or Modification of a Railroad Signal System

Pursuant to Title 49 Code of Federal Regulations (CFR) Part 235 and 49 U.S.C. 20502(a), the following railroad has petitioned the Federal Railroad Administration (FRA), seeking approval for the discontinuance or modification of the signal system or relief from the requirements of 49 CFR Part 236, as detailed below.

Docket Number FRA–2010–0119

Applicant: CSX Transportation, Inc., Mr. Joseph S. Ivanyo, Chief Engineer, Communications and Signals, 500 Water Street, SC J–350, Jacksonville, Florida 32202.

CSX Transportation, Inc. (CSX) seeks approval of the proposed modification of the traffic control system at Mileposts OWA 63.8 and OWA 63.0 on the W&A Subdivision, Atlanta Division, at Adairsville, Georgia. The modification consists of the removal of Control Points North Halls and South Halls, including the removal of the power-operated switch, switch frog, and turnout, and signals 26LA, 26LC, and 26R, at South Halls (Milepost OWA 63.0); and the conversion of the power-operated switch to a hand-throw switch, and removal of signals 28LA, 28RA, and 28RC, at North Halls (Milepost OWA 63.8). Intermediate Signals 631 and 630 will be installed at Milepost 63.0.

The reason given for the proposed change is that the existing siding is no longer needed for current operations.

Any interested party desiring to protest the granting of an application shall set forth, specifically, the grounds upon which the protest is made, and include a concise statement of the interest of the party in the proceeding. Additionally, one copy of the protest shall be furnished to the applicant at the address listed above.

FRA expects to be able to determine these matters without an oral hearing. However, if a specific request for an oral hearing is accompanied by a showing that the party is unable to adequately present his or her position by written statements, an application may be set for public hearing.

All communications concerning this proceeding should be identified by Docket Number FRA–2010–0119, and may be submitted by one of the following methods:

- *Web site: http://www.regulations.gov.* Follow the instructions for submitting comments on the DOT electronic site;
- *Fax:* 202–493–2251;
- *Mail:* Docket Management Facility, U.S. Department of Transportation, 1200 New Jersey Avenue, SE., West Building Ground Floor, Room W12–140, Washington, DC 20590; or
- *Hand Delivery:* Room W12–140 of the U.S. Department of Transportation, West Building Ground Floor, 1200 New Jersey Avenue, SE., Washington, DC, between 9 a.m. and 5 p.m., Monday through Friday, except Federal holidays.
- Communications received within 45 days of the date of this notice will be considered by FRA before final action is taken. Comments received after that date will be considered as far as practicable. All written communications concerning these proceedings are available for examination during regular business hours (9 a.m.–5 p.m.) at the above facility. All documents in the public docket are also available for inspection and copying on the Internet at the docket facility's Web site at *http://www.regulations.gov.*

FRA wishes to inform all potential commenters that anyone is able to search the electronic form of all comments received into any of our dockets by the name of the individual submitting the comment (or signing the comment, if submitted on behalf of an association, business, labor union, etc.). You may review DOT's complete Privacy Act Statement in the **Federal Register** published on April 11, 2000 (65 FR 19477) or at *http://www.dot.gov/privacy.html.*

Issued in Washington, DC, on July 20, 2010.

Robert C. Lauby,

Deputy Associate Administrator for Regulatory and Legislative Operations.

[FR Doc. 2010–18237 Filed 7–23–10; 8:45 am]

BILLING CODE 4910–06–P

DEPARTMENT OF TRANSPORTATION

Surface Transportation Board

[Docket No. FD 35141]

U S Rail Corporation—Construction and Operation Exemption—Brookhaven Rail Terminal

On August 7, 2008, U S Rail Corporation (U S Rail), an existing class III short line common carrier in Toledo, OH, filed a petition for exemption with the Surface Transportation Board (Board) under 49 U.S.C. 10502 seeking authority to construct and operate approximately 18,000 feet (3.4 miles) of new rail line at a 28-acre site (the Brookhaven Rail Terminal or BRT) located in the Town of Brookhaven, Suffolk County, NY. In addition to the construction and operation of the approximately 18,000 feet of rail line, U S Rail also proposes to construct various facilities on the BRT site. These facilities include a rail switch (which would allow the new rail line to connect with the existing Long Island Rail Road (LIRR mainline), 200 feet of lead track, and crushed stone aggregate (aggregate) handling and storage facilities consisting of an aggregate storage area, an intermodal freight storage area, and a transload area with truck scales.

The proposed rail line would allow U S Rail to provide an efficient means for delivering aggregate via rail from sources in upper New York State to its primary customer, the Sills Group, located on Long Island, NY. If approved, the project would reduce the Sills Group's reliance on truck transport of aggregate through the New York City metropolitan region and allow Sills Group to deliver up to 500,000 tons of aggregate annually for use in road and building construction on Long Island. The Sills Group would use 250,000 tons of the aggregate for its construction facilities on Long Island (the Scatt Materials plant and the Empire Asphalt plant) and would make the remaining 250,000 tons of aggregate available to currently unidentified customers.

Rail operations would consist of an average of six trains per week; three inbound trains, each consisting of approximately 40 to 50 railcars of aggregate delivered to the BRT, and three outbound trains per week consisting of 40 to 50 empty railcars. New York & Atlantic Railway would deliver the aggregate to the BRT over the LIRR, which would hand the rail cars to U S Rail for rail movements on the BRT site.

SEA is seeking public review and comment during a 15-day comment period, which is shorter than the time SEA usually affords for review and comment of its Environmental Assessments. SEA believes that 15 days for review and comment is appropriate here because the Town of Brookhaven's Division of Environmental Protection has already conducted an environmental review of the BRT site, the site is an industrial area and is already highly disturbed, and the Town of Brookhaven and U S Rail have entered into a Stipulation of Settlement regarding this proposal. Please send comments on this Draft EA postmarked no later than August 10, 2010 to: Troy Brady, Environmental Protection Specialist, Surface Transportation Board, Section of Environmental Analysis, Suite 1100, 395 E Street, SW., Washington, DC 20423–0001, *Attn:* Docket No. 35141.

Comments may be file electronically on the Board's website, *http://www.stb.dot.gov* by clicking on the "E-Filing" link. Please refer to Finance Docket No. 35141 in correspondence, including e-filing, addressed to the Board. If you have questions regarding this Draft EA, please contact Troy Brady by phone at (202) 245–0301, by fax at (202) 245–0454, or by e-mail at *troy.brady@stb.dot.gov.*

Decided: July 21, 2010.

By the Board, Victoria Rutson, Chief, Section of Environmental Analysis.

Jeffrey Herzig,

Clearance Clerk.

[FR Doc. 2010–18243 Filed 7–23–10; 8:45 am]

BILLING CODE 4915–01–P

DEPARTMENT OF TRANSPORTATION

Federal Highway Administration

Notice of Final Federal Agency Actions on Proposed Highway in Washington

AGENCY: Federal Highway Administration (FHWA), DOT.

ACTION: Notice of limitation on claims for judicial review of actions by FHWA.

SUMMARY: This notice announces actions taken by FHWA that are final within the meaning of 23 U.S.C. 139(l)(1). The actions relate to a proposed highway project, the SR 502 Corridor Widening Project, in the State of Washington. Those actions grant approval for the project. The project will widen the existing two-lane roadway to four travel lanes with a median for a 5-mile segment of SR 502 between NE 15th Avenue and NE 102nd Avenue in Clark County, Washington. Specific actions include acquiring additional right-of-way, signalizing three intersections, upgrading one existing signalized intersection, constructing new travel lanes, constructing a median with a median treatment, constructing pedestrian and bicycle facilities, replacing four culverts, removing and placing fill, removing vegetation, and providing stormwater treatment for both new impervious surfaces and some existing surfaces. The project also includes extensive mitigation and restoration actions which are compatible with land use plans.

DATES: By this notice, FHWA is advising the public of final agency actions subject to 23 U.S.C. 139(l)(1). A claim seeking judicial review of the Federal agency actions on the highway project will be barred unless the claim is filed within 180 days of publication of this **Federal Register** notice. If the Federal law that authorizes judicial review of a claim provides a time period of less than 180 days for filing such claim, then that shorter time period still applies.

FOR FURTHER INFORMATION CONTACT: Yamilee Volcy, Area Engineer, Federal Highway Administration, 711 S. Capitol Way, Suite 501, Olympia, WA 98501; telephone: (360) 753–9552; and e-mail: *Yamilee.Volcy@dot.gov.* The FHWA Washington Division's Area Engineer's regular office hours are between 6 a.m. and 4 p.m. (Pacific Time). You may also contact Barbara Aberle, Project Environmental Manager, WSDOT Southwest Region Office, 11018 NE 51st Circle, Vancouver, WA 98682; telephone: (360) 905–2186; and e-mail: *AberleB@wa.wsdot.gov.* The WSDOT Southwest Region Office regular office hours are between 8 a.m. and 5 p.m. (Pacific Time).

SUPPLEMENTARY INFORMATION: Notice is hereby given that FHWA has taken final agency actions by issuing approval for the following highway project: SR 502 Corridor Widening Project. The purpose of the project is to improve safety and mobility along the SR 502 corridor between NE 15th Avenue and NE 102nd Avenue, and to improve regional connectivity between Battle Ground, north Clark County, and Interstate 5 (I–5). The project is located in Clark County, Washington. The actions by FHWA on this project, and the laws under which such actions were taken, are described in the March 2010 Final Environmental Impact Statement (EIS), June 2010 Record of Decision (ROD), and in other documents in the FHWA administrative record for the project. The EIS, ROD, and other documents in the FHWA administrative record are available by contacting FHWA or the Washington State Department of Transportation at the addresses provided above. The EIS and ROD can

be viewed and downloaded from the project Web site at *http://www.wsdot.wa.gov/Projects/SR502/Widening.* Copies are also available for review at the following locations: FHWA, WSDOT Southwest Region Office, Battle Ground Community Library, Fort Vancouver Regional Library, Ridgefield Community Library, Washington State University Vancouver Library, Woodland Community Library, Clark College Library—Cannell Library, Washington State Library, Battle Ground Chamber of Commerce, and Greater Vancouver Chamber of Commerce. This notice applies to all Federal agency decisions on the project as of the issuance date of this notice and all laws under which such actions were taken, including but not limited to:

1. *General:* National Environmental Policy Act (42 U.S.C. 4321- 43471); Federal-Aid Highway Act (23 U.S.C. 109).

2. *Air:* Clean Air Act, as amended (42 U.S.C. 7401–7671(q)).

3. *Land:* Section 4(f) of the Department of Transportation Act of 1966 (49 U.S.C. 303); Farmland Protection Policy Act (7 U.S.C. 4201–4209).

4. *Wildlife:* Endangered Species Act (16 U.S.C. 1531–1544); Anadromous Fish Conservation Act (16 U.S.C. 757(a)–757(g)); Fish and Wildlife Coordination Act (16 U.S.C. 661–667(d)); Magnuson-Stevenson Fishery Conservation and Management Act of 1976, as amended (16 U.S.C. 1801 *et seq.*]); Migratory Bird Treaty Act (16 U.S.C. 703–712).

5. *Historic and Cultural Resources:* Section 106 of the National Historic Preservation Act of 1966, as amended (16 U.S.C. 470(f) *et seq.*); Archaeological Resources Protection Act of 1977 (16 U.S.C. 470(aa)–11); Archaeological and Historic Preservation Act (16 U.S.C. 469–469(c)); Native American Grave Protection and Repatriation Act (25 U.S.C. 3001–3013).

6. *Social and Economic:* Civil Rights Act of 1964 (42 U.S.C. 2000(d)–2000(d)(1)); American Indian Religious Freedom Act (42 U.S.C. 1996); the Uniform Relocation Assistance and Real Property Acquisition Policies Act of 1970, as amended (42 U.S.C. 61).

7. *Wetlands and Water Resources:* Clean Water Act, 33 U.S.C. 1251–1377 (section 404, section 401, section 319); Land and Water Conservation Fund (16 U.S.C. 4601–4604); Safe Drinking Water Act (42 U.S.C. 300(f)–300(j)(6)); TEA–21 Wetlands Mitigation (23 U.S.C. 103(b)(6)(m), 133(b)(11)); Flood Disaster Protection Act (42 U.S.C. 4001–4128).

8. *Hazardous Materials:* Comprehensive Environmental Response, Compensation, and Liability Act (42 U.S.C. 9601–9675); Superfund Amendments and Reauthorization Act of 1986 (Pub. L. 99–499); Resource Conservation and Recovery Act (42 U.S.C. 6901–6992(k)).

9. *Executive Orders:* E.O. 11990 Protection of Wetlands; E.O. 11988 Floodplain Management; E.O. 12898, Federal Actions to Address Environmental Justice in Minority Populations and Low Income Populations; E.O. 11593 Protection and Enhancement of Cultural Resources; E.O. 13007 Indian Sacred Sites; E.O. 13287 Preserve America; E.O. 13175 Consultation and Coordination with Indian Tribal Governments; E.O. 11514 Protection and Enhancement of Environmental Quality; E.O. 13112 Invasive Species.

Final actions taken under: NEPA Final EIS issuance and Record of Decision by FHWA; Biological Opinion issued by the United States Department of Commerce National Oceanic and Atmospheric Administration—National Marine Fisheries Service on January 14, 2010.

FHWA NEPA documents: Final EIS (March 2010) published April 2, 2010 and Record of Decision issued June 24, 2010. These documents are available for viewing on the WSDOT Web site, at the agency offices, or at the libraries and chambers of commerce listed above.

(Catalog of Federal Domestic Assistance Program Number 20.205, Highway Planning and Construction. The regulations implementing Executive Order 12372 regarding intergovernmental consultation on Federal programs and activities apply to this program.)

Authority: 23 U.S.C. 139(l)(1).

Issued on: July 20, 2010.

Daniel M. Mathis,

Division Administrator, Olympia, Washington.

[FR Doc. 2010–18178 Filed 7–23–10; 8:45 am]

BILLING CODE P

DEPARTMENT OF TRANSPORTATION

Pipeline and Hazardous Materials Safety Administration

[Docket No. PHMSA–2010–0042]

Pipeline Safety: Request for Special Permit

AGENCY: Pipeline and Hazardous Materials Safety Administration (PHMSA); DOT.

ACTION: Notice.

SUMMARY: Pursuant to the Federal Pipeline Safety Laws, PHMSA is publishing this notice of a special permit request we have received from Dominion Transmission, Inc., a natural gas pipeline operator, seeking relief from compliance with certain requirements in the Federal Pipeline Safety Regulations. This notice seeks public comments on this request, including comments on any safety or environmental impacts. At the conclusion of the 30-day comment period, PHMSA will evaluate the request and determine whether to grant or deny a special permit.

DATES: Submit any comments regarding this special permit request by August 25, 2010.

ADDRESSES: Comments should reference the docket number for this specific special permit request and may be submitted in the following ways:

- *E-Gov Web Site: http://www.Regulations.gov.* This site allows the public to enter comments on any **Federal Register** notice issued by any agency.
- *Fax:* 1–202–493–2251.
- *Mail:* Docket Management System: U.S. Department of Transportation (DOT), Docket Operations, M–30, West Building Ground Floor, Room W12–140, 1200 New Jersey Avenue, SE., Washington, DC 20590.
- *Hand Delivery:* DOT Docket Management System: U.S. Department of Transportation, Docket Operations, M–30, West Building Ground Floor, Room W12–140, 1200 New Jersey Avenue, SE., Washington, DC 20590 between 9 a.m. and 5 p.m., Monday through Friday, except Federal holidays.

Instructions: You should identify the docket number for the special permit request you are commenting on at the beginning of your comments. If you submit your comments by mail, please submit two copies. To receive confirmation that PHMSA has received your comments, please include a self-addressed stamped postcard. Internet users may submit comments at *http://www.Regulations.gov.*

Note: Comments are posted without changes or edits to http://www.Regulations.gov, including any personal information provided. There is a privacy statement published on *http://www.Regulations.gov.*

FOR FURTHER INFORMATION CONTACT:

General: Dana Register by telephone at 202–366–0490; or, e-mail at *dana.register@dot.gov.*

Technical: Joshua Johnson by telephone at 816–329–3825; or, e-mail at *joshua.johnson@dot.gov.*

SUPPLEMENTARY INFORMATION: PHMSA has received this request for a special permit from Dominion Transmission Inc., seeking relief from compliance

with certain pipeline safety regulations. Dominion's request includes a technical analysis. This request can be found at Regulations.gov under docket number PHMSA–2010–0121. We invite interested persons to participate by reviewing this special permit request at *http://www.Regulations.gov*, and by submitting written comments, data or other views. Please include any comments on potential environmental impacts that may result if this special permit is granted.

Before acting on this special permit request, PHMSA will evaluate all comments received on or before the comments closing date. Comments will be evaluated after this date if it is possible to do so without incurring additional expense or delay. PHMSA will consider each relevant comment we receive in making our decision to grant or deny a request.

PHMSA has received the following special permit request:

Docket No.	Requester	Regulation	Nature of special permit
PHMSA–2010–0121	Dominion Transmission Incorporated (DTI).	49 CFR 192.611 ...	To authorize DTI to engage in an alternative approach to conduct risk control activities based on Integrity Management Program principles rather than lowering the MAOP or replacing the subject pipe segment. This application is for one segment of the DTI Line TL–465 in Prince William County, Virginia. This segment has changed from a Class 1 location to a Class 3 location due to an expanded housing development. The pipeline is 24-inches in diameter and has a MAOP of 1,250 psig. The segment that has changed Class Location is 3,478 feet in length and is located at MP 1085+81 ft. to MP 1,120+59 ft.

Authority: 49 U.S.C. 60118(c)(1) and 49 CFR 1.53.

Issued in Washington, DC, on July 16, 2010.

Linda Daugherty,

Deputy Associate Administrator for Policy and Programs.

[FR Doc. 2010–18238 Filed 7–23–10; 8:45 am]

BILLING CODE 4910–60–P

DEPARTMENT OF THE TREASURY

United States Mint

Notice of Meeting

ACTION: Notification of Citizens Coinage Advisory Committee July 27, 2010 public meeting.

SUMMARY: Pursuant to United States Code, Title 31, section 5135(b)(8)(C), the United States Mint announces the Citizens Coinage Advisory Committee (CCAC) public meeting scheduled for July 27, 2010.

Date: July 27, 2010 .

Time: 8:30 a.m. to 3 p.m.

Location: Sheraton Society Hill, One Dock Street (2nd & Walnut Streets), Philadelphia, PA 19106.

Subject: Review and discuss obverse and reverse candidate designs for the 2011 First Spouse Bullion Coin Program and obverse designs for the 2012 Presidential $1 Coin Program.

Interested persons should call 202–354–7502 for the latest update on meeting time and room location.

In accordance with 31 U.S.C. 5135, the CCAC:

- Advises the Secretary of the Treasury on any theme or design proposals relating to circulating coinage, bullion coinage, Congressional Gold Medals, and national and other medals.
- Advises the Secretary of the Treasury with regard to the events, persons, or places to be commemorated by the issuance of commemorative coins in each of the five calendar years succeeding the year in which a commemorative coin designation is made.
- Makes recommendations with respect to the mintage level for any commemorative coin recommended.

FOR FURTHER INFORMATION CONTACT: Cliff Northup, United States Mint Liaison to the CCAC; 801 9th Street, NW.; Washington, DC 20220; or call 202–354–7200.

Any member of the public interested in submitting matters for the CCAC's consideration is invited to submit them by fax to the following number: 202–756–6830.

Authority: 31 U.S.C. 5135(b)(8)(C).

Dated: July 19, 2010.

Edmund C. Moy,

Director, United States Mint.

[FR Doc. 2010–18194 Filed 7–23–10; 8:45 am]

BILLING CODE 4810–02–P



Federal Register

Monday,
July 26, 2010

Part II

Department of Education

34 CFR Part 668

Program Integrity: Gainful Employment; Proposed Rule

DEPARTMENT OF EDUCATION

34 CFR Part 668

RIN 1840–AD04

[Docket ID ED–2010–OPE–0012]

Program Integrity: Gainful Employment

AGENCY: Office of Postsecondary Education, Department of Education.

ACTION: Notice of proposed rulemaking.

SUMMARY: The Secretary proposes to amend the Student Assistance General Provisions to establish measures for determining whether certain postsecondary educational programs lead to gainful employment in recognized occupations, and the conditions under which these educational programs remain eligible for the student financial assistance programs authorized under title IV of the Higher Education Act of 1965, as amended (HEA).

DATES: We must receive your comments on or before September 9, 2010.

ADDRESSES: Submit your comments through the Federal eRulemaking Portal or via postal mail, commercial delivery, or hand delivery. We will not accept comments by fax or by e-mail. Please submit your comments only one time, in order to ensure that we do not receive duplicate copies. In addition, please include the Docket ID at the top of your comments.

- *Federal eRulemaking Portal.* Go to *http://www.regulations.gov* to submit your comments electronically. Information on using Regulations.gov, including instructions for accessing agency documents, submitting comments, and viewing the docket, is available on the site under "How To Use This Site."
- *Postal Mail, Commercial Delivery, or Hand Delivery.* If you mail or deliver your comments about these proposed regulations, address them to Jessica Finkel, U.S. Department of Education, 1990 K Street, NW., Room 8031, Washington, DC 20006–8502.

Privacy Note: The Department's policy for comments received from members of the public (including those comments submitted by mail, commercial delivery, or hand delivery) is to make these submissions available for public viewing in their entirety on the Federal eRulemaking Portal at *http://www.regulations.gov.* Therefore, commenters should be careful to include in their comments only information that they wish to make publicly available on the Internet.

FOR FURTHER INFORMATION CONTACT: For general information, John Kolotos or Fred Sellers. Telephone: (202) 502–7762 or (202) 502–7502, or via the Internet at: *John.Kolotos@ed.gov* or *Fred.Sellers@ed.gov.*

Information regarding the regulatory impact analysis or other data, can be found at the following Web site: *http://www2.ed.gov/policy/highered/reg/hearulemaking/2009/integrity.html.*

If you use a telecommunications device for the deaf (TDD), call the Federal Relay Service (FRS), toll free, at 1–800–877–8339.

Individuals with disabilities can obtain this document in an accessible format (*e.g.,* Braille, large print, audiotape, or computer diskette) on request to one of the contact persons listed under **FOR FURTHER INFORMATION CONTACT**.

SUPPLEMENTARY INFORMATION:

Invitation To Comment

As outlined in the section of this notice entitled *Negotiated Rulemaking,* significant public participation, through a series of three regional hearings and three negotiated rulemaking sessions, occurred in developing this notice of proposed rulemaking (NPRM). In accordance with the requirements of the Administrative Procedure Act, the Department invites you to submit comments regarding these proposed regulations on or before September 9, 2010. To ensure that your comments have maximum effect in developing the final regulations, we urge you to identify clearly the specific section or sections of the proposed regulations that each of your comments addresses and to arrange your comments in the same order as the proposed regulations.

We invite you to assist us in complying with the specific requirements of Executive Order 12866 and its overall requirement of reducing regulatory burden that might result from these proposed regulations. Please let us know of any additional opportunities we should take to reduce potential costs or increase potential benefits while preserving the effective and efficient administration of the programs.

During and after the comment period, you may inspect all public comments about these proposed regulations by accessing Regulations.gov. You may also inspect the comments, in person, in Room 8031, 1990 K Street, NW., Washington, DC, between the hours of 8:30 a.m. and 4 p.m., Eastern time, Monday through Friday of each week except Federal holidays.

Assistance to Individuals With Disabilities in Reviewing the Rulemaking Record

On request, we will supply an appropriate aid, such as a reader or print magnifier, to an individual with a disability who needs assistance to review the comments or other documents in the public rulemaking record for these proposed regulations. If you want to schedule an appointment for this type of aid, please contact one of the persons listed under **FOR FURTHER INFORMATION CONTACT**.

Negotiated Rulemaking

Section 492 of the HEA requires the Secretary, before publishing any proposed regulations for programs authorized by title IV of the HEA, to obtain public involvement in the development of the proposed regulations. After obtaining advice and recommendations from the public, including individuals and representatives of groups involved in the Federal student financial assistance programs, the Secretary must subject the proposed regulations to a negotiated rulemaking process. All proposed regulations that the Department publishes on which the negotiators reached consensus must conform to final agreements resulting from that process unless the Secretary reopens the process or provides a written explanation to the participants stating why the Secretary has decided to depart from the agreements. Further information on the negotiated rulemaking process can be found at: *http://www.ed.gov/policy/highered/leg/hea08/index.html.*

On September 9, 2009, the Department published a notice in the **Federal Register** (74 FR 46399) announcing our intent to establish two negotiated rulemaking committees to prepare proposed regulations. One committee would develop proposed regulations governing foreign institutions, including the implementation of the changes made to the HEA by the Higher Education Opportunity Act (HEOA), Public Law 110–315, that affect foreign institutions. A second committee would develop proposed regulations to improve integrity in the title IV, HEA programs. The notice requested nominations of individuals for membership on the committees who could represent the interests of key stakeholder constituencies on each committee.

Team I—Program Integrity Issues (Team I) met to develop proposed regulations during the months of November 2009 through January 2010.

The Department developed a list of proposed regulatory provisions, including provisions based on advice and recommendations submitted by individuals and organizations as testimony to the Department in a series

of three public hearings held on the following dates:

- June 15, 2009, at Community College of Denver in Denver, CO.
- June 18, 2009, at University of Arkansas in Little Rock, AR.
- June 22, 2009 at Community College of Philadelphia in Philadelphia, PA.

In addition, the Department accepted written comments on possible regulatory provisions submitted directly to the Department by interested parties and organizations. A summary of all oral and written comments received is posted as background material in the docket for this NPRM. Transcripts of the regional meetings can be accessed at *http://www2.ed.gov/policy/highered/reg/hearulemaking/2009/negreg-summerfall.html#ph.*

Department staff also identified issues for discussion and negotiation.

At its first meeting, Team I reached agreement on its protocols. These protocols provided that for each community identified as having interests that were significantly affected by the subject matter of the negotiations, the non-Federal negotiators would represent the organizations listed after their names in the protocols in the negotiated rulemaking process.

Team I included the following members:

Rich Williams, U.S. PIRG, and Angela Peoples (alternate), United States Student Association, representing students.

Margaret Reiter, attorney, and Deanne Loonin (alternate), National Consumer Law Center, representing consumer advocacy organizations.

Richard Heath, Anne Arundel Community College, and Joan Zanders (alternate), Northern Virginia Community College, representing two-year public institutions.

Phil Asbury, University of North Carolina, Chapel Hill, and Joe Pettibon (alternate), Texas A & M University, representing four-year public institutions.

Todd Jones, Association of Independent Colleges and Universities of Ohio, and Maureen Budetti (alternate) National Association of Independent Colleges and Universities, representing private, nonprofit institutions.

Elaine Neely, Kaplan Higher Education Corp., and David Rhodes, (alternate), School of Visual Arts, representing private, for-profit institutions.

Terry Hartle, American Council on Education, and Bob Moran (alternate), American Association of State Colleges and Universities, representing college presidents.

David Hawkins, National Association for College Admission Counseling, and Amanda Modar (alternate) National Association for College Admission Counseling, representing admissions officers.

Susan Williams, Bridgeport University, and Anne Gross (alternate), National Association of College and University Business Officers, representing business officers.

Val Meyers, Michigan State University, and Joan Berkes (alternate), National Association of Student Financial Aid Administrators, representing financial aid administrators.

Barbara Brittingham, Commission on Institutions of Higher Education of the New England Association of Schools and Colleges, Sharon Tanner (1st alternate), National League for Nursing Accreditation Commission, and Ralph Wolf (2nd alternate), Western Association of Schools and Colleges, representing regional/programmatic accreditors.

Anthony Mirando, National Accrediting Commission of Cosmetology Arts and Sciences, and Michale McComis (alternate), Accrediting Commission of Career Schools and Colleges, representing national accreditors.

Jim Simpson, Florida State University, and Susan Lehr (alternate), Florida State University, representing work force development.

Carol Lindsey, Texas Guaranteed Student Loan Corp, and Janet Dodson (alternate), National Student Loan Program, representing the lending community.

Chris Young, Wonderlic, Inc., and Dr. David Waldschmidt (alternate), Wonderlic, Inc., representing test publishers.

Dr. Marshall Hill, Nebraska Coordinating Commission for Postsecondary Education, and Dr. Kathryn Dodge (alternate), New Hampshire Postsecondary Education Commission, representing State higher education officials.

Carney McCullough and Fred Sellers, U.S. Department of Education, representing the Federal Government.

These protocols also provided that, unless agreed to otherwise, consensus on all of the amendments in the proposed regulations had to be achieved for consensus to be reached on the entire NPRM. Consensus means that there must be no dissent by any member.

During the meetings, Team I reviewed and discussed drafts of proposed regulations. At the final meeting in January 2010, Team I did not reach consensus on the proposed regulations. The proposed regulations in this document focus on the issue of whether certain programs lead to gainful employment in recognized occupations. A separate NPRM for all of the other Program Integrity issues discussed during the meetings was published on June 18, 2010.

Background

For-profit postsecondary education, along with occupationally specific training at other institutions, has long played an important role in the nation's system of postsecondary education and training. Many of the institutions offering these programs have recently pioneered new approaches to enrolling, teaching, and graduating students. In recent years, enrollment has grown rapidly, nearly tripling to 1.8 million between 2000 and 2008. This trend is promising and supports President Obama's goal of leading the world in the percentage of college graduates by 2020. The President's goal cannot be achieved without a healthy and productive higher education for-profit sector.

However, the programs offered by the for-profit sector must lead to measurable outcomes, or those programs will devalue postsecondary credentials through oversupply. The Government Accountability Office (GAO) had noted this problem in its work dating to the 1990's. Specifically, GAO found that occupation-specific training programs that lacked a general education component made graduates of for-profit institutions less versatile and limited their opportunities for employment outside their field. GAO also found that there were labor oversupplies when the numbers of expected job openings were compared to the corresponding number of postsecondary graduates who completed training programs. Oversupply in the labor market results in unemployment and a decline in real wages. Generally, the impact is felt most significantly by recent graduates and adversely affects their ability to support themselves and their families, as well as their ability to repay their student loans.

The Department of Education Organization Act gives the Secretary broad responsibility to establish the regulatory requirements necessary for appropriately managing the Department and its programs. Additionally, under the Higher Education Act of 1965, as amended (HEA), the Department has the responsibility to ensure that institutions of higher education, including for-profit institutions, meet minimum standards if they choose to participate in the title IV, HEA programs (Federal student aid programs). For the programs that would

be subject to these proposed regulations, one of these minimum standards is that the programs must lead to gainful employment in a recognized occupation.

Many for-profit institutions derive most of their income from the Federal student aid programs. In 2009, the five largest for-profit institutions received 77 percent of their revenues from the Federal student aid programs. This figure that does not include revenue received from certain Federal student loans (not authorized by the HEA) that are exempted under the so-called 90/10 rule, or other revenue derived from government sources including Federal Veterans' education benefits, Federal job training programs, and State student financial aid programs. A recent study completed for the Florida legislature concluded that for-profit institutions were more expensive for taxpayers on a per-student basis due to their high prices and large subsidies.

The proposed standards for institutions participating in the title IV, HEA programs are necessary to protect taxpayers against wasteful spending on educational programs of little or no value that also lead to high indebtedness for students. The proposed standards will also protect students who often lack the necessary information to evaluate their postsecondary education options and may be mislead by skillful marketing, resulting in significant student loan debts without meaningful career opportunities. Unlike public or private nonprofit institutions, for-profit institutions are legally obligated to make profitability for shareholders the overriding objective. Furthermore, for-profit institutions may be subject to less oversight by States and other entities.

There are reasons for concern that some students attending for-profit institutions have not been well served. Student loan debt is higher among graduates of for-profit institutions. For example, the median debt of a graduate of a two-year for-profit institution is $14,000, while most students at community colleges have no student loan debt. There are 18 title IV, HEA loan defaults for every 100 graduates of for-profit institutions, compared to only 5 title IV, HEA loan defaults for every 100 graduates of public institutions. Investigations and news reports have also produced anecdotal evidence of low-quality programs that leave students with large debts and poor prospects for employment. Despite these concerns, these institutions and suspect programs have never been required to substantiate their claim that they meet the statutory requirement of preparing students for "gainful employment."

Summary of Proposed Regulations

Under these proposed regulations, the Department would assess whether a program provides training that leads to gainful employment by applying two tests: One test based upon debt-to-income ratios and the other test based upon repayment rates. Based on the program's performance under these tests, the program may be eligible, have restricted eligibility, or be ineligible. A program that meets both of these tests, or whose debt-to-income ratio is very low, would continue to be eligible for title IV, HEA program funds without restrictions, while a program that does not meet any of the tests would become ineligible. A program that meets only one of the tests would be placed in a restricted eligibility status, unless it has a high repayment rate.

Under certain circumstances, the proposed regulations would also require an institution to disclose the test results and alert current and prospective students that they may difficulty repaying their loans.

This proposed use of two measures is a balanced approach that gives institutions flexibility in how to demonstrate that they prepare students for gainful employment. The debt-to-income ratio provides a measure of program completers' ability to repay their loans, and the proposed targets were set based upon industry practices and expert recommendations. The use of discretionary income would recognize that borrowers with higher incomes can afford to devote a larger share of their income to loan repayments, while the use of annual income would benefit programs whose borrowers have lower earnings.

Under the debt-to-income test, programs whose completers typically have annual debt service payments that are 8 percent or less of average annual earnings or 20 percent or less of discretionary income would continue to qualify, without restrictions, for title IV, HEA program funds. Programs whose completers typically face annual debt service payments that exceed 12 percent of average annual earnings and 30 percent of discretionary income may become ineligible.

Debt service rates have a connection to whether borrowers will default on their loans. Borrowers with rates above the 8 percent threshold, for example, have a default rate of 10.2 percent, compared to a rate of 5.4 percent for those below the threshold.[1] Borrowers with debt rates above the 12 percent threshold, for example, have a default rate of 10.9 percent.[2]

The repayment rate is a measure of whether program enrollees are repaying their loans, regardless of whether they completed the program. This measure would provide some assurance to programs that may have high debt-to-income ratios for completers but enroll prepared and responsible students who understand their financial obligations. Programs whose former students have a loan repayment of at least 45 percent will continue to be eligible. Programs whose former students have loan repayment rates below 45 percent but at least 35 percent may be placed on restricted status. Programs whose former students have loan repayment rates below 35 percent may become ineligible.

A program that does not satisfy either the debt-to-income ratio or the 45 percent rate but has a loan repayment rate of at least 35 percent would be subject to restrictions and additional oversight by the Department.

The proposed regulations also would require an institution whose program does not have a loan repayment rate of at least 45 percent and an annual loan payment that is either 20 percent or less of discretionary income or 8 percent or less of average annual income, to alert current and prospective students that they may have difficulty repaying their loans.

Recognizing the potential impact of the proposed regulations on some students seeking a postsecondary education, the proposed regulations would provide for a one-year transition period during which the Department would limit the number of programs declared ineligible to the lowest-performing programs producing no more than five percent of completers during the prior award year. Additional programs and programs that fail to meet the debt thresholds but fall outside the five percent cap during the transition year would be subject to the same requirements as programs on a restricted eligibility status.

Significant Proposed Regulations

We group major issues according to subject, with appropriate sections of the proposed regulations referenced in parentheses. We discuss other substantive issues under the sections of the proposed regulations to which they pertain. Generally, we do not address proposed regulatory provisions that are technical or otherwise minor in effect.

[1] *Source:* U.S. Department of Education, National Center for Education Statistics, B&B: 93/03 Baccalaureate and Beyond Longitudinal Study.

[2] *Source:* U.S. Department of Education, National Center for Education Statistics, B&B: 93/03 Baccalaureate and Beyond Longitudinal Study.

Part 668 Student Assistance General Provisions

Gainful Employment in a Recognized Occupation (§ 668.7)

Section 102(b) and (c) of the HEA defines, in part, a proprietary institution and a postsecondary vocational institution, respectively, as institutions that provide an eligible program of training that prepares students for gainful employment in a recognized occupation. Section 101(b)(1) of the HEA defines an institution of higher education, in part, as any institution that provides not less than a one-year program of training that prepares students for gainful employment in a recognized occupation.

The Department's current regulations in §§ 600.4(a)(4)(iii), 600.5(a)(5), and 600.6(a)(4) mirror the statutory provisions, and like the statute, do not define or further describe the meaning of the phrase "gainful employment."

General

The proposed regulations are intended to address growing concerns about unaffordable levels of loan debt for students attending postsecondary programs that presumptively provide training that leads to gainful employment in a recognized occupation. Under the proposed regulatory framework, to determine whether these programs provide training that leads to gainful employment, as required by the HEA, the Department would take into consideration repayment rates on Federal student loans, the relationship between total student loan debt and earnings, and in some cases, whether employers endorse program content.

The Department would consider that a program prepares students for gainful employment if the loan debt incurred by the typical student attending that program is reasonable. The regulations would establish measures of the relationship between loan debt and postcompletion employment income (a loan repayment rate and debt-to-income measures based on discretionary income and average annual earnings) and set reasonable thresholds for each measure. As long as the program satisfies the debt thresholds, an institution could continue to offer title IV aid to students in the program without additional oversight from the Department. Otherwise, the program would either become ineligible for title IV, HEA program funds or the institution's ability to disburse Federal funds to students attending that program would be restricted.

The trends in earnings, student loan debt, loan defaults, and loan repayment that underscore the need for the Secretary to act are discussed more fully in Appendix A to this document.

Debt Measures and Thresholds

Under the loan repayment rate in proposed § 668.7(a), the relationship would be reasonable if students who attended the program (and are not in a military or in-school deferment status) repay their Federal loans at an aggregate rate of at least 45 percent. The rate would be based on the total amount of loans repaid divided by the original outstanding balance of all loans entering repayment in the prior four Federal fiscal years (FFY). A loan would be counted as being repaid if the borrower (1) made loan payments during the most recent fiscal year that reduced the outstanding principal balance, (2) made qualifying payments on the loan under the Public Service Loan Forgiveness Program, as provided in 34 CFR 685.219(c), or (3) paid the loan in full. Other borrowers who are meeting their legal obligations but are not actively repaying their loans, such as those in deferment or forbearance, are not considered to be in repayment.

Based on data available (*see* Appendix A for more information about these data), the following chart shows the Department's estimate of the distribution of loan repayment rates by sector of all institutions, not only those subject to these regulations, that would satisfy loan repayment thresholds of 45 and 35 percent.

INSTITUTIONAL-LEVEL REPAYMENT RATES

Sector	Number of institutions	% At least 45%	% Between 35–45%	% Below 35%
Private for-profit 2-year	565	32.92	23.19	43.89
Private for-profit 4-year or above	218	25.23	32.57	42.20
Private for-profit less-than-2-year	946	40.70	22.09	37.21
Private nonprofit 2-year	156	76.28	9.62	14.10
Private nonprofit 4-year or above	1434	78.31	10.53	11.16
Private nonprofit less-than-2-year	45	64.44	11.11	24.44
Public 2-year	860	43.14	29.53	27.33
Public 4-year or above	590	74.24	14.92	10.85
Public less-than-2-year	148	74.32	19.59	6.08
Grand Total	4962	56.75	19.21	24.04

Because the loan repayment rate considers program completers and noncompleters, a low rate may indicate that many noncompleters obtained loans they are now unable to repay. Note that this chart gives an indication of the rates at which graduates are entering into deferments that are not related to military service or returning to postsecondary education, entering into forbearances or are simply unwilling or unable to pay more than interest accrued on their Federal student loans.

The number of institutions with very low loan repayment rates, particularly in the for-profit sector, is alarmingly high. Based on these data, we propose to allow a program with a loan repayment rate as low as 35 percent to remain eligible, but may restrict that eligibility. Under proposed § 668.7(a) and (e), an institution whose program is in a restricted status would have to provide annually documentation from employers not affiliated with the institution affirming that the curriculum of the program aligns with recognized occupations at those employers' businesses and that there are projected job vacancies or expected demand for those occupations at those businesses. Moreover, the Department would limit the enrollment of title IV aid recipients in that program to the average number enrolled during the prior three award years. While we believe that these restrictions are appropriate considering the poor performance of these programs, we seek comment on whether programs with a loan repayment rate of less than 45 percent but higher than 35 percent

should be subject to the loss of title IV, HEA program funds.

Even with a repayment rate of less than 35 percent, under the proposed regulations a program would still be eligible for title IV, HEA program funds, without restrictions, as long as the program has an acceptable debt-to-income ratio. We seek comment on whether a program with a loan repayment rate below a specified threshold should be ineligible for title IV, HEA funds, regardless of the debt-to-income ratio.

For the debt-to-income measures in proposed § 668.7(a)(1)(ii) and (iii), the relationship would be reasonable if the annual loan payment (based on a 10-year repayment plan) of the typical student completing the program is 30 percent or less of discretionary income or 12 percent or less of average annual earnings. The measure would use the most current income available of the students who completed the program in the most recent three years (three-year period or 3YP). However, in cases where an institution could show that the earnings of students in a particular program increase substantially after an initial employment period, the measure would use the most current earnings of students who completed the program four, five, and six years prior to the most recent year (*i.e.,* the prior three-year period or P3YP). When prior three-year data are used, the relationship would be reasonable if the annual loan payment is less than 20 percent of discretionary income or less than 8 percent of average annual earnings.

The proposed debt-to-income measures, one based on discretionary income and the other on average annual earnings, are alternatives to the loan repayment rate. The debt measure for discretionary income is modeled on the Income-Based Repayment (IBR) plan. IBR assumes that borrowers with incomes below 150 percent of the poverty guideline are unable to make any payment, while those with incomes above that level can devote 15 percent of each added dollar of earnings (Congress reduced that to 10 percent for new borrowers starting in 2014.) to loan payments. While the Federal Government has established policies allowing borrowers with financial hardships to reduce payments to 10 or 15 percent of their discretionary income, those thresholds are not appropriate for defining gainful employment. The IBR formula is based on research conducted by economists Sandy Baum and Saul Schwartz, who recommended 20 percent of discretionary income as the outer boundary of manageable student loan debt. This approach is recommended by others including Mark Kantrowitz, publisher of Finaid.org. However, we cannot rely solely on this approach because any program would fail the debt measure if the average earnings of those completing the program were below 150 percent of the poverty guideline, regardless of the level of debt incurred. To avoid this consequence, we adopted the proposal made during negotiated rulemaking that borrowers should not devote more than 8 percent of annual earnings toward repaying their student loans. This percentage has been a fairly common credit-underwriting standard, as many lenders typically recommend that student loan installments not exceed 8 percent of the borrower's pretax income so that borrowers have sufficient funds available to cover taxes, car payments, rent or mortgage payments, and household expenses. Other studies have also accepted the 8 percent standard, and some State agencies have established similar guidelines ranging from 5 percent to 15 percent of gross income. These percentages are derived from home mortgage underwriting criteria where total household debt should not exceed 38 to 45 percent of pretax income, with 30 percent being available for housing-related debt.

For these proposed regulations, we have increased the research-based and industry-used debt-to-income measures by 50 percent (from 20 to 30 percent of discretionary income, and from 8 to 12 percent of annual earnings) to establish thresholds above which it becomes unambiguous that a program's debt levels are excessive.

Summary
Gainful Employment Proposed Regulations

Measure		Debt-to-Income		
	Metric	Using 3YP: - Above 12% of annual earnings **AND** - Above 30% of discretionary income Using P3YP: - Above 8% of annual earnings **AND** - Above 20% of discretionary income	Using 3YP: -Between 8% and not more than 12% of annual earnings **OR** -Between 20% and not more than 30% of discretionary income Using P3YP: Not Applicable	Using 3YP OR P3YP: -8% or less of annual earnings, **OR** 20% or less of discretionary income
Repayment Rate	At least 45%	Eligible	Eligible	Eligible (No Debt Warning)
	At least 35% and less than 45%	Restricted	Restricted	Eligible
	Below 35%	Ineligible	Restricted	Eligible

In prior generations, most graduates repaid their loans within 10 years of completing college. The standard repayment plan chosen by most borrowers remains 10 years. Among bachelor's degree recipients in 1992–93 who had student loan debt, about three-fourths fully repaid their loans in less than 10 years. Those reporting higher incomes were most likely to have repaid their loans (even though they had higher average debt), indicating that earnings played a role in their ability—or at least their willingness—to repay. For many adults, paying off student loans is an important milestone. Many borrowers see a tradeoff between making student loan payments and other important financial decisions such as saving for retirement, buying a home, or saving for their own children's education.

While the Federal Government is providing new options for repaying loans over extended periods of time to protect a portion of the borrower population from the adverse impact of nonpayment, these repayment options should not be the norm.

All other things being equal, students would be better off without student loan debt. The less debt they owe, the more of their income they can devote to home purchases, retirement savings, or serving the community. Student loan debt must be weighed against the education and training (and increased employment income) that higher education can provide. To the extent that the education and its accompanying student loan debt do not provide the necessary skills to provide increased wages and employment, public policy should attempt to minimize or eliminate that cost to students and society.

Excess student debt affects students and society in three significant ways: Payment burdens on the borrower; the cost of the loan subsidies to taxpayers; and the negative consequences of default (which affect borrowers and taxpayers).

Loan repayments that outweigh the benefits of the education and training are an inefficient use of the borrower's resources. If a student makes that choice fully informed and using his or her own funds, it is not a matter for public policy. But if the availability of Federal student aid increases the likelihood that a student will enroll at an institution of higher education, the Federal Government should consider ways to ensure that student borrowers are not unduly burdened, even if they would

eventually repay the loans. This concern motivates the debt-to-income ratio, a measure of the potential individual burden incurred by taking out loans, to ensure that students on an individual basis benefit from the receipt of Federal funds.

The second cost is taxpayer subsidies. When a borrower is unemployed or is forced because of low income to obtain a forbearance or deferment, the Government waives the interest on subsidized Stafford and Perkins loans. For example, the cost to the Government of three years of deferment is up to 20 percent of the value of the loan. Also, borrowers who have low incomes but high debt may reduce their payments through income-based or income-contingent repayment programs. These programs can either be at little or no cost to the Government or as much as the full amount of the loan with interest.

Deferments and repayment options are important protections for borrowers because while higher education generally brings higher earnings, there is no guarantee for the individual. Policies that assist those with high debt burdens are a critical form of insurance: They tell all Americans that the Federal Government will take on the potential risk of an education not "paying off" for a specific individual. However, these policies should not mean that institutions should increase the level of risk to the individual student or the taxpayer—just as the existence of homeowners insurance does not mean builders should make houses more flammable. The insurance is important; but public policy must protect against the moral hazard of it being seen as a license for providing a worse product to consumers or to taxpayers.

The third cost is default. The Government covers the cost of defaults on Federal student loans, $9.2 billion in fiscal year 2009. Ultimately this cost is mitigated by the Department's success in collection, using such tools as wage garnishment, Federal and State tax refund seizure, seizure of any other Federal payment, and Federal court actions. Nonetheless, the taxpayer costs can be significant. Based on historical collections, the net present value cost of the $9.2 billion of loans that defaulted in fiscal year 2009 is estimated at approximately $1 billion. This concern—protecting the taxpayer—motivates the repayment rate measure, which indicates the taxpayer's exposure to delayed repayment or default.

An additional cost of default is the damage to students and their family and community. Although the decision to enter into loans is made voluntarily by students, a wealth of evidence suggests that many individuals lack sufficient information—or may be manipulated with false information or assurances—regarding future employment prospects and program costs, and thus are unable to properly evaluate their eventual ability to repay loans. Former students who default on Federal loans cannot receive additional title IV aid for postsecondary education. Their credit rating is destroyed, undermining their ability to rent a house, get a mortgage, or purchase a car. To the extent they can get credit, they pay much higher interest. In some States, they may be denied certain occupational licenses. And, increasingly, employers consider credit records in their hiring decisions. Furthermore, particularly for former students from disadvantaged neighborhoods, the stigma of default can send an unfortunate message to others—that seeking an education can have disastrous results. Combined with the evidence suggesting that individuals may not have the ability to evaluate fully the costs and benefits of entering into loans, the potential for substantial adverse outcomes motivates the consumer protection approach the Department is taking through these proposed regulations.

At all types of institutions, student debt is growing and will cause more students to allocate more of their future income toward repayment, whether through larger or longer payments. (*See* Tables A–1 and A–2 of Appendix A for additional details). Student loan data show that this problem is particularly problematic at for-profit institutions. For certificate, associate's degree, and bachelor's degree programs, debt levels are highest at for-profit institutions.[3] For example, in 2007–08:[4]

- 13 percent of baccalaureate recipients from public four-year institutions carried at least $30,000 of Federal and private student loan debt. Among graduates of private nonprofit colleges, 25 percent had that level of student debt. And at for-profit institutions, 57 percent of the baccalaureate recipients carried student loan debts of $30,000 or more.
- At the associate's degree level, only about five percent of public college graduates have debt of $20,000 or more, while 42 percent of for-profit graduates have debt at those levels.
- For certificate recipients, less than 2 percent at public institutions and 11 percent at for-profit institutions have debt of $20,000 or more.

The proposed regulations would lessen the potential for these negative consequences by ensuring that programs subject to the gainful employment standards actually produce students with sufficient incomes (relative to their debt) to make their debt payments.

Calculating the Loan Repayment Rate

Under proposed § 668.7(b), the Department would calculate the loan repayment rate annually using the ratio:

$$\frac{\text{OOPB of LPF plus OOPB of RPL}}{\text{OOPB of all loans for students attending the program}}$$

The OOPB (original outstanding principal balance) would be the amount of the outstanding balance on FFEL and/or Direct loans owed by students who attended the program, including capitalized interest, as of the date those loans entered repayment. The OOPB of all loans would include the FFEL and Direct loans that entered repayment in the four preceding Federal fiscal years (FFYs). LPF (loans paid in full) would be loans to the program's students that have been paid in full. However, the LPF would not include any loans paid through a consolidation loan until the consolidation loan is paid in full. The OOPB of LPF in the numerator of the ratio would be the total amount of OOPB for these loans.

RPL (reduced principal loan) would be calculated using loans where borrower payments during the most recently completed FFY reduced the outstanding principal balance of that loan in that year. RPL would also include loans for borrowers whose

[3] For graduate and professional programs, separate data are not available on for-profit colleges. For professional degrees, the known debt levels at public and nonprofit institutions could be problematic if earnings are not sufficient.

[4] National Postsecondary Student Aid Survey, as reported in Trends in Student Aid 2009, College Board.

payments and employment during that FFY qualify for the Public Service Loan Forgiveness program under 34 CFR 685.219(c). The OOPB of RPL in the numerator of the ratio would be the total amount of the OOPB for these loans.

Finally, the ratio would not include the OOPB of borrowers on an in-school deferment or a military-related deferment status or the OOPB of borrowers entering repayment in the final six months of the most recent FFY.

Calculating the Debt-to-Income Measures

Under proposed § 668.7(c), the Department would calculate annually the debt-to-income measures for each program to determine whether the annual loan payment is less than the discretionary (30 and 20 percent) and earnings (12 and 8 percent) thresholds using the following formulas:

- Annual loan payment < Discretionary threshold * (Average Annual Earnings − (1.5 * Poverty Guideline)).
- Annual loan payment < Earnings threshold * Average Annual Earnings.

Both debt measures would examine the annual loan payment of program completers in relationship to the average annual earnings of those completers to calculate whether a program met the gainful employment standard.

The annual loan payment would be the median loan debt of students who completed a program during the three-year period under standard repayment terms (*i.e.,* 10-year repayment schedule and the current annual interest rate on Federal unsubsidized loans). Loan debt would include title IV, HEA program loans, except Parent PLUS loans, and any private educational loans or debt obligations arising from institutional financing plans. However, it would not include any student loan that a student incurred at prior institutions or at subsequent institutions unless the other and current institutions are under common ownership or control, or are otherwise related entities.

The Department would calculate the average annual earnings by using most currently available actual, average annual earnings, obtained from the Social Security Administration (SSA) or another Federal agency, of the students who completed the program during the three-year period. However, in certain cases, the measure could include the current earnings data for students who completed the program for a longer employment period (students who completed the program in the fourth, fifth, and sixth award years preceding the most recent three-year period) if the institution could show that students completing the program typically experience a significant increase in earnings after the first three years. The institution would have to provide information to the Department such as survey results of employers or former students, or through other empirical evidence, documenting the increased earnings.

As discussed in the Paperwork Reduction Act portion of this notice, institutions will have an opportunity to review and provide comments on the collection of new data associated with this provision. Interested parties will have an opportunity to provide input into this requirement through that process or in response to this notice of proposed rulemaking.

Under proposed § 668.7(a), a program would meet the gainful employment standard if the annual loan payment of its students is 30 percent or less of discretionary income or 12 percent or less of average annual earnings of its students. Discretionary income would be defined as the difference between average annual income and 150 percent of the most current Poverty Guideline for a single person in the continental United States (available at *http://aspe.hhs.gov/poverty*). We specifically seek comment on whether the 30 percent threshold for the first three years of employment is appropriately rigorous or whether the Department should consider using the 20 percent of discretionary income or 8 percent of average annual earnings to define programs as ineligible. The less restrictive standard is used here because, as a general matter, the Department would be assessing the programs during a borrower's first three years after leaving the postsecondary education institution. In any case, however, where the prior three-year period is used, the annual loan payment would have to be less than 20 percent of discretionary income or less than 8 percent of average annual earnings.

Consequences of Meeting or Not Meeting the Thresholds; Timelines; Transition

Effective July 1, 2012, under proposed § 668.7(d), an institution would be required to alert prospective and currently enrolled students they may have difficulty in repaying their loans under certain circumstances. The institution would have to provide a prominent warning in its promotional, enrollment, registration, and other materials, including those on its Web site, and to prospective students when conducting person-to-person recruiting activities. The institution must also provide the most recent debt-to-income ratios and the loan repayment rate for that program. An institution must provide the warning if the program's repayment rate is less that 45 percent and, using 3YP and, if applicable, P3YP, the debt-to-income ratio is greater than 8 percent of average annual earnings or 20 percent of discretionary income.

Under proposed § 668.7(a) and (e), the Department would place a program on a restricted status if the program's repayment rate is less than 45 percent and the program's annual loan payment is more than 20 percent of discretionary income and more than 8 percent of average annual income. For a restricted program, the institution would be required to work with employers to assure that the training program is meeting their needs, and limit new students enrollments in that program to the average enrollment level for the prior three years. These restrictions are intended to encourage an institution to improve the program to better meet the needs of students and the relevant employers identified by the institution.

Moreover, under proposed § 668.7(a) and (f), if the program does not satisfy at least one of the debt thresholds in paragraph (a)(1) of this section, effective July 1, 2012, it would not meet the gainful employment standard. The Department would notify the institution of the program's ineligibility, and new students attending the program would not qualify for title IV, HEA program funds. However, an institution would be allowed to disburse title IV, HEA program funds to current students who began attending the program before it became ineligible for the remainder of the award year and for the award year following the date of the Department's notice.

For the award year beginning on July 1, 2012, a program could fail to meet one of the measures but still remain eligible. For this transition year, the Department would cap the number of programs declared ineligible to the lowest-performing programs producing no more than five percent of completers during the prior award year, eliminating the risk of large and immediate displacement of students. Specifically, under proposed § 668.7(f)(2), the Department would determine which programs would fall within the five percent cap by:

(1) Sorting all programs subject to this section by category based solely on the credential awarded as determined by the Department (*e.g.,* certificate, associate degree, baccalaureate degree, and graduate and professional degree) and then within each category, by loan

repayment rate, from lowest rate to highest rate.

(2) For each category of programs, beginning with the ineligible program with the lowest loan repayment rate, identifying the ineligible programs that account for a combined number of students that completed the programs in the most recently completed award year that do not exceed five percent of the total number of students who completed programs in that category.

For each ineligible program that falls within the five percent grouping for each category, the Department would notify the institution that the program no longer qualifies as an eligible program. For every other ineligible program, the Department would notify the institution that it must limit the enrollment of title IV, HEA program recipients in that program to the average number of title IV, HEA program recipients enrolled during the prior three award years and provide the same employer affirmations and debt disclosures that apply to programs with low repayment rates and high debt-to-income ratios.

Additional Programs

Under proposed § 668.7(g), before an institution could offer a new program that is eligible for title IV aid, it would apply to have the program approved by the Department. As part of its application, the institution would need to provide (1) the projected enrollment for the program for the next five years for each location of the institution that will offer the additional program, (2) documentation from employers not affiliated with the institution that the program's curriculum aligns with recognized occupations at those employers' businesses, and that there are projected job vacancies or expected demand for those occupations at those businesses, and (3) if the additional program constitutes a substantive change, documentation of the approval of the substantive change from its accrediting agency.

In determining whether to approve the new program, under proposed § 668.7(g)(2), the Department could restrict the approval for an initial period based on the institution's enrollment projections and demonstrated ability to offer programs that lead to gainful employment.

If the new program constitutes a substantive change based solely on program content, it would be subject to the gainful employment measures as soon as data on the loan repayment rate and debt measures are available. Otherwise, the loan repayment rate and debt measures for the new program would be based, in part, on loan data from the institution's other programs currently or previously offered that are in the same job family. The Bureau of Labor Statistics (BLS) describes a job family as a group of occupations based on work performed, skills, education, training, and credentials and identifies the SOC code (Standard Occupational Classification code) for each occupation in a job family at *http://www.bls.gov/oes/current/oes_stru.htm*.

The following charts provide in summary form a description of the consequences of meeting or not meeting the thresholds as well as the Department's proposed timelines.

BILLING CODE 4000–01–P

Criteria	Eligibility Status	Consequences
Loan repayment rate of at least 45 percent **AND** a debt-earnings ratio of 20 percent or less of discretionary income or 8 percent or less of average annual earnings.	*Eligible*	None.
Loan repayment rate of at least 45 percent **OR** a debt-earnings ratio of 20 percent or less of discretionary income or 8 percent or less of average annual earnings.	*Eligible*	Institutions must warn consumers and current students of high debt levels and provide the most recent debt measures for the program.
Loan repayment rate below 45 percent and unable to demonstrate debt-earnings of 20 percent of discretionary income or less or 8 percent or less of average annual earnings.	*Restricted*	Institutions must (1) demonstrate employer support for the program and (2) warn consumers and current students of high debt levels and provide the most recent debt measures for the program. The program is subject to limits on enrollment growth.
Loan repayment rate below 35 percent and a debt-earnings ratio above 30 percent of discretionary income and 12 percent of annual earnings.	*Ineligible*	No new students may receive title IV aid. Current students may continue to receive aid for the rest of the year and one additional award year. While phasing out a program, institutions must warn current and prospective students of high debt loads and reduced ability to repay their loans from projected earnings and provide the most recent debt measures for the program.
Program not in existence long enough to demonstrate repayment and debt-earnings outcomes.	*New programs*	Institution must demonstrate employer support for the program, and the new program is subject to limits on enrollment growth.

Timeline

July 1, 2011	**Data** (in the NPRM published on 6/18/10): Institutions would begin providing information to the Department about students who completed gainful employment programs during the previous three years. The Department would determine average earnings (using information from another Federal agency such as the Social Security Administration) and median student loan debt.
	Disclosure (in the NPRM published 6/18/10): Institutions must provide on their Web sites information about the occupations for which their gainful employment programs are preparing students, and the graduation rates and median debts in those programs.
	Program eligibility: Additional programs subject to the gainful employment regulations must have employer affirmations that the program's curriculum is designed to prepare students for jobs like those at the employer's company. The program is subject to growth restrictions until loan repayment and debt measure data are available. The number, location, and size of the job placements for the businesses must be commensurate with the projected size of the program.

July 1, 2012	**Warning**: Programs subject to the gainful employment regulations that fail to meet one of the debt thresholds must include a warning in all promotional materials and provide the most recent repayment rate and debt measures for the program.
	Program eligibility: To remain eligible for title IV, HEA program funds , gainful employment programs must either have a Federal loan repayment rate of not less than 35 percent, or have student debt levels below the debt threshold. For one year, there would be a five percent cap on the number of programs (measured on the number of program completers in an award year) that can lose eligibility in that year.
	Ineligible programs that remain outside the cap would be subject to the employer-affirmation and growth provisions applicable to additional programs.
	Programs with loan repayment rates below 45 percent that fail to meet one of the debt thresholds would be subject to employer-affirmation and growth provisions, and the institution may be provisionally certified.
Definitions	
Repayment Rate:	Of the program's former students entering repayment with Federal loans in the previous four FFYs, the proportion of loans for those students who are paying more than the interest charges (or fully repaid the loans) or are in full-time public service positions (i.e. eligible to seek Public Service Loan Forgiveness) in the most recent FFY. Borrowers using in-school and military deferments are excluded from both the numerator and denominator.

Average Annual Earnings	The average annual earnings, in the most recent year for which postcompletion data are available, for the program's graduates from the previous three years. An institution may seek to measure earnings of earlier graduates (four to six years prior) if graduates typically experience large earnings increases after an initial period of employment. Earnings data would be acquired by the Department from a Federal agency. We anticipate obtaining this data from the Social Security Administration (SSA).
Discretionary Income:	The amount of total income above 150 percent of the poverty level (domestic U.S., family size of one) for the applicable year.
Debt Threshold	Loan payments as a proportion of either discretionary income or total income. The loan payments are the amount, based on a flat 10-year amortization schedule, of all of a student's loans (Federal, private, and institutional) taken at the institution, assuming the unsubsidized Stafford loan interest rate (6.8 percent). For full eligibility the proportion must be below 20 percent of discretionary income or 8 percent of average annual earnings. Rates of 30 percent of discretionary income and 12 percent of average annual earnings and above trigger ineligibility unless the repayment rate is in compliance.

BILLING CODE 4000–01–C

Provisional Certification (§ 668.13)

The Department's current regulations in § 668.13(c) identify the conditions or reasons for which the Department may provisionally certify an institution. We are proposing to amend § 668.13(c)(1) to provide that the Department may provisionally certify an institution if one or more of its programs becomes restricted or ineligible under the gainful employment provisions in proposed § 668.7. The Department believes that provisional certification may be warranted in cases where an institution fails to take the actions necessary to keep its programs in compliance with the gainful employment provisions in § 668.7. This failure would be one factor considered by the Department when reviewing an institution's application for recertification of its program participation agreement.

Hearing Official (§ 668.90(a))

Current § 668.90(a)(3) sets forth the limitations on the matters that may be considered, or limitations on decisions that may be rendered by hearing officials in proceedings arising under subpart G of part 668. Under proposed § 668.90(a)(3)(vii), in a termination action against a program for not meeting the standards for gainful employment in § 668.7(a), the hearing official would accept as accurate the average annual earnings calculated by another Federal agency, so long as the other Federal agency provided that calculation for the list of program completers identified by the institution and accepted by the Department. The hearing official may consider evidence from an institution about earnings from its graduates to establish a different average annual earnings amount to be used with the debt measure, so long as that information is for the same individuals and determined to be reliable by the hearing official.

During the negotiated rulemaking sessions, some non-Federal negotiators highlighted the difficulty that institutions could encounter in obtaining earnings information from students who completed their programs. During these meetings, a separate proposal was discussed to use wage information from the Bureau of Labor Statistics (BLS) to represent earnings for program graduates. Some of the negotiators voiced concerns that the reported salaries might not be representative for a number of reasons such as regional variations and job classifications and that self-employed individuals might not be included in the BLS wage records, (although other information suggested that this information was included). Nevertheless, the Department is proposing to obtain average annual

earnings by program from another Federal agency, using actual wage information maintained by that Federal agency for a program's students. This information is and will be the best information available but, to preserve the confidentiality of individuals that may or may not have received a Federal benefit, neither the Department nor the institution will be able to review the wage information for specific program graduates. The Department and the institution will, however, be able to ensure that the data includes only those program completers that were included in the information provided by the institution under the notice of proposed rulemaking published by the Department on June 18, 2010.

Since the specific individuals' actual earnings information will not be available to the institution or to the Department, the proposed regulations limit the discretion of the hearing official to determining whether the average annual earnings at issue in a hearing were provided by the other Federal agency to the Department for the list of program completers identified by the institution and accepted by the Department. Since the average annual earnings will be calculated using an automated process that matches the program graduates with the wage information the other Federal agency is required to maintain, the Department believes it is sufficient to limit the review by a hearing official to whether the average annual earnings were provided for the list of program graduates that were identified by the institution and accepted by the Department. The hearing official may consider whether the institution can demonstrate that a program is eligible using a different amount for the average annual earnings of the program graduates with the debt measures for that program, so long as the institution demonstrates the average annual earnings information is reliable and for the same individuals who completed the program in question.

Executive Order 12866

Regulatory Impact Analysis

Under Executive Order 12866, the Secretary must determine whether the regulatory action is "significant" and therefore subject to the requirements of the Executive Order and subject to review by the OMB. Section 3(f) of Executive Order 12866 defines a "significant regulatory action" as an action likely to result in a rule that may (1) have an annual effect on the economy of $100 million or more, or adversely affect a sector of the economy, productivity, competition, jobs, the environment, public health or safety, or State, local or tribal governments or communities in a material way (also referred to as an "economically significant" rule); (2) create serious inconsistency or otherwise interfere with an action taken or planned by another agency; (3) materially alter the budgetary impacts of entitlement grants, user fees, or loan programs or the rights and obligations of recipients thereof; or (4) raise novel legal or policy issues arising out of legal mandates, the President's priorities, or the principles set forth in the Executive order.

Pursuant to the terms of the Executive order, we have determined this proposed regulatory action will have an annual effect on the economy of more than $100 million. Therefore, this action is "economically significant" and subject to OMB review under section 3(f)(1) of Executive Order 12866. Notwithstanding this determination, we have assessed the potential costs and benefits—both quantitative and qualitative—of this regulatory action and have determined that the benefits justify the costs.

The Summary of Effects tables that follow describe the estimated impact on programs that would be subject to these proposed regulations along with the number of students that would be affected.

BILLING CODE 4000–01–P

Percentage of Programs Subject to Proposed Gainful Employment Regulations

Measure		Debt-to-Income		
Total number of programs subject to the proposed regulation	Metric 52,980	Using 3YP: - Above 12% of annual earnings **AND** - Above 30% of discretionary income Using P3YP: - Above 8% of annual earnings **AND** - Above 20% of discretionary income	Using 3YP: -Between 8% and not more than 12% of annual earnings **OR** - Between 20% and not more than 30% of discretionary income Using P3YP: Not Applicable	Using 3YP OR P3YP: -8% or less of annual earnings, **OR** 20% or less of discretionary income
Repayment Rate	At least 45%	Eligible <1%	Eligible <1%	Eligible (No Debt Warning) 39%
	At least 35% and less than 45%	Restricted ---	Restricted 3%	Eligible 26%
	Below 35%	Ineligible 5%	Restricted 4%	Eligible 22%

--- No observations in the source data.

Impact of Gainful Employment Proposed Regulations on Students

Measure		Debt-to-Income		
Total number of students enrolled in programs subject to the proposed regulation	Metric 3,190,476	Using 3YP: - Above 12% of annual earnings **AND** - Above 30% of discretionary income Using P3YP: - Above 8% of annual earnings **AND** - Above 20% of discretionary income	Using 3YP: -Between 8% and not more than 12% of annual earnings **OR** - Between 20% and not more than 30% of discretionary income Using P3YP: Not Applicable	Using 3YP OR P3YP: -8% or less of annual earnings, **OR** 20% or less of discretionary income
Repayment Rate	At least 45%	Eligible <1%	Eligible <1%	Eligible (No Debt Warning) 34%
	At least 35% and less than 45%	Restricted ---	Restricted 7%	Eligible 28%
	Below 35%	Ineligible 8%	Restricted 1%	Eligible 21%

--- No observations in the source data.

Effect of Proposed Rule on Impacted Programs, Applying All Tests	Scenario 1	Scenario 2	Scenario 3
Programs by Status			
Fully Eligible	20,662	20,662	20,662
Ineligible	2,649	2,649	2,649
New Programs	*	*	*
Restricted	29,669	29,669	29,669
Total	52,980	52,980	52,980
Affected Students by Status			
Fully Eligible	2,618,476	2,618,476	2,617,476
Ineligible	307,000	307,000	307,000
New Programs	*	*	*
Restricted	265,000	265,000	266,000
Total	3,190,476	3,190,476	3,190,476
Detailed Impact of Ineligible Category			
Programs Ineligible	2,649	2,649	2,649
Students Completing Program	89,000	104,000	148,000
Students Enrolling in Another Program at the Same Institution	62,000	91,000	74,000
Students Enrolling At Another Institution in the Same Sector	88,000	56,000	48,000
Students Leaving Sector	38,000	24,000	21,000
Students Leaving Postsecondary Education	30,000	32,000	16,000
Core Revenues Leaving Institution ($mn)	1,060	672	575
Core Revenues Leaving Sector ($mn)	459	292	249
Core Revenues			

Permanently Lost ($mn)	364	383	191
Expenses Leaving Institution ($mn)	377	239	205
Expenses Leaving Sector ($mn)	164	104	89
Expenses Permanently Lost ($mn)	129	136	68
Changes in Federal Pell grants received by students ($mn)	(213)	(209)	(104)
Changes in Federal loans received by students ($mn)	20	21	11
Detailed Impact of Restricted Category			
Programs Restricted	29,669	29,669	29,669
Students Completing program	79,000	92,000	132,000
Students Enrolling in Another Program at the Same Institution	49,000	73,000	59,000
Students Enrolling At Another Institution in the Same Sector	76,000	49,000	41,000
Students Leaving Sector	35,000	22,000	19,000
Students Leaving Postsecondary Education	26,000	29,000	15,000
Core Revenues Leaving Institution ($mn)	922	592	500
Core Revenues Leaving Sector ($mn)	435	279	235
Core Revenues Permanently Lost ($mn)	321	355	178
Expenses Leaving Institution ($mn)	340	218	184
Expenses Leaving Sector ($mn)	165	106	89
Expenses Permanently Lost ($mn)	119	133	66
Changes in Federal grants received by students ($mn)	(110)	(123)	(62)
Changes in Federal loans received by students ($mn)	(9)	(10)	(5)

BILLING CODE 4000–01–C

The preceding table shows the estimated impact when the proposed regulations are fully implemented by July 1, 2012. A detailed analysis is found in Appendix A to this NPRM.

Paperwork Reduction Act of 1995

Proposed § 668.7 contains information collection requirements. Under the Paperwork Reduction Act of 1995 (44

U.S.C. 3507(d)), the Department has submitted a copy of this section to OMB for its review.

Section 668.7—Gainful Employment in a Recognized Occupation

The proposed regulations would impose new requirements on certain programs that by law must, for purposes of the title IV, HEA programs, prepare students for gainful employment in a recognized occupation. For public and private nonprofit institutions, a program that does not lead to a degree would be subject to the eligibility requirement that the program lead to gainful employment in a recognized occupation, while a program leading to a degree, including a two-academic-year program fully transferable to a baccalaureate degree, would not be subject to this eligibility requirement. For proprietary institutions, all eligible degree and nondegree programs would be required to lead to gainful employment in a recognized occupation, except for a liberal arts baccalaureate program under section 102(b)(1)(A)(ii) of the HEA.

As proposed in § 668.7(a)(3)(viii), in accordance with procedures established by the Department for the purposes of calculating the loan repayment rate under § 668.7(b), an institution must report the CIP codes for all students who attended a program at the institution whose FFEL or Direct Loan entered repayment in the prior four FFYs. As indicated earlier, there has been tremendous growth in occupational programs between 2000 and 2008, averaging 200,000 new students per year. Based upon data from our institutional eligibility and program participation unit within Federal Student Aid, the Department estimates the following number of affected institutions that offer programs that currently prepare students for gainful employment in recognized occupations. The Department estimates there are 2,086 proprietary institutions with occupational programs, there are 238 private, non-profit institutions with occupational programs, and there are 2,139 public institutions with occupational programs.

The Department estimates that in the first year of reporting CIP codes for all students who attended a program whose FFEL and Direct Loans entered repayment in the preceding four Federal fiscal years the burden would be as follows.

With respect to the 2,086 proprietary institutions, the Department estimates that 376,000 student (47 percent times 800,000) attended programs at those institutions during the preceding four FFYs. Of those 376,000, we estimate that 90 percent or 338,400 had title IV, HEA loans that entered repayment. At an average of .08 hours (5 minutes) per student to determine and report the CIP code, the Department estimates an increase in burden for proprietary institutions of 27,072 hours in OMB 1845–NEW4.

With respect to the 238 private non-profit institutions, the Department estimates that 40,000 students (5 percent times 800,000) attended programs at those institutions during the preceding four FFYs. Of those 40,000, we estimate that 60 percent or 24,000 had title IV, HEA loans that entered repayment. At an average of .08 hours (5 minutes) per student to determine and report the CIP code, the Department estimates an increase in burden for private non-profit institutions of 1,920 hours in OMB 1845–NEW4.

With respect to the 2,139 public institutions, the Department estimates that 384,000 students (48 percent times 800,000) attended those institutions during the preceding four FFYs. Of those 384,000, we estimate that 38 percent or 145,920 had title IV, HEA loans that entered repayment. At an average of .08 hours (5 minutes) per student to determine and report the CIP code, the Department estimates an increase in burden for public institutions of 11,674 hours in OMB 1845–NEW4.

Collectively, the Department estimates that the burden associated with determinations and reporting related to CIP codes for all students who attended an occupational program will increase to the affected institutions by 40,666 hours in OMB 1845–NEW4.

As proposed in § 668.7(c)(3)(i) and (ii), the Secretary determines annually for each program whether the annual loan payment is less than the discretionary income and the earnings thresholds in § 668.7(a). For annual earnings, the Secretary uses the most currently available actual, average annual earnings obtained from a Federal agency, of the students who completed the program during the 3YP and, if the data are available, during the P3YP. P3YP data are used if, in accordance with procedures established by the Secretary, the institution shows that students completing the program typically experience a significant increase in earnings after an initial employment period and the institution explains the basis for that earnings pattern. For each of the P3YP student completers, the institution is required to provide the Secretary with the following information; the program CIP code, the student's completion date, the amount of private educational loans that the student received, and the amount of debt incurred from institutional financing plans.

We estimate that 60 percent of the proprietary institutions would meet the loan repayment rate of 45 percent; therefore 40 percent of the 2,086 proprietary institutions with programs that prepare students for gainful employment or 834 institutions would have a loan repayment rate less than 45 percent. Under the proposed regulations, the debt measure as calculated by the Department would be used to determine if a program would be eligible and therefore unrestricted, or to what extent restrictions would apply. We estimate that 65.3 percent of the 834 institutions would pass the initial 3YP debt measure and therefore, 34.7 percent (.347 times 834 institutions equal 289 institutions) would not pass the initial 3YP debt measure. Of the remaining 289 institutions that would not pass the initial 3YP debt measure, 75 percent would pass the prior 3YP threshold of the annual loan repayment not exceeding 20 percent of discretionary income, or 8 percent of annual earnings. We estimate that for the explanation of the increase in earnings after the initial employment period and the submission of the P3YP information (to include for each student that completed the program: the CIP code of the program, the completion date, the amount of private educational loans, and the amount of debt incurred from institutional financing plans), to average 10 hours per proprietary institution for a total of 2,890 hours of burden in OMB 1845–NEW4.

We estimate that 89 percent of the private nonprofit institutions would meet the loan repayment rate of 45 percent; therefore 11 percent of the 238 private nonprofit institutions with programs that prepare students for gainful employment or 26 institutions would have a loan repayment rate less than 45 percent. Under the proposed regulations, the debt measure as calculated by the Department would be used to determine if a program would be eligible and unrestricted, or to what extent restrictions would apply. We estimate that 95 percent of the 26 private nonprofit institutions would pass the initial 3YP debt measure and therefore, 5 percent (.05 times 26 institutions equal 1 institution) would not pass the initial 3YP debt measure. Of the remaining 1 institution that would not pass the initial 3YP debt measure, we estimate that this institution would explain the increase in earnings after the initial employment

period and submit the alternative debt threshold data. We estimate that this institution would pass the P3YP threshold of the annual loan payment not exceeding 20 percent of discretionary income, or 8 percent of average annual earnings. We estimate that the submission of the explanation of increased earnings and the P3YP information (to include for each student that completed the program: The CIP code of the program, the completion date, the amount of private educational loans, and the amount of debt incurred from institutional financing plans), to average 10 hours per private nonprofit institution for a total of 10 hours of burden in OMB 1845–NEW4.

We estimate that 82 percent of the public institutions would meet the loan repayment rate of 45 percent; therefore 18 percent of the 2,139 public institutions with programs that prepare students for gainful employment or 385 institutions would have a loan repayment rate less than 45 percent and therefore the debt measure as calculated by the Department would be used to determine if a program would be eligible and unrestricted, or to what extent restrictions would apply. We estimate that 98 percent of the 385 public institutions would pass the initial 3YP debt measure and therefore, 2 percent (.02 times 385 institutions equal 8 institutions) would not pass the initial 3YP debt measure. Of the remaining 8 institutions that would not pass the initial 3YP debt measure, we estimate that virtually all would explain the increase in earnings beyond the initial employment period and submit the alternative debt threshold data. We estimate that 90 percent would pass the P3YP threshold of the annual loan payment not exceeding 20 percent of discretionary income, or 8 percent of average annual earnings. We estimate that the submission of the explanation of the increased earnings and the P3YP information (to include for each student that completed the program: The CIP code of the program, the completion date, the amount of private educational loans, and the amount of debt incurred from institutional financing plans), to average 10 hours per public institution for a total of 80 hours of burden in OMB 1845–NEW4.

Collectively, under proposed § 668.7(c)(3), we estimate the burden for institutions to explain the increase in earnings after the initial 3YP and the submission of data on students that completed the program during the P3YP would result in a burden of 2,980 hours.

Under proposed § 668.7(d), on or after July 1, 2012, unless the program has a loan repayment rate of at least 45 percent or an annual loan payment that is at least 20 percent of discretionary income or 8 percent of average annual income, the Department would notify the institution that it must include a prominent warning in its promotional, enrollment, registration, and other materials describing the program, including those on its Web site, designed and intended to alert prospective and currently enrolled students they may have difficulty repaying loans obtained for attending that program.

We estimate that 60 percent of the proprietary institutions would have a loan repayment rate of 45 percent or above and that 40 percent would not pass this rate (.4 times 2,086 equal 834 proprietary institutions that have programs that prepare students for gainful employment that would not pass this rate). We estimate that for the initial 3YP, that 65.3 percent of the remaining 834 proprietary institutions would meet or surpass the debt measures of at least 20 percent of discretionary income or at least 8 percent of average annual income. We estimate that the remaining 34.7 percent (.347 times 834 equal 289 proprietary institutions) would not pass the debt measures and therefore under the proposed regulations would be required to provide a debt warning disclosure. We estimate that it will take the affected 289 proprietary institutions, on average, 1 hour to meet these reporting requirements for their occupational training programs for a total estimated increase in burden of 289 hours in OMB 1845–NEW4.

We estimate that 89 percent of the private nonprofit institutions would have a loan repayment rate of 45 percent or above and that 11 percent would not pass this rate (.11 times 238 equal 26 private nonprofit institutions that have programs that prepare students for gainful employment that would not pass this rate). We estimate that for the initial 3YP, 95 percent of the remaining 26 private nonprofit institutions would meet or surpass the debt measures of at least 20 percent of discretionary income or at least 8 percent of average annual income. We estimate that the remaining 5 percent (.05 times 26 equal 1 private nonprofit institution) would not pass the debt measures and therefore under the proposed regulations would be required to provide a debt warning disclosure. We estimate that it will take the affected private non-profit institution, on average, 1 hour to meet these reporting requirements for its occupational training programs for a total estimated increase in burden of 1 hour in OMB 1845–NEW4.

We estimate that 82 percent of the public institutions would have a loan repayment rate of 45 percent or above and that 18 percent would not pass this rate (.18 times 2,139 equal 385 public institutions that have programs that prepare students for gainful employment that would not pass this rate). We estimate that for the initial 3YP, 98 percent of the remaining 385 public institutions would meet or surpass the debt measures of at least 20 percent of discretionary income or at least 8 percent of average annual earnings. We estimate that the remaining 2 percent (.02 times 385 equal 8 public institutions) would not pass the debt measures and therefore under the proposed regulations would be required to provide a debt warning disclosure. We estimate that it will take the affected 8 public institutions, on average, 1 hour to meet these reporting requirements for their occupational training programs for a total estimated increase in burden of 8 hours in OMB 1845–NEW4.

Collectively, under proposed § 668.7(d), we estimate that burden for institutions to meet these proposed disclosure requirements in accordance with procedures established by the Department would increase by 298 hours in OMB Control Number 1845–NEW4.

Under proposed § 668.7(e), a restricted program would be required to report to the Department additional information annually. The additional information would include documentation from employers not affiliated with the institution, affirming that the curriculum of the program aligns with recognized occupations at those employers' businesses. The number and locations of the businesses, as well as the number of projected job vacancies at those businesses must be commensurate with the anticipated size of the programs.

We estimate that 22.7 percent of the proprietary institutions will be subject to the proposed requirements of the restricted status (.227 times 2,086 proprietary institutions that have programs that prepare students for gainful employment equal 474 affected institutions). We estimate that on average, each institution would take 11 hours to obtain the independent employer affirmations as proposed for submission to the Department. These institutions would already be required to provide a debt warning disclosure, so there is no additional burden associated with that requirement in this section. Therefore, we estimate an increase in burden of 5,214 hours (474 affected

institutions times 11 hours equal 5,214 hours).

We estimate that 15 percent of the private nonprofit institutions will be subject to the proposed requirements of the restricted status (.15 times 238 private nonprofit institutions that have programs that prepare students for gainful employment equal 36 affected institutions). We estimate that on average, each institution would take 11 hours to obtain the independent employer affirmations as proposed for submission to the Department. These institutions would already be required to provide a debt warning disclosure, so there is no additional burden associated with that requirement in this section. Therefore, we estimate an increase in burden of 396 hours (36 affected institutions times 11 hours equal 396 hours).

We estimate that 11.8 percent of the public institutions will be subject to the proposed requirements of the restricted status (.118 times 2,139 public institutions that have programs that prepare students for gainful employment equal 252 affected institutions). We estimate that on average, each institution would take 13 hours to develop its five year enrollment projections and obtain the independent employer affirmations as proposed for submission to the Department. These institutions would already be required to provide a debt warning disclosure, so there is no additional burden associated with that requirement in this section. Therefore, we estimate an increase in burden of 2,772 hours (252 affected institutions times 11 hours equal 2,772 hours).

Collectively, under proposed § 668.7(e), we estimate that burden would increase by 8,382 hours in OMB 1845–NEW4.

Under proposed § 668.7(f), the Department would notify an institution whenever one or more of its programs become ineligible. During the initial year of implementation as proposed, for the award year beginning July 1, 2012, the number of ineligible programs would be limited to five percent. The Department estimates that there would be 3,000 programs in the ineligible category initially. Five percent of the 3,000 ineligible program or 450 programs would not be able to award title IV, HEA program assistance to new students after the notification date. The other 2,550 ineligible programs would be subject to additional reporting requirements including providing employer affirmations under § 668.7(g)(1)(iii) and providing the debt warning disclosures under § 668.7(d).

With respect to the 2,550 ineligible programs, the Department estimates that 65 percent or 1,658 of the ineligible programs would be at proprietary institutions. At an average of 11 hours to obtain and report employer affirmation per program, we estimate that burden would increase by 18,238 hours in OMB 1845–NEW4.

With respect to the 2,550 ineligible programs, the Department estimates that 65 percent or 1,658 of the ineligible programs would be at proprietary institutions. At an average of 11 hours to obtain and report employer affirmation per program, we estimate that burden would increase by 18,238 hours. At an average of 1 hour to place debt warning disclosure information in its promotional, enrollment, and other materials, including its Web site, we estimate that burden will increase by 1,658 hours in OMB 1845–NEW4. Collectively, the Department estimates that burden would increase for proprietary institutions by 19,896 hours in OMB 1845–NEW4.

With respect to the 2,550 ineligible programs, the Department estimates that 5 percent or 128 of the ineligible programs would be at private nonprofit institutions. At an average of 11 hours to obtain and report employer affirmation per program, we estimate that burden would increase by 1,408 hours. At an average of 1 hour to place debt warning disclosure information in its promotional, enrollment, and other materials, including its Web site, we estimate that burden will increase by 128 hours in OMB 1845–NEW4. Collectively, the Department estimates that burden would increase for private nonprofit institutions by 1,536 hours in OMB 1845–NEW4.

With respect to the 2,550 ineligible programs, the Department estimates that 30 percent or 764 of the ineligible programs would be at public institutions. At an average of 11 hours to obtain and report employer affirmation per program, we estimate that burden would increase by 8,404 hours. At an average of 1 hour to place debt warning disclosure information in its promotional, enrollment, and other materials, including its Web site, we estimate that burden will increase by 764 hours in OMB 1845–NEW4. Collectively, the Department estimates that burden would increase for public institutions by 9,168 hours in OMB 1845–NEW4.

In total, under proposed § 668.7(f), the Department estimates that burden would increase by 30,600 hours in OMB 1845–NEW4.

Under proposed § 668.7(g), before an institution can offer an additional program, the institution would have to apply to the Department by providing documentation of the approval of the substantive change by its accrediting agency, providing projected five year enrollment estimates, as well as, obtaining documentation from employers not affiliated with the institution, that the program curriculum aligns with recognized occupations at those employers' businesses, the number and locations of the businesses, and that the projected number of job vacancies are commensurate with the anticipated size of the program. We estimate that during the initial three year period there will be 650 submissions of additional programs for which institutions would submit to the Department this information. We estimate that, of the 4,463 institutions with programs that prepare student for gainful employment in a recognized occupation, 47 percent are in the proprietary sector, 5 percent are in the private nonprofit sector, and 48 percent are in the public sector.

We estimate that 47 percent of the 650 additional programs or 306 programs would be at proprietary institutions and that on average it will take 13 hours to develop the five-year projections and to collect the proposed employer documentation for a total increase of 3,978 hours of burden.

We estimate that 5 percent of the 650 additional programs or 32 programs would be at private nonprofit institutions and that on average it will take 13 hours to develop the five-year projections and to collect the proposed employer documentation for a total increase of 416 hours of burden.

We estimate that 48 percent of the 650 additional programs or 312 programs would be at public institutions and that on average it will take 13 hours to develop the five-year projections and to collect the proposed employer documentation for a total increase of 4,056 hours of burden.

Collectively, under § 668.7(g), we estimate that the increase in burden to institutions would be 8,450 hours in OMB Control 1845–NEW4.

COLLECTION OF INFORMATION

Regulatory section	Information collection	Collection
668.7(a)(3)(viii)	As proposed in § 668.7(a)(3)(viii), in accordance with procedures established by the Department for the purposes of calculating the loan repayment rate under paragraph (b) of this section, an institution must report the CIP codes for all students who attended a program at the institution whose FFEL or Direct Loan entered repayment in the prior four FFYs.	OMB 1845–NEW4. This collection would be a new collection. The burden increases by 40,666 hours.
668.7(c)(3)	The Department uses the current earnings of the student who completed the program during the prior 3-year period if, in accordance with procedures established by the Department, the institution shows that students completing the program typically experience a significant increase in earnings after an initial employment period. The institution also provides the information to the Department needed to calculate the annual debt measures under this section, including the CIP codes, the completion date, the amount received in private loans or institutional financing for attendance in the program and the amount of debt incurred from institutional financing plans for each graduate for the prior three-year period.	OMB 1845–NEW4. This collection would be a new collection. The burden increases by 2,980 hours.
668.7(d)	On or after July 1, 2012, if a program exceeds the debt threshold, the Department notifies the institution that it must include a prominent warning in its promotional, enrollment, registration, and other materials describing the program, including those on its Web site, designed and intended to alert prospective and currently enrolled students that they may have difficulty repaying loans obtained for attending that program.	OMB 1845–NEW4. This collection would be a new collection. The burden increases by 298 hours.
668.7(e)	Restricted programs as defined in proposed 668.7(e) are required annually to report employer affirmations specified in paragraph (g)(1)(iii) of this section.	OMB 1845–NEW4. This collection would be a new collection. The burden increases by 8,382 hours.
668.7(f)	On or after July 1, 2012 a program becomes ineligible if it does not meet at least one of the debt thresholds in § 668.7(a)(1). During the initial year, 95 percent of the ineligible programs may continue to participate in the title IV, HEA programs if the institution submits employer affirmations consistent with the requirements in proposed § 668.7(g)(1)(iii) and provides the debt warning disclosures in proposed § 668.7(d).	OMB 1845–NEW4. This collection would be a new collection. The burden increases by 30,600 hours.
668.7(g)	Before an institution offers an additional program that is subject to the requirements of this section, the institution must apply to the Department and also provide documentation of the approval of the substantive change by its accrediting agency, projected enrollment for the next five years for each location of the institution that will offer the additional program, and documentation from employers not affiliated with the institution affirming the curriculum of the additional program aligns with recognized occupations at those employers' businesses.	OMB 1845–NEW4. This collection would be a new collection. The burden increases by 8,450 hours.

If you want to comment on the proposed information collection requirements, please send your comments to the Office of Information and Regulatory Affairs, OMB, Attention: Desk Officer for U.S. Department of Education. Send these comments by e-mail to *OIRA_DOCKET@omb.eop.gov* or by fax to (202) 395–5806. You may also send a copy of these comments to the Department contact named in the **ADDRESSES** section of this preamble.

The Department and OMB will consider your comments on these proposed collections of information in—

- Deciding whether the proposed collections are necessary for the proper performance of its functions, including whether the information will have practical use;
- Evaluating the accuracy of its estimate of the burden of the proposed collections, including the validity of its methodology and assumptions;
- Enhancing the quality, usefulness, and clarity of the information it collects; and
- Minimizing the burden on those who must respond. This consideration includes exploring the use of appropriate automated, electronic, mechanical, or other technological collection techniques or other forms of information technology, *e.g.,* permitting electronic submission of responses.

OMB is required to make a decision concerning the collections of information contained in these proposed regulations between 30 and 60 days after publication of this document in the **Federal Register**. Therefore, to ensure that OMB gives your comments full consideration, OMB must receive the comments within 30 days of publication. This additional time to provide comments to OMB does not affect the deadline for your comments on the proposed regulations.

The Department notes that a federal agency cannot conduct or sponsor a collection of information unless it is approved by OMB under the PRA, and displays a currently valid OMB control number, and the public is not required to respond to a collection of information unless it displays a currently valid OMB control number. Also, notwithstanding any other provisions of law, no person shall be subject to penalty for failing to comply with a collection of information if the collection of information does not display a currently valid OMB control number. The Department will publish a notice at the final rulemaking stage announcing OMB's action regarding the collections of information contained in this proposed rule.

Intergovernmental Review

These programs are not subject to Executive Order 12372 and the regulations in 34 CFR part 79.

Assessment of Educational Impact

In accordance with section 411 of the General Education Provisions Act, 20 U.S.C. 1221e–4, the Secretary particularly requests comments on whether these proposed regulations would require transmission of information that any other agency or

authority of the United States gathers or makes available.

Electronic Access to This Document

You can view this document, as well as all other documents of this Department published in the **Federal Register**, in text or Adobe Portable Document Format (PDF) on the Internet at the following site: *http://www.ed.gov/news/fedregister.* To use PDF, you must have Adobe Acrobat Reader, which is available free at this site.

Note: The official version of this document is the document published in the **Federal Register.** Free Internet access to the official edition of the **Federal Register** and the Code of Federal Regulations is available on GPO Access at: *http://www.gpoaccess.gov/nara/index/html.*

(Catalog of Federal Domestic Assistance: 84.007 FSEOG; 84.032 Federal Family Education Loan Program; 84.033 Federal Work-Study Program; 84.037 Federal Perkins Loan Program; 84.063 Federal Pell Grant Program; 84.069 LEAP; 84.268 William D. Ford Federal Direct Loan Program; 84.376 ACG/SMART; 84.379 TEACH Grant Program)

List of Subjects in 34 CFR Part 668

Administrative practice and procedure, Aliens, Colleges and universities, Consumer protection, Grant programs—education, Loan programs-education, Reporting and recordkeeping requirements, Selective Service System, Student aid, Vocational education.

Dated: July 16, 2010.

Arne Duncan,

Secretary of Education.

For the reasons discussed in the preamble, the Secretary proposes to amend part 668 of title 34 of the Code of Federal Regulations as follows:

PART 668—STUDENT ASSISTANCE GENERAL PROVISIONS

1. The authority citation for part 668 continues to read as follows:

Authority: 20 U.S.C. 1001, 1002, 1003, 1070g, 1085, 1088, 1091, 1092, 1094, 1099c, and 1099c–1, unless otherwise noted.

2. Section 668.7 is added to subpart A to read as follows:

§ 668.7 Gainful employment in a recognized occupation.

(a) *Gainful employment*—(1) *Debt thresholds.* A program is considered to provide training that leads to gainful employment in a recognized occupation if, as calculated under paragraph (b) and (c) of this section—

(i) The program's annual loan repayment rate is at least 35 percent;

(ii) Using the three-year period (3YP), the program's annual loan payment is 30 percent or less of discretionary income or 12 percent or less of average annual earnings; or

(iii) Using the prior three-year period (P3YP), the program's annual loan payment is less than 20 percent of discretionary income or less than 8 percent of average annual earnings.

(2) *Restricted status.* Unless a program is ineligible under paragraph (f) of this section, the Secretary places the program on a restricted status under the following conditions—

(i) The program has an annual loan repayment rate of less than 45 percent; and

(ii) The program has an annual loan payment that is more than 20 percent of discretionary income and more than 8 percent of average annual income using 3YP, and if applicable P3YP.

(3) *General.* For purposes of this section—

(i) A *program* refers to any educational program offered by the institution under § 668.8(c)(3) or (d);

(ii) A *Federal fiscal year* (FFY) is the 12-month period starting October 1 and ending September 30;

(iii) A *three-year period* (3YP) is the period covering the three most recently completed award years prior to the earnings year;

(iv) A *prior three-year period (P3YP)* is the period covering the fourth, fifth, and sixth most recently completed award years prior to the earnings year (i.e., the three years preceding the 3YP);

(v) *Earnings year* is the most recent calendar year for which earnings data are available;

(vi) *Discretionary income* is the difference between average annual earnings and 150 percent of the most current Poverty Guideline for a single person in the continental U.S. The Poverty Guidelines are published annually by the U.S. Department of Health and Human Services (HHS) and are available at *http://aspe.hhs.gov/poverty;*

(vii) *The Classification of Instructional Programs (CIP)* is a taxonomy of instructional program classifications and descriptions developed by the U.S. Department of Education's National Center for Education Statistics; and

(viii) In accordance with procedures established by the Secretary for purposes of calculating the loan repayment rate under paragraph (b) of this section, an institution must report the CIP code for all students who attended a program at the institution whose FFEL or Direct Loans entered repayment in the prior four FFYs.

(b) *Loan repayment rate.* The Secretary calculates the loan repayment rate for a program annually using the following ratio:

$$\frac{\text{OOPB of LPF plus OOPB of RPL}}{\text{OOPB of all loans for students attending the program}}$$

(1) *Original Outstanding Principal Balance (OOPB).* (i) The OOPB is the amount of the outstanding balance on FFEL or Direct loans owed by students who attended the program, including capitalized interest, on the date those loans entered repayment.

(ii) The OOPB of all loans includes the FFEL and Direct loans that entered repayment for the prior four FFYs.

(2) *Loans Paid in Full (LPF).* (i) LPF are loans to students who attended the program that have been paid in full. However, a loan that is paid through a consolidation loan is not counted as paid in full for this purpose until the consolidation loan is paid in full.

(ii) The OOPB of LPF in the numerator of the ratio is the total amount of OOPB for these loans.

(3) *Reduced Principal Loan (RPL).* (i) RPL represents a loan where payments made by a borrower during the most recently completed FFY reduced the outstanding principal balance of that loan from the beginning of that FFY. RPL also includes loans for borrowers whose payments during that FFY qualify for the Public Service Loan Forgiveness program under 34 CFR 685.219(c), even if there is no reduction during the FFY in the outstanding principal balance of those loans.

(ii) The OOPB of RPL in the numerator of the ratio is the total amount of the OOPB for these loans.

(4) *Exclusions.* The following are excluded from both the numerator and the denominator of the ratio:

(i) The OOPB of borrowers on an in-school deferment or a military-related deferment status.

(ii) The OOPB of borrowers entering repayment after March 31 of the most recent FFY.

(c) *Debt measures*—(1) *General.* The Secretary determines annually for each program whether the annual loan payment is less than the discretionary income and earnings thresholds in paragraph (a) of this section using the following formulas:

(i) Annual loan payment < Discretionary threshold * (Average Annual Earnings – (1.5 * Poverty Guideline)). For example, under paragraph (a)(1)(ii) of this section, the Discretionary threshold is 20 percent or .20.

(ii) Annual loan payment < Earnings threshold * Average Annual Earnings. For example, under paragraph (a)(1)(iii) of this section the Earnings threshold is 12 percent or .12.

(2) *Annual loan payment.* The Secretary determines the median loan debt of students who completed the program at the institution during the 3YP and uses this amount to calculate an annual loan payment based on a 10-year repayment schedule and the current annual interest rate on Federal Direct Unsubsidized Loans. If data are available, the Secretary also calculates the median loan debt of students who completed the program during the P3YP. In general, loan debt includes title IV, HEA program loans, other than Parent PLUS loans, and any private educational loans or debt obligations arising from institutional financing plans. Loan debt does not include any debt obligations arising from student attendance at prior or subsequent institutions unless the other and current institutions are under common ownership or control, or are otherwise related entities.

(3) *Average annual earnings.* The Secretary uses the most currently available actual, average annual earnings obtained from a Federal agency, of the students who completed the program during the 3YP and, if the data are available, during the P3YP. P3YP data are used if, in accordance with procedures established by the Secretary—

(i) The institution shows that students completing the program typically experience a significant increase in earnings after an initial employment period and explains the basis for that earnings pattern; and

(ii) The institution provides the Secretary the information needed to calculate the annual debt measures under this section, including the CIP code, and for each student who completed the program, the completion date, the amount received from private educational loans, and the amount of debt incurred from institutional financing plans.

(d) *Debt warning disclosure.* On or after July 1, 2012, unless the program has a loan repayment rate of at least 45 percent and an annual loan payment that is at least 20 percent of discretionary income or 8 percent of average annual income, the Secretary notifies the institution that it must—

(1) Include a prominent warning in its promotional, enrollment, registration, and in all other materials, including those on its Web site, and in all admissions meetings with prospective students, that is designed and intended to alert prospective and currently enrolled students that they may have difficulty repaying loans obtained for attending that program; and

(2) Disclose to current and prospective students, the program's most recent loan repayment rate under paragraph (b) of this section, and most recent debt measures under paragraph (c) of this section.

(e) *Restricted programs.* The Secretary notifies an institution whenever one of its program's is placed on a restricted status under paragraph (a)(2) of this section, that—

(1) The institution must provide annually to the Secretary the employer affirmations specified in paragraph (g)(1)(iii) of this section;

(2) The institution must make the debt warning disclosures specified in paragraph (d) of this section; and

(3) The Secretary limits the enrollment of title IV, HEA program recipients in that program to the average number enrolled during the prior three award years.

(f) *Ineligible program*—(1) *General.* Except for the transition year under paragraph (f)(2) of this section, on or after July 1, 2012 a program becomes ineligible if it does not satisfy at least one of the debt thresholds in paragraph (a)(1) of this section. The Secretary notifies the institution that the program is ineligible on this basis, and the institution may not disburse any title IV, HEA program funds to students who begin attending that program after the date specified in the Secretary's notice. However, the institution may disburse title IV, HEA program funds to students who began attending the program before it became ineligible for the remainder of the award year and for the award year following the date of the Secretary's notice.

(2) *Transition year.* (i) For the award year beginning July 1, 2012, the Secretary caps the number of ineligible programs for which a notice is sent under paragraph (f)(1) of this section by—

(A) Sorting all programs subject to this section by category based solely on the credential awarded as determined by the Secretary (*e.g.,* certificate, associate degree, baccalaureate degree, and graduate and professional degree) and then within each category, by loan repayment rate, from lowest rate to highest rate; and

(B) For each category of programs, beginning with the ineligible program with the lowest loan repayment rate, identifying the ineligible programs that account for a combined number of students that completed the programs in the most recently completed award year that do not exceed five percent of the total number of students who completed programs in that category.

(ii) For each ineligible program that falls within the five percent grouping by category during the transition period, the Secretary notifies the institution under paragraph (f)(1) of this section that the program no longer qualifies as an eligible program. For every other ineligible program, the Secretary notifies the institution that—

(A) It must limit the enrollment of title IV, HEA program recipients in that program to the average number of title IV, HEA program recipients enrolled during the prior three award years;

(B) It must provide the employer affirmations under paragraph (g)(1)(iii) of this section; and

(C) It must provide the debt warning disclosures specified in paragraph (d) of this section.

(g) *Additional programs.* (1) Before an institution offers an additional program that is subject to the requirements of this section, the institution must apply to the Secretary under 34 CFR 600.10(c)(1) to have that program approved as an eligible program. As part of its application, the institution must provide—

(i) If the additional program constitutes a substantive change as provided under 34 CFR 602.22(a)(1), documentation of the approval of the substantive change by its accrediting agency;

(ii) Projected student enrollment for the next five years for each location of the institution that will offer the additional program; and

(iii) Documentation from employers not affiliated with the institution affirming that the curriculum of the additional program aligns with recognized occupations at those employers' businesses, and that there are projected job vacancies or expected demand for those occupations at those businesses. The number and locations of

the businesses for which affirmation is required must be commensurate with the anticipated size of the program.

(2) In determining whether to approve the additional program, the Secretary may restrict the approval for an initial period based on the projected growth estimates provided by the institution and the demonstrated ability of the institution to offer programs subject to this section.

(3) If the additional program constitutes a substantive change based solely on program content as provided in 34 CFR 602.22(a)(2)(iii), the Secretary calculates the loan repayment rate and debt measures for that program as soon as data are available. Otherwise, the Secretary—

(i) Calculates the loan repayment rate under paragraph (b) of this section by using loan data from the additional program and, for the first three years, loan data from all other programs currently or previously offered by the institution that are in the same job family as the additional program. Any loans from the programs in the same job family that enter repayment after the third year that the loan repayment rate is calculated for the additional program, are not included in that program's loan repayment rate. As described by the Bureau of Labor Statistics (BLS), a job family is a group of occupations based on work performed, skills, education, training, and credentials. Occupations are grouped by Standard Occupational Classification (SOC) codes. Information about job families and SOC codes is available at *http://www.bls.gov/oes/current/oes_stru.htm,* or *http://online.onetcenter.org/find/family;* and

(ii) Calculates the debt measures under paragraph (c) of this section by using the loan debt incurred by students in the additional program and in all other programs currently or previously offered by the institution that are in the same job family as the additional program, until loan debt data are available for a 3YP solely for the additional program.

(Approved by the Office of Management and Budget under control number 1845–NEW4)

(Authority: 20 U.S.C 1001(b), 1002(b) and (c))

3. Section 668.13 is amended by:

A. In paragraph (c)(1)(i)(D), removing the word "or" that appears after the punctuation ";".

B. In paragraph (c)(1)(i)(E), removing the punctuation "." and adding, in its place, the word "; or".

C. Adding a new paragraph (c)(1)(i)(F).

The addition reads as follows:

§ 668.13 Certification procedures.

* * * * *

(c) * * *

(1)(i) * * *

(F) One or more programs offered by the institution—

(*1*) Are subject to the eligibility limitations under the gainful employment provisions in § 668.7(e); or

(*2*) Become ineligible under the gainful employment provisions in § 668.7(f).

* * * * *

4. Section § 668.90 is amended by:

A. In paragraph (a)(3)(v), removing the word "and" that appears after the punctuation";".

B. In paragraph (a)(3)(vi)(F), removing the punctuation "." and adding, in its place, the word "; and".

C. Adding a new paragraph (a)(3)(vii).

The addition reads as follows:

§ 668.90 Initial and final decisions.

(a) * * *

(3) * * *

(vii) In a termination action against a program based on the grounds that the program does not meet the standards for gainful employment in § 668.7(a), the hearing official accepts as accurate the average annual earnings calculated by another Federal agency, so long as the other Federal agency provided that calculation for the list of program completers identified by the institution and accepted by the Department. The hearing official may consider evidence from an institution about earnings from its graduates to establish a different amount for the average annual earnings of the program graduates, so long as that information is for the same individuals and determined to be reliable.

* * * * *

Note: The following appendix will not appear in the Code of Federal Regulations.

Appendix A—Regulatory Impact Analysis

BILLING CODE 400–01–P

Introduction

The Secretary intends to establish by regulation a definition of gainful employment in a recognized occupation by establishing what we consider, for purposes of meeting the requirements of section 102 of the Higher Education Act of 1965, as amended (HEA), to be a reasonable relationship between the loan debt incurred by students in a training program and income from employment after the training. The proposed regulation will clarify, for purposes of establishing a student's eligibility to receive title IV funds, a program's eligibility based on providing training that leads to gainful employment in a recognized occupation. Under the notice of proposed rulemaking published by the Secretary on June 18, 2010, institutions that offer programs that lead to gainful employment will submit information to identify the students attending those programs. The Secretary will require institutions that wish to offer new programs to demonstrate a corresponding interest from employers, while those that offer existing programs will have to meet outcome requirements based on the loan repayment rates of former students, and debt thresholds comparing educational debt to the average incomes of students that complete the program. An institution must provide a warning to students and prospective students if an eligible program does not pass all of the gainful employment tests. The regulation will benefit students by reducing the number of programs that burden individuals with high debt-to-income ratios and focusing programs on generating returns for students. The regulation will benefit taxpayers by reducing the number of programs with students delaying and defaulting on loan repayment. In some cases, programs may lose title IV eligibility.

For-profit postsecondary education along with occupationally specific training at other institutions has long played an important role in the nation's system of postsecondary education. Many of the institutions offering these programs have recently pioneered new approaches to enrolling, teaching, and graduating students. In recent years, enrollment has grown rapidly to 1.8 million, nearly tripling between 2000 and 2008. This trend is promising and supports President Obama's goal of leading the world in the percentage of college graduates by 2020. This goal cannot be achieved without a healthy and productive for-profit sector of higher education. However, the programs offered by the for-profit sector must lead to measurable outcomes, or those programs will devalue postsecondary credentials through oversupply. The Government Accountability Office (GAO) has noted this very real problem in work done in the 1990's. Indeed, GAO found that occupation-specific training program that lacked a general education component made graduates of for-profit institutions less versatile and limited their opportunities for employment beyond their field. GAO also found that there were labor supply oversupplies by compare job openings expected with the corresponding number of postsecondary graduates who completed training programs. Oversupply in the labor market results in a decline in real wages and

generally impacts recent graduates most negatively and impacts their ability to repay their student loans.

The Department of Education Organization Act gives the Secretary broad responsibility to impose such regulatory requirements as are necessary for the appropriate administration of the Department and the programs that the Secretary is responsible for implementing. More specifically, the HEAgives the Secretary with the responsibility of ensuring that institutions of higher education, including for-profit institutions, meet minimum standards if they choose to participate in the federal student aid programs. Many of these institutions derive most of their income from the HEA title IV student financial aid. In 2009, the five largest for-profit institutions received 77 percent of their revenue from Federal student aid, a figure that does not include revenue received from certain Federal student loans, veterans' benefits, job training programs, and State financial aid. A recent study completed for the Florida legislature concluded that for-profit institutions were more expensive for taxpayers on a per-student basis due to their high costs and large subsidies.

The standards for institutions participating in the HEA title IV student financial aid programs are important to protect taxpayers against wasting resources on educational programs of little or no value that also lead to high indebtedness for students. The proposed standards also protect students who lack the information needed to evaluate their postsecondary education options and may be mislead by skillful marketing, resulting in significant student loan debts without meaningful career opportunities. Unlike publically controlled or non-profit institutions – for-profit institutions are legally obligated to make their profitability for shareholders their overriding objective. Furthermore, for-profit institutions and may be subject to less oversight by States and other entities.

There are reasons for concern that some students attending for-profit institutions have not been well served. Student loan debt is higher among graduates of for-profit institutions. For example, the median debt of a graduate of a two-year for-profit institution is $14,000, while most students at community colleges have no student loan debt. There are 18 title IV, HEA loan defaults for every 100 graduates of for-profit institutions, compared to only 5 title IV, HEA loan defaults for every 100 graduates of public institutions. Investigations and news reports have also produced anecdotal evidence of low-quality programs that leave students with large debts and poor prospects for employment. Despite these concerns, these institutions and suspect programs have never been required to substantiate their claim that they meet the statutory requirement of preparing students for "gainful employment."

The Department proposes to allow programs to demonstrate that they provide gainful employment under either of two tests, one based upon debt-to-income ratios and the other based upon repayment rates. Under these proposed regulations, the Department would assess whether a program provides training that leads to gainful employment by applying two tests: one test based upon debt-to-income ratios and the other test based upon repayment rates. Based on the program's performance under these tests, the program may be eligible, have restricted eligibility, or be ineligible. A program that meets both of these tests, or whose debt-to-income ratio is very low, would continue to be eligible for title IV, HEA program funds without restrictions, while a program that does not meet any of the tests would become ineligible. A program that meets only one of the tests would be placed in a restricted eligibility status, unless it has a high repayment rate.

Under certain circumstances, the proposed regulations would also require an institution to disclose the test results and alert current and prospective students that they may difficulty repaying their loans.

This proposed use of two measures is a balanced approach that gives institutions flexibility in how to demonstrate that they prepare students for gainful employment. The debt-to-income ratio provides a measure of program completers' ability to repay their loans, and the proposed targets were set based upon industry practices and expert recommendations. The use of discretionary income would recognize that borrowers with higher incomes can afford to devote a larger share of their income to loan repayments, while the use of annual income would benefit programs whose borrowers have lower earnings.

Under the debt-to-income test, programs whose completers typically have annual debt service payments that are 8 percent or less of average annual earnings or 20 percent or less of discretionary income would continue to qualify, without restrictions, for title IV, HEA program funds. Programs whose completers typically face annual debt service payments that exceed 12 percent of average annual earnings and 30 percent of discretionary income may become ineligible.

Debt service rates have a connection to whether borrowers will default on their loans. Borrowers with rates above the 8 percent threshold, for example, have a default rate of 10.2 percent, compared to a rate of 5.4 percent for those below the threshold.[5] Borrowers with debt rates above the 12 percent threshold, for example, have a default rate of 10.9 percent.[6]

The repayment rate is a measure of whether program enrollees are repaying their loans, regardless of whether they completed the program. This measure would provide some assurance to programs that may have high debt-to-income ratios for completers but enroll prepared and responsible students who understand their financial obligations. Programs whose former students have a loan repayment of at least 45 percent will continue to be eligible. Programs whose former students have loan repayment rates below 45 percent but at least 35 percent may be placed on restricted status. Programs whose former students have loan repayment rates below 35 percent may become ineligible.

A program that does not satisfy either the debt-to-inocme ratio or the 45 percent rate but has a loan repayment rate of at least 35 percent would be subject to restrictions and additional oversight by the Department.

The proposed regulations also would require an institution whose program does not have a loan repayment rate of at least 45 percent and an annual loan payment that is either 20 percent or less of discretionary income or 8 percent or less of average annual income, to alert current and prospective students that they may have difficulty repaying their loans.

---

[5] *Source:* U.S. Department of Education, National Center for Education Statistics, B&B:93/03 Baccalaureate and Beyond Longitudinal Study.

[6] *Source:* U.S. Department of Education, National Center for Education Statistics, B&B:93/03 Baccalaureate and Beyond Longitudinal Study.

Background

1. Growth in Student Loan Debt

Student debt is more prevalent and individual borrowers are incurring more debt than ever before. Twenty years ago, only one in six full-time freshmen at four-year public colleges and universities took out a Federal student loan; now more than half do. Today, nearly two-thirds of all graduating college seniors carry student loan debt, up from less than one-half a generation ago.

In prior generations, most graduates repaid their loans within ten years of completing college. Among bachelor's degree recipients in 1992-93 who had student loan debt, about three-fourths fully repaid their loans in less than ten years. Those reporting higher incomes were most likely to have repaid their loans (even though they had higher average debt), indicating that earnings did play a role in their ability – or at least their willingness – to repay.[7] For many adults, paying off student loans is an important milestone as many borrowers see a tradeoff between making student loan payments and other important investments such as saving for retirement, buying a home, or saving for their own children's education.[8] The Federal Government provides significant options for repaying loans over long periods of time in order to protect a portion of the borrower population from the adverse impact of nonpayment (addressing the risks that earnings will not be as hoped, for example), but they are not intended to be the norm.

For all types of credentials, debt is growing in a way that will cause more students to put more of their future income toward repayment, whether through larger or longer payments:

Bachelor's Degree Recipients. Between 2000 and 2008, while inflation-adjusted earnings for Bachelor's degree recipients have declined, median debt levels per bachelor's degree recipient have grown (see graph below).

---

[7] 74 percent had repaid their loans when they were interviewed in 2003. Those with lower incomes were most likely to have debt remaining (33 percent) even though they had borrowed less on average. National Center for Education Statistics 2006-156, June 2006, http://nces.ed.gov/das/epubs/2006156/es_03.asp.

[8] See for example, http://www.moolanomy.com/782/retirement-savings-versus-student-loans/, "Prioritizing retirement savings against paying down student loans is a very common money management question for young workers today. This wasn't the case in prior generations where college graduates start their first job with less student loans and were offered pension as part of their benefits package." Surveys confirm the perception that student loan debt affects home buying, for example, but regressions do not necessarily confirm the effect. *Life After Debt*, Nellie Mae, February 1998: http://www.nelliemae.com/pdf/NASLS.pdf.

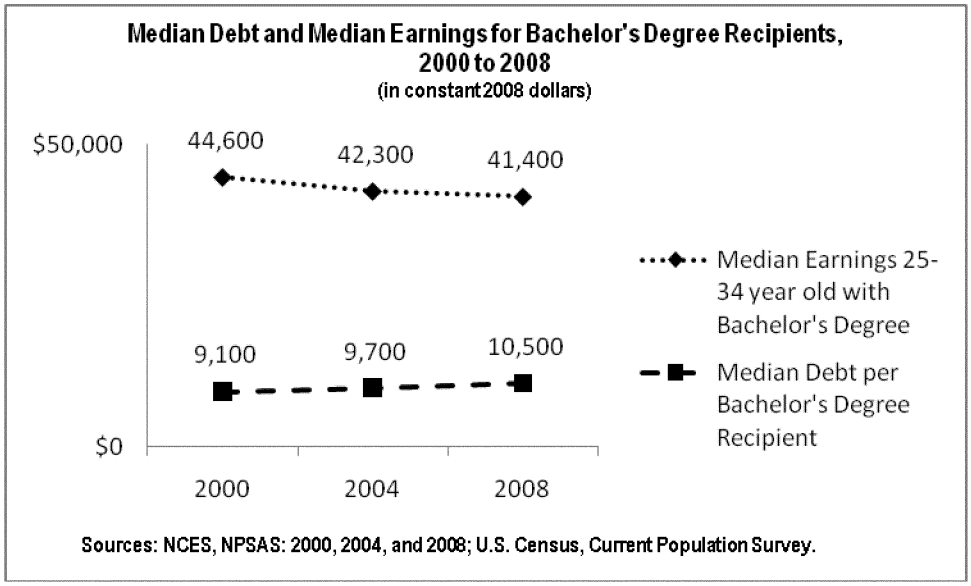

In 2008 the median earnings for an individual age 25-34 with a bachelor's degree, working full-time for the full year, was $41,445. At that income level, student loan debt of $30,000 is considered high.[9] In 1999-2000, 14 percent of bachelor's degree recipients had $30,000 or more in debt (adjusted for inflation). By 2007-08, that proportion had grown to 18 percent.

Associate's Degree Recipients. Growth in debt levels is not limited to students pursuing Bachelor's degrees. Less than half of students who earned an associate's degree in 2008 borrowed for their education, so the median amount of debt per graduate remains at $0. However, there has still been growth. In 2000, 36 percent of associate's degree recipients borrowed a median of $9,100 (inflation adjusted). By 2008, 47 percent had a median debt level of $10,000. Over the same period of time, median earnings for 25-34 year olds with an associate's degree decreased from 34,900 to 31,800 after adjusting for inflation.

Certificate Recipients. Similarly, there has been growth in debt levels among students pursuing undergraduate certificates. In 2000, the median debt level per certificate recipients was $0. By 2008 it was $4,800. The proportion of certificate completers with debt increased from 46 percent in 2000 to 63 percent in 2008.

Noncompleters. Debt is not only an issue for those who earn a degree, but also those who borrow but fail to meet their degree goals. Failure to complete one's academic program is considered one of the strongest predictors of default among student types. Unfortunately, institutional retention of students is a problem for many postsecondary institutions.

2. Consequences

[9] Experts consider the outer boundary of manageable student loan payments (amortized over ten years) to be 20 percent of discretionary income (150 percent of the poverty level). Sandy Baum and Saul Schwartz, *How Much Debt Is Too Much, College Board*, 2005. An income of $41,445, assuming an interest rate of 6.8 percent, would yield a outer boundary of $36,496 in loans. Using the 15 percent metric adopted for the Income-Based Repayment program yields a maximum manageable debt of $27,372.

All other things being equal, any former students would be better off leaving college without debt. The less debt, the more they are able to devote to buying a home, saving for retirement or for their children's education, or serving the community. Student loan debt is worth having if it makes it possible to gain the education and training that enhances productivity as a citizen, civic leader, worker or entrepreneur. To the extent that the student loan debt brings little or no benefit to the students (or to society), it is a cost that public policy should attempt to minimize or eliminate. It is in this context that the requirement that a program of study must lead to "gainful employment" can best be understood.

This "cost" of excess student debt manifests in three significant ways: payment burdens on the borrower; subsidies from taxpayers; and the negative consequences of default (which falls on the borrowers and taxpayers). First is as already described: loans that outweigh the benefits of the education and training are an inefficient use of the borrower's resources. To the extent that a consumer makes that choice fully informed and using his or her own funds, it is not a matter for public policy. But to the extent that the availability of Federal aid makes it more likely for an individual to be willing to enroll at an institution of higher education, it is appropriate for the Federal Government to consider ways to reduce or eliminate waste in terms of training that does not provide a net benefit to the student or society, even if the borrower would fully repay the loans.

The second type of cost shows up as taxpayer subsidies. When a borrower is unemployed or in poverty, the Government covers interest on subsidized Stafford and Perkins loans. For example, three years of deferment costs the Government up to 20 percent of the value of the loan. Also, borrowers who are low income relative to their debt may reduce their payments through income-based or income-contingent repayment programs. While for many borrowers this extends repayment at little or no cost to the Government, for other borrowers the taxpayer cost could be as much as the full amount of the loan with interest. Deferments and repayment options are important protections for borrowers: while education brings higher earnings on average, there is no guarantee for the individual. Policies that assist those with high debt burdens are a critical form of insurance: they tell Americans to go ahead and get an education despite the existence of the potential risk in their future. However, the existence of these policies does not mean that it is appropriate for providers to increase the level of downside risk – just as the existence of homeowners insurance doesn't mean builders should make houses more flammable. The insurance is important but it should not become a license for providing a bad product to the consumer or hurt taxpayers.

The third cost is default cost. While the Government covers the cost of defaults on Federal student loans ($9.2 billion in fiscal year 2009), ultimately the cost of defaults is mitigated by the Department's success in collection using such tools as wage garnishment, Federal and State tax refund seizure, seizure of any other Federal payment, and Federal court actions. As a result, the projected taxpayer cost of defaults is less than one percent of the total annual amount of loans. Nonetheless, these costs can be significant. Based on historical collections, the net present value cost of the $9.2 billion of loans that defaulted in fiscal year 2009 is estimated at less than $1 billion.

An additional cost of default is the damage to the former student and his or her family and community. Former students who default on Federal loans are denied any further access to title IV aid for postsecondary education. Their credit rating is destroyed, undermining their ability to rent a house, get a mortgage, or purchase a car. To the extent they can get credit, they pay much higher interest. In some States, they may be denied certain occupational licenses. And, increasingly,

employers are considering credit records in their hiring decisions.[10] Furthermore, particularly for former students from disadvantaged neighborhoods, their default sends an unfortunate message to others that seeking an education can have disastrous results.

3. Debt, default and repayment by sector and credential type

As previously mentioned, student debt levels have increased at all types of institutions and programs, as Tables A-1 and A-2 indicate. For certificate, associate's degree, and bachelor's degree programs, debt levels are highest at for-profit institutions. For graduate and professional programs, separate data are not available on for-profit colleges. For professional degrees, the known debt levels at public and nonprofit institutions could be problematic if earnings are not sufficient. Table A-1 provides median debt levels; Table A-2 shows average debt levels.

Table A-1: 2003-04 and 2007-08: Median Federal debt (including nonborrowers) and median total debt (including nonborrowers) for completers of programs

	2003-04		2007-08	
	Federal	**Total**	**Federal**	**Total**
	Median debt	Median debt	Median debt	Median debt
Undergraduate Certificate				
Total	1,082	1,800	3,273	4,793
Public	0	0	0	0
Private NFP	0	0	0	*
For-profit	4,810	5,846	7,145	8,770
Associate's				
Total	0	0	0	0
Public	0	0	0	0
Private NFP	6,625	7,312	7,125	10,000
For-profit	12,103	14,000	14,045	18,415
Bachelor's				
Total	6,089	8,917	6,875	10,500
Public	4,848	6,087	4,968	6,998
Private NFP	10,650	13,250	11,580	16,175
For-profit	20,567	21,000	23,874	31,157
Master's				
Total	0	4,500	0	7,937
Public	0	0	0	0
Private NFP	12,479	14,848	4,250	9,985

[10] According to the Society for Human Resource Management, 60% of employers consider credit information for some or all of job applicants. http://www.shrm.org/Advocacy/GovernmentAffairsNews/HRIssuesUpdatee-Newsletter/Pages/051410_5.aspx

For-profit	*	*	*	*
Doctoral				
Total	0	0	0	0
Public	0	0	0	0
Private NFP	*	10,000	0	17,000
For-profit	*	*	*	*
First-professional				
Total	55,246	60,425	57,500	67,833
Public	52,322	53,976	57,010	58,568
Private NFP	55,500	70,000	57,500	78,970
For-profit	*	*	*	*
Graduate certificate				
Total	0	800*	0	1,833
Public	0	0	0	0
Private NFP	10,500	17,500	0	8,568
For-profit	*	*	*	*

*Reporting standards not met.

Note: Totals do not include students who attended multiple institutions in given year.

Table A-2: 2003-04 and 2007-08: Average Federal debt (including nonborrowers) and average total debt (including nonborrowers) for completers of programs

	2003-04		2007-08	
	Federal	Total	Federal	Total
	Average debt	Average debt	Average debt	Average debt
Undergraduate Certificate				
Total	3,175	4,024	5,083	7,054
Public	1,183	1,527	2292	2,906
Private NFP	1,670	2,505	5145	7,498
For-profit	5,117	6,430	7317	10,343
Associate's				
Total	2,896	3,673	4,702	6,233
Public	1,995	2,618	3,037	3,917
Private NFP	7,938	9,652	9,526	13,803
For-profit	11,390	13,587	14,233	19,273
Bachelor's				
Total	9,991	12,024	10,960	15,120
Public	8,878	10,285	9,572	12,321
Private NFP	11,821	15,215	12,495	19,437
For-profit	19,234	22,252	24,314	31,678
Master's				
Total	12,457	14,390	14,774	17,131
Public	8,633	9,897	12,037	13,645
Private NFP	15,933	18,818	16,414	19,567
For-profit	18,128	18,428	23,550	26,586
Doctoral				
Total	20,384	23,680	22,400	26,484
Public	15,774	17,560	15,332	18,729
Private NFP	28,396	33,877	34,702	40,357
For-profit	*	*	*	*
First-professional				
Total	53,825	66,163	63,092	74,951
Public	52,791	58,366	59,128	65,652
Private NFP	54,697	72,740	65,736	81,152
For-profit	*	*	*	*
Graduate certificate				
Total	6,852	8,975	11,498	14,119

Public	2,596	3,146	9,661	12,144
Private NFP	12,452	16,644	14,313	17,145
For-profit	*	*	*	*

*Reporting standards not met.

Note: Totals do not include students who attended multiple institutions in given year.

Beyond the averages, while there have long been some students who borrow significantly more than the average, high debt is no longer just an outlier phenomenon. In 2007-08:[11]

- 13 percent of baccalaureate recipients from public four-year institutions carried at least $30,000 of Federal and private student loan debt. Among graduates of private nonprofit colleges, one-fourth had student debts that high. And at for-profit institutions, 57 percent of the baccalaureate recipients carried student loan debts of $30,000 or more.

- At the associate's degree level, only about five percent of public college graduates have debt of $20,000 or more, while 42 percent of for-profit graduates have debt that high.

- In terms of certificate recipients, fewer than two percent at public institutions and 11 percent at for-profit institutions have debt of at least $20,000.

High levels of debt at any institution are less likely to be a burden to the borrower or a cost to taxpayers if the borrower's postgraduate income is relatively high. While not a direct measure of income, defaults on Federal loans are an indicator of borrower distress. That distress may be the result of a borrower not being employed, having inadequate income, feeling they were rushed into a loan without adequate information, or dissatisfaction with the quality or type of education that was provided. Student-level data indicate that high debt burden is related to higher likelihood of default (see Chart A).[12]

[11] National Postsecondary Student Aid Survey, as reported in Trends in Student Aid 2009, College Board.

[12] U.S. Department of Education, National Center for Education Statistics, B&B:93/03 Baccalaureate and Beyond Longitudinal Study. The crooked line is the actual, while the straight line is the trend line.

Chart A

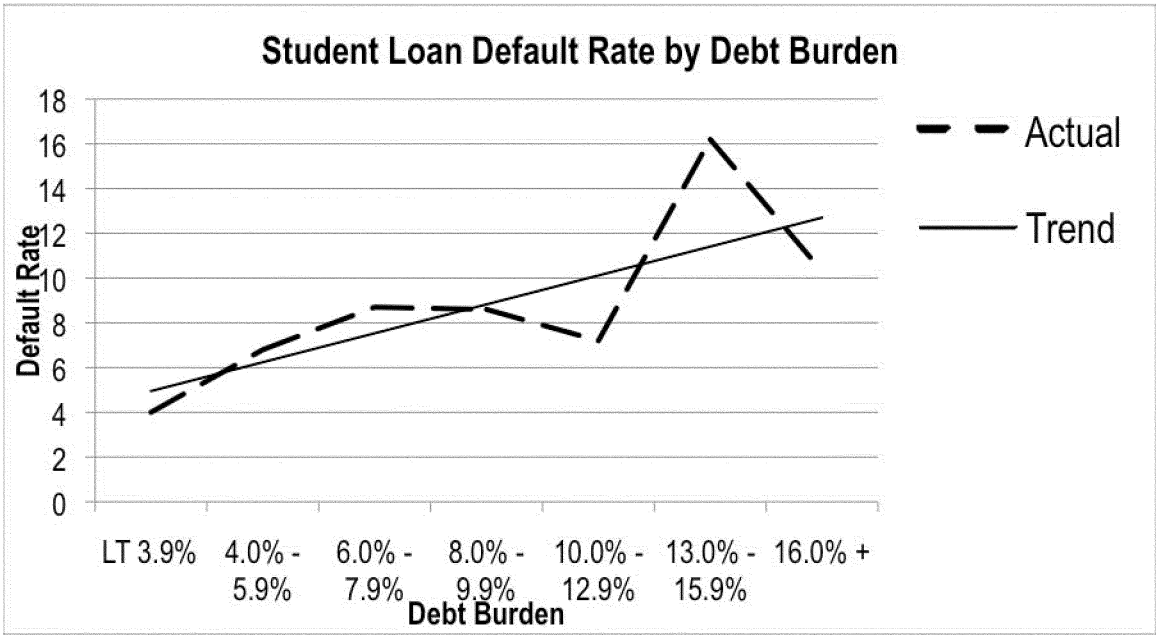

While high defaults are likely an indicator of high debt burdens, it is not necessarily the case that *low* defaults indicate *low* debt burden. Some colleges work hard to keep default rates down by helping former students use such benefits as forbearance, economic hardship deferments, and income-contingent and income-based repayment. While these options are important protections for borrowers, they mean that lower defaults may simply be a sign of an institution's successful default management but are not a sign that borrowers have adequate income to repay their loans.[13]

Average cohort default rates (both two-year and three-year) are substantially higher at for-profit institutions, suggesting much higher levels of borrower distress, likely related in part to higher debt burdens.

One way to assess whether the defaults associated with an institution or a sector are "too high" is to balance them against the intended positive outcomes: degrees and certificates. Using that approach, there has been an increase in defaults overall compared to the number of credentials produced. For every 100 students who graduated from a title IV institution in 2003-04,

[13] One researcher has indicated that a nonrandom sample of for-profit institutions yielded data suggesting that programs with higher debt burdens had lower default rates. While more reliable data do not support this general finding, it is certainly possible that some institutions – because of strong default management practices – have low cohort default rates despite their former students having lower earnings and/or higher debt.

there were 3.5 former students who entered repayment in FY 2004 and defaulted the next year. That ratio has grown significantly since then, reaching 6.3 for 2008.[14]

Table B: 2003 through 2008: Comparison of Defaults to Awards

Year	Defaulters	Awards	Ratio
2003	115,568	3,295,878	3.5%
2004	144,128	3,476,732	4.1%
2005	161,951	3,595,928	4.5%
2006	204,507	3,690,124	5.5%
2007	225,371	3,775,835	6.0%
2008	244,997	3,883,697	6.3%

These increases are much more pronounced in the for-profit sector than in the public and nonprofit sectors, and they are occurring at all three types of for-profit institutions (four-year and above, two-year, and less-than-two-year). For every 100 students who graduated from a public or private institution in 2007-08, there were *four* former students of those institutions who entered repayment in 2008 and defaulted the next year (See Chart B). For every 100 students who earned a degree or certificate from a for-profit institution in 2007-8, there were *18* who defaulted the very next year.

Chart B

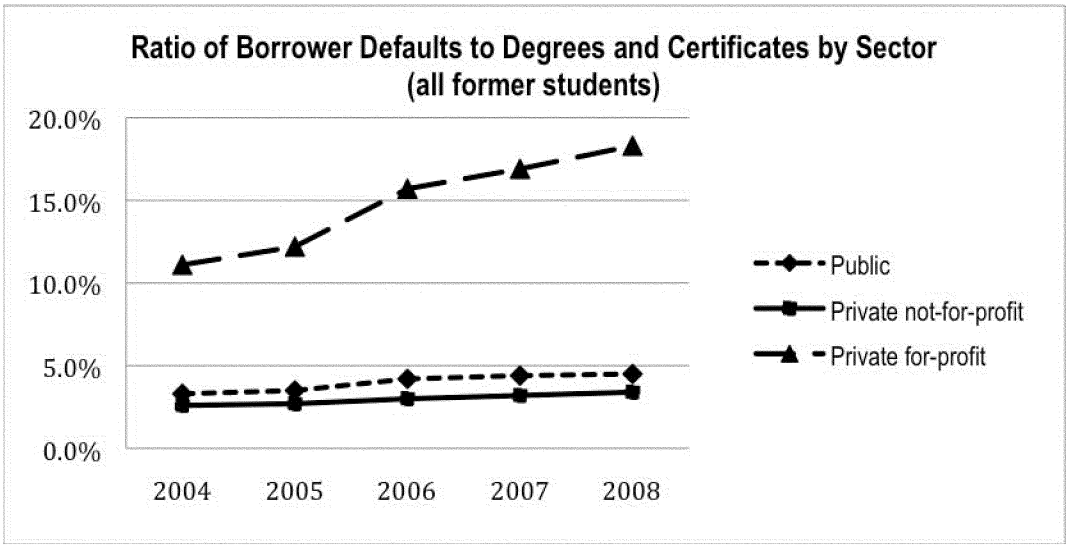

[14] The table shows the number of credentials awarded in the award year (2003 is the 2002-03 award year) as reported to NCES's Integrated Postsecondary Education Data System (IPEDS), and the number of borrowers entering repayment in the fiscal year indicated and defaulting in the following fiscal year (standard two-year cohort default rate analysis).

Data from NCES's IPEDS system and FSA's loan default database indicate that the increases are occurring at for-profit two-year and certificate-granting colleges, but the numbers are particularly high at the four-year for-profit colleges where there are 25 new defaulters for every 100 new degrees (See Chart C). The high default rate in for-profit programs appears to indicate substantial barriers to providing value to enrollees, beyond what could be explained by informed investment on the part of students.

Chart C

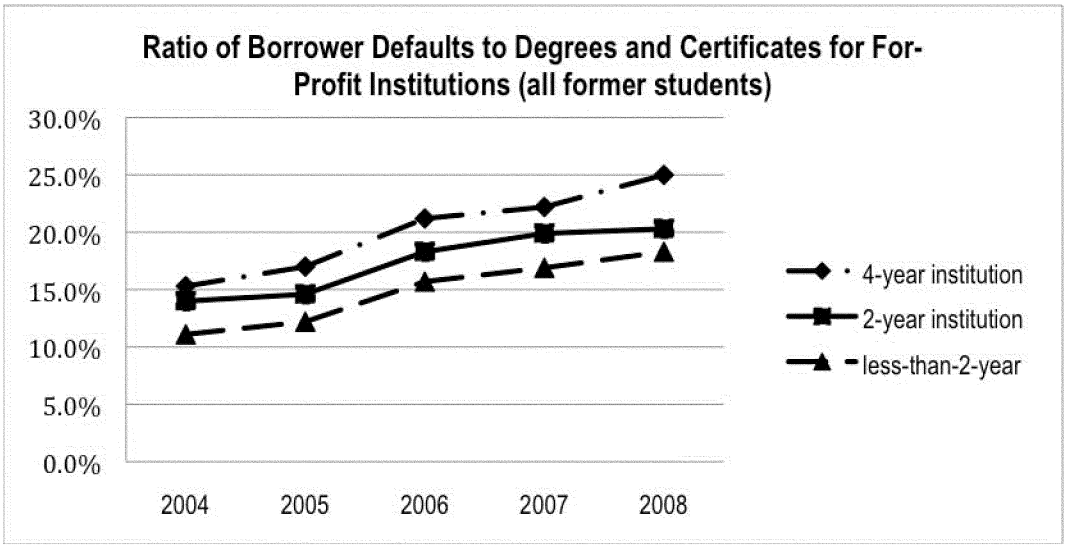

Not all for-profit colleges have disturbingly high default-completion ratios, and not all public and nonprofit colleges have low ratios. Of the 1,378 institutions with ratios below one percent (2005-07 combined), more than a third are for-profit. And of the 258 institutions with ratios of 25 percent or above, about a third are public and nonprofit institutions.

Analyses of loan repayment—whether borrowers are making actual payments on their loans after leaving school—show the same types of differences by sector. On average, 80 percent of recent borrowers from public institutions and 88 percent from nonprofit institutions paid at least a penny more than interest on their loans since FY 2006 in FY 2009, compared to 55 percent at for-profit institutions. About 89 percent of public and nonprofit four-year institutions and 73 percent of public two-year institutions have loan repayment rates of at least 35 percent, compared to less than 60 percent of for-profit institutions. [15]

4. Accountability for debt difficulty

Representatives of high-default institutions sometimes dismiss high default rates as an inevitable outcome of enrolling certain types of students. While for-profit institutions do tend to enroll a larger proportion of low-income students than do other institutions on average, the industry's own report found that only about half of the difference in defaults could be explained by student characteristics. This circumstance overstates the role of socioeconomic factors since the analysis considered persistence and completion to be a "student characteristic" rather than a variable that can be influenced by the institution.[16]

---

[15] This analysis was performed in the manner described for the repayment rate in the NPRM.

[16] Jonathan Guryan and Matthew Thompson, "Report on Gainful Employment: Executive Summary," Charles River Associates for the Career College Association, April 2, 2010. The notes beneath Figure 7 indicate controls for race, gender, persistence and completion, Pell Grant receipt, family AFDC receipt, income, and dependency status.

While there are undoubtedly student and family factors that contribute to defaults, institutions are not neutral actors: they have a responsibility to recruit and enroll students who can succeed at their institutions, and to help them reach that goal. That responsibility is greater for students with loans, since students who do not get a degree are much more likely to default on their loans than those do.[17] Judge Richard Posner suggests that some colleges may target vulnerable, low-income consumers as a strategy despite the fact that they are unlikely to persist:

> "There is evidence that just as in the case of the marketing of mortgage loans during the housing bubble of the early 2000s, the for-profit colleges use aggressive advertising to attract students from low-income families that lack financial sophistication and the ability to evaluate the benefits of attending a for-profit college. These people—who may be the only people who would consider a for-profit college, because no other college would admit them—almost by definition have little information about higher education and are therefore prey to skillful marketing that even if literally truthful may create a misleading impression of the benefits of attendance at a for-profit college."[18]

The high debt levels and default rates in these programs provides strong evidence that they often do not provide beneficial returns on investment for students. Combined with the aforementioned evidence regarding adverse actions by institutions, this suggests that individuals may not be fully informed or aware of the implications of entering into these loan contracts, motivating regulations for consumer protection.

For-profit colleges have a particularly high rate of students who left their program without a degree and did not transfer to another institution (34 percent of students who left three years after entering a for-profit college compared to 10-11 percent of students who left three years after entering public and nonprofit institutions). For two-year colleges, the student retention rates are better at for-profit institutions than at the public institutions (27 percent compared to 34 percent).

Table C: Status 3 Years after Initial Enrollment in Postsecondary Education by Type of Institutions Initially Attended

	Completed or Still Enrolled	Transferred to Another Institution	Left Without Enrolling Elsewhere
Public 4-Year	**70.7%**	**18.5%**	**10.8%**
Nonprofit 4-Year	**72.1%**	**17.9%**	**10.0%**
For-profit 4-Year	**53.8%**	**11.7%**	**34.5%**

[17] Six years out, graduates have a default rate that is one-third the rate of students who dropped out and about three-fifths of the overall default rate. Mark Kantrowitz, citing data from BPS 96:01 in "What is Gainful Employment? What is Affordable Debt," March 1, 2010, Revised March 11 2009 [sic], p. 9.

[18] Richard Posner, "The Controversy over For-Profit Colleges," the *Becker-Posner Blog*, http://uchicagolaw.typepad.com/beckerposner/2010/06/the-controversy-over-forprofit-collegesposner.html

Public 2-Year	**47.3%**	**18.6%**	**34.1%**
For-profit 2-Year	**67.1%**	**6.3%**	**26.6%**
Public < 2-Year	**67.1%**	**6.3%**	**26.6%**
For-profit <2-Year	**58.9%**	**5.1%**	**36.0%**

Source: Beginning Postsecondary Students, NCES, ED

Levels of debt at graduation are a strong indicator for the relative levels of debt that students would have if they dropped out before receiving a degree, as shown in Chart D.

Chart D

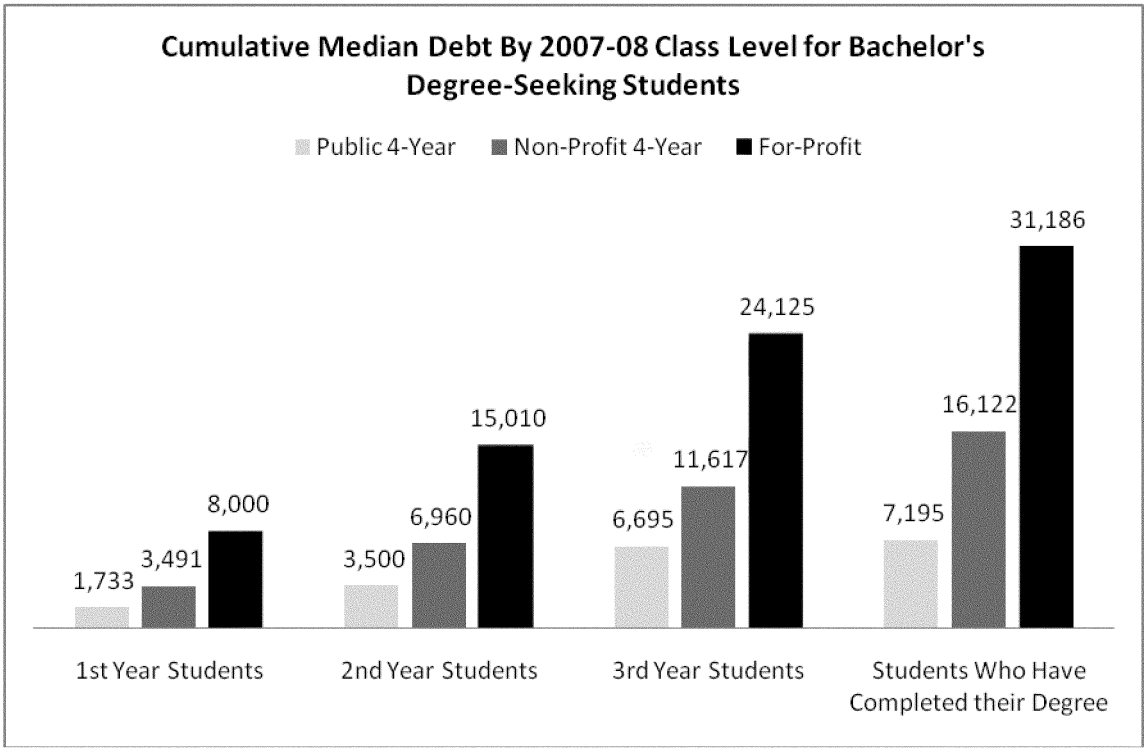

Source: 2008 National Postsecondary Student Aid Survey, NCES, ED

In the first two years of attending a bachelor's degree program at a for-profit institution, students accumulated almost as much debt as a student who *completed* a degree program at a nonprofit 4-year institution, and more than double the median level of debt for bachelor's degree recipients from public 4-year institutions.

5. "Gainful employment"

The HEA applies a variety of criteria for determining the eligibility of programs and institutions for title IV funds. For public and nonprofit institutions, degree programs of at least a year in length are generally eligible for title IV aid regardless of the subject or purpose of the program as long as they meet other requirements. In the case of shorter programs and programs

of any length at for-profit institutions, eligibility is restricted to programs that "prepare students for gainful employment in a recognize occupation." This difference in eligibility is longstanding and has been retained through many amendments to the HEA. While the for-profit institutions have sought inclusion in a single definition that would remove the gainful employment requirement, Congress has not made that change. Indeed, as recently as the Higher Education Opportunity Act of 2008 (HEOA), Congress maintained the distinct treatment of for-profit institutions while adding an exception for certain liberal arts baccalaureate programs at some for-profit institutions.

The legislative history of the gainful employment requirement bears directly on the issues now emerging in the data: Congress was concerned that availability of Federal student aid, particularly in the form of loans for some types of programs and institutions might lead to students taking on more debt than is reasonable given the earnings that could be expected. Congress extended loan eligibility beyond traditional degrees at traditional institutions after considering testimony regarding the connection between the expected earnings of the graduates and the debt burden they would incur from this training. A Senate Report quotes extensively from testimony provided by University of Iowa professor Dr. Kenneth B. Hoyt, who testified on behalf of the American Personnel and Guidance Association:

> It seems evident that, in terms of this sample of students, sufficient numbers were working for sufficient wages so as to make the concept of student loans to be [repaid] following graduation a reasonable approach to take. . . . I have found no reason to believe that such funds are not needed, that their availability would be unjustified in terms of benefits accruing to both these students and to society in general, nor that they would represent a poor financial risk. At 3749 Sen. Rep. No. 758, 89th Cong., First Sess. (1965) at 3745, 3748.

Congress cited the same affirmation from an industry spokesman, Lattie Upchurch, Jr., of Capitol Radio Engineering Institution, Washington, DC, who testified that "the purely material rewards of continued education are such that the students receiving loans will, in almost every case, be enabled to repay them out of the added income resulting from their better educational status." Id. at 3752 .

The concept of the training leading to gainful employment was intended to ensure that this connection between debt and earnings would not be lost. However, the Department has applied the barest minimum enforcement: when applying to access Federal funds, the institution must check a box that says its programs "prepare students for gainful employment in a recognized occupation."[19] While the Department does audit and review other aspects of program eligibility (such as the length of the program), there is no standard for determining whether a program in fact meets the gainful employment requirement.

While some have asked why the Department is considering new regulations that restrict most programs at for-profit institutions and few programs at public and nonprofit institutions, the statute itself imposes the gainful employment requirement to most programs at for-profit institutions, and exempts most programs at public and nonprofit instituitons. The statute may limit

[19] The application form is available at http://www.eligcert.ed.gov/ows-doc/eapp.pdf. Most institutions complete an electronic version of the form.

the Department from applying such a regulation to all programs at all institutions, but this does not mean that the Department should not enforce the regulation at the institutions where it can—especially in those institutions where the problem is becoming the most severe.

Proposed Approach

The trends in graduates' earnings, student loan debt, defaults and repayment underscore the need for the Department to act. The Secretary is proposing, for public comment, a gainful employment (GE) standard that would take into consideration repayment rates on Federal student loans, the relationship between total student loan debt and earnings after a postsecondary program, and, in some circumstances, employer endorsements of programs. In effect, the proposal would establish four eligibility status categories of gainful employment programs:

Criteria	Eligibility Status	Consequences
Loan repayment rate of at least 45 percent **AND** a debt-earnings ratio of 20 percent or less of discretionary income or 8 percent or less of average annual earnings.	*Eligible*	None.
Loan repayment rate of at least 45 percent **OR** a debt-earnings ratio of 20 percent or less of discretionary income or 8 percent or less of average annual earnings.	*Eligible*	Institutions must warn consumers and current students of high debt levels and provide the most recent debt measures for the program.
Loan repayment rate below 45 percent and unable to demonstrate debt-earnings of 20 percent of discretionary income or less or 8 percent or less of average annual earnings.	*Restricted*	Institutions must (1) demonstrate employer support for the program and (2) warn consumers and current students of high debt levels and provide the most recent debt measures for the program. The program is subject to limits on enrollment growth.
Loan repayment rate below 35 percent and a debt-earnings ratio above 30 percent of discretionary income and 12 percent of annual earnings.	*Ineligible*	No new students may receive title IV aid. Current students may continue to receive aid for the rest of the year and one additional award year. While phasing out a program, institutions must warn current and prospective students of high debt loads and reduced ability to repay their loans from projected earnings and provide the most recent debt measures for the program.
Program not in existence long enough to demonstrate repayment and debt-earnings outcomes.	*New programs*	Institution must demonstrate employer support for the program, and the new program is subject to limits on enrollment growth.

To minimize any disruption that might result from the eligibility regulation, the gainful employment standard would not go into effect until July 1, 2012. Prior to July 1, 2012, institutions should begin to assess the effect on programs they offer and could take steps to mitigate the number of programs negatively affected. Further, in the first year after the regulation takes effect, there would be a cap on the number of programs that could lose eligibility (the lowest-performing programs producing no more than five percent of completers during the prior award year), to facilitate programs' response to the rule.

Timeline

July 1, 2011	**Data** (in the NPRM published on 6/18/10): Institutions would begin providing information to the Department about students who completed gainful employment programs during the previous three years. The Department would determine average earnings (using information from another Federal agency such as the Social Security Administration) and median student loan debt. **Disclosure** (in the NPRM published 6/18/10): Institutions must provide on their Web sites information about the occupations for which their gainful employment programs are preparing students, and the graduation rates and median debts in those programs. **Program eligibility**: Additional programs subject to the gainful employment regulations must have employer affirmations that the program's curriculum is designed to prepare students for jobs like those at the employer's company. The program is subject to growth restrictions until loan repayment and debt measure data are available. The number, location, and size of the job placements for the businesses must be commensurate with the projected size of the program.

July 1, 2012	**Warning**: Programs subject to the gainful employment regulations that fail to meet one of the debt thresholds must include a warning in all promotional materials and provide the most recent repayment rate and debt measures for the program. **Program eligibility**: To remain eligible for title IV, HEA program funds , gainful employment programs must either have a Federal loan repayment rate of not less than 35 percent, or have student debt levels below the debt threshold. For one year, there would be a five percent cap on the number of programs (measured on the number of program completers in an award year) that can lose eligibility in that year. Ineligible programs that remain outside the cap would be subject to the employer-affirmation and growth provisions applicable to additional programs. Programs with loan repayment rates below 45 percent that fail to meet one of the debt thresholds would be subject to employer-affirmation and growth provisions, and the institution may be provisionally certified.
Definitions	
Repayment Rate:	Of the program's former students entering repayment with Federal loans in the previous four FFYs, the proportion of loans for those students who are paying more than the interest charges (or fully repaid the loans) or are in full-time public service positions (i.e. eligible to seek Public Service Loan Forgiveness) in the most recent FFY. Borrowers using in-school and military deferments are excluded from both the numerator and denominator.
Average Annual Earnings	The average annual earnings, in the most recent year for which postcompletion data are available, for the program's graduates from the previous three years. An institution may seek to measure earnings of earlier graduates (four to six years prior) if graduates typically experience large earnings increases after an initial period of employment. Earnings data would be acquired by the Department from a Federal agency. We anticipate obtaining this data from the Social Security Administration (SSA).
Discretionary Income:	The amount of total income above 150 percent of the poverty level (domestic U.S., family size of one) for the applicable year.

Debt Threshold	Loan payments as a proportion of either discretionary income or total income. The loan payments are the amount, based on a flat 10-year amortization schedule, of all of a student's loans (Federal, private, and institutional) taken at the institution, assuming the unsubsidized Stafford loan interest rate (6.8 percent). For full eligibility the proportion must be below 20 percent of discretionary income or 8 percent of average annual earnings. Rates of 30 percent of discretionary income and 12 percent of average annual earnings and above trigger ineligibility unless the repayment rate is in compliance.

Students who had started a program before it becomes ineligible would be able to continue to receive Federal aid for one additional award year beyond the year when the institution is notified that the program is no longer eligible. Prospective students who want to use Federal aid would be able to choose from other programs and institutions. Programs subject to adverse action under the rule can appeal through the standard process, subject to the limitation on challenging the average annual earnings calculation discussed in the preamble.

The Federal loan repayment rate would count in the numerator those loans that have been repaid in full, made payments of more than interest in the most recent fiscal year, or are qualifying for Public Service Loan Forgiveness (PSLF). This rate would be cumulative – looking at the repayment status of all former students in the program who took out Federal loans, if they entered repayment in the previous four fiscal years. Borrowers on an in-school or military deferment status would not be included in either the numerator or denominator.

The proposed regulation sets the repayment rate for ineligibility for gainful employment programs at 35 percent, indicating that slightly more than a third of recent former students are able to begin paying down their loan principal with money or through public service. According to the Department's analysis of NSLDS data, if this rate were applied to all public and nonprofit institutions fewer than 18 percent of them would fail to meet the measure. Of for-profit institutions, 48 percent currently fall below the 35 percent mark.[20]

The loan repayment rate includes consideration of both program completers as well as students who did not complete the program. Therefore, a low loan repayment rate may be an indicator of a large number of noncompleters with loans; those who complete the program may have been prepared for gainful employment. The proposed test for the question of whether a program with low repayment rates prepares program completers for gainful employment is whether the program's graduates meet a ratio of student debt and income. This test would use a sliding scale based on the Income-Based Repayment (IBR) program. The program assumes that borrowers with incomes below 150 percent of the poverty guideline are unable to make any payment, while borrowers with incomes above that level can devote 15 percent of each added dollar of earnings (Congress reduced that to 10 percent for new borrowers starting in 2013). While Congress has established policies allowing borrowers to reduce payments to 10 or 15 percent of discretionary income, the appropriate proportion for the purposes of the gainful

[20] Note: the estimated loan repayment rates described here are by institution, not by program, and do not include a consideration of public service work. Those data are not yet available.

employment definition would be higher. The IBR formula is based on research conducted by economists Sandy Baum and Saul Schwartz, who recommended 20 percent of discretionary income as the outer boundary of manageable student loan debt. This approach is one of those recommended by Mark Kantrowitz, publisher of Finaid.org.[21] As Chart E shows, for everyone above about $27,000 of income, this approach allows for higher debt levels than the eight percent approach that was discussed in negotiated rulemaking.

Chart E

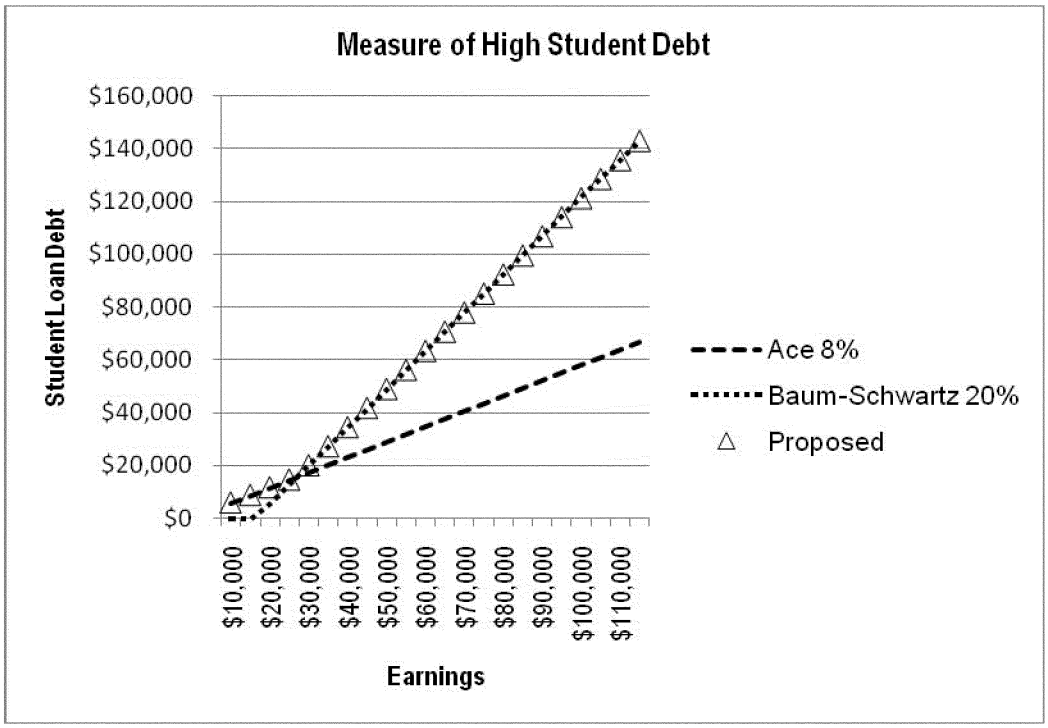

Table D provides the data underlying Chart E and indicate the maximum median a program may have so that the monthly payment falls under the proposed debt threshold. Table E provides the same information for the alternative debt threshold available to programs that fail the first two tests and request an evaluation of those who completed the program four to six years prior.

[21] Mark Kantrowitz, "What is Gainful Employment? What is Affordable Debt," March 1, 2010, Revised March 11 2009 [sic].

Table D: Maximum Monthly Payment by Annual Earnings for Debt Threshold

Annual Earnings	Threshold of "High Debt" 12%	Threshold of "High Debt" 30%	% of Total Earnings	Monthly Payment
$10,000	**$8,690**		12%	$100
$15,000	**$13,034**		12%	$150
$20,000	**$17,379**		12%	$200
$25,000	**$21,724**		12%	$250
$30,000		**$29,881**	14%	$344
$35,000		**$40,743**	16%	$469
$40,000		**$51,605**	18%	$594
$45,000		**$62,467**	19%	$719
$50,000		**$73,329**	20%	$844
$55,000		**$84,191**	21%	$969
$60,000		**$95,053**	22%	$1,094
$65,000		**$105,915**	23%	$1,219
$70,000		**$116,777**	23%	$1,344
$75,000		**$127,639**	24%	$1,469
$80,000		**$138,501**	24%	$1,594
$85,000		**$149,363**	24%	$1,719
$90,000		**$160,225**	25%	$1,844
$95,000		**$171,087**	25%	$1,969
$100,000		**$181,949**	25%	$2,094
$105,000		**$192,811**	25%	$2,219
$110,000		**$203,673**	26%	$2,344
$115,000		**$214,535**	26%	$2,469

Table E: Maximum Monthly Payment by Annual Earnings for Alternative Debt Threshold

Annual Earnings	Threshold of "High Debt" ACE 8%	Baum-Schwartz 20%	% of Total Earnings	Monthly Payment
$10,000	**$5,793**		8%	$67
$15,000	**$8,690**		8%	$100
$20,000	**$11,586**		8%	$133
$25,000	**$14,483**		8%	$167
$30,000		$19,921	9%	$229
$35,000		$27,162	11%	$313
$40,000		$34,404	12%	$396
$45,000		$41,645	13%	$479
$50,000		$48,886	14%	$563
$55,000		$56,127	14%	$646
$60,000		$63,369	15%	$729
$65,000		$70,610	15%	$813
$70,000		$77,851	15%	$896
$75,000		$85,093	16%	$979
$80,000		$92,334	16%	$1,063
$85,000		$99,575	16%	$1,146
$90,000		$106,817	16%	$1,229
$95,000		$114,058	17%	$1,313
$100,000		$121,299	17%	$1,396
$105,000		$128,541	17%	$1,479
$110,000		$135,782	17%	$1,563
$115,000		$143,023	17%	$1,646

The primary approach in this regulation is to measure income in the first three years after completion of a program. However, most graduates have typically repaid their loans over a period of about ten years. Some would argue that a more appropriate income measure would occur a few years after completion of the degree or certificate, since incomes increase with age and experience. Data shown in Chart F from the Michigan Survey Panel on Income Dynamics show that incomes increase by as much as 43 percent between the first few years out of postsecondary education and the sixth to tenth years out. It should be noted, however, that this increase is true for high school diplomas as well as postsecondary education; in other words, the income gaps measured in the early years generally serve as good indicators of the income gaps in the later years.

Chart F

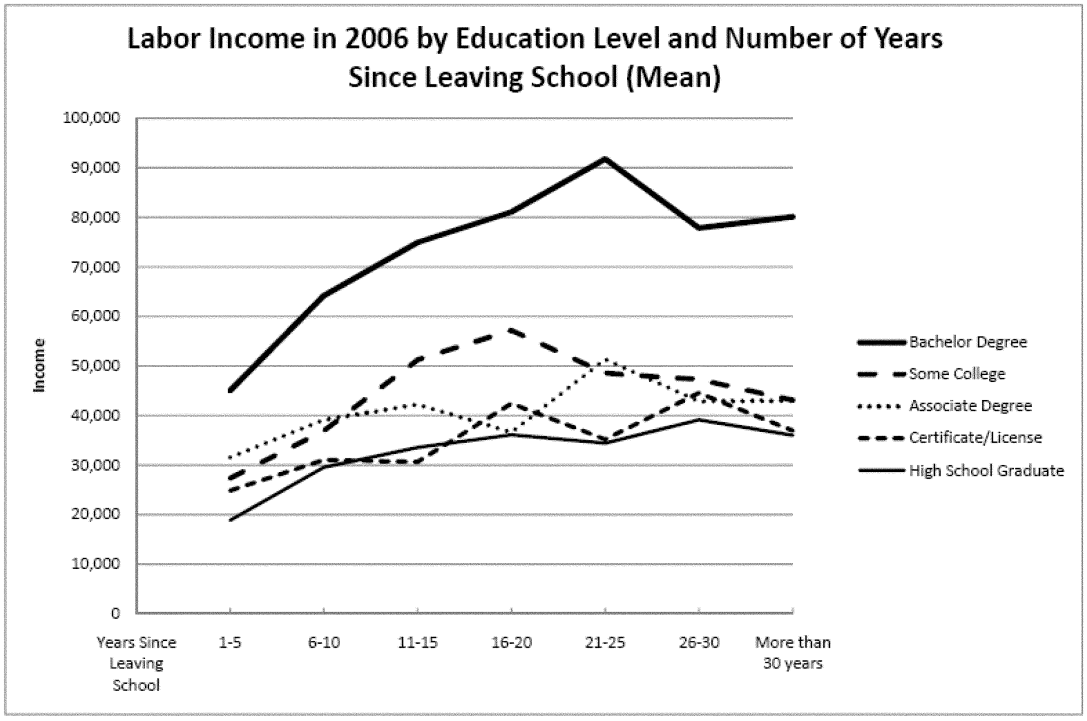

The Department's proposal adopts the view that a debt measure should consider incomes a few years after a student completes a program. The proposed regulation addresses this issue in two ways. First, when applying the debt measure to incomes from the first three years out of a program, the measure is adjusted to 30 percent rather than 20 percent. Second, an institution that has reason to believe that its graduates' earnings increase at a very high rate may seek to use earnings information from those who completed the program four to six years prior. In this latter case, the 20 percent measure would apply.

The discretionary income approach does not consider the fact that an individual who has *no* earnings at all may seek training in order to be able to get even a low-paying job. Any loan debt incurred by that individual would likely exceed 20 or 30 percent of his or her discretionary income. For this reason, the proposed regulation includes a threshold at 12 percent of *total* income, for those with lower incomes, or 8 percent if an institution seeks to measure completers from four to six years prior. This figure stems from historical lending practices that typically limit the annual student loan payment to no more than 8 percent of the student's annual pretax income so that the student has sufficient funds available to cover taxes, car payments, rent or mortgage payments, and other household expenses.[22]

The Department proposes to use median loan debt instead of another measure of loan debt because it effectively excludes extreme values that could otherwise skew the result. For example, by using the middle or median value the regulation avoids the circumstance where a small number of students with extremely high loan debt would distort the amount of loan debt incurred by students in the program. As an example, the debt measure calculated with calendar year 2013 income would include the median loan debt of students who completed the program in the years ending on June 30, 2009, 2010, and 2011. Institutions that have reason to believe that a longer time horizon would improve the institution's rate would be able to request an analysis of graduates from the award years ending in 2006, 2007, and 2008.

Actual pretax earnings data would be obtained by the Department from the Social Security Administration or another appropriate government source. We propose to determine average earnings, but we have not indicated how we would treat completers for whom there is no income information available. We are interested in input on whether they should be treated as zeroes, excluded from the calculation of the average, or if a median should be used instead.

Anticipated Effects of the Proposed Gainful Employment Provision

1. Effect on students

Prospective consumers of postsecondary education have tens of thousands of programs to choose from at thousands of institutions across the country and on the Internet. The purpose of this proposed regulation is to provide incentives for institutions to design and offer programs that will serve students well: preparing them for high-paying jobs without burdening them with excessive debts that cost them and taxpayers.

Outcomes of the proposed regulation would be for institutions to improve the quality of their programs and to emphasize in their recruiting those programs with the best occupational and salary outcomes, including public service professions. The Department is not attempting to estimate an aggregate dollar value for these outcomes, but they are expected to be substantial.

---

[22] According to the American Council on Education (ACE), "Student aid research generally considers monthly debt burden of 8 percent or less 'manageable.'" (in "Debt Burden: Repaying Student Debt," *Issue Brief*, American Council on Education, September 2004). The National Center on Education Statistics noted in 2000 that "housing lenders typically use an 8 percent rule for student loan debt," http://nces.ed.gov/das/epubs/2000188/burden.asp. And many campuses have used the 8 percent rule; for example, see the chart on this page from Ohio State University: http://sfa.osu.edu/basic/debt.asp?tab=b.

Institutions are also expected to adjust their pricing as a result of the regulation. In other industries, the S&P 500 long-term average operating margin (a measure of profit) is six percent. Data from the publicly-traded institutions indicate that operating margins for 2007-2009 have averaged 17 percent, and were 21 percent in 2009. Because a large proportion of the for-profit institutions have low repayment rates on their loans, we anticipate that at least half of the industry will adjust prices downward by an average of 10 percent as one way of complying with the proposed regulations. If this 10% adjustment were made, it could lead to significant ongoing tuition savings. Given IPEDS revenue data, the Department estimates this could be as much as $835 million, but we welcome comments to refine the estimate of this adjustment and its effects.

It is important to underscore that the proposed regulations do not determine whether a student is eligible for aid; the regulation is focused on the eligibility of the program. There have always been some programs that are eligible and others that are not eligible for Federal aid; most prospective students who would theoretically be affected by the regulation would never be aware that some programs moved from one side of that line to the other.

Furthermore, students already enrolled in programs would remain eligible for Federal aid for one award year beyond the award year when the institution is notified that the program is no longer eligible. This additional period of eligibility will allow most students to complete and other students to arrange for changing to a different program either at the same institution or at a different institution. Based on the scenarios described in the Model Specifications section of this RIA, the Department estimates that, as a result of a program losing eligibility to enroll new students using Federal aid, most students already enrolled would continue in programs, between 62,000 and 91,000 students would transfer to different programs at the same institution, between 69,000 and 126,000 students would transfer to a different institution, and between 16,000 and 30,000 students would leave programs without immediately enrolling elsewhere. These estimates represent the total effects across all sectors, with the greatest share coming from for-profit sectors, as shown in Tables J-1 through J-11.

More generally, however, future students will be likely to bear lower debt burdens and enroll in programs with a greater incentive to provide larger returns on their students' investment.

2. Effect on institutions and programs

Assessing the effect on institutions and programs requires estimating the programs that would fail both the repayment rate measure and the debt measure and would fail to take adequate steps to come into compliance before the effective date of the regulation in 2013. While repayment rates by program are not available, the Department has developed queries of the National Student Loan Data System (NSLDS) to determine repayment rates by institution. Further, to assess debt and income levels by program, the Department worked with the Missouri Department of Higher Education to combine income information which the State has for programs at public and for-profit institutions, with the Federal student loan information available from NSLDS.

Missouri is an appropriate and generally applicable lens to assess the potential effects nationally. The State's distribution of educational institutions is broadly similar to the nation. However, data availability limited the analysis to the public and for-profit sectors and excluded

cosmetology programs, a significant component of institutions that have only one program (single Classification of Instructional Program (CIP) code). On a student level, the Missouri data is broadly representative with the exception of race and ethnicity. Table F presents some demographic information comparing the State and national averages related to postsecondary education. A description of the data and methods used in the generation of the Missouri data will be available on the gainful employment analysis Web site at http://www2.ed.gov/policy/highered/reg/hearulemaking/2009/integrity.html.

Table F: Missouri Postsecondary Sector Compared to United States

	Missouri	United States (State average)
Postsecondary Education[5]		
Enrollment by sector (2007)		
Public, 4-year and above	133,870	142,935
Private, nonprofit, 4-year and above	141,747	69,289
Private, for-profit, 4-year and above	10,020	17,796
Public, 2-year	89,693	127,491
Private, nonprofit, 2-year	1,823	881
Private, for-profit, 2-year	7,710	6,367
Private, for-profit, less-than-two-year	2,512	4,584
Other less-than-two-year	933	1,338
Female students (2007, percent)	58.1%	57.4%
Race/ethnicity (2007, percent minority)	27.5%	41.0%
Undergraduate enrollment (2007)	315,170	318,731
Graduate enrollment (2007)	73,138	51,950
Bachelor's degree completions (2007-08)	35,405	31,076
Associates degree completions (2007-08)	14,380	14,940
Undergraduate certificate completions (2007-08)[6]	9,178	14,864

SOURCES:

[5] Integrated Postsecondary Education Data System, 2007 Fall Enrollment, Institutional Characteristics, and Completions Components. National Center for Education Statistics, U.S. Department of Education.

[6] These values only reflect certificates earned at title IV institutions.

Based on the institutional repayment rates, 80 percent of the public institutions would meet the 35 percent repayment rate requirement, while only 60 percent of the for-profit institutions would meet that test. These figures based on Missouri are similar to the national figures shown below.

Table G: Institutional Characteristics by Repayment Rate Test Performance

Sector	% of Institutions in Sector	Pell Recipients as % of 12 Month Undergrad Enrollment	Average Overall Graduation Rate
Public 4-Year Institutions			
Above 35% Repay Rate	89.15%	24.89%	46.27%
Below 35% Repay Rate	10.85%	46.34%	29.82%
Nonprofit 4-Year Institutions			
Above 35% Repay Rate	88.84%	25.81%	57.08%
Below 35% Repay Rate	11.16%	50.59%	43.13%
For-Profit 4-Year Institutions			
Above 35% Repay Rate	57.80%	40.49%	49.82%
Below 35% Repay Rate	42.20%	56.41%	44.68%
Public 2-Year Institutions			
Above 35% Repay Rate	72.67%	21.69%	25.78%
Below 35% Repay Rate	27.33%	27.41%	19.50%
Nonprofit 2-Year of Less Institutions			
Above 35% Repay Rate	83.58%	37.35%	67.62%
Below 35% Repay Rate	16.42%	61.56%	47.90%
For-Profit 2-Year Institutions			
Above 35% Repay Rate	56.11%	53.53%	64.73%
Below 35% Repay Rate	43.89%	75.78%	56.86%
Public < 2-Year Institutions			
Above 35% Repay Rate	93.92%	55.09%	81.59%
Below 35% Repay Rate	6.08%	45.96%	78.47%
For-Profit < 2-Year Institutions			
Above 35% Repay Rate	62.79%	54.43%	72.11%
Below 35% Repay Rate	37.21%	80.12%	63.42%

Source: NSLDS and *Integrated Postsecondary Education Data System* (IPEDS)

The next step would be for the institutions to determine whether their programs demonstrate earnings outcomes that are within the debt threshold requirement. The Missouri income figures indicate that about two-thirds of those programs would meet the debt threshold,

reducing the number of affected programs to 27 percent of the programs at for-profit institutions (all public institutions would pass based on the debt threshold). Tables G-1 and G-2 shows the estimated number of programs and students in each status based on the NSLDS repayment rate information and the Missouri debt-to-earnings information. The percentages represent the share of the programs or students subject to the rule falling within each cell. Observations for non-degree programs were not available for public four-year and private, nonprofit institutions, and they were assumed to have a debt-to-income performance similar to public two-year institutions.

Table G-1: Percentage of Programs Subject to Proposed Gainful Employment Regulations

Measure		**Debt-to-Income**		
Total number of programs subject to the proposed regulation	Metric 52,980	Using 3YP: - Above 12% of annual earnings **AND** - Above 30% of discretionary income Using P3YP: - Above 8% of annual earnings **AND** - Above 20% of discretionary income	Using 3YP: -Between 8% and not more than 12% of annual earnings **OR** -Between 20% and not more than 30% of discretionary income Using P3YP: Not Applicable	Using 3YP OR P3YP: -8% or less of annual earnings, **OR** 20% or less of discretionary income
Repayment Rate	At least 45%	Eligible <1%	Eligible <1%	Eligible (No Debt Warning) 39%
	At least 35% and less than 45%	Restricted ---	Restricted 3%	Eligible 26%
	Below 35%	Ineligible 5%	Restricted 4%	Eligible 22%

--- No observations in the source data.

Table G-2: Impact of Gainful Employment Proposed Regulations on Students

Measure		Debt-to-Income		
Total number of students enrolled in programs subject to the proposed regulation	Metric 3,190,476	Using 3YP: - Above 12% of annual earnings **AND** - Above 30% of discretionary income Using P3YP: - Above 8% of annual earnings **AND** - Above 20% of discretionary income	Using 3YP: -Between 8% and not more than 12% of annual earnings **OR** -Between 20% and not more than 30% of discretionary income Using P3YP: Not Applicable	Using 3YP OR P3YP: -8% or less of annual earnings, **OR** 20% or less of discretionary income
Repayment Rate	At least 45%	Eligible <1%	Eligible <1%	Eligible (No Debt Warning) 34%
	At least 35% and less than 45%	Restricted ---	Restricted 7%	Eligible 28%
	Below 35%	Ineligible 8%	Restricted 1%	Eligible 21%

--- No observations in the source data.

Institutions can be expected to take actions to improve the likelihood that their programs will meet one of the measures. In the Missouri data, 52 percent of programs are below the repayment rate and have relatively high debt (above 20 percent of discretionary income or 8 percent of total income). Institutions would have a strong financial incentive to take steps to make sure their programs meet the tests. As noted above, profits are very high in for-profit higher education, so many will adjust prices to attempt to bring programs into compliance. However, not every institution that makes a price adjustment will succeed in bringing the debt ratio below the cutoff. The successful ones will tend to be those that are closer to the 30 percent/12 percent. If we assume that programs that are now below 14 percent/35 percent debt ratios will be able to come in under the wire after some adjustments, then the number of programs missing the mark is 16 percent of the proprietary programs.

Two other adjustments are important. First, to address the fact that repayment rates by program will not actually be the same as repayment rates by institution, we should assume that some of those programs will not manage to meet the thresholds. Second, many institutions will seek to use incomes from earlier graduates (four to six years out from completion); some of them will meet the 20 percent/8 percent test. The analysis assumes that these two factors balance each other out.

During a transition period covering the first year that the regulation affects program eligibility the effect will be limited to five percent. To implement the cap, the Secretary would sort all programs subject to these regulations by credential type and then within each type, by loan repayment rate, from lowest to highest. Then for each credential type, beginning with the ineligible program with the lowest loan repayment rate, the Secretary would identify the ineligible programs that account for a combined number of students that completed the programs in the most recent award year that do not exceed five percent of the total number of students who completed programs in that credential type .

Table H summarizes the national demographic differences in students attending the institutions that are most affected by the regulation – for-profit institutions – and the public and nonprofit colleges and universities that are less likely to experience changes in program eligibility.

Table H: Socioeconomic Profiles of Undergraduate Students by Institutional Sectors: 2007-08

	Average Age	% independent	Median income (dependent)	Median income (independent)	% first-generation
Public 4-year	23.3	30.9	75,734	22,020	25.4
Nonprofit 4-year	24.3	33.6	84,470	30,284	24.3
For-profit 4-year	29.8	82.5	40,320	24,663	46.5
Public 2-year	27.8	57.2	54,225	29,421	39.7
Nonprofit 2-year or less	28.7	68.5	43,684	21,519	43.4
For-profit 2-year	27.1	72.4	34,553	16,432	54.5
Public <2-year	30.4	70.7	42,185	23,109	51.8
For-profit <2-year	26.3	67.0	34,611	12,990	55.1

	White	Black or African American	Hispanic or Latino	Asian	American Indian or Alaska Native	Native Hawaiian /other Pacific Islander	More than one race/other
Public 4-year	66.5	11.5	11.9	6.2	0.8	0.5	2.3
Nonprofit 4-year	67.7	11.7	11.6	5.5	0.3	0.6	2.2
For-profit 4-year	51.2	24.6	15.4	3.7	0.9	0.4	3.2

Public 2-year	60.2	14.4	14.8	6.1	1.0	0.9	2.3
Nonprofit 2-year or less	29.9	12.5	33.5	8.7	8.5	5.0	1.6
For-profit 2-year	44.8	28.7	18.8	2.9	1.4	1.1	2.0
Public <2-year	56.1	14.2	19.9	4.4	1.6	1.8	1.8
For-profit <2-year	38.8	20.3	35.1	2.5	0.7	0.5	1.9

While much of the Department's analysis has been done on the institutional or sector levels, Table I demonstrates that the effect of the proposed repayment rate regulation will vary by CIP code, one indication of the subject area of the training provided by a program. This result is based on an analysis of NSLDS and IPEDS data for institutions that report offering a program in a single CIP code. While this analysis does not capture the effect of the regulation at institutions that offer multiple programs, it does suggest that there could be a concentration of programs that need to adjust to the proposed regulation in certain CIP code categories, including cosmetology, vehicle maintenance, legal support services, culinary arts, ground transportation, audiovisual technology, and medical assistant services programs.

More generally, these changes will likely shift enrollment patterns toward institutions that provide a greater return on investment to students. Additionally, by creating minimum standards for repayment at the program level, taxpayers will be protected from default and delayed repayment.

Table I: Count and Percent of Institutions Awarding all Degrees in Single CIP Code that Meet 35% Repayment Rate in 2009

Only CIP Codes with 5 or More Cases are Included

CIP Code	CIP Name	Single CIP Code Institutions	Single CIP Institutions Below 35% Repay Rate	% Within CIP Code that Fail 35% Repay Rate Test
12.04	Cosmetology and Related Personal Grooming Services	578	186	32.2%
51.16	Nursing	146	5	3.4%
51.35	Somatic Bodywork and Related Therapeutic Services	66	3	4.5%
39.06	Theological and Ministerial Studies	62	11	17.7%
51.33	Alternative and Complementary Medicine and Medical Systems	32	14	43.8%
51.09	Allied Health Diagnostic, Intervention, and Treatment Professions	26	1	3.8%

47.06	Vehicle Maintenance and Repair Technologies	23	8	34.8%
24.01	Liberal Arts and Sciences, General Studies, and Humanities	19	5	26.3%
22.01	Law (LL.B, J.D.)	14	1	7.1%
22.03	Legal Support Services	12	6	50.0%
39.02	Bible/Biblical Studies	12	4	33.3%
50.04	Design and Applied Arts	12	0	0.0%
12.03	Funeral Service and Mortuary Science	11	1	9.1%
12.05	Culinary Arts and Related Services	11	4	36.4%
50.05	Drama/Theatre Arts and Stagecraft	9	1	11.1%
50.09	Music	9	0	0.0%
49.02	Ground Transportation	8	4	50.0%
50.07	Fine and Studio Art	6	0	0.0%
10.02	Audiovisual Communications Technologies/Technicians	5	0	0.0%
47.04	Precision Systems Maintenance and Repair Technologies	5	0	0.0%
48.05	Precision Metal Working	5	0	0.0%
51.08	Allied Health and Medical Assisting Services	5	2	40.0%

Transfer Effects

The Department does not currently have a count of the number of programs offered by institutions. As shown in Table G-1, the Department estimates that as many as 52,980 programs could be subject to this rule. The proxy used for the number of "programs" is IPEDS Completions data. It counts each instance of a 6-digit CIP code (area of study) by award level. So for example, if an institution awards a certificate in business as well as a bachelor's and a master's, this is counted as 3 separate programs. When aggregating to the 6-digit ID level so that it can be looked at with the repayment data, the number of programs is not unduplicated – it is straight sum of the number of programs for each institution/campus that is represented by the 6-digit OPEID. This may overstate the number of programs subject to the rule, and we welcome comments to help refine this measure.

If programs lose eligibility for title IV funds, a portion of the revenues and expenses attributable to that program will leave the higher education system and another portion would be redistributed to other programs and institutions as students continue their education at programs that meet the debt-to-income or repayment rate tests. The effect of this redistribution will depend on students' decisions about continuing their education, institutions' responses to their performance on the gainful employment tests, and the effect program closures and consumer disclosures have on demand for education leading to gainful employment. Table J summarizes the

effects of the provision across all sectors, while Tables J-1 to J-10 present the anticipated net benefits, costs and transfers associated with the gainful employment provision by sector in 2013-2014. Public institutions and private, nonprofit institutions are grouped across program length because of the small number of programs estimated to be subject to and ineligible under the proposed rule. The results shown represent the effects of full implementation of the proposed regulation. The proposed 5 percent cap by credential type would reduce the anticipated effects as the regulation is phased in. The assumptions that generate these effects are described in the Model Specifications section of this NPRM.

As discussed above, the greatest effects of the proposed regulation would occur within the for-profit sectors because of the share of their programs covered by the provision and the institution's performance on the repayment rate and debt-to-income tests. For public and private, nonprofit institutions, the regulation would have greater applicability and effect at institutions of two years or less. Across all sectors, the anticipated core revenue removed from the system as students who would have attended programs that lose eligibility elect not to pursue education ranges from approximately $191 million to $383 million dollars annually. While the revenue effects are significant, the results of this analysis indicate that opportunities exist for institutions that perform well at preparing students for gainful employment to capture most of the revenue from programs that can no longer offer title IV aid. Across all sectors, the revenues associated with those who remain at institutions that fail the tests to complete programs or switch programs ranges from $1,825 million to $2,692 million and transfers from program to program within sectors ranges from approximately $575 million to $1,060 million. These amounts that stay within a program, institution, or sector are not shown in the sector specific tables, but are summarized by sector in Table J-11.

Table J: Effect of Proposed Regulation Across All Sectors

Effect of Proposed Rule on Impacted Programs, Applying All Tests			
	Scenario 1	Scenario 2	Scenario 3
Programs by Status			
Fully Eligible	20,662	20,662	20,662
Ineligible	2,649	2,649	2,649
New Programs	*	*	*
Restricted	29,669	29,669	29,669
Total	52,980	52,980	52,980
Affected Students by Status			
Fully Eligible	2,618,476	2,618,476	2,617,476
Ineligible	307,000	307,000	307,000
New Programs	*	*	*
Restricted	265,000	265,000	266,000
Total	3,190,476	3,190,476	3,190,476
Detailed Impact of Ineligible Category			
Programs Ineligible	2,649	2,649	2,649
Students Completing Program	89,000	104,000	148,000

Students Enrolling in Another Program at the Same Institution	62,000	91,000	74,000
Students Enrolling At Another Institution in the Same Sector	88,000	56,000	48,000
Students Leaving Sector	38,000	24,000	21,000
Students Leaving Postsecondary Education	30,000	32,000	16,000
Core Revenues Leaving Institution ($mn)	1,060	672	575
Core Revenues Leaving Sector ($mn)	459	292	249
Core Revenues Permanently Lost ($mn)	364	383	191
Expenses Leaving Institution ($mn)	377	239	205
Expenses Leaving Sector ($mn)	164	104	89
Expenses Permanently Lost ($mn)	129	136	68
Changes in Federal Pell grants received by students ($mn)	(213)	(209)	(104)
Changes in Federal loans received by students ($mn)	20	21	11

Detailed Impact of Restricted Category			
Programs Restricted	29,669	29,669	29,669
Students Completing program	79,000	92,000	132,000
Students Enrolling in Another Program at the Same Institution	49,000	73,000	59,000
Students Enrolling At Another Institution in the Same Sector	76,000	49,000	41,000
Students Leaving Sector	35,000	22,000	19,000
Students Leaving Postsecondary Education	26,000	29,000	15,000
Core Revenues Leaving Institution ($mn)	922	592	500
Core Revenues Leaving Sector ($mn)	435	279	235
Core Revenues Permanently Lost ($mn)	321	355	178
Expenses Leaving Institution ($mn)	340	218	184
Expenses Leaving Sector ($mn)	165	106	89
Expenses Permanently Lost ($mn)	119	133	66
Changes in Federal grants received by students ($mn)	(110)	(123)	(62)
Changes in Federal loans received by students ($mn)	(9)	(10)	(5)

As indicated by the repayment rate and debt to earnings performance discussed above, as well as the small share of enrollment in certificate programs subject to the provision, public institutions will not be greatly affected by the proposed regulation. For both the public two-year and less-than-two-year sectors, while more programs are subject to the proposed regulation, the lower debt burdens taken on by students limit the effect of the provision on programs in the sectors. Table J-1 presents the estimated effects of the regulation on programs at public institutions that do not meet any of the tests. Given the operation of the cap and the performance of public institutions relative to other sectors, it is likely that the negative effects on this sector would be reduced to nothing in the proposed transition year.

Table J-1: Effect of Proposed Regulation on Public Institutions that Fail Tests

	Public Institutions		
	Scenario 1	**Scenario 2**	**Scenario 3**
Students Leaving System	*	*	*
Students Leaving Sector	*	*	*
Core Revenues Leaving System ($ mns)	3.3	3.4	1.7
Core Revenues Leaving Sector ($ mns)	6.8	4.2	3.5
Expenses Leaving System ($ mns)	1.3	1.3	0.7
Expenses Leaving Sector ($ mns)	2.6	1.6	1.4

***=Rounds to less than 1,000 students**

For institutions within the sector that pass the gainful employment tests, there will be an opportunity to gain students from within the sector and from other sectors. As seen in Table J-2, the model assumes programs that receive students gain tuition and fee revenue but would not necessarily increase other sources of revenue. According to IPEDS data, tuition and fee revenue does not always cover instructional expenses. The Department welcomes comments on possible constraints on programs at public institutions accepting more students.

Table J-2: Effect of Proposed Regulation on Public Institutions that Pass Tests

	Public Institutions		
	Scenario 1	**Scenario 2**	**Scenario 3**
Students Gained from Other Sectors	19,000	12,000	10,000
Tuition and Fee Revenues Gained from Other Sectors	148.7	94.3	80.7
Expenses from Other Sectors	286.5	181.7	155.5

The estimated effects of the provision on programs at private nonprofit institutions are similar to those in the public four-year sector, due to the applicability of the regulation and the performance on the gainful employment tests. The Department did not have specific data on the performance of this sector on the debt to earnings measures but assumed it would fall within the range from the public and for-profit sectors. Table J-3 presents the estimated effects on those programs that fail, showing that approximately $1.4 million to $3.7 million would leave the sector or system before the effect of the cap.

Table J-3: Effect of Proposed Regulation on Private Nonprofit Institutions that Fail Tests

	Private, Nonprofit		
	Scenario 1	Scenario 2	Scenario 3
Students Leaving System	*	*	*
Students Leaving Sector	*	*	*
Core Revenues Leaving System ($ mns)	1.2	1.3	0.6
Core Revenues Leaving Sector ($ mns)	2.5	1.6	1.3
Expenses Leaving System ($ mns)	0.6	0.6	0.3
Expenses Leaving Sector ($ mns)	1.2	0.7	0.6

***=Rounds to less than 1,000 students**

In the scenarios described in Model Specifications section following these tables, programs that pass the gainful employment tests within the nonprofit sector may gain between $152.9 million and $281.5 million in tuition and fee revenue if they have the capacity to take on students anticipated to transfer between sectors.

Table J-4: Effect of Proposed Regulation on Private Nonprofit Institutions that Pass Tests

	Private, Nonprofit		
	Scenario 1	Scenario 2	Scenario 3
Students Gained from Other Sectors	10,000	6,000	5,000
Tuition and Fee Revenues Gained from Other Sectors	281.5	178.7	152.9
Expenses from Other Sectors	316.3	200.9	172.0

Given the broad applicability of the proposed regulation to for-profit programs and the current performance of institutions within the sector on the gainful employment tests, the effect of the provision on for-profit sectors is estimated to be significant. As shown in Table J-5, the anticipated loss of core revenues from programs in the sector ranges from $280 million to $527

million per year before the effect of the cap. Additional revenues would be shifted to programs that meet the tests within the institution and within the sector.

Table J-5: Effect of Proposed Regulation on Private For-Profit 4-Year Institutions that Fail Tests

	Private For-Profit 4-Year		
	Scenario 1	Scenario 2	Scenario 3
Students Leaving System	16,000	16,000	8,000
Students Leaving Sector	20,000	12,000	11,000
Core Revenues Leaving System ($ mns)	234.5	243.8	121.9
Core Revenues Leaving Sector ($ mns)	292.5	185.1	158.0
Expenses Leaving System ($ mns)	81.6	84.9	42.5
Expenses Leaving Sector ($ mns)	101.8	64.4	55.0

However, for programs within the sector that pass the gainful employment tests, the opportunity exists to capture additional revenues from within the sector ranging from $432 million to $682 million annually. Additionally, as a sector that is less capacity constrained, programs that perform well under the new regulation could gain students from other sectors, as shown in Table J-6.

Table J-6: Effect of Proposed Regulation on Private For-Profit 4-Year Institutions that Pass Tests

	Private For-Profit 4-Year		
	Scenario 1	Scenario 2	Scenario 3
Students Gained from Other Sectors	3,000	2,000	2,000
Tuition and Fee Revenues Gained from Other Sectors ($ mns)	100.8	64.2	55.2
Expenses from Other Sectors ($ mns)	27.5	17.5	15.0

The broad applicability of the provision and the estimated performance of programs within the sectors results in a significant effect of the proposed regulation on the for-profit two-year and less-than-two-year sectors. Table J-7 presents the estimated effect on programs that fail at for-profit two-year institutions, while Table J-8 indicates the potential effects on programs that fail at short-term for-profit institutions.

Table J-7: Effect of Proposed Regulation on Private For-Profit 2-Year Institutions that Fail Tests

	Private For-Profit 2-Year		
	Scenario 1	Scenario 2	Scenario 3
Students Leaving System	11,000	12,000	6,000
Students Leaving Sector	14,000	9,000	8,000
Core Revenues Leaving System ($ mns)	107.4	113.9	57.0
Core Revenues Leaving Sector ($ mns)	135.5	86.2	74.5
Expenses Leaving System ($ mns)	39.7	42.1	21.1
Expenses Leaving Sector ($ mns)	50.1	31.9	27.6

Table J-8: Effect of Proposed Regulation on Private For-Profit Less-than-2-Year Institutions that Fail Tests

	Private For-Profit Less than 2-Year		
	Scenario 1	Scenario 2	Scenario 3
Students Leaving System	2,000	3,000	1,000
Students Leaving Sector	3,000	2,000	2,000
Core Revenues Leaving System ($ mns)	17.3	20.2	10.1
Core Revenues Leaving Sector ($ mns)	22.2	14.4	12.0
Expenses Leaving System ($ mns)	6.2	7.2	3.6
Expenses Leaving Sector ($ mns)	7.9	5.1	4.3

The potential losses from programs that fail the gainful employments tests create opportunities for programs that are performing. Core revenues associated with transfers within the for-profit two-year sector are estimated to range from $174 million to $316 million. For programs at for-profit institutions of less-than-two years, transfers within the sector could range from $28 million to $52 million. The potential gains from other sectors are presented in Table J-9 for the for-profit two-year sector and Table J-10 for the for-profit less-than-two-year sector.

Table J-9: Effect of Proposed Regulation on Private For-Profit 2-Year Institutions that Pass Tests

	Private For-Profit 2-Year		
	Scenario 1	Scenario 2	Scenario 3
Students Gained from Other Sectors	4,000	3,000	2,000
Tuition and Fee Revenues Gained from Other Sectors ($ mns)	70.9	45.0	38.3
Expenses from Other Sectors ($ mns)	31.7	20.1	17.1

Table J-10: Effect of Proposed Regulation on Private For-Profit Less-than-2-Year Institutions that Pass Tests

	Private For-Profit Less than 2-Year		
	Scenario 1	Scenario 2	Scenario 3
Students Gained from Other Sectors	2,000	1,000	1,000
Tuition and Fee Revenues Gained from Other Sectors ($ mns)	27.9	17.7	15.3
Expenses from Other Sectors ($ mns)	12.8	8.1	7.0

Table J-11: Effects Retained in Sector from Ineligible Programs

	Public Institutions		
	Scenario 1	Scenario 2	Scenario 3
Students who Complete Existing Program	900	1,000	1,500
Students who Switch Programs at same Institution	600	900	700
Students who Transfer In-Sector	600	400	300
Core Revenues Associated with Completers ($mns)	10	12	16
Core Revenues Associated with Program Switchers ($mns)	6.8	10.1	8.3
Core Revenues of Transfers within Sector ($mns)	6.8	4.2	3.5
Expenses Associated with Students who Complete ($mns)	3.8	4.4	6.3
Expenses Associated with Students who Switch Programs ($mns)	2.6	3.9	3.2
Expenses Transferred Within Sector ($mns)	2.6	1.6	1.4

Private, Nonprofit			
	Scenario 1	Scenario 2	Scenario 3
Students who Complete Existing Program	300	300	500
Students who Switch Programs at same Institution	200	300	200
Students who Transfer In-Sector	200	100	100
Core Revenues Associated with Completers ($mns)	3.5	4.0	5.8
Core Revenues Associated with Program Switchers ($mns)	2.2	3.3	2.7
Core Revenues of Transfers within Sector ($mns)	2.4	1.5	1.2
Expenses Associated with Students who Complete ($mns)	1.5	1.5	2.0
Expenses Associated with Students who Switch Programs ($mns)	1.1	1.3	1.1
Expenses Transferred Within Sector ($mns)	0.9	0.7	0.5

Private For-Profit 4-Year			
	Scenario 1	Scenario 2	Scenario 3
Students who Complete Existing Program	46,800	54,600	78,000
Students who Switch Programs at same Institution	33,000	48,900	39,700
Students who Transfer In-Sector	46,100	29,100	24,900
Core Revenues Associated with Completers ($mns)	694.1	809.0	1156.0
Core Revenues Associated with Program Switchers ($mns)	485.8	719.7	584.7
Core Revenues of Transfers within Sector ($mns)	682.5	431.9	368.7
Expenses Associated with Students who Complete ($mns)	241.6	281.6	402.4
Expenses Associated with Students who Switch Programs ($mns)	168.9	250.2	203.3
Expenses Transferred Within Sector ($mns)	237.6	150.4	128.4

Private For-Profit 2-Year			
	Scenario 1	Scenario 2	Scenario 3
Students who Complete Existing Program	33,600	39,100	55,900
Students who Switch Programs at same Institution	23,300	34,400	27,800
Students who Transfer In-Sector	33,400	21,300	18,400
Core Revenues Associated with Completers ($mns)	317.8	370.1	529.0
Core Revenues Associated with Program Switchers ($mns)	220.8	326.2	263.5
Core Revenues of Transfers within Sector ($mns)	316.2	201.2	173.8
Expenses Associated with Students who Complete ($mns)	117.0	74.4	64.3
Expenses Associated with Students who Switch Programs ($mns)	50.1	31.9	27.6
Expenses Transferred Within Sector ($mns)	39.7	42.1	21.1

Private For-Profit Less than 2-Year			
	Scenario 1	Scenario 2	Scenario 3
Students who Complete Existing Program	7,500	8,700	12,400
Students who Switch Programs at same Institution	4,600	6,800	5,500
Students who Transfer In-Sector	7,300	4,700	4,000
Core Revenues Associated with Completers ($mns)	53.2	61.6	88.2
Core Revenues Associated with Program Switchers ($mns)	30.6	45.3	36.8
Core Revenues of Transfers within Sector ($mns)	51.8	33.6	28.0
Expenses Associated with Students who Complete ($mns)	18.9	21.9	31.4
Expenses Associated with Students who Switch Programs ($mns)	10.9	16.2	13.1
Expenses Transferred Within Sector ($mns)	18.4	12.0	10.0

Model Specifications:

The Department developed a model to estimate the effects of the gainful employment provision. The model does not attempt to predict what outcome is likely to occur, but distributes the revenue, expense, and enrollment levels from institutional data according to the student

outcome scenarios described in Table M. The Department believes these scenarios capture the range of likely outcomes, but welcomes comments on the scenarios presented. Branches of institutions were rolled up to generate repayment rate information by owner. Approximately 33 percent of the for-profit institutions identified as participating in title IV programs and 77 percent of revenues within the sector are controlled by approximately 38 corporate owners. In evaluating the effect of this regulation, the Department associated institutions by corporate owner as the potential effects on programs will vary by type of institution and control. Table K summarizes all title IV institutions by the number of programs they offer.

Table K: Profile of Institutions by Number of Programs Offered

Number of Programs Offered	Number of Institutions	% of Institutions that are For-Profit	Total Revenues ($ mn)	Total Enrollment	% Passing Repayment Rate
Single Program	1,387	68%	3,966.5	317,248	75.5%
Multiple Programs	4,214	24%	430,802.9	15,661,047	76.1%

Source: IPEDS and NSLDS

As the potential response of students and ability of institutions to adapt to the provision may vary by size and range of program offerings, the model used to estimate the effects of the provision allows for the specification of assumptions by sector, scenario, and whether an institution offers multiple programs or concentrates on a single CIP code. The Department used NSLDS data to estimate the repayment rate and combined that with institutional data from IPEDS to identify institutions that would pass or fail the repayment rate test. The NSLDS data is available at the institutional level at this point, but will be applied at the program level under the rule. The use of institutional level data could overstate or understate the number of programs affected by the rule. If the repayment data were at the program level, it may be that only a handful of programs at the institution would be impacted as opposed to all of the regulated programs or that some programs at institutions with passing repayment rates do not pass. This issue would be most problematic with institutions that have an institutional repayment rate right on the edge of the threshold and so it is likely that some programs would fail and some would pass.

The institutions were classified into groups by sector, single CIP status, and repayment rate test performance, resulting in four groups per sector. The anticipated effects on revenues, expenses, and enrollment was generated by applying sector level assumptions about enrollment growth, the likelihood that students would transfer within the sector, the applicability of the provision to the sector, and the anticipated effect of the debt tests on programs. The sector-level assumptions are shown in Table L.

Table L: Sector-Level Assumptions

	Public 4-year or above	Private nonprofit 4-year or above	Private for-profit 4-year or above	Public 2-year	Private nonprofit 2-year	Private for-profit 2-year	Public less-than-2-year	Private nonprofit less-than-2-year	Private for-profit less-than-2-year
% of Transfers Sector Retains	0.50	0.50	0.70	0.50	0.50	0.70	0.50	0.50	0.70
% of Sector Provision Applies to Annual Enrollment Growth	0.05	0.03	0.99	0.20	0.45	0.99	0.95	0.95	0.99
Percentage Ineligible Debt Test Adjustment %	0.02	0.02	0.04	0.02	0.02	0.05	0.02	0.04	0.04
Restricted Debt Test Adjustment %	0.01	0.05	0.48	0.01	0.05	0.41	0.01	0.05	0.10
% of Total Expenses Saved	0.01	0.05	0.24	0.01	0.05	0.24	0.01	0.05	0.10
% of Salary Expenses Saved	0.40	0.40	0.40	0.40	0.40	0.40	0.40	0.40	0.40
	0.60	0.60	0.60	0.60	0.60	0.60	0.60	0.60	0.60

The model also includes assumptions by scenario to capture the effect of student responses to a loss of eligibility. For this NPRM, a standard set of assumptions was used for each scenario to capture the potential for current students to complete the program, and for current and entering students to switch to another program at the same institutions, transfer within the sector, or transfer out of the sector, as seen in Table M. Students who transfer out of the sector were distributed to other sectors according to shares in Table N.

Table M: Transfer Assumptions

	Scenario 1	Scenario 2	Scenario 3
All Sectors			
% of Current Students who Complete			
Institutions with Multiple Programs	30%	35%	50%
Institutions with Single CIP	40%	45%	65%
% of Current Students who Switch Programs			
Institutions with Multiple Programs	20%	30%	25%
Institutions with Single CIP	0%	0%	0%
% of Current Students who Transfer			
Institutions with Multiple Programs	40%	25%	20%
Institutions with Single CIP	50%	35%	25%
% of Current Students who leave Education			
Institutions with Multiple Programs	10%	10%	5%
Institutions with Single CIP	10%	20%	10%
% of New Students who Complete			
Institutions with Multiple Programs	0%	0%	0%
Institutions with Single CIP	0%	0%	0%
% of New Students who Switch Programs			
Institutions with Multiple Programs	40%	50%	25%
Institutions with Single CIP	0%	0%	0%
% of New Students who Transfer			
Institutions with Multiple Programs	55%	40%	70%
Institutions with Single CIP	85%	90%	95%
% of New Students who leave Education			
Institutions with Multiple Programs	5%	10%	5%
Institutions with Single CIP	15%	10%	5%

Table N: Distribution of Students who Transfer Out of Sector when Program Loses Eligibility

From/To Sector	Public 4-year or above	Private nonprofit 4-year or above	Private for-profit 4-year or above	Public 2-year	Private nonprofit 2-year	Private for-profit 2-year	Public less-than-2-year	Private nonprofit less-than-2-year	Private for-profit less-than-2-year
Public 4-year or above	0.00	0.25	0.35	0.25	0.03	0.05	0.03	0.02	0.02

Private nonprofit 4-year or above	0.15	0.00	0.40	0.30	0.03	0.05	0.03	0.02	0.02
Private for-profit 4-year or above	0.25	0.20	0.00	0.30	0.03	0.15	0.04	0.02	0.02
Public 2-year	0.15	0.15	0.20	0.00	0.15	0.15	0.04	0.08	0.08
Private nonprofit 2-year	0.10	0.10	0.15	0.23	0.00	0.25	0.05	0.04	0.08
Private for-profit 2-year	0.10	0.05	0.20	0.30	0.10	0.00	0.05	0.10	0.10
Public less-than-2-year	0.05	0.05	0.15	0.25	0.10	0.25	0.00	0.05	0.10
Private nonprofit less-than-2-year	0.10	0.10	0.15	0.24	0.04	0.25	0.04	0.00	0.08
Private for-profit less-than-2-year	0.10	0.10	0.10	0.15	0.10	0.25	0.10	0.10	0.00

The Department welcomes comments on the assumptions presented in this NPRM. Updated estimates of the provision's effect to reflect changes to the assumptions and specifications of the model will be published in the final regulations.

Paperwork Burden Costs

In assessing the potential impact of these proposed regulations, the Department recognizes that certain provisions are likely to increase workload for some program participants. This additional workload is discussed in more detail under the Paperwork Reduction Act of 1995 section of this preamble. Additional workload would normally be expected to result in estimated costs associated with either the hiring of additional employees or opportunity costs related to the reassignment of existing staff from other activities. In total, these proposed changes are estimated to increase burden on institutions participating in the title IV student assistance programs by 91,376 hours per year. The monetized cost of this additional burden on institutions, using wage data developed using Bureau of Labor Statistics available at http://www.bls.gov/ncs/ect/sp/ecsuphst.pdf, is $1,892,397. This cost was based on an hourly rate of $20.71 that was used to reflect increased management time to establish new data collection procedures associated with the gainful employment provisions.

Table O: Estimated Annual Paperwork Burden by Requirement

Provision	Reg. Section	OMB Control #	Hours	Costs
Report CIP codes for students who enter repayment in prior four FFYs	668.7(a)(3)(viii)	OMB 1845-NEW4	40,666	842,193

Information to calculate debt measure for completers from P3YP	668.7(c)	OMB 1845-NEW4	2,980	61,716
Student notification of potential financial burden	668.7(d)	OMB 1845-NEW4	298	6,172
Enrollment plan and employer documentation for restricted programs	668.7(e)	OMB 1845-NEW4	8,382	173,591
Employer affirmations and debt warning for ineligible institutions outside of the first-year cap	668.7(f)	OMB 1845-NEW4	30,600	633,726
New program research and proposals	668.7(h)	OMB 1845-NEW4	8,450	175,000

Table O relates the estimated burden of each paperwork requirement to the hours and costs estimated in the Paperwork Reduction Act section of this NPRM. The largest burden comes from reporting CIP codes for students who enter repayment in the prior four FFYs, followed by the issuance of debt warnings and submission of employer affirmations by programs ineligible by their performance on the gainful employment tests but able to continue participation because of the initial cap. Employer verifications and enrollment projections for new and additional programs are also required. The following information for the students who completed during the prior three-year period including the student's CIP code, the completion date, the amount of private educational loans and the amount of debt incurred from institutional financing plans to facilitate the calculation of the alternative debt threshold must be submitted. Under 668.7(d), if a program exceeds the debt threshold, the Secretary notifies the institution that it must include a prominent warning in its promotional, enrollment, registration, and other materials describing the program, including those on its Web site, designed and intended to alert prospective and currently enrolled students that they may have difficulty repaying loans obtained for attending that program.

As described in the Paperwork Reduction Act section of the NPRM , in proposed §668.7(e)(2), whenever an institution offers a new or replacement program, it will be required to submit: (1) documentation of the approval of a substantive change by its accrediting agency or an explanation of why the new program does not constitute a substantive change; (2) projected student enrollment for the next five years for each location of the institution that will offer the program; and (3) documentation from employers not affiliated with the institution affirming that the curriculum for the new program aligns with recognized occupations at those employers' businesses. The number, locations, and size of the employers would need to be commensurate with the anticipated size of the program. An estimate of 8,450 hours associated with generating this information over the initial three-year period is based on 650 new or replacement programs.

In addition to the reporting requirements described in this NPRM, institutions are required to submit information annually that would include identifying information about each student who completed a program that prepares a student for gainful employment, the CIP code for that program, the date the student completed the program, and the amounts the student received from private educational loans and institutional financing programs. Institutions would have to disclose on their Web site information about the occupations that their programs prepare students to enter,

information from DOL's O-Net data about the job tasks and expected salaries. In addition, the institution would also have to report the costs for tuition and fees, room and board, and other associated institutional costs typically incurred by students enrolling in these programs; graduation rates; placement rates; and median debt rate information about title IV, HEA loans and private loans as provided by the Department to the institution. A description of these requirements and the estimated burden and costs associated with them is provided in the Program Integrity NPRM (75 FR 34806) published in the Federal Register on June 18, 2010 and available at http://edocket.access.gpo.gov/2010/pdf/2010-14107.pdf. The estimated hours and costs of those requirements were 105,377 and approximately $2,182,885.

Federal Costs

The proposed regulations are estimated to have a net budget impact ranging between $343.3 million in Scenario 3 to $681.2 million in Scenario 2 in savings over FYs 2011-2015. Consistent with the requirements of the Credit Reform Act of 1990, budget cost estimates for the student loan programs reflect the estimated net present value of all future non-administrative Federal costs associated with a cohort of loans. (A cohort reflects all loans originated in a given fiscal year.)

These estimates were developed using the Office of Management and Budget's (OMB) Credit Subsidy Calculator. (This calculator will also be used for reestimates of prior-year costs, which will be performed each year beginning in FY 2009). The OMB calculator takes projected future cash flows from the Department's student loan cost estimation model and produces discounted subsidy rates reflecting the net present value of all future Federal costs associated with awards made in a given fiscal year. Values are calculated using a "basket of zeros" methodology under which each cash flow is discounted using the interest rate of a zero-coupon Treasury bond with the same maturity as that cash flow. To ensure comparability across programs, this methodology is incorporated into the calculator and used government-wide to develop estimates of the Federal cost of credit programs. Accordingly, the Department believes it is the appropriate methodology to use in developing estimates for these proposed regulations. That said, however, in developing the following Accounting Statement, the Department consulted with OMB on how to integrate our discounting methodology with the discounting methodology traditionally used in developing regulatory impact analyses.

Absent evidence of the impact of these proposed regulations on student behavior, budget cost estimates were based on behavior as reflected in various Department data sets and longitudinal surveys listed under Assumptions, Limitations, and Data Sources. Program cost estimates were generated by running projected cash flows related to each provision through the Department's student loan cost estimation model. Student loan cost estimates are developed across five risk categories: proprietary institutions (less than two-year), two-year institutions, freshmen/sophomores at four-year institutions, juniors/seniors at four-year institutions, and graduate students. Risk categories have separate assumptions based on the historical pattern of behavior--for example, the likelihood of default or the likelihood to use statutory deferment or discharge benefits--of borrowers in each category.

The gainful employment provision is not expected to affect Federal costs, as students are typically assumed to resume their education at another program in the event the program they are

attending loses eligibility to participate in the student loan program or is in a restricted status. However, the scenarios presented in this NPRM anticipate that some students would not pursue education if their program loses eligibility, so we have estimated potential Federal costs under those scenarios. The estimated savings come from Federal loans and Pell Grants not taken by students who do not pursue an education in each scenario. The estimated net impact on the Federal budget between FY 2011 to FY 2015 are savings of $741.3 million in Scenario 1, $799.6 million in Scenario 2, and $404.4 million in Scenario 3. Of these estimated savings, approximately $645.8 million in Scenario 1, $697.6 million in Scenario 2, and $373.3 million in Scenario 3 would be from reductions in Pell Grants.

Accounting Statement

As required by OMB Circular A-4 (available at www.Whitehouse.gov/omb/Circulars/a004/a-4.pdf), in Table P, we have prepared an accounting statement showing the classification of the expenditures associated with the provisions of these proposed regulations. This table provides our best estimate of the changes in Federal student aid payments as a result of these proposed regulations. Expenditures are classified as transfers from the Federal Government to student loan borrowers.

Table P: Accounting Statement: Classification of Estimated Expenditures (in millions) Scenario 1/ Scenario 2/ Scenario 3	
Category	Benefits
	Costs
Revenues associated with students who leave system	$552/ 595/ 297
Cost of paperwork burden	1.3/1.3/1.3
Category	Transfers
Annualized Monetized Transfers	$(181)/(195)/(98.6)
From Whom To Whom?	Federal Government To Student Loan Borrowers
Annualized Monetized Transfers	$619.2
From Whom To Whom?	Ineligible programs to students as potential tuition changes

Alternatives Considered

Throughout the process of developing the proposed regulation, the Department considered several alternatives for defining gainful employment, including graduation and placement rates, a higher repayment rate threshold, an index, alternative debt measures, and default rates. These options and the reasons they were not adopted are discussed below.

Graduation and placement rates. During the negotiated sessions, we suggested the idea of a combined graduation rate and placement rate. The non-Federal negotiators objected to the graduation rate that was suggested as too high and did not recommend an alternative. Further, they raised concerns about the ability of institutions to obtain valid placement information from graduates and employers. In the other package of regulations we are proposing disclosure of program-level graduation and placement rates. Based on the information we have available, using them as a measure of gainful employment would be premature.

Disclosure. A number of institutions recommended that the Department require additional disclosures so that consumers can make better-informed decisions. However, disclosures cannot serve as a standard for determining whether a program complies with the gainful employment requirement in the statute. For example, with a disclosure approach an institution might report that one of its programs did not place a single graduate into a job, yet the program would remain eligible as "preparing students for gainful employment in a recognized occupation" because it disclosed the fact that it had failed to do so.

Default rates. The application of default rates to institutional eligibility is one tool that Congress has used that is at least somewhat related to debt burdens. Under current law, prospective students are not allowed to use their Federal aid at an institution that had a high default rate among its former students. However, a low default rate is not synonymous with a low debt burden: an institution can have a low default rate even if its former students are unemployed and impoverished. While having an income is a necessary condition for making standard payments on a Federal student loan, staying out of default mostly requires borrowers to remain in communication with their lenders. Borrowers who can demonstrate that they are low income need not make substantial payments. As noted earlier, forbearance, deferments for economic hardship and unemployment, and income-contingent and income-based repayment are important consumer protections that help keep former students out of default. Therefore, cohort default rates, alone, are not an adequate standard for assessment whether a program prepares students for gainful employment.

Higher repayment rate. At the negotiated rulemaking sessions, the Department suggested a loan repayment rate of 75 percent of all borrowers in a program, and later suggested a rate of 90 percent for completers. While the precise definition of the rate that is now being proposed is not the same as what was being discussed, the rates originally considered were clearly much higher. The Department modified its expectations for loan repayment in light of further research and community input.

An index. Still other have recommended the creation of an index that would take into consideration an institution's or program's default rate, graduation rate, placement rate, the

proportion of low-income students served, and other factors. There has not been a concrete proposal, nor is it clear how such an index would logically measure gainful employment. Furthermore, one should be cautious about assuming that an institution enrolling lower-income students should necessarily have lower expectations for the future employment or earnings of graduates. An index could be a good approach to provide incentives, perhaps as a method of distributing funds in a program. While we find the concept appealing, we are not convinced that it is appropriate for this task.

Additional Information Requested and Areas for Future Study

The Department welcomes comments on the proposed regulation, anticipated effects, and assumptions underlying the estimates presented in this NPRM. In particular, data about debt burdens by program and student responses to changes in program eligibility status would be helpful. Information received will be considered in development of the final regulation.

The Department recognizes that the data that will be generated in the development and implementation of this regulation will allow additional study of the value of programs subject to the rule and the effect of the rule. The Department will consider evaluating the effects on the student population and the labor market, including changes in income, debt, and educational attainment. We welcome comments and suggestions for additional areas for future evaluation.

Initial Regulatory Flexibility Analysis

The proposed regulations would affect institutions that participate in title IV, HEA programs, and individual students and loan borrowers. The U.S. Small Business Administration Size Standards define for-profit institutions as "small businesses" if they are independently owned and operated and not dominant in their field of operation with total annual revenue below $7,000,000,and defines nonprofit institutions as small organizations if they are independently owned and operated and not dominant in their field of operation, or as small entities if they are institutions controlled by governmental entities with populations below 50,000. The revenues involved in this sector, the concentration of ownership of institutions by private owners or government systems means that the number of title IV eligible institutions that are small entities. However, the concentration of small entities in the sectors directly affected by this provision and the potential for some of those entities to lose eligibility for title IV aid led to the preparation of this Initial Regulatory Flexibility Analysis.

Description of the reasons that action by the agency is being considered

The Secretary intends to establish by regulation a definition of gainful employment in a recognized occupation by establishing what we consider, for purposes of meeting the requirements of section 102 of the HEA, as amended, to be a reasonable relationship between the loan debt incurred by students in a training program and income from employment after the training. The proposed regulation will clarify, for purposes of establishing a student's eligibility to receive title IV funds, a program's eligibility based on providing training that leads to gainful employment in a recognized occupation. Under the notice of proposed rulemaking published by the Secretary on June 18, 2010, institutions that offer programs that lead to gainful employment will submit information to identify the students attending those programs. The Secretary will require institutions that wish to offer new programs to demonstrate a corresponding interest from

employers, while those that offer existing programs will have to meet outcome requirements based on the loan repayment rates of former students, and debt thresholds comparing educational debt to the average incomes of students that complete the program. An institution must provide a warning to students and prospective students if an eligible program does not pass all of the gainful employment tests.

Student debt is more prevalent and individual borrowers are incurring more debt than ever before. Twenty years ago, only one in six full-time freshmen at four-year public colleges and universities took out a Federal student loan; now more than half do. Today, nearly two-thirds of all graduating college seniors carry student loan debt, up from less than one-half a generation ago. All other things being equal, any former students would be better off leaving college without debt. The less debt, the more they are able to devote to buying a home, saving for retirement or for their children's education, or serving the community. Student loan debt is worth having if it makes it possible to gain the education and training that enhances productivity as a citizen, civic leader, worker or entrepreneur. To the extent that the student loan debt brings little or no benefit to the students (or to society), it is a cost that public policy should attempt to minimize or eliminate. It is in this context that the requirement that a program of study must lead to "gainful employment" can best be understood. The "cost" of excess student debt manifests in three significant ways: payment burdens on the borrower; subsidies from taxpayers; and the negative consequences of default (which falls on the borrower and taxpayers).

The concept of the training leading to gainful employment was intended to ensure that this connection between debt and earnings would not be lost. However, the Department has applied the barest minimum enforcement: when applying to access Federal funds, the institution must check a box that says its programs "prepare students for gainful employment in a recognized occupation."[23] While the Department does audit and review other aspects of program eligibility (such as the length of the program), there is no standard for determining whether a program in fact meets the gainful employment requirement.

As described in the Regulatory Impact Analysis of this NPRM, the trends in graduates' earnings, student loan debt, defaults and repayment underscore the need for the Department to act. The Secretary is proposing a gainful employment standard that would take into consideration repayment rates on Federal student loans, the relationship between total student loan debt and earnings after a postsecondary program, and, in some circumstances, employer endorsements of programs. Chart G summarizes the interaction of the gainful employment tests and the estimated percentage of programs that fall within each category.

[23] The application form is available at http://www.eligcert.ed.gov/ows-doc/eapp.pdf. Most institutions complete an electronic version of the form.

Chart G: Summary of Gainful Employment Tests

Measure		Debt-to-Income		
Total number of programs subject to the proposed regulation	Metric 11,433	Using 3YP: - Above 12% of annual earnings **AND** - Above 30% of discretionary income Using P3YP: - Above 8% of annual earnings **AND** - Above 20% of discretionary income	Using 3YP: -Between 8% and not more than 12% of annual earnings **OR** -Between 20% and not more than 30% of discretionary income Using P3YP: Not Applicable	Using 3YP OR P3YP: -8% or less of annual earnings, **OR** 20% or less of discretionary income
Repayment Rate	At least 45%	Eligible <1%	Eligible <1%	Eligible (No Debt Warning) 39%
	At least 35% and less than 45%	Restricted ---	Restricted 3%	Eligible 26%
	Below 35%	Ineligible 5%	Restricted 4%	Eligible 22%

--- No observations in the source data.

Succinct statement of the objectives of, and legal basis for, the proposed regulation

The proposed regulations are intended to address growing concerns about high levels of loan debt for students enrolled in postsecondary programs that presumptively provide training that leads to gainful employment in a recognized occupation.

The HEA applies different criteria for determining the eligibility of programs and institutions for title IV funds. For public and nonprofit institutions, degree programs of greater than one year in length are generally eligible for title IV aid regardless of the subject or purpose of the program as long as they meet other requirements. In the case of shorter programs and programs of any length at for-profit institutions, eligibility is restricted to programs that "prepare students for gainful employment in a recognized occupation." This difference in eligibility is longstanding and has been retained through many amendments to the HEA. As recently as the HEOA, Congress again adopted the distinct treatment of for-profit institutions while adding an exception for certain liberal arts baccalaureate programs at some for-profit institutions.

Description of and, where feasible, an estimate of the number of small entities to which the proposed regulation will apply

The proposed regulations will apply to programs eligible for title IV funding because they prepare students for gainful employment. At this time, the Department does not have a count of the number of programs offered by institutions. We have estimated that as many as 11,433 programs offered by small entities could be subject to this rule. The proxy used for the number of "programs" is IPEDS Completions data. It counts each instance of a 6-digit CIP code (area of study) by award level. So for example, if an institution awards a certificate in business as well as a bachelor's and a master's, this is counted as 3 separate programs. When aggregating to the 6-digit ID level so that it can be looked at with the repayment data, the number of programs is not unduplicated – it is straight sum of the number of programs for each institution/campus that is represented by the 6-digit OPEID. This may overstate the number of programs subject to the rule, and we welcome comments to help refine this measure, which is less likely to be a factor with small entities than with all programs subject to the rule. As the category of small entities includes some nonprofit institutions regardless of revenues, the wide range of small entities is covered by the rule. This can include institutions with multiple programs, a few of which are covered by the rule, to single-program institutions with well established ties to a local employer base. Many of the programs subject to the regulation are offered by for-profit institutions and public and nonprofit institutions with programs less than two years in length. As demonstrated in Table Q, these sectors have a greater concentration of small entities. Across all sectors, the average total revenue for entities with revenue below $7 million from IPEDS 2007-2008 data is $1,851,281.

Table Q: Institutional Characteristics of Small Entities by Sector

	Number of Institutions with Revenues below $7mn	% of Institutions	% of 12Mo FTE Enrollment	% of Tuition and Fee Revenues
Public 4-Year or Above	4	0.69%	0.02%	0.00%
Private Nonprofit 4 Year	306	21.41%	1.82%	1.00%
Private For-Profit 4-Year	52	24.19%	1.54%	1.09%
Public 2-Year	35	4.07%	0.51%	0.35%
Private Nonprofit 2-Year or Less	174	89.07%	49.99%	44.13%
Private For-Profit 2-Year	402	71.53%	26.29%	20.45%
Public Less than 2-Year	137	91.33%	65.05%	78.13%
Private For-Profit Less than 2-Year	845	89.32%	48.90%	42.87%

Therefore, the Department prepared estimates from the model described in the Regulatory Impact Analysis of this NPRM based exclusively on small entities. The analysis groups institutions by sector, whether they offer one or multiple programs, and by performance on the repayment rate test and then generates total enrollment, revenues, and expenses for the group. Effects are generated according to performance on the repayment test and based on the percentage of programs in that sector likely covered by the rule and other assumptions set out in Table L of the RIA. If a program is considered ineligible based on that first look at the repayment rate, there are five possible outcomes for distributing that student and the associated per-student revenues and expenses. Students could complete the existing program, switch to another program at the same institution, transfer to a program offered by an institution within the same sector, transfer to a program in a different sector, or leave the higher education system. The scenarios described in Table M of the RIA present a range of possible outcomes considered by the Department. Table N presents an estimate of where students transferring out of a sector might continue their education. Applying these assumptions generates a set of effects based on the repayment rates calculated from NSLDS. These amounts are then reduced by applying the percentage in the debt-test adjustment assumptions in Table L to account for performance on the debt measures as seen in the Missouri data. This generates the sector level effects seen in Tables R to R-9. To get the institutional level estimates in Tables S-1 and S-2, the effects were divided by the estimated number of small institutions associated with each group. The Department recognizes that the impact on specific entities may differ greatly from the average institution presented in this analysis, especially if multiple programs at the institution become ineligible. We welcome comments on the applicability of the assumptions to small entities.

The estimates are summarized in Table R, with details by sector presented in Tables R-1 through R-10. Across all sectors, the anticipated tuition and fee revenue removed from the system as students who would have attended programs that lose eligibility elect not to pursue ranges from approximately $17 million to $33 million dollars annually. While the tuition and fee revenue effects are significant, the results of this analysis indicate that opportunities exist for institutions that perform well at preparing students for gainful employment to capture most of the revenue from programs that can no longer offer title IV aid. Across all sectors, the revenues associated with those who remain at institutions that fail the tests to complete programs or switch programs ranges from $129 million to $193 million and transfers from program to program within sectors ranges from approximately $45 million to $82 million.

Table R: Effect of Proposed Regulation Across All Sectors

Effect of Proposed Rule on Impacted Programs, Applying All Tests			
	Scenario 1	Scenario 2	Scenario 3
Programs by Status			
Fully Eligible	9965	9965	9965
Ineligible	700	700	700
New Programs	*	*	*
Restricted	768	768	768
Total	11,433	11,433	11,433
Affected Students by Status			
Fully Eligible	1,382,203	1,385,203	1,393,203
Ineligible	44,000	43,000	44,000
New Programs	*	*	*
Restricted	37,000	35,000	26,000
Total			
Detailed Impact of Ineligible Category			
Programs Ineligible	700	700	700
Students Completing Program	13,000	15,000	22,000
Students Enrolling in Another Program at the Same Institution	8,000	11,000	9,000
Students Enrolling At Another Institution in the Same Sector	13,000	8,000	7,000

Students Leaving Sector	6,000	4,000	3,000
Students Leaving Postsecondary Education	4,000	5,000	3,000
Core Revenues Leaving Institution ($mn)	81.7	53.6	44.6
Core Revenues Leaving Sector ($mn)	36.4	23.9	19.8
Core Revenues Permanently Lost ($mn)	27.1	33.2	16.6
Expenses Leaving Institution ($mn)	31.3	20.5	17.1
Expenses Leaving Sector ($mn)	14.1	9.2	7.7
Expenses Permanently Lost ($mn)	10.4	12.7	6.3
Changes in Federal Pell grants received by students ($mn)	(15.6)	(18.3)	(9.2)
Changes in Federal loans received by students ($mn)	(0.1)	(0.6)	(0.3)
Detailed Impact of Restricted Category			
Restricted Programs	768	768	768
Students Completing Program	17,000	20,000	28,000
Students Enrolling in Another Program at the Same Institution	8,000	12,000	10,000
Students Enrolling At Another Institution in the Same Sector	16,000	11,000	9,000
Students Leaving Sector	8,000	5,000	4,000
Students Leaving Postsecondary Education	5,000	7,000	3,000
Core Revenues Leaving Institution ($mn)	151	100	81
Core Revenues Leaving Sector ($mn)	86	57	46
Core Revenues Permanently Lost ($mn)	54	68	34
Expenses Leaving Institution ($mn)	62	41	33
Expenses Leaving Sector ($mn)	38	24	20
Expenses Permanently Lost ($mn)	23	28	14
Changes in Federal Pell grants received by students ($mn)	(20.6)	(27.0)	(13.3)
Changes in Federal loans received by students ($mn)	(1.4)	(1.7)	(0.8)

Table R-1: Effect of Proposed Rule on Public Institutions that Fail Tests

All Small Public Institutions			
	Scenario 1	**Scenario 2**	**Scenario 3**
Students Leaving System	*	*	*
Students Leaving Sector	*	*	*
Core Revenues Leaving System	17,000	20,000	10,000
Core Revenues Leaving Sector	35,000	23,000	18,000
Expenses Leaving System	10,000	11,000	6,000
Expenses Leaving Sector	21,000	13,000	11,000

***=Rounds to less than 100 students**

Table R-2: Effect of Proposed Rule on Public Institutions that Pass Tests

All Small Public Institutions			
	Scenario 1	Scenario 2	Scenario 3
Students Gained from Other Sectors	2,000	2,000	2,000
Tuition and Fee Revenues Gained from Other Sectors ($ mns)	15.6	10.1	10.5
Expenses from Other Sectors ($ mns)	27.0	17.6	18.3

Table R-3: Effect of Proposed Rule on Private Nonprofit Institutions that Fail Tests

All Small Private, Nonprofit Institutions			
	Scenario 1	Scenario 2	Scenario 3
Students Leaving System	*	*	*
Students Leaving Sector	200	150	150
Core Revenues Leaving System	1,191,000	1,281,000	640,000
Core Revenues Leaving Sector	2,470,000	1,569,000	1,296,000
Expenses Leaving System	564,000	602,000	301,000
Expenses Leaving Sector	1,166,000	740,000	611,000

*=Rounds to less than 100 students

Table R-4: Effect of Proposed Rule on Private Nonprofit Institutions that Pass Tests

All Small Private, Nonprofit Institutions			
	Scenario 1	Scenario 2	Scenario 3
Students Gained from Other Sectors	1,000	1,000	1,000
Tuition and Fee Revenues Gained from Other Sectors ($ mns)	43.0	28.0	23.5
Expenses from Other Sectors ($ mns)	54.4	35.4	29.7

Table R-5: Effect of Proposed Rule on Private For-Profit 4-Year Institutions that Fail Tests

Private For-Profit 4-Year

	Scenario 1	Scenario 2	Scenario 3
Students Leaving System	300	300	200
Students Leaving Sector	200	150	150
Core Revenues Leaving System ($ mns)	3.2	4.2	2.1
Core Revenues Leaving Sector ($ mns)	4.3	2.8	2.3
Expenses Leaving System ($ mns)	1.3	1.7	0.8
Expenses Leaving Sector ($ mns)	1.7	1.1	0.9

Table R-6: Effect of Proposed Rule on Private For-Profit 4-Year Institutions that Pass Tests

Private For-Profit 4-Year			
	Scenario 1	Scenario 2	Scenario 3
Students Gained from Other Sectors	900	600	500
Tuition and Fee Revenues Gained from Other Sectors ($ mns)	16.8	10.9	9.2
Expenses from Other Sectors ($ mns)	7.8	5.1	4.3

Table R-7: Effect of Proposed Rule on Private For-Profit 2-Year Institutions that Fail Tests

Private For-Profit 2-Year			
	Scenario 1	Scenario 2	Scenario 3
Students Leaving System	2,900	3,300	1,700
Students Leaving Sector	3,700	2,400	2,000
Core Revenues Leaving System ($ mns)	20.2	23.8	11.9
Core Revenues Leaving Sector ($ mns)	26.2	17.1	14.4
Expenses Leaving System ($ mns)	7.6	8.9	4.5
Expenses Leaving Sector ($ mns)	9.9	6.4	5.4

Table R-8: Effect of Proposed Rule on Private For-Profit 2-Year Institutions that Pass Tests

Private For-Profit 2-Year			
	Scenario 1	Scenario 2	Scenario 3
Students Gained from Other Sectors	500	300	300
Tuition and Fee Revenues Gained from Other Sectors ($ mns)	6.9	4.5	3.7
Expenses from Other Sectors ($ mns)	4.0	2.6	2.2

Table R-9: Effect of Proposed Rule on Private For-Profit Less-than 2-Year Institutions that Fail Tests

Private For-Profit Less than 2-Year			
	Scenario 1	Scenario 2	Scenario 3
Students Leaving System	1,200	1,500	700
Students Leaving Sector	1,600	1,000	900
Core Revenues Leaving System ($ mns)	6.0	8.2	4.1
Core Revenues Leaving Sector ($ mns)	8.1	5.4	4.4
Expenses Leaving System ($ mns)	2.3	3.1	1.6
Expenses Leaving Sector ($ mns)	3.1	2.1	1.7

Table R-10: Effect of Proposed Rule on Private For-Profit Less-than-2-Year Institutions that Pass Tests

Private For-Profit Less than 2-Year			
	Scenario 1	Scenario 2	Scenario 3
Students Gained from Other Sectors	400	300	200
Tuition and Fee Revenues Gained from Other Sectors ($ mns)	6.1	3.9	3.3
Expenses from Other Sectors ($ mns)	3.0	1.9	1.6

The estimates in Tables R through R10 present the effects for entities within a given sector. At this point, the Department does not have the program level data or debt to income data for all institutions to specify which programs would fall into the ineligible, restricted, and unrestricted groups. Based on the repayment rate and debt to income data we do have available, we expect that small entities falling in the ineligible group are likely to come from the for-profit sectors. Table

S-1 presents the estimated effects for an average ineligible institution in these sectors while Table S-2 presents the effects for an average small entity in a restricted status.

Table S-1: Per-Institution Effect of Proposed Rule on Small Private For-Profit Institutions that Fail Tests

Private For-Profit 4-Year			
	Scenario 1	Scenario 2	Scenario 3
Students Leaving System	25	32	16
Students Leaving Sector	47	31	32
Core Revenues Leaving System	475,000	547,300	784,800
Core Revenues Leaving Sector	372,900	483,200	241,600
Expenses Leaving System	149,300	191,300	95,600
Expenses Leaving Sector	196,900	130,200	134,200

Private For-Profit 2-Year			
	Scenario 1	Scenario 2	Scenario 3
Students Leaving System	25	28	14
Students Leaving Sector	45	29	31
Core Revenues Leaving System	224,700	265,300	132,600
Core Revenues Leaving Sector	291,600	190,000	198,400
Expenses Leaving System	84,800	99,500	49,700
Expenses Leaving Sector	109,900	71,500	74,700

Private For-Profit less than 2-Year			
	Scenario 1	Scenario 2	Scenario 3
Students Leaving System	27	34	17
Students Leaving Sector	51	33	35
Core Revenues Leaving System	175,500	241,700	120,900
Core Revenues Leaving Sector	236,600	158,800	163,000
Expenses Leaving System	67,000	91,100	45,600
Expenses Leaving Sector	89,900	60,200	61,800

Table S-2: Per-Institution Effect of Proposed Rule on Small Private For-Profit Institutions that are in Restricted Status

Private For-Profit 4-Year	Scenario 1	Scenario 2	Scenario 3
Students Leaving System	22	27	14
Students Leaving Sector	40	27	27
Core Revenues Leaving System	376,200	491,800	245,900
Core Revenues Leaving Sector	499,200	331,400	341,100
Expenses Leaving System	150,400	194,900	97,500
Expenses Leaving Sector	199,100	131,900	135,800

Private For-Profit 2-Year	Scenario 1	Scenario 2	Scenario 3
Students Leaving System	23	29	15
Students Leaving Sector	44	29	30
Core Revenues Leaving System	270,000	353,900	176,900
Core Revenues Leaving Sector	360,800	240,700	249,300
Expenses Leaving System	100,900	131,000	65,500
Expenses Leaving Sector	134,500	89,500	92,800

Private For-Profit less than 2-Year	Scenario 1	Scenario 2	Scenario 3
Students Leaving System	20	28	14
Students Leaving Sector	40	27	27
Core Revenues Leaving System	184,300	276,100	138,100
Core Revenues Leaving Sector	255,100	174,400	178,100
Expenses Leaving System		104,900	52,500

	70,400		
Expenses Leaving Sector	97,300	66,500	67,900

One issue not specifically addressed in the proposed regulation is the treatment of small entities under the debt measures. To develop the data necessary to calculate the debt measures, the Department will be entering into a data matching agreement with another Federal agency that has income data. The data matching agreement will not permit us to be able to identify individual program completer's income. Therefore, we will need to assure that data for particular individuals will not be identifiable. To ensure individual data are not identifiable, we will need to suppress small cell sizes based on the requirements of the other Federal agency. We anticipate for small entities we will need to roll up data first from 6 to 4 digit CIP codes, then from 4 to 2 digit CIP code families, then to the entire institution. If this process still does not result in sufficient observations to ensure that an individual's personally identifiable is not disclosed, we will aggregate years of data. Ultimately, if there are insufficient observations, we will not be able to assess an institution's performance against the debt measures.

The Department welcomes comments on the assumptions used in developing these estimates and the anticipated effects of the provision on small entities. The data and methods underlying these estimates will be available at http://www2.ed.gov/policy/highered/reg/hearulemaking/2009/integrity.html. Information received will be considered in development of the final regulation.

Description of the projected reporting, recordkeeping and other compliance requirements of the proposed regulation, including an estimate of the classes of small entities that will be subject to the requirement and the type of professional skills necessary for preparation of the report or record

Table T relates the estimated burden of each paperwork requirement to the hours and costs estimated in the Paperwork Reduction Act section of this NPRM. This additional workload is discussed in more detail under the Paperwork Reduction Act of 1995 section of the preamble. Additional workload would normally be expected to result in estimated costs associated with either the hiring of additional employees or opportunity costs related to the reassignment of existing staff from other activities. In total, these proposed changes are estimated to increase burden on small institutions participating in the title IV student assistance programs by 43,612 hours per year. The monetized cost of this additional burden on institutions, using wage data developed using Bureau of Labor Statistics available at http://www.bls.gov/ncs/ect/sp/ecsuphst.pdf, is $903,212. This cost was based on an hourly rate of $20.71 that was used to reflect increased management time to establish new data collection procedures associated with the gainful employment provisions.

Table T: Estimated Paperwork Burden for Small Entities

Provision	Reg. Section	OMB Control #	Hours	Costs	Hours Per Inst.	Cost per Inst.
Report CIP codes for students who enter repayment in prior four FFYs	668.7(a)(3)(viii)	OMB 1845-NEW4	25,620	530,582	2.2	46.4
Information to calculate debt measure for completers from P3YP	668.7(c)	OMB 1845-NEW4	1,877	38,881	0.2	3.4
Student notification of potential financial burden	668.7(d)	OMB 1845-NEW4	188	3,888	0.3	5.2
Enrollment plan and employer documentation for restricted programs	668.7(e)	OMB 1845-NEW4	5,281	109,362	7.1	146.2
Employer affirmations and debt warning for ineligible institutions outside of the first-year cap	668.7(f)	OMB 1845-NEW4	5,324	110,250	7.7	157.5
New program research and proposals	668.7(h)	OMB 1845-NEW4	5323.5	110249.7	8.2	169.6

The largest burden comes from reporting CIP codes for all students entering repayment in the prior four FFYs. Additional burden comes from reporting the following information for the students who completed during the prior three-year period including the student's CIP code, the completion date, the amount of private educational loans, and the amount of debt incurred from institutional financing plans to facilitate the calculation of the alternative debt threshold. Under §668.7(d), if a program exceeds the debt threshold, the Secretary notifies the institution that it must include a prominent warning in its promotional, enrollment, registration, and other materials describing the program, including those on its Web site, designed and intended to alert prospective and currently enrolled students that they may have difficulty repaying loans obtained for attending that program.

As described in the Paperwork Reduction Act section of the NPRM, in proposed §668.7(e)(2), whenever an institution offers a new program, it will be required to submit: (1) documentation of the approval of a substantive change by its accrediting agency or an explanation of why the new program does not constitute a substantive change, (2) projected student enrollment for the next five years for each location of the institution that will offer the program, and (3) documentation from employers not affiliated with the institution affirming that the curriculum for the new program aligns with recognized occupations at those employers' businesses. The number,

locations, and size of the employers would need to be commensurate with the anticipated size of the program.

In addition to the reporting requirements described in this NPRM, institutions are required to submit information annually that would include identifying information about each student who completed a program that prepares a student for gainful employment, the CIP code for that program, the date the student completed the program, and the amounts the student received from private educational loans and institutional financing programs. Institutions would have to disclose on their Web site information about the occupations that its programs prepare students to enter, information from DOL's O-Net data about the job tasks and expected salaries. In addition, the institution would also have to report the costs for tuition and fees, room and board, and other associated institutional costs typically incurred by students enrolling in these programs; graduation rates; placement rates; and median debt rate information about title IV, HEA loans and private loan as provided by the Department to the institution. A description of these requirements and the estimated burden and costs associated with them is provided in the Program Integrity NPRM published in the Federal Register on Federal Register on June 18, 2010 and available at http://edocket.access.gpo.gov/2010/pdf/2010-14107.pdf. The estimated hours and costs of those requirements were 82,637 and approximately $1,711,818.

Identification, to the extent practicable, of all relevant Federal regulations that may duplicate, overlap or conflict with the proposed regulation

The proposed regulation is unlikely to conflict with or duplicate existing Federal regulations. Under existing law and regulations, institutions are required to disclose data in a number of areas related to the proposed regulation. Among the information that institutions must disclose is price information including a "net price" calculator and a pricing summary page.

Alternatives Considered

As described above, the Department evaluated the proposed regulation for its effect on different types of institutions, including the small entities that comprise approximately 40% of title IV eligible institutions subject to this regulation. As discussed in the RIA, several alternatives were considered, including the use of graduation and placement rates, disclosure alone, an index of factors, default rates, and higher thresholds for the repayment rate. Default rates are not used because a low default rate is not synonymous with a low debt burden. As noted earlier, forbearance, deferments for economic hardship and unemployment, and income-contingent and income-based repayment are important consumer protections that help keep former students out of default. Therefore, cohort default rates, alone, are not an adequate standard for assessment whether a program prepares students for gainful employment. Disclosure alone cannot serve as a standard for determining whether a program complies with the gainful employment requirement in the statute. For example, with a disclosure approach an institution might report that one of its programs did not place a single graduate into a job, yet the program would remain eligible as "preparing students for gainful employment in a recognized occupation" because it disclosed the fact that it had failed to do so. For graduation and placement rates, non-Federal negotiators raised concerns about the ability of institutions to obtain valid placement information from graduates and employers. In the other package of regulations we are proposing disclosure of program-level graduation and placement rates. Based on the information we have available, using them as a

measure of gainful employment would be premature. No specific proposal was considered for an index, nor is it clear how such an index would logically measure gainful employment. Furthermore, one should be cautious about assuming that an institution enrolling lower-income students should necessarily have lower expectations for the future employment or earnings of graduates. An index could be a good approach to provide incentives, perhaps as a method of distributing funds in a program. While we find the concept appealing, we are not convinced that it is appropriate for this task.

As the analysis and comments from non-Federal negotiators shaped the proposal, alternatives were developed that reduced the proposal's negative effects. These alternatives include a delayed effective date for the gainful employment standard, an ability of institutions to request that a program's repayment rate be evaluated for those three years further along in their careers, a cap limiting the number of programs that could lose eligibility in the first year after the regulation takes effect to the lowest-performing programs producing no more than five percent of completers during the prior award year, increased debt-to-income limits, and a decreased payment rate threshold. These alternatives are not specifically targeted at small entities, but the delayed effective date and initial cap on the regulation's effect will provide time for small entities to adapt to the regulation. The Department welcomes comments from small entities on the alternatives presented and requests data to support analysis of the rule and proposed alternatives for the effect on small entities. Information received will be considered in development of the final regulation.

[FR Doc. 2010–17845 Filed 7–23–10; 8:45 am]
BILLING CODE 4000–01–C



Federal Register

Monday,
July 26, 2010

Part III

Railroad Retirement Board

Privacy Act of 1974; New and Revised Systems of Records; Notice

RAILROAD RETIREMENT BOARD

Privacy Act of 1974; New and Revised Systems of Records

AGENCY: Railroad Retirement Board.

ACTION: Notice: Publication of New and Revised Systems of Records and Standard Disclosures.

SUMMARY: The purpose of this document is to republish and update all existing systems of records in their entirety, to change the name of one system of records and to publish three new systems of records.

DATES: These changes become effective as proposed without further notice on September 24, 2010. We will file a report of these Systems of Records Notices with the Committee on Homeland Security and Governmental Affairs of the Senate; the Committee on Oversight and Government Reform of the House of Representatives; and the Office of Information and Regulatory Affairs, Office of Management and Budget (OMB).

ADDRESSES: Send comments to Beatrice Ezerski, Secretary to the Board, Railroad Retirement Board, 844 North Rush Street, Chicago, Illinois 60611–2092.

FOR FURTHER INFORMATION CONTACT: Mr. Timothy Grant, Chief Privacy Officer, Railroad Retirement Board, 844 North Rush Street, Chicago, Illinois 60611–2092; telephone 312–751–4869, or e-mail at *tim.grant@rrb.gov.*

SUPPLEMENTARY INFORMATION: Three new systems of records are included in this notice: RRB–56, Employee Service and Railroad Employer Coverage Determination Files, RRB–57, Employee Emergency Notification System and RRB–58, Employee Tuition Assistance Program (TAP).

We are changing the name of one system of records: RRB–19, Payroll & Cost Accounting System, is being renamed "Transit Benefit Program Records System." The RRB transferred all pay operations over to the General Services Administration (GSA) National Payroll Center in June 2004. The RRB now only manages payroll deductions for employee transit benefits.

All other existing systems of records have been generally updated for names, titles and other minor changes as a result of the periodic system of records review and to correct inaccuracies in the last privacy issuances by the Government Printing Office. Concerning safeguarding and disposal of all systems of records, the RRB follows Federal Law and Regulations, the National Institute of Science and Technology (NIST) guidelines and best practices, as appropriate. Also, the routine uses in each system of records have been updated to reflect the establishment of RRB standard disclosures.

By Authority of the Board.

Beatrice Ezerski,

Secretary to the Board.

RAILROAD RETIREMENT BOARD (RRB) SYSTEMS OF RECORDS

RRB–1	Social Security Benefit Vouchering System
RRB–2	[Reserved]
RRB–3	Medicare, Part B
RRB–4	Estimated Annuity, Total Compensation and Residual Amount File
RRB–5	Master File of Railroad Employees' Creditable Compensation
RRB–6	Unemployment Insurance Record File
RRB–7	Applications for Unemployment Benefits and Placement Service Under the Railroad Unemployment Insurance Act
RRB–8	Railroad Retirement Tax Reconciliation System (Employee Representatives)
RRB–9	[Reserved]
RRB–10	Legal Opinion and Correspondence Files
RRB–11	Files on Concluded Litigation
RRB–12	Railroad Employees' Registration File
RRB–13–15	[Reserved]
RRB–16	Social Security Administration Master Earnings File
RRB–17	Appeal Decisions from Initial Denials for Benefits Under the Provisions of the Railroad Retirement Act or the Railroad Unemployment Insurance Act
RRB–18	Miscellaneous Payments Posted to General Ledger
RRB–19	(Renamed) Transit Benefit Program Records System
RRB–20	Health Insurance and Supplementary Medical Insurance Enrollment and Premium Payment System (Medicare)
RRB–21	Railroad Unemployment and Sickness Insurance Benefit System
RRB–22	Railroad Retirement, Survivor, and Pensioner Benefit System
RRB–23–25	[Reserved]
RRB–26	Payment, Rate and Entitlement History File
RRB–27	Railroad Retirement Board-Social Security Administration Financial Interchange
RRB–28	[Reserved]
RRB–29	Railroad Employees' Annual Gross Earnings Master File
RRB–30–32	[Reserved]
RRB–33	Federal Employee Incentive Awards System
RRB–34	Employee Personnel Management Files
RRB–35	[Reserved]
RRB–36	Complaint, Grievance, Disciplinary and Adverse Action Files
RRB–37–41	[Reserved]
RRB–42	Overpayment Accounts
RRB–43	Investigation Files
RRB–44–45	[Reserved]
RRB–46	Personnel Security Files
RRB–47	[Reserved]
RRB–48	Physical Access Management System
RRB–49	Telephone Call Detail Records
RRB–50	Child Care Tuition Assistance Program
RRB–51	Railroad Retirement Board's Customer PIN/Password (PPW) Master File System
RRB–52	Board Orders
RRB–53	Employee Medical and Eye Examination Reimbursement Program
RRB–54	Virtual Private Network (VPN) Access Management
RRB–55	Contact Log

RAILROAD RETIREMENT BOARD (RRB) SYSTEMS OF RECORDS—Continued

RRB–56	New—Employee Service and Railroad Employer Coverage Determination Files
RRB–57	New—Employee Emergency Notification System
RRB–58	New—Employee Tuition Assistance Program (TAP)

Prefatory Statement Concerning RRB Standard Disclosures

Beside those disclosures provided under 5 U.S.C. 552a(b) of The Privacy Act which pertain generally to all of the RRB systems of records, the RRB implemented in their 2007 **Federal Register** notice, certain standard disclosures which apply to all systems of records, unless specifically excluded in a system notice. These standard disclosures are in addition to the particular routine uses listed under each system of records, as follows:

Standard Disclosure 1.—Congressional. Disclosure may be made to a congressional office from the record of an individual in response to an inquiry from the congressional office made at the request of that individual if that individual would not be denied access to the information.

Standard Disclosure 2.—Presidential. Disclosure of relevant information from the record of an individual may be made to the Office of the President in response to an inquiry from that office made at the request of that individual or a third party on the individual's behalf if that individual would not be denied access to the information.

Standard Disclosure 3.—Contractors working for Federal Government. Disclosure may be made to contractors, grantees, experts, consultants, students, and others performing or working on a contract, service, grant, cooperative agreement, or other assignment for the Federal government, to the extent necessary to accomplish an RRB function related to that system of records.

Standard Disclosure 4.—Law Enforcement. Disclosure may be made to the appropriate agency, whether Federal, State, local, or foreign, charged with the responsibility of investigating, enforcing, or prosecuting a violation or potential violation of law, whether civil, criminal or regulatory in nature, and whether arising by general statute or particular program statute, or by regulation, rule or order issued pursuant thereto, or charged with enforcing or implementing the statute, rule, regulation, or order issued pursuant thereto, if the disclosure would be to an agency engaged in functions related to the Railroad Retirement Act or the Railroad Unemployment Insurance Act, or if disclosure would be clearly in the furtherance of the interest of the subject individual.

Standard Disclosure 5.—Breach Notification. Disclosure may be made, to appropriate agencies, entities, and persons when (1) The Railroad Retirement Board suspects or has confirmed that the security or confidentiality of information in the system of records has been compromised; (2) the Railroad Retirement Board has determined that as a result of the suspected or confirmed compromise there is a risk of harm to economic or property interests, identity theft or fraud, or harm to the security or integrity of this system or other systems or programs (whether maintained by the Railroad Retirement Board or another agency or entity) that rely upon the compromised information; and (3) the disclosure made to such agencies, entities, and persons is reasonably necessary to assist in connection with the Railroad Retirement Board's efforts to respond to the suspected or confirmed compromise and prevent, minimize, or remedy such harm.

Standard Disclosure 6.— National Archives. Disclosure may be made to the National Archives and Records Administration or other Federal government agencies for records management inspections being conducted under the authority of 44 U.S.C. 2904 and 2906.

Standard Disclosure 7.—Attorney Representative. Disclosure of non-medical information in this system of records may be made to the attorney representing such individual upon receipt of a written letter or declaration stating the fact of representation, if that individual would not be denied access to the information. Medical information may be released to an attorney when such records are requested for the purpose of contesting a determination either administratively or judicially.

* * * * *

RRB–1

SYSTEM NAME:

Social Security Benefit Vouchering System.

SYSTEM LOCATION:

U.S. Railroad Retirement Board, 844 Rush Street, Chicago, Illinois 60611.

SECURITY CLASSIFICATION:

None.

CATEGORIES OF INDIVIDUALS COVERED BY THE SYSTEM:

Applicants after December 31, 1974, for benefits under Title II of the Social Security Act who have completed ten years or at least five years after 1995 of creditable service in the railroad industry, the spouse and/or divorced spouse or survivor of such an individual.

CATEGORIES OF RECORDS IN THE SYSTEM:

Name, address, Social Security number, RRB claim number, type and amount of benefit, suspension and termination information.

AUTHORITY FOR MAINTENANCE OF THE SYSTEM:

Section 7(b)(2) of the Railroad Retirement Act of 1974 (45 U.S.C. 231f(b)(2)).

PURPOSE(S):

Records in the Social Security Vouchering System are maintained to administer Title II of the Social Security Act with respect to payment of benefits to individuals with 10 or more years or at least five years after 1995 of railroad service and their families.

ROUTINE USES OF RECORDS MAINTAINED IN THE SYSTEM, INCLUDING CATEGORIES OF USERS, AND THE PURPOSES OF SUCH USES:

a. Benefit rate information may be disclosed to primary beneficiaries regarding secondary beneficiaries (or vice versa) when the addition of such beneficiary affects either the entitlement or benefit payment.

b. In the event the Board has determined to designate a person to be the representative payee of an incompetent beneficiary, disclosure of information concerning the benefit amount and other similar information may be made to the representative payee from the record of the individual.

c. Benefit rates, names and addresses may be released to the Department of Treasury to control for reclamation and return of outstanding benefit payments, to issue benefit payments, act on reports of non-receipt, to insure delivery of payments to the correct address of the beneficiary or representative payee or to proper financial organization, and to investigate alleged forgery, theft or unlawful negotiation of railroad retirement for social security benefit checks or improper diversion of payments directed to a financial organization.

d. Beneficiary's name, address, check rate and date plus supporting evidence may be released to the U.S. Postal Service for investigation of alleged forgery or theft of railroad retirement or social security benefit checks.

e. Beneficiary identifying information, effective date, benefit rates, and months paid may be furnished to the Veterans Administration for the purpose of assisting that agency in determining eligibility for benefits or verifying continued entitlement to and the correct amount of benefits payable under programs which it administers.

f. Benefit rates and effective dates may be disclosed to the Social Security Administration, Bureau of Supplemental Security Income, to Federal, State and local welfare or public aid agencies to assist them in processing applications for benefits under their respective programs.

g. Last addresses information may be disclosed to the Department of Health and Human Services in conjunction with the Parent Locator Service.

h. Benefit rates, entitlement and other necessary information may be released to the Department of Labor in conjunction with payment of benefits under the Federal Coal Mine and Safety Act.

i. Pursuant to a request from an employer covered by the Railroad Retirement Act or the Railroad Unemployment Insurance Act or from an organization under contract to an employer or employers, information regarding the Board's payment of benefits, the methods by which such benefits are calculated, entitlement data and present address may be released to the requesting employer or the organization under contract to the employer or employers for the purposes of determining entitlement to and the rates of private supplemental pension benefits and to calculate estimated benefits due.

j. If a request for information pertaining to an individual is made by an official of a labor organization of which the individual is a member and the request is made on behalf of the individual, information from the record of the individual concerning his benefit or anticipated benefit and concerning the method of calculating that benefit may be disclosed to the labor organization official.

k. Records may be disclosed to the Government Accountability Office for auditing purposes and for collection of debts arising from overpayments under Title II of the Social Security Act, as amended.

l. Records may be disclosed in a court proceeding relating to any claims for benefits by the beneficiary under the Railroad Retirement Act and may be disclosed during the course of an administrative appeal to individuals who need the records to prosecute or decide the appeal or to individuals who are requested to provide information relative to an issue involved in the appeal.

m. For payments made after December 31, 1983, beneficiary identifying information, address, amounts of benefits paid and repaid, beneficiary withholding instructions, and amounts withheld by the RRB for tax purposes may be furnished to the Internal Revenue Service for tax administration.

n. Beneficiary identifying information, entitlement data, and benefit rates may be released to the Department of State and embassy and consular officials, to the American Institute on Taiwan, and to the Veterans Administration Regional Office, Philippines, to aid in insuring the continued payment of beneficiaries living abroad.

o. Entitlement data and benefit rates may be released to any court, state, agency, or interested party, or to the representative of such court, state agency, or interested party, in connection with contemplated or actual legal or administrative proceeding concerning domestic relations and support matters.

DISCLOSURE TO CONSUMER REPORTING AGENCIES:

None.

POLICIES AND PRACTICES FOR STORING, RETRIEVING, ACCESSING, RETAINING, AND DISPOSING OF RECORDS IN THE SYSTEM:

STORAGE:

Paper, microforms, magnetic tape and magnetic disk.

RETRIEVABILITY:

Social Security account number, full name.

SAFEGUARDS:

Paper and Microforms: Maintained in areas not accessible to the public in metal filing cabinets. Offices are locked during non-business hours. Building has 24-hour on-site security officers, closed circuit television monitoring and intrusion detection systems.

Magnetic tape and magnetic disk: Computer and computer storage rooms are restricted to authorized personnel; on-line query safeguards include a lock/unlock password system, a terminal oriented transaction matrix, role-based access controls and audit trail. For electronic records, system securities are established in accordance with National Institute of Standards and Technology (NIST) guidelines, including network monitoring, defenses in-depth, incident response and forensics. In addition to the on-line query safeguards, they include encryption of all data transmitted and exclusive use of leased telephone lines.

RETENTION AND DISPOSAL:

Paper: Individual claim folders with records of all actions pertaining to the payment of claims are transferred to the Federal Records Center, Chicago, Illinois, 5 years after the date of last payment or denial activity if all benefits have been paid, no future eligibility is apparent and no erroneous payments are outstanding.

The claim folder is destroyed 25 years after the date it is received in the center. Accounts receivable listings and checkwriting operations daily activity listings are transferred to the Federal Records Center 1 year after date of issue and are destroyed 6 years and 3 months after receipt at the center. Other paper listings are destroyed 1 year after the date of issue. Changes of address source documents are destroyed after 1 year.

Microforms: Originals are kept for 3 years, transferred to the Federal Records Center and destroyed when 8 years old. One duplicate copy is kept 2 years and destroyed by shredding. All other duplicate copies are kept 1 year and destroyed in accordance with NIST guidelines.

Magnetic tape: Tapes are updated at least monthly. For disaster recovery purposes, certain tapes are stored for 12–18-month periods.

Magnetic disk: Continually updated and permanently retained. When magnetic disk or other electronic media is no longer servicable, it is sanitized in accordance with NIST guidelines.

SYSTEM MANAGER(S) AND ADDRESS:

Office of Programs—Director of Policy and Systems, Railroad Retirement Board, 844 Rush Street, Chicago, Illinois 60611–2092.

NOTIFICATION PROCEDURE:

Requests for information regarding an individual's records should be in writing, including full name, Social Security number and railroad retirement claim number (if any) of the individual. Before any information about any record will be released, the individual may be required to provide proof of identity, or authorization from the individual to permit release of information. Such requests should be sent to: Office of Programs—Director of Operations, Railroad Retirement Board, 844 Rush Street, Chicago, Illinois 60611–2092.

RECORD ACCESS PROCEDURE:

See Notification section above.

CONTESTING RECORD PROCEDURE:

See Notification section above.

RECORD SOURCE CATEGORIES:

Individual applicant or his or her authorized representative, the Social Security Administration, other record systems maintained by the Railroad Retirement Board.

EXEMPTIONS CLAIMED FOR THE SYSTEM:

None.

* * * * *

RRB–2 [Reserved]

* * * * *

RRB–3

SYSTEM NAME:

Medicare: Part B (Supplementary Medical Insurance Payment System—Contracted to Palmetto Government Benefits Administrators).

SYSTEM LOCATION:

Main Office: Palmetto Government Benefit Administrators, 17 Technology Circle, Columbia, South Carolina 29203–9591;

Regional Office: P.O. Box 10066, Augusta, Georgia 30999.

SECURITY CLASSIFICATION:

None.

CATEGORIES OF INDIVIDUALS COVERED BY THE SYSTEM:

Qualified railroad retirement beneficiaries covered by Medicare, Part B, who file claims under the medical insurance program.

CATEGORIES OF RECORDS IN THE SYSTEM:

Name, health insurance claim number, address, date of birth, telephone number, description of illness and treatment pertaining to claim, indication of other health insurance or medical assistance pertinent to claim, date(s) and place(s) of physician service, description of medical procedures, services or supplies furnished, nature of illness(es), medical charges, name, address and telephone of physician, identifying number of provider, designation of payee, Part B entitlement date, Part B deductible status and amount of payment to beneficiary or payee.

AUTHORITY FOR MAINTENANCE OF THE SYSTEM:

Section 7(d) of the Railroad Retirement Act of 1974 (45 U.S.C. 231f(d)).

PURPOSE(S):

Records in this system are maintained to administer the supplementary medical insurance (Part B) portion of Medicare under Title XVIII of the Social Security Act for qualified railroad retirement beneficiaries.

ROUTINE USES OF RECORDS MAINTAINED IN THE SYSTEM, INCLUDING CATEGORIES OF USERS, AND THE PURPOSES OF SUCH USES:

a. In the event the Board has determined to designate a person to be the representative payee of an incompetent beneficiary, disclosure of information concerning the benefit amount and other similar information may be made to the representative payee from the record of the individual.

b. Information regarding payments and deductibles may be released to the Department of Health and Human Services for use in administering Title XVIII of the Social Security Act, as amended, and to establish, audit, and maintain account and vouchering records.

c. Records may be disclosed in a court proceeding relating to any claims for benefits under Title XVIII of the Social Security Act and may be disclosed during the course of an administrative appeal hearing to individuals who need the records to prosecute or decide the appeal or to individuals who are requested to provide information relative to an issue involved in the appeal.

d. Records may be disclosed to the General Accountability Office for auditing purposes and for collection of debts arising from overpayments under Title XVIII of the Social Security Act.

e. Pursuant to a request from an employer covered by the Railroad Retirement Act or the Railroad Unemployment Insurance Act, information regarding the status of a qualified railroad retirement beneficiary's enrollment in Medicare and premium payment status may be released to the requesting employer for the purposes of coordinating employee supplemental welfare benefits.

f. If a request for information pertaining to an individual is made by an official of a labor organization of which the individual is a member and the request is made on behalf of the individual, information from the record of the individual concerning his or her entitlement and premium status may be disclosed to the labor organization official.

g. Information may be furnished to the U.S. Postal Service and to State and local police authorities for investigation of the loss, theft, and/or forgery of Medicare checks.

h. Information may be furnished to the State licensing boards for review of unethical practices or nonprofessional conduct. When such information has been disclosed to a State licensing board, it may also be disclosed when requested to State agencies investigating such conduct under Titles V and XIX of the Social Security Act and to the TRICARE (Military Health Care System) organization and to TRICARE contractors that are not also Medicare contractors.

i. General guidelines dealing with length of stay, diagnosis and other criteria used in the claims process to establish the basis for payment may be disclosed to the requester. Information regarding physicians' prevailing or customary charges may be furnished.

j. The following general types of information may be disclosed to Title XIX agencies (to a state agency or to a carrier acting for a State agency charged with administration of a program under Title XIX): Physician, other practitioner and supplier identification numbers, and charges of physicians or other practitioners or suppliers for services furnished to beneficiaries.

k. Information on such matters as entitlement, benefit payment, or benefit utilization relating to an individual may be disclosed to any State agency or to a carrier acting for a State agency charged with the administration of a program under Title XIX. Note: Disclosure to State agencies administering other Federal grants-in-aid programs requires the authorization of the beneficiary or his/her legal representative.

DISCLOSURE TO CONSUMER REPORTING AGENCIES:

None.

POLICIES AND PRACTICES FOR STORING, RETRIEVING, ACCESSING, RETAINING, AND DISPOSING OF RECORDS IN THE SYSTEM:

STORAGE:

Paper, microforms, magnetic tape and magnetic disk.

RETRIEVABILITY:

Health insurance claim number, name.

SAFEGUARDS:

The insurance company is bound by the contract set forth by the Railroad Retirement Board which contains specific instruction regarding its responsibility in claim information handled and released, and by guidance and procedures issued by the Centers for Medicare & Medicaid Services (CMS). It is also bound by the same regulations regarding disclosure and security of information as the Board itself.

RETENTION AND DISPOSAL:

Records are maintained by the insurance company office for 27 months. At the end of 27 months the material is sent to the storage areas maintained by the insurance company. Records are retained and stored in accordance with guidelines issued by CMS.

SYSTEM MANAGER(S) AND ADDRESS:

Office of Programs—Director of Policy and Systems, Railroad Retirement Board, 844 Rush Street, Chicago, Illinois 60611–2092.

NOTIFICATION PROCEDURE:

Requests for information regarding an individual's record should be in writing, including the full name, Social Security number and railroad retirement claim (if any) of the individual. Before information about any record will be released, the individual may be required to provide proof of identity, or authorization from the individual to permit release of information. Such requests should be sent to: Office of Programs—Director of Operations, Railroad Retirement Board, 844 Rush Street, Chicago, Illinois 60611–2092.

RECORD ACCESS PROCEDURE:

See Notification section above.

CONTESTING RECORD PROCEDURE:

See Notification section above.

RECORD SOURCE CATEGORIES:

Claimant, his/her authorized representative or his/her survivors, the Social Security Administration, the Centers for Medicare & Medicaid Services and its contractors, physicians, and hospitals.

EXEMPTIONS CLAIMED FOR THE SYSTEM:

None.

* * * * *

RRB–4

SYSTEM NAME:

Estimated Annuity, Total Compensation and Residual Amount File.

SYSTEM LOCATION:

U.S. Railroad Retirement Board, 844 Rush Street, Chicago, Illinois 60611–2092.

SECURITY CLASSIFICATION:

None.

CATEGORIES OF INDIVIDUALS COVERED BY THE SYSTEM:

Railroad employees who never filed an application for an annuity, have not been reported to be deceased and who either worked in the current reporting year or have at least 120 months of creditable railroad service or have at least 60 months of creditable railroad service after 1995.

CATEGORIES OF RECORDS IN THE SYSTEM:

For employees with less than 120 months of creditable railroad service, or less than 60 months of creditable railroad service after 1995: Social Security Number (SSN), name, date of birth, sex, cumulative service, cumulative tier 1 compensation, daily pay rate, employer number, gross residual, year last worked, number and pattern of months worked in year last worked, tier 1 compensation for year last worked, tier 2 compensation for year last worked. For railroad employees with 120 or more months of creditable railroad service and for employees with at least 60 months of creditable railroad service after 1995; all of the above information plus estimated annuity data and SSA data.

AUTHORITY FOR MAINTENANCE OF THE SYSTEM:

Section 7(b)(6) of the Railroad Retirement Act of 1974 (45 U.S.C. 231f(b)(6)).

PURPOSE(S):

The primary purpose of the system is to provide field offices with the capability of furnishing annuity estimates to prospective beneficiaries. The system is also used by field offices to provide temporary annuity rates that the Division of Operations may issue to applicants for employee and spouse benefits.

ROUTINE USES OF RECORDS MAINTAINED IN THE SYSTEM, INCLUDING CATEGORIES OF USERS, AND THE PURPOSES OF SUCH USES:

a. Entitlement information may be disclosed to primary beneficiaries regarding secondary beneficiaries (or vice versa) when the addition of such beneficiary affects either the entitlement or benefit payment.

b. Pursuant to a request from an employer covered by the Railroad Retirement Act or the Railroad Unemployment Insurance Act, information regarding the Board's estimated payment of unemployment, sickness or retirement benefits, the methods by which such benefits are calculated and entitlement data may be released to the requesting employer for the purposes of determining entitlement to and the rates of private supplemental pensions, sickness or unemployment benefits and to calculate estimated benefits due.

c. If a request for information pertaining to an individual is made by an official of a labor organization of which the individual is a member and the request is made on behalf of the individual, information from the record of the individual concerning his anticipated benefit and concerning the method of calculating that benefit may be disclosed to the labor organization official.

d. Annuity estimates may be released to any court, state agency, or interested party, or the representative of such court, state agency, or interested party, in connection with contemplated or actual legal or administrative proceeding concerning domestic relations and support matters.

DISCLOSURE TO CONSUMER REPORTING AGENCIES:

None.

POLICIES AND PRACTICES FOR STORING, RETRIEVING, ACCESSING, RETAINING, AND DISPOSING OF RECORDS IN THE SYSTEM:

STORAGE:

On-line mainframe system.

RETRIEVABILITY:

Social Security number.

SAFEGUARDS:

Magnetic tape and magnetic disk: Computer and computer storage rooms are restricted to authorized personnel; on-line query safeguards include a lock/unlock password system, a terminal oriented transaction matrix, role based access controls and audit trail. For electronic records, system securities are established in accordance with National Institute of Standards and Technology (NIST) guidelines, including network monitoring, defenses in-depth, incident response and forensics. In addition to the on-line query safeguards, they include encryption of all data transmitted and exclusive use of leased telephone lines.

RETENTION AND DISPOSAL:

A maximum of three sets of records (the current and prior two sets) are maintained on-line with the oldest set purged when a new set is produced. When magnetic disk or other electronic media is no longer required or servicable, it is sanitized in accordance with NIST guidelines.

SYSTEM MANAGER(S) AND ADDRESS:

Office of Programs—Director of Policy and Systems, Railroad Retirement Board, 844 Rush Street, Chicago, Illinois 60611–2092.

NOTIFICATION PROCEDURE:

Request for information regarding an individual's record should be in writing, including the full name, Social Security number and railroad retirement claim number (if any) of the individual. Before

information about any record will be released, the individual may be required to provide proof of identity, authorization from the individual to permit release of information. Such requests should be sent to: Office of Programs—Director of Operations, Railroad Retirement Board, 844 Rush Street, Chicago, Illinois 60611–2092.

RECORD ACCESS PROCEDURE:

See Notification section above.

CONTESTING RECORD PROCEDURE:

See Notification section above.

RECORD SOURCE CATEGORIES:

Information which is secured from the original master records is made available to all authorized headquarters and field service users.

EXEMPTIONS CLAIMED FOR THE SYSTEM:

None.

* * * * *

RRB–5

SYSTEM NAME:

Master File of Creditable Service and Compensation of Railroad Employees.

SYSTEM LOCATION:

U.S. Railroad Retirement Board, 844 Rush Street, Chicago, Illinois 60611.

SECURITY CLASSIFICATION:

None.

CATEGORIES OF INDIVIDUALS COVERED BY THE SYSTEM:

All individuals with creditable service under the Railroad Retirement and Railroad Unemployment Insurance Acts.

CATEGORIES OF RECORDS IN THE SYSTEM:

Name, Social Security number, RRB claim number, annuity beginning date, date of birth, sex, last employer identification number, amount of daily payrate, separation allowance or severance payment, creditable service and compensation after 1937, home address, and date of death.

AUTHORITY FOR MAINTENANCE OF THE SYSTEM:

Section 7(b)(6) of the Railroad Retirement Act of 1974 (45 U.S.C. 231f(b)(6)) and section 12(l) of the Railroad Unemployment Insurance Act (45 U.S.C. 362(l)).

PURPOSE(S):

The purpose of this system is to store railroad earnings of railroad employees which are used to determine entitlement to and amount of benefits payable under the Railroad Retirement Act, the Railroad Unemployment Insurance Act and the Social Security Act, if applicable. The records are updated daily based on earnings reports received from railroad employers and the Social Security Administration and are stored in the Employment Data Maintenance Application database and the Separation Allowance Lump Sum Award (SALSA) Master File.

ROUTINE USES OF RECORDS MAINTAINED IN THE SYSTEM, INCLUDING CATEGORIES OF USERS, AND THE PURPOSES OF SUCH USES:

a. Records may be transferred to the Social Security Administration to correlate disability freeze actions and in the cases where the railroad employees do not acquire 120 creditable service months before retirement or death or have no current connection with the railroad industry, to enable SSA to credit the employee with the compensation and to pay or deny benefits.

b. Yearly service months, cumulative service months, yearly creditable compensation, and cumulative creditable compensation may be released to the employees directly or through their respective employer.

c. Service months and earnings may be released to employers or former employers for correcting or reconstructing earnings records for railroad employees.

d. Employee identification and potential entitlement may be furnished to the Social Security Administration, Bureau of Supplemental Security Income, to Federal, State, and local welfare or public aid agencies to assist them in processing application for benefits under their respective programs.

e. Employee identification and other pertinent information may be released to the Department of Labor in conjunction with payment of benefits under the Federal Coal Mine and Safety Act.

f. The last employer information may be disclosed to the Department of Health and Human Services in conjunction with the Parent Locator Service.

g. Pursuant to a request from an employer covered by the Railroad Retirement Act or the Railroad Unemployment Insurance Act, information, regarding the employee's potential eligibility for unemployment, sickness or retirement benefits may be released to the requesting employer for the purpose of determining entitlement to and the rates of private supplemental pension, sickness or unemployment benefits and to calculate estimated benefits due from the employer.

h. If a request for information pertaining to an individual is made by an official of a labor organization of which the individual is a member and the request is made on behalf of the individual, information from the record of the individual concerning his anticipated benefit may be disclosed to the labor organization official.

i. Records may be disclosed in a court proceeding relating to any claims for benefits by the beneficiary under the Railroad Retirement Act or the Railroad Unemployment Insurance Act and may be disclosed during the course of an administrative appeal to individuals who need the records to prosecute or decide the appeal or to individuals who are requested to provide information relative to an issue involved in the appeal.

j. All records may be disclosed to the Social Security Administration for purposes of administration of the Social Security Act.

k. Service and compensation and last employer information may be furnished, upon request, to state agencies operating unemployment or sickness insurance programs for the purposes of their administering such programs.

l. The name, address and gender of a railroad worker may be released to a Member of Congress when the Member requests it in order that he or she may communicate with the worker about legislation which affects the railroad retirement or railroad unemployment and sickness insurance program.

m. The service history of an employee (such as whether the employee had service before a certain date and whether the employee had at least a given number of years of service) may be disclosed to AMTRAK when such information would be needed by AMTRAK to make a determination whether to award a travel pass to either the employee or the employee's widow.

DISCLOSURE TO CONSUMER REPORTING AGENCIES:

None.

POLICIES AND PRACTICES FOR STORING, RETRIEVING, ACCESSING, RETAINING, AND DISPOSING OF RECORDS IN THE SYSTEM:

STORAGE:

Paper, Magnetic tape and Magnetic disk.

RETRIEVABILITY:

Social Security number, claim number and name.

SAFEGUARDS:

Paper: Maintained in areas not accessible to the public in metal filing cabinets. Offices are locked during non-business hours. Building has 24 hour on-site security officers, closed circuit

television monitoring and intrusion detection systems.

Magnetic tape and magnetic disk: Computer and computer storage rooms are restricted to authorized personnel; on-line query safeguards include a lock/unlock password system, a terminal oriented transaction matrix, role based access controls and audit trail. For electronic records, system securities are established in accordance with National Institute of Standards and Technology (NIST) guidelines, including network monitoring, defenses in-depth, incident response and forensics. In addition to the on-line query safeguards, they include encryption of all data transmitted and exclusive use of leased telephone lines.

RETENTION AND DISPOSAL:

Paper: Retained five years and destroyed in accordance with NIST guidelines. Previous years ledger put in storage when current year ledger is complete.

Magnetic tape: Magnetic tape records are retained for 90 days and then written over following NIST guidelines. For disaster recovery purposes certain tapes are stored 12–18 months.

Magnetic disk: Continually updated and permanently retained. When magnetic disk or other electronic media is no longer servicable, it is sanitized in accordance with NIST guidelines.

SYSTEM MANAGER(S) AND ADDRESS:

Office of Programs—Director of Policy and Systems, Railroad Retirement Board, 844 Rush Street, Chicago, Illinois 60611–2092.

NOTIFICATION PROCEDURE:

Requests for information regarding an individual's record should be in writing, including the full name, Social Security number and railroad retirement claim number (if any) of the individual. Before any information about any record will be released, the individual may be required to provide proof of identity, or authorization from the individual to permit release of information. Such requests should be sent to: Office of Programs—Assessment & Training, Chief of Employer Service and Training Center, Railroad Retirement Board, 844 Rush Street, Chicago, Illinois 60611–2092.

RECORD ACCESS PROCEDURE:

See Notification section above.

CONTESTING RECORD PROCEDURE:

See Notification section above.

RECORD SOURCE CATEGORIES:

Railroad employer.

EXEMPTIONS CLAIMED FOR THE SYSTEM:

None.

* * * * *

RRB–6

SYSTEM NAME:

Unemployment Insurance Record File.

SYSTEM LOCATION:

District Offices: See Appendix I for addresses.

SECURITY CLASSIFICATION:

None.

CATEGORIES OF INDIVIDUALS COVERED BY THE SYSTEM:

Claimants for unemployment benefits under the Railroad Unemployment Insurance Act and their respective employers.

CATEGORIES OF RECORDS IN THE SYSTEM:

Development file containing letters from claimants, report of Railroad Unemployment Insurance Act fraud investigations and supporting evidence, erroneous payment investigations, protest and appeal requests and responses.

AUTHORITY FOR MAINTENANCE OF THE SYSTEM:

Section 12(l) of the Railroad Unemployment Insurance Act (45 U.S.C. 362(l))

PURPOSE(S):

This system of records is used for filing general information about applicants for RUIA benefits. If an applicant files for UI benefits, some of the information in this file will be also placed in the claimants UI file.

ROUTINE USES OF RECORDS MAINTAINED IN THE SYSTEM, INCLUDING CATEGORIES OF USERS, AND THE PURPOSES OF SUCH USES:

a. Beneficiary identifying information may be released to third party contacts to determine if incapacity of the beneficiary or potential beneficiary to understand or use benefits exists, and to determine the suitability of a proposed representative payee.

b. Benefit rate, name and address may be referred to the Treasury Department to control for reclamation and return of outstanding benefit checks, to issue benefit checks, reconcile reports of non-delivery, and to insure delivery of payments to the correct address or account of the beneficiary or representative payee.

c. Beneficiary's name, address, payment rate, date and number, plus supporting evidence may be released to the U.S. Postal Service for investigation of alleged forgery or theft of railroad unemployment or sickness benefit payments.

d. Identifying information such as full name, address, date of birth, Social Security number, employee identification number, and date last worked, may be released to any last employer to verify entitlement for benefits under the Railroad Unemployment Insurance Act.

e. Pursuant to a request from an employer covered by the Railroad Retirement Act or the Railroad Unemployment Insurance Act, information regarding the Board's payment of unemployment or sickness benefits, the methods by which such benefits are calculated, entitlement data and present address may be released to the requesting employer for the purposes of determining entitlement to and rates of private supplemental pension, sickness or unemployment benefits and to calculate estimated benefits due.

f. Benefit rates and effective dates may be released to the Social Security Administration, Bureau of Supplemental Security Income, to Federal, State and local welfare or public aid agencies to assist them in processing applications for benefits under their respective programs.

g. In the event the Board has determined to designate a person to be the representative payee of an incompetent beneficiary, disclosure of information concerning the benefit amount and other similar information may be made to the representative payee from the record of the individual.

h. Records may be disclosed to the General Accountability Office for auditing purposes and for collection of debts arising from overpayments under the Railroad Unemployment Insurance Act, as amended.

i. The last addresses and employer information may be disclosed to the Department of Health and Human Services in conjunction with the Parent Locator Service.

j. If a request for information pertaining to an individual is made by an official of a labor organization of which the individual is a member and the request is made on behalf of the individual, information from the record of the individual concerning this benefit or anticipated benefit may be disclosed to the labor organization official.

k. Records may be disclosed in a court proceeding relating to any claims for benefits by the beneficiary under the Railroad Unemployment Insurance Act and may be disclosed during the course of an administrative appeal to individuals who need the records to prosecute or decide the appeal or to individuals who are requested to

provide information relative to an issue involved in the appeal.

l. Beneficiary identifying and claim period information may be furnished to states for the purpose of their notifying the RRB whether claimants were paid state unemployment or sickness benefits and also whether wages were reported for them. For claimants that a state identifies as having received state unemployment benefits, RRB benefit information may be furnished the state for the purpose of recovery of the amount of the duplicate payments which is made.

DISCLOSURE TO CONSUMER REPORTING AGENCIES:

None.

POLICIES AND PRACTICES FOR STORING, RETRIEVING, ACCESSING, RETAINING, AND DISPOSING OF RECORDS IN THE SYSTEM:

STORAGE:

Paper

RETRIEVABILITY:

Name, Social Security number.

SAFEGUARDS:

Maintained in areas not accessible to the public in steel filing cabinets and are available only to authorized district office and regional office personnel. Offices are locked during non-business hours. Building has 24 hour on-site security officers, closed circuit television monitoring and intrusion detection systems.

RETENTION AND DISPOSAL:

Maintained for five years after end of benefit year in which originated, then destroyed in accordance with NIST guidelines.

SYSTEM MANAGER(S) AND ADDRESS:

Office of Programs—Director of Policy and Systems, Railroad Retirement Board, 844 Rush Street, Chicago, Illinois 60611–2052.

NOTIFICATION PROCEDURE:

Requests for information regarding an individual's records should be in writing, including full name, Social Security number, and railroad retirement claim number (if any) of the individual. Before any information about any record will be released, the individual may be required to provide proof of identity or authorization from the individual to permit release of information. Such requests should be sent to: Office of Programs—Director of Operations, Railroad Retirement Board, 844 Rush Street, Chicago, Illinois 60611–2092.

RECORD ACCESS PROCEDURE:

See Notification section above.

CONTESTING RECORD PROCEDURE:

See Notification section above.

RECORD SOURCE CATEGORIES:

Individual claimant or his authorized representative, employers, State employment and unemployment claims records, Federal, and Social Security Administration employer compensation reports.

EXEMPTIONS CLAIMED FOR THE SYSTEM:

None.

* * * * *

RRB–7

SYSTEM NAME:

Applications for Unemployment Benefits and Placement Service under the Railroad Unemployment Insurance Act.

SYSTEM LOCATION:

U.S. Railroad Retirement Board, 844 Rush Street, Chicago, Illinois 60611.

District and Regional Offices: See Appendix I for addresses.

SECURITY CLASSIFICATION:

None.

CATEGORIES OF INDIVIDUALS COVERED BY THE SYSTEM:

Individuals who have applied for unemployment benefits and employment service.

CATEGORIES OF RECORDS IN THE SYSTEM:

Name, address, account number, age, sex, education, employer, occupation, rate of pay, reason not working and last date worked, personal interview record, results of investigations.

AUTHORITY FOR MAINTENANCE OF THE SYSTEM:

Section 12(l) of the Railroad Unemployment Insurance Act (45 U.S.C. 362(l)).

PURPOSE(S):

The purpose of this system of records is to be used as an individual's UI file. The records contained in the file are pertinent to the individual's claim for unemployment benefits under the RUIA.

ROUTINE USES OF RECORDS MAINTAINED IN THE SYSTEM, INCLUDING CATEGORIES OF USERS, AND THE PURPOSES OF SUCH USES:

a. Selected information may be disclosed to prospective employers for potential job placement.

b. In the event the Board has determined to designate a person to be the representative payee of an incompetent beneficiary, disclosure of information concerning the benefit amount and other similar information may be made to the representative payee from the record of the individual.

c. Beneficiary identification and entitlement information may be released to third party contacts to determine if incapacity of the beneficiary or potential beneficiary to understand or use benefits exists, and to determine the suitability of a proposed representative payee.

d. A record from this system of records may be disclosed to a Federal agency, in response to its request, in connection with the hiring or retention of an employee, the issuance of a security clearance, the reporting of an investigation of an employee, the letting of a contract, or the issuance of a license, grant, or other benefit by the requesting agency, to the extent that the information is relevant and necessary to the requesting agency's decision on the matter, provided that disclosure would be clearly in the furtherance of the interest of the subject individual.

e. Beneficiary identification, entitlement, and benefit rate information may be released to the Treasury Department to control for reclamation and return of outstanding benefit payments, to issue benefit payments, reconcile reports of non-delivery and to insure delivery of payments to the correct address or account of the beneficiary or representative payee.

f. Information may be referred to the U.S. Postal Service for investigation of alleged forgery or theft of railroad unemployment or sickness benefit checks.

g. Beneficiary identification, entitlement, and benefit rate information may be released to the Social Security Administration, Bureau of Supplemental Security Income, to Federal, State, and local welfare or public aid agencies to assist them in processing applications for benefits under their respective programs.

h. The last addresses and employer information may be disclosed to Department of Health and Human Services in conjunction with the Parent Locator Service.

i. Records may be disclosed to the General Accountability Office for auditing purposes and for collection of debts arising from overpayments under the Railroad Unemployment Insurance Act, as amended.

j. Identifying information such as full name, address, date of birth, Social Security number, employee identification number, and date last worked, may be released to any last employer to verify entitlement for benefits under the Railroad Unemployment Insurance Act.

k. Pursuant to a request from an employer covered by the Railroad

Retirement Act or the Railroad Unemployment Insurance Act, information regarding the Board's payment of unemployment or sickness benefits, the methods by which such benefits are calculated, entitlement data and present address will be released to the requesting employer for the purposes of determining entitlement to and rates of private supplemental pension, sickness or unemployment benefits and to calculate estimated benefits due.

l. If a request for information pertaining to an individual is made by an official of a labor organization of which the individual is a member and the request is made on behalf of the individual information from the record of the individual concerning his benefit or anticipated benefit and concerning the method of calculating that benefit may be disclosed to the labor organization official.

m. Records may be disclosed in a court proceeding relating to any claims for benefits by the beneficiary under the Railroad Unemployment Insurance Act and may be disclosed during the course of an administrative appeal to individuals who need the records to prosecute or decide the appeal or to individuals who are requested to provide information relative to an issue involved in the appeal.

DISCLOSURE TO CONSUMER REPORTING AGENCIES:

None.

POLICIES AND PRACTICES FOR STORING, RETRIEVING, ACCESSING, RETAINING, AND DISPOSING OF RECORDS IN THE SYSTEM:

STORAGE:

Paper, Magnetic Tape and Magnetic Disk

RETRIEVABILITY:

Social Security number.

SAFEGUARDS:

Paper: Maintained in areas not accessible to the public in metal filing cabinets. Access is limited to authorized RRB employees. Offices are locked during non-business hours. Building has 24 hour on-site security officers, closed circuit television monitoring and intrusion detection systems.

Magnetic tape and magnetic disk: Computer and computer storage rooms are restricted to authorized personnel; on-line query safeguards include a lock/unlock password system, a terminal oriented transaction matrix, role based access controls and audit trail. For electronic records, system securities are established in accordance with National Institute of Standards and Technology (NIST) guidelines, including network monitoring, defenses in-depth, incident response and forensics. In addition to the on-line query safeguards, they include encryption of all data transmitted and exclusive use of leased telephone lines.

RETENTION AND DISPOSAL:

In routine cases, held for three years after end of benefit year in which originated. In those with adverse activities (claims denied), held for five years after end of benefit year in which originated. At end of both periods, files are destroyed in accordance with NIST guidance.

Magnetic tape: Magnetic tape records are retained for 90 days and then written over following NIST guidelines. For disaster recovery purposes certain tapes are stored 12–18 months.

Magnetic disk: Retained for at least seven, but no later than ten years after the close of the benefit year. When magnetic disk or other electronic media is no longer required or serviceable, it is sanitized in accordance with NIST guidelines.

SYSTEM MANAGER(S) AND ADDRESS:

Office of Programs—Director of Policy and Systems, Railroad Retirement Board, 844 Rush Street, Chicago, Illinois 60611–2092.

NOTIFICATION PROCEDURE:

Requests for information regarding an individual's record should be in writing, including the full name, Social Security number and railroad retirement claim number (if any) of the individual. Before information about any record will be released, the individual may be required to provide proof of identity, or authorization from the individual to permit release of information. Such requests should be sent to: Office of Programs—Director of Operations, Railroad Retirement Board, 844 Rush Street, Chicago, Illinois 60611–2092.

RECORD ACCESS PROCEDURE:

See Notification section above.

CONTESTING RECORD PROCEDURE:

See Notification section above.

RECORD SOURCE CATEGORIES:

Individual applicant or his authorized representative, present and former employers, State and Federal departments of employment security, Social Security Administration and labor organizations.

EXEMPTIONS CLAIMED FOR THE SYSTEM:

None.

* * * * *

RRB–8

SYSTEM NAME:

Railroad Retirement Tax Reconciliation System (Employee Representatives).

SYSTEM LOCATION:

U.S. Railroad Retirement Board, 844 Rush Street, Chicago, Illinois 60611–2092.

SECURITY CLASSIFICATION:

None.

CATEGORIES OF INDIVIDUALS COVERED BY THE SYSTEM:

Railroad employee representatives covered under the Railroad Retirement Act.

CATEGORIES OF RECORDS IN THE SYSTEM:

Form CT–2 Employee Representative's Quarterly Railroad Tax Return.

AUTHORITY FOR MAINTENANCE OF THE SYSTEM:

Section 15 of the Railroad Retirement Act of 1974 (45 U.S.C. 231n).

PURPOSE(S):

The purpose of this system is to ensure that the earnings of employee representatives reported to the Internal Revenue Service for tax purposes agree with earnings reported to the RRB for benefit payment purposes.

ROUTINE USES OF RECORDS MAINTAINED IN THE SYSTEM, INCLUDING CATEGORIES OF USERS, AND THE PURPOSES OF SUCH USES:

a. Earnings information may be released to the Internal Revenue Service and the Treasury Department to refund excess taxes.

b. Records may be disclosed to the Government Accountability Office for auditing purposes.

c. Earnings information may be released to employers or former employers for correcting or reconstructing earnings records for railroad retirement, supplemental or unemployment/sickness employment tax purposes only, not to be construed as an extension of the statutory time limitation to amend such records.

DISCLOSURE TO CONSUMER REPORTING AGENCIES:

None.

POLICIES AND PRACTICES FOR STORING, RETRIEVING, ACCESSING, RETAINING, AND DISPOSING OF RECORDS IN THE SYSTEM:

STORAGE:

Paper.

RETRIEVABILITY:

Name.

SAFEGUARDS:

Maintained in areas not accessible to the public in metal filing cabinets. Access is limited to authorized RRB employees. Offices are locked during non-business hours. Building has 24 hour on-site security officers, closed circuit television monitoring and intrusion detection systems.

RETENTION AND DISPOSAL:

Employee's representatives' quarterly tax returns and tax reporting reconciliation file are retained for 6 years and 3 months after the period covered by the records and then are destroyed by shredding in accordance with NIST guidelines.

SYSTEM MANAGER(S) AND ADDRESS:

Chief Financial Officer, U.S. Railroad Retirement Board, 844 Rush Street, Chicago, Illinois 60611–2092.

NOTIFICATION PROCEDURE:

Requests for information regarding an individual's record should be in writing addressed to the System Manager identified above, including the full name and Social Security number. Before information about any record is released, the System Manager may require the individual to provide proof of identity or require the requester to furnish an authorization from the individual to permit release of information.

RECORD ACCESS PROCEDURE:

See Notification section above.

CONTESTING RECORD PROCEDURE:

See Notification section above.

RECORD SOURCE CATEGORIES:

Railroad tax reports, creditable and taxable compensation.

EXEMPTIONS CLAIMED FOR THE SYSTEM:

None.

* * * * *

RRB–9 [Reserved]

* * * * *

RRB–10

SYSTEM NAME:

Legal Opinion and Correspondence Files.

SYSTEM LOCATION:

U.S. Railroad Retirement Board, 844 Rush Street, Chicago, Illinois 60611.

SECURITY CLASSIFICATION:

None.

CATEGORIES OF INDIVIDUALS COVERED BY THE SYSTEM:

Applicants for benefits under the Railroad Retirement Act or the Railroad Unemployment Insurance Act.

CATEGORIES OF RECORDS IN THE SYSTEM:

The files include a copy of the question submitted to the legal department for an opinion and a copy of the response released. Responses may be a formal legal opinion, a letter, or a memorandum. There may be copies of any correspondence between the agency and the individual or his/her employer concerning the question presented.

AUTHORITY FOR MAINTENANCE OF THE SYSTEM:

Section 7(b)(6) of the Railroad Retirement Act of 1974 (45 U.S.C. 231f(b)(6)) and section 12(l) of the Railroad Unemployment Insurance Act (45 U.S.C. 362(l)).

PURPOSE(S):

The RRB needs to collect and maintain information contained in this system of records in order to make decisions regarding the claims for benefits of individuals under various Acts administered by the RRB.

ROUTINE USES OF RECORDS MAINTAINED IN THE SYSTEM, INCLUDING CATEGORIES OF USERS, AND THE PURPOSES OF SUCH USES:

DISCLOSURE TO CONSUMER REPORTING AGENCIES:

None.

POLICIES AND PRACTICES FOR STORING, RETRIEVING, ACCESSING, RETAINING, AND DISPOSING OF RECORDS IN THE SYSTEM:

STORAGE:

Paper.

RETRIEVABILITY:

Name.

SAFEGUARDS:

Maintained in areas not accessible to the public in metal filing cabinets. Offices are locked during non-business hours. Access to files is restricted to RRB attorneys and other authorized Board employees. Building has 24 hour on-site security officers, closed circuit television monitoring and intrusion detection systems.

RETENTION AND DISPOSAL:

Opinions of precedential interest or otherwise of lasting significance, and correspondence related to these opinions are retained permanently. Opinions of limited significance beyond the particular case, and correspondence related to these opinions, are retained in the individual's claim folder, if any, established under the Railroad Retirement Act. When no folder exists, these opinions, are destroyed by shredding 2 years after the date of the last action taken by the Bureau of Law on the matter. Destruction is performed in accordance with NIST guidelines.

SYSTEM MANAGER(S) AND ADDRESS:

General Counsel, U.S. Railroad Retirement Board, 844 Rush Street, Chicago, Illinois 60611.

NOTIFICATION PROCEDURE:

Requests for information regarding an individual's record should be in writing addressed to the System Manager identified above, including the full name, Social Security number and claim number of the individual. Before information about any record will be released, the System Manager may require the individual to provide proof of identity or require the requester to furnish an authorization from the individual to permit release of information.

RECORD ACCESS PROCEDURE:

See Notification section above.

CONTESTING RECORD PROCEDURE:

See Notification section above.

RECORD SOURCE CATEGORIES:

The subject person's authorized representative, other record systems maintained by the Railroad Retirement Board, employers.

EXEMPTIONS CLAIMED FOR THE SYSTEM:

None.

* * * * *

RRB–11

SYSTEM NAME:

Files on Concluded Litigation.

SYSTEM LOCATION:

U.S. Railroad Retirement Board, 844 Rush Street, Chicago, Illinois 60611.

SECURITY CLASSIFICATION:

None.

CATEGORIES OF INDIVIDUALS COVERED BY THE SYSTEM:

Railroad employees, retired railroad employees, and individuals with some creditable railroad service who are involved in litigation in which the Railroad Retirement Board has some interest as a party or otherwise.

CATEGORIES OF RECORDS IN THE SYSTEM:

Legal briefs, reports on legal or factual issues involving copies of subpoenas which may have been issued, copies of any motions filed, transcripts of any depositions taken, garnishment process, correspondence received and copies of any correspondence released by the

Board pertaining to the case, copies of any court rulings, and copies of the final decision in the case.

AUTHORITY FOR MAINTENANCE OF THE SYSTEM:

Section 7(b)(6) of the Railroad Retirement Act of 1974 (45 U.S.C. 231f(b)(6)) and section 12(l) of the Railroad Unemployment Insurance Act (45 U.S.C. 362(l)).

PURPOSE(S):

The RRB needs to collect and maintain records of concluded litigation to which the RRB was a party.

ROUTINE USES OF RECORDS MAINTAINED IN THE SYSTEM, INCLUDING CATEGORIES OF USERS, AND THE PURPOSES OF SUCH USES:

DISCLOSURE TO CONSUMER REPORTING AGENCIES:

None.

POLICIES AND PRACTICES FOR STORING, RETRIEVING, ACCESSING, RETAINING, AND DISPOSING OF RECORDS IN THE SYSTEM:

STORAGE:

Paper.

RETRIEVABILITY:

Name.

SAFEGUARDS:

Maintained in areas not accessible to the public in metal filing cabinets. Offices are locked during non-business hours. Access to files is restricted to RRB attorneys and other authorized Board employees. Building has 24 hour on-site security officers, closed circuit television monitoring and intrusion detection systems.

RETENTION AND DISPOSAL:

Files relating to cases of precedential interest are retained permanently. Files of cases involving routine matters, other than garnishments, are retained for 5 years after the case is closed, then shredded. Files relating to garnishment of benefits are retained until 2 years after the date garnishment terminates, then destroyed. Destruction is performed in accordance with NIST guidelines.

SYSTEM MANAGER(S) AND ADDRESS:

General Counsel, U.S. Railroad Retirement Board, 844 Rush Street, Chicago, Illinois 60611.

NOTIFICATION PROCEDURE:

Requests for information regarding an individual's record should be in writing addressed to the System Manager identified above, including the full name and Social Security number and claim number of the individual. Before information about any record will be released, the System Manager may require the individual to provide proof of identity or require the requester to furnish an authorization from the individual to permit release of information.

RECORD ACCESS PROCEDURE:

See Notification section above.

CONTESTING RECORD PROCEDURE:

See Notification section above.

RECORD SOURCE CATEGORIES:

The individual himself or his authorized representative, other record systems maintained by the Railroad Retirement Board, employers, the Social Security Administration.

EXEMPTIONS CLAIMED FOR THE SYSTEM:

None.

* * * * *

RRB–12

SYSTEM NAME:

Railroad Employees' Registration File.

SYSTEM LOCATION:

U.S. Railroad Retirement Board, 844 Rush Street, Chicago, Illinois 60611.

SECURITY CLASSIFICATION:

None.

CATEGORIES OF INDIVIDUALS COVERED BY THE SYSTEM:

Individuals who had any employment for a railroad employer after 1936 who were assigned Social Security Numbers beginning with 700 through 728. (Use of the registration form was discontinued January 1, 1981.)

CATEGORIES OF RECORDS IN THE SYSTEM:

Railroad employee's name, address, Social Security number, date of birth, place of birth, mother's and father's names, sex, occupation and employer.

AUTHORITY FOR MAINTENANCE OF THE SYSTEM:

Section 7(b)(6) of the Railroad Retirement Act of 1974 (45 U.S.C. 231f(b)(6)).

PURPOSE(S):

The purpose of the system is to provide information on railroad employees who completed Carrier Employee Registration forms (CER–1) to apply for a Social Security number (SSN). The information on these CER–1 forms was available only at the Railroad Retirement Board.

ROUTINE USES OF RECORDS MAINTAINED IN THE SYSTEM, INCLUDING CATEGORIES OF USERS, AND THE PURPOSES OF SUCH USES:

a. Records which consist of name, date and place of birth, Social Security number, and parents' names may be disclosed to the Social Security Administration to verify Social Security number and date of birth.

b. Records may be disclosed in a court proceeding relating to any claims for benefits by the beneficiary under the Railroad Retirement Act, or Unemployment Insurance Act and may be disclosed during the course of an administrative appeal to individuals who need the records to prosecute or decide the appeal or to individuals who are requested to provide information relative to an issue involved in the appeal.

DISCLOSURE TO CONSUMER REPORTING AGENCIES:

None.

POLICIES AND PRACTICES FOR STORING, RETRIEVING, ACCESSING, RETAINING, AND DISPOSING OF RECORDS IN THE SYSTEM:

STORAGE:

Microfiche.

RETRIEVABILITY:

Social Security number.

SAFEGUARDS:

Maintained in areas not accessible to the public in metal filing cabinets. Access is limited to authorized RRB employees. Offices are locked during non-business hours. Building has 24 hour on-site security officers, closed circuit television monitoring and intrusion detection systems.

RETENTION AND DISPOSAL:

Permanent retention.

SYSTEM MANAGER(S) AND ADDRESS:

Office of Programs—Director of Policy and Systems, Railroad Retirement Board, 844 Rush Street, Chicago, Illinois 60611–2092.

NOTIFICATION PROCEDURE:

Requests for information regarding an individual's record should be in writing addressed to the System Manager identified above, including the full name and Social Security number and claim number of the individual. Before information about any record will be released, the System Manager may require the individual to provide proof of identity or require the requester to furnish an authorization from the individual to permit release of information.

RECORD ACCESS PROCEDURE:

See Notification section above.

CONTESTING RECORD PROCEDURE:

See Notification section above.

RECORD SOURCE CATEGORIES:

Railroad employee and employer.

EXEMPTIONS CLAIMED FOR THE SYSTEM:

None.

* * * * *

RRB–13–15 [Reserved]

* * * * *

RRB–16

SYSTEM NAME:

Social Security Administration Master Earnings File.

SYSTEM LOCATION:

U.S. Railroad Retirement Board, 844 Rush Street, Chicago, Illinois 60611.

SECURITY CLASSIFICATION:

None.

CATEGORIES OF INDIVIDUALS COVERED BY THE SYSTEM:

Employees who have at least 48 creditable service months under the Railroad Retirement Act (RRA) or who attain eligibility for RRA benefits when military service is included as creditable railroad service.

CATEGORIES OF RECORDS IN THE SYSTEM:

Social Security account number, name, date of birth, gender, Social Security claim status, details of earnings and periods of employment that are creditable under the Social Security Act for years after 1936.

AUTHORITY FOR MAINTENANCE OF THE SYSTEM:

Section 7(b)(6) of the Railroad Retirement Act of 1974 (45 U.S.C. 231(b)(6))

PURPOSE(S):

The purpose of this system of records is to have Social Security Act earnings information available to RRB benefit programs for determinations related to RRA benefit entitlement and amount. The records are stored in the Employment Data Maintenance database.

ROUTINE USES OF RECORDS MAINTAINED IN THE SYSTEM, INCLUDING CATEGORIES OF USERS, AND THE PURPOSES OF SUCH USES:

Internal RRB Use.

DISCLOSURE TO CONSUMER REPORTING AGENCIES:

None.

POLICIES AND PRACTICES FOR STORING, RETRIEVING, ACCESSING, RETAINING, AND DISPOSING OF RECORDS IN THE SYSTEM:

STORAGE:

Mainframe computer database.

RETRIEVABILITY:

Social Security account number and name.

SAFEGUARDS:

Computer and computer storage rooms are restricted to authorized personnel; on-line query safeguards include a lock/unlock password system, a terminal oriented transaction matrix, role based access controls and audit trail. For electronic records, system securities are established in accordance with National Institute of Standards and Technology (NIST) guidelines, including network monitoring, defenses in-depth, incident response and forensics. In addition to the on-line query safeguards, they include encryption of all data transmitted and exclusive use of leased telephone lines.

RETENTION AND DISPOSAL:

Updates are made to database weekly using files transmitted to RRB from SSA over encrypted, exclusively leased telephone lines.

Magnetic tape: Magnetic tape records are retained for 90 days and then written over following NIST guidelines. For disaster recovery purposes certain tapes are stored 12–18 months.

Magnetic disk: Continually updated and permanently retained. When magnetic disk or other electronic media is no longer required or servicable, it is sanitized in accordance with NIST guidelines.

SYSTEM MANAGER(S) AND ADDRESS:

Office of Programs—Director of Policy and Systems, Railroad Retirement Board, 844 Rush Street, Chicago, Illinois 60611–2092.

NOTIFICATION PROCEDURE:

Requests for information regarding an individual's record should be in writing, including the full name, Social Security number and railroad retirement claim number(if any) of the individual. Before information about any record will be released, the individual may be required to provide proof of identity, or authorization from the individual to permit release of information. Such requests should be sent to: Office of Programs—Assessment and Training, Chief of Employer Service and Training Center, Railroad Retirement Board, 844 Rush Street, Chicago, Illinois 60611–2092.

RECORD ACCESS PROCEDURE:

See Notification section above.

CONTESTING RECORD PROCEDURE:

See Notification section above.

RECORD SOURCE CATEGORIES:

Social Security Administration.

EXEMPTIONS CLAIMED FOR THE SYSTEM:

None.

* * * * *

RRB–17

SYSTEM NAME:

Appeal Decisions from Initial Denials for Benefits Under the Provisions of the Railroad Retirement Act or the Railroad Unemployment Insurance Act.

SYSTEM LOCATION:

U.S. Railroad Retirement Board, 844 Rush Street, Chicago, Illinois 60611.

SECURITY CLASSIFICATION:

None.

CATEGORIES OF INDIVIDUALS COVERED BY THE SYSTEM:

Appellants under the provisions of the Railroad Retirement Act and the Railroad Unemployment Insurance Act.

CATEGORIES OF RECORDS IN THE SYSTEM:

Narrative of the facts and law pertinent to the decision made by the Hearings Officer.

AUTHORITY FOR MAINTENANCE OF THE SYSTEM:

Section 7(b)(6) of the Railroad Retirement Act of 1974 (45 U.S.C. 231f(b)(6); sec. 12(l) of the Railroad Unemployment Insurance Act (45 U.S.C. 362(l)).

PURPOSE(S):

Maintain copies of appeals decisions issued by the Bureau of Hearings and Appeals.

ROUTINE USES OF RECORDS MAINTAINED IN THE SYSTEM, INCLUDING CATEGORIES OF USERS, AND THE PURPOSES OF SUCH USES:

a. If a request for information pertaining to an individual is made by an official of a labor organization of which the individual is a member and the request is made on behalf of the individual, information from the record of the individual concerning his benefit or anticipated benefit and concerning the method of calculating that benefit may be disclosed to the labor organization official.

b. Records may be disclosed in a court proceeding relating to any claims for benefits by the beneficiary under the Railroad Retirement Act and may be disclosed during the course of an administrative appeal to individuals who need the records to prosecute or decide the appeal or to individuals who are requested to provide information relative to an issue involved in the appeal.

DISCLOSURE TO CONSUMER REPORTING AGENCIES:

None.

POLICIES AND PRACTICES FOR STORING, RETRIEVING, ACCESSING, RETAINING, AND DISPOSING OF RECORDS IN THE SYSTEM:

STORAGE:

Paper.

RETRIEVABILITY:

Claim number or Social Security number, Bureau of Hearings and Appeals appeal number, or Bureau of Hearings and Appeal decision number.

SAFEGUARDS:

Maintained in areas not accessible to the public in metal filing cabinets. Access is limited to authorized RRB employees. Offices are locked during non-business hours. Building has 24 hour on-site security officers, closed circuit television monitoring and intrusion detection systems.

RETENTION AND DISPOSAL:

The decisions are retained for a period of 2 years and then destroyed by shredding in accordance with NIST guidelines.

SYSTEM MANAGER(S) AND ADDRESS:

Assistant General Counsel/Director of Hearings and Appeals, U.S. Railroad Retirement Board, 844 Rush Street, Chicago, Illinois 60611

NOTIFICATION PROCEDURE:

Requests for information regarding an individual's record should be in writing addressed to the System Manager identified above, including the full name and Social Security number and claim number of the individual. Before information about any record will be released, the System Manager may require the individual to provide proof of identity or require the requester to furnish an authorization from the individual to permit release of information.

RECORD ACCESS PROCEDURE:

See Notification section above.

CONTESTING RECORD PROCEDURE:

See Notification section above.

RECORD SOURCE CATEGORIES:

Information furnished by the appellant or his/her authorized representative, information developed by the hearings officer relevant to the appeal, and information contained in other record systems maintained by the Railroad Retirement Board.

EXEMPTIONS CLAIMED FOR THE SYSTEM:

None.

* * * * *

RRB–18

SYSTEM NAME:

Miscellaneous Payments paid/posted to the General Ledger by FFS

SYSTEM LOCATION:

U.S. Railroad Retirement Board, 844 Rush Street, Chicago, Illinois 60611.

SECURITY CLASSIFICATION:

None.

CATEGORIES OF INDIVIDUALS COVERED BY THE SYSTEM:

Railroad Retirement Board employees.

CATEGORIES OF RECORDS IN THE SYSTEM:

Travel vouchers, miscellaneous reimbursement vouchers.

AUTHORITY FOR MAINTENANCE OF THE SYSTEM:

Section 7(b)(6) of the Railroad Retirement Act of 1974 (45 U.S.C. 231f(b)(6)) and Section 12(l) of the Railroad Unemployment Insurance Act (45 U.S.C. 362(l)).

PURPOSE(S):

The system is used to pay the operating expenses of the agency and reimbursements as needed to employees. Payment is made to vendors for goods and services. Employees are reimbursed for expenses related to the performance of their jobs. Payments are made within Federal limits and applicable guidelines.

ROUTINE USES OF RECORDS MAINTAINED IN THE SYSTEM, INCLUDING CATEGORIES OF USERS, AND THE PURPOSES OF SUCH USES:

a. Identifying information and check amount may be released to the Treasury Department to issue checks.

b. Records may be disclosed to the General Accountability Office for auditing purposes.

c. Identifying information, check number, date and amount may be released to the U.S. Postal Service for investigation of alleged forgery or theft of reimbursement checks.

DISCLOSURE TO CONSUMER REPORTING AGENCIES:

None.

POLICIES AND PRACTICES FOR STORING, RETRIEVING, ACCESSING, RETAINING, AND DISPOSING OF RECORDS IN THE SYSTEM:

STORAGE:

Paper, Magnetic tape and Magnetic disk.

RETRIEVABILITY:

Name.

SAFEGUARDS:

Paper: Maintained in areas not accessible to the public in metal filing cabinets. Access is limited to authorized RRB employees. Offices are locked during non-business hours. Building has 24 hour on-site security officers, closed circuit television monitoring and intrusion detection systems.

Magnetic tape and magnetic disk: Computer and computer storage rooms are restricted to authorized personnel; on-line query safeguards include a lock/unlock password system, a terminal oriented transaction matrix, role based access controls and audit trail. For electronic records, system securities are established in accordance with National Institute of Standards and Technology (NIST) guidelines, including network monitoring, defenses in-depth, incident response and forensics. In addition to the on-line query safeguards, they include encryption of all data transmitted and exclusive use of leased telephone lines.

RETENTION AND DISPOSAL:

Paper. Retain at headquarters for two years then transferred to National Archives and Records Administration (NARA), Great Lakes Federal Records Center. The General Services Administration will destroy the records when authorized by the Government Accountability Office.

Magnetic tape: Magnetic tape records are retained for 90 days and then written over following NIST guidelines. For disaster recovery purposes certain tapes are stored 12–18 months.

Magnetic disk: Continually updated and permanently retained. When magnetic disk or other electronic media is no longer required or servicable, it is sanitized in accordance with NIST guidelines.

SYSTEM MANAGER(S) AND ADDRESS:

Chief Financial Officer, U.S. Railroad Retirement Board, 844 Rush Street, Chicago, Illinois 60611–2092.

NOTIFICATION PROCEDURE:

Requests for information regarding an individual's record should be in writing addressed to the System Manager identified above, including the full name and Social Security number and claim number of the individual. Before information about any record will be released, the System Manager may require the individual to provide proof of identity or require the requester to furnish an authorization from the individual to permit release of information.

RECORD ACCESS PROCEDURE:

See Notification section above.

CONTESTING RECORD PROCEDURE:

See Notification section above.

RECORD SOURCE CATEGORIES:

Employees travel records, memoranda from bureau directors and office heads. Form G–409 Request for Reimbursement of Commuting Expenses and Form G–753 Application for Reimbursement of Medical and/or Eye Examination Fees.

EXEMPTIONS CLAIMED FOR THE SYSTEM:

None.

* * * * *

RRB–19

SYSTEM NAME:

Transit Benefit Program Records System.

SYSTEM LOCATION:

U.S. Railroad Retirement Board, 844 Rush Street, Chicago, Illinois 60611.

SECURITY CLASSIFICATION:

None.

CATEGORIES OF INDIVIDUALS COVERED BY THE SYSTEM:

Railroad Retirement Board employees.

CATEGORIES OF RECORDS IN THE SYSTEM:

Supporting documentation relating to participation in the agency's transit benefit program.

AUTHORITY FOR MAINTENANCE OF THE SYSTEM:

5 U.S.C. 301, 1302; 26 U.S.C. 132(f); and Executive Order 9397.

PURPOSE(S):

The purpose of this system is to maintain employee data related to eligibility and participation in the agency's transit benefit program.

ROUTINE USES OF RECORDS MAINTAINED IN THE SYSTEM, INCLUDING CATEGORIES OF USERS, AND THE PURPOSES OF SUCH USES:

Transit benefit program documentation may be furnished to the Internal Revenue Service for tax administration purposes.

DISCLOSURE TO CONSUMER REPORTING AGENCIES:

None.

POLICIES AND PRACTICES FOR STORING, RETRIEVING, ACCESSING, RETAINING, AND DISPOSING OF RECORDS IN THE SYSTEM:

STORAGE:

Paper.

RETRIEVABILITY:

Name.

SAFEGUARDS:

Maintained in areas not accessible to the public in metal filing cabinets. Access is limited to authorized RRB employees. Information released only at employee's request or to approved federal authorities. Offices are locked during non-business hours. Building has 24 hour on-site security officers, closed circuit television monitoring and intrusion detection systems.

RETENTION AND DISPOSAL:

Retained for three years and then destroyed by shredding in accordance with NIST guidelines.

SYSTEM MANAGER(S) AND ADDRESS:

Chief Financial Officer, U.S. Railroad Retirement Board, 844 Rush Street, Chicago, Illinois 60611–2092.

NOTIFICATION PROCEDURE:

Requests for information regarding an individual's record should be in writing addressed to the System Manager identified above, including the full name and Social Security number of the individual. Before information about any record will be released, the System Manager may require the individual to provide proof of identity or require the requester to furnish an authorization from the individual to permit release of information.

RECORD ACCESS PROCEDURE:

See Notification section above.

CONTESTING RECORD PROCEDURE:

See Notification section above.

RECORD SOURCE CATEGORIES:

Form G–409 Railroad Retirement Board Request for Reimbursement of Commuting Expenses and Form G–410, Railroad Retirement Board Transportation Benefit Program Application.

EXEMPTIONS CLAIMED FOR THE SYSTEM:

None.

* * * * *

RRB–20

SYSTEM NAME:

Health Insurance and Supplementary Medical Insurance Enrollment and Premium Payment System (MEDICARE).

SYSTEM LOCATION:

U.S. Railroad Retirement Board, 844 Rush Street, Chicago, Illinois 60611. District and Regional Offices: See Appendix I for addresses.

SECURITY CLASSIFICATION:

None.

CATEGORIES OF INDIVIDUALS COVERED BY THE SYSTEM:

Qualified Railroad Retirement beneficiaries who are eligible for Medicare coverage, attending physicians, chiropractors and physical therapists.

CATEGORIES OF RECORDS IN THE SYSTEM:

Claim number, Social Security number, name, address, type of beneficiary under the Railroad Retirement Act, date of birth, method of Supplementary Medical Insurance premium payment, enrollment status, amount of premium, paid-thru date, third party premium payment information, coverage jurisdiction determination, direct premium billing and premium refund accounting, correspondence from beneficiaries, physicians suspected of over-utilization and those suspended from payment by Medicare.

AUTHORITY FOR MAINTENANCE OF THE SYSTEM:

Section 7(d) of the Railroad Retirement Act of 1974 (45 U.S.C. 231f(d)).

PURPOSE(S):

Records in this system are maintained to administer Title XVIII of the Social Security Act for qualified railroad retirement beneficiaries.

ROUTINE USES OF RECORDS MAINTAINED IN THE SYSTEM, INCLUDING CATEGORIES OF USERS, AND THE PURPOSES OF SUCH USES:

a. Beneficiary identification, enrollment status and premium deductions information may be released to the Social Security Administration and the Centers for Medicare & Medicaid Services to correlate actions with the administration of Title II and Title XVIII (MEDICARE) of the Social Security Act.

b. Beneficiary identification may be disclosed to third party contacts to determine if incapacity of the beneficiary or potential beneficiary to understand or use benefits exists, and to determine the suitability of a proposed representative payee.

c. In the event the Board has determined to designate a person to be the representative payee of an incompetent beneficiary, disclosure of information concerning the benefit amount and other similar information may be made from the record of the individual to the representative payee.

d. Data may be disclosed to Department of Health and Human Services for reimbursement for work done under reimbursement provisions of Title XVIII of the Social Security Act, as amended.

e. Jurisdictional clearance, premium rates, coverage election, paid-through date, and amounts of payments in arrears may be released to the Social Security Administration and the Centers for Medicare & Medicaid Services to assist those agencies in administering Title XVIII of the Social Security Act, as amended.

f. Beneficiary identifying information, date of birth, sex, premium rate paid thru date, and Medicare Part A and Part B entitlement date/end date may be disclosed to effect state buy-in and third party premium payments.

g. Payment data may be disclosed to consultants to determine reasonable charges for hospital insurance payments in Canada.

h. Entitlement data may be disclosed to primary beneficiaries regarding secondary beneficiaries (or vice versa) when the addition of such beneficiary affects entitlement.

i. Beneficiary last address information may be disclosed to Department of Health and Human Services in conjunction with the Parent Locator Service.

j. Beneficiary identification, entitlement data and rate information may be released to the Department of State and embassy officials, to the American Institute on Taiwan, and to the Veterans Administration Regional Office, Philippines, to aid in the development of applications, supporting evidence and the continued eligibility of beneficiaries and potential beneficiaries living abroad.

k. Records may be released to the General Accountability Office for auditing purposes and for collection of debts arising from overpayments under Title XVIII of the Social Security Act, as amended.

l. Pursuant to a request from an employer covered by the Railroad Retirement Act or the Railroad Unemployment Insurance Act, or from an insurance company acting as an agent of an employer, information regarding the RRB's determination of Medicare entitlement, entitlement data, and present address may be released to the requesting employer or insurance company acting as its agent for the purposes of either determining entitlement to and rates of supplemental benefits under private employer welfare benefit plans or complying with requirements of law covering the Medicare program.

m. If a request for information pertaining to an individual is made by an official of a labor organization of which the individual is a member and the request is made on behalf of the individual, information from the record of the individual concerning his or her entitlement to Medicare may be disclosed to the labor organization official.

n. Records may be disclosed in a court proceeding relating to any claims for benefits by the beneficiary under the Railroad Retirement Act, or Social Security Act and may be disclosed during the course of an administrative appeal to individuals who need the records to prosecute or decide the appeal or to individuals who are requested to provide information relative to an issue involved in the appeal.

o. Information may be disclosed to the Department of the Treasury for the purpose of investigating alleged forgery or theft of Medicare reimbursement checks.

p. Information may be disclosed to the U.S. Postal Service for investigating alleged forgery or theft of Medicare checks.

q. Identifying information about Medicare-entitled beneficiaries who may be working may be disclosed to the Centers for Medicare & Medicaid Services for the purposes of determining whether Medicare should be the secondary payer of benefits for such individuals.

r. Whether a qualified railroad retirement beneficiary is enrolled in Medicare Part A or Part B, and if so, the effective date(s) of such enrollment may be disclosed to a legitimate health care provider, in response to its request, when such information is needed to verify Medicare enrollment.

DISCLOSURE TO CONSUMER REPORTING AGENCIES:

None.

POLICIES AND PRACTICES FOR STORING, RETRIEVING, ACCESSING, RETAINING, AND DISPOSING OF RECORDS IN THE SYSTEM:

STORAGE:

Paper, Microfilm, Optical, Magnetic tape and Magnetic disk.

RETRIEVABILITY:

Claim number, Social Security number, full name.

SAFEGUARDS:

Paper, Microforms and Optical: Maintained in areas not accessible to the public in metal filing cabinents. Access is limited to authorized RRB employees. Offices are locked during non-business hours. Building has 24 hour on-site security officers, closed circuit television monitoring and intrusion detection systems.

Magnetic tape and disks: Computer and computer storage rooms are restricted to authorized personnel; on-line query safeguards include a lock/unlock password system, a terminal oriented transaction matrix, role based access controls and audit trail. For electronic records, system securities are established in accordance with National Institute of Standards and Technology (NIST) guidelines, including network monitoring, defenses in-depth, incident response and forensics. In addition to the on-line query safeguards, they include encryption of all data transmitted and exclusive use of leased telephone lines.

RETENTION AND DISPOSAL:

Paper: Computer printouts, including daily and monthly statistics, premium payment listings, state-buy-in listings and voucher listings are kept for 2 years, transferred to the Federal Records Center, and destroyed when 5 years old. Other copies of computer printouts are maintained for 1 year, then shredded. Applications material in individual claim folders with records of all actions pertaining to the payment or denial or claims are transferred to the Federal Record Center, Chicago, Illinois 5 years after the date of last payment or denial activity if all benefits have been paid, no future eligibility is apparent and no erroneous payments are outstanding. The claim folder is destroyed 25 years after the date it is received in the center. Destruction is in accordance with NIST guidelines.

Microfilm and Optical Media: Originals are kept for 3 years, transferred to the Federal Records Center and destroyed 3 years and 3 months after receipt at the center. One copy is kept 3 years then destroyed when 6 months old or no longer needed for administrative use, whichever is sooner. Destruction is in accordance with NIST guidelines.

Magnetic tape: Records are retained for 90 days and then written over following NIST guidelines. For disaster recovery purposes certain tapes are stored 12–18 months.

Magnetic disk: Continually updated and retained for at least 7 but not more than 10 years after the close of the benefit year. When magnetic disk or other electronic media is no longer required or servicable, it is sanitized in accordance with NIST guidelines.

SYSTEM MANAGER(S) AND ADDRESS:

Office of Programs—Director of Policy and Systems, Railroad Retirement Board, 844 Rush Street, Chicago, Illinois 60611–2092.

NOTIFICATION PROCEDURE:

Requests for information regarding an individual's records should be in writing, including the full name, Social Security number and railroad retirement claim number (if any) of the individual. Before information about any record will be released, the individual may be required to provide proof of identity, or authorization from the individual to permit release of information. Such

requests should be sent to: Office of Programs—Director of Operations, Railroad Retirement Board, 844 Rush Street, Chicago, Illinois 60611–2092.

RECORD ACCESS PROCEDURE:

See Notification section above.

CONTESTING RECORD PROCEDURE:

See Notification section above.

RECORD SOURCE CATEGORIES:

Applicant (the qualified railroad beneficiary), his/her representative, Social Security Administration, Centers for Medicare & Medicaid Services, Palmetto Government Benefits Administrators, Federal, State or local agencies, their party premium payers, all other Railroad Retirement Board files, physicians.

EXEMPTIONS CLAIMED FOR THE SYSTEM:

None.

* * * * *

RRB–21

SYSTEM NAME:

Railroad Unemployment and Sickness Insurance Benefit System.

SYSTEM LOCATION:

U.S. Railroad Retirement Board, 844 Rush Street, Chicago, Illinois 60611.

Regional and District Offices: See Appendix I for addresses.

SECURITY CLASSIFICATION:

None.

CATEGORIES OF INDIVIDUALS COVERED BY THE SYSTEM:

Applicants and claimants for unemployment and sickness (including maternity) benefits under the Railroad Unemployment Insurance Act: Some railroad employees injured at work who did not apply for Railroad Unemployment Insurance Act benefits; all railroad employees paid separation allowances.

CATEGORIES OF RECORDS IN THE SYSTEM:

Information pertaining to payment or denial of an individual's claim for benefits under the Railroad Unemployment Insurance Act: Name, address, sex, Social Security number, date of birth, total months of railroad service (including creditable military service), total creditable compensation for base year, last employer and date last worked before applying for benefits, last rate of pay in base year, reason not working, applications and claims filed, benefit information for each claim filed, disqualification periods and reasons for disqualification, entitlement to benefits under other laws, benefit recovery information about personal injury claims and pay for time not worked, medical reports, placement data, correspondence and telephone inquiries to and about the claimant, record of protest or appeal by claimant of adverse determinations made on his claims.

AUTHORITY FOR MAINTENANCE OF THE SYSTEM:

Section 12(l) of the Railroad Unemployment Insurance Act (45 U.S.C. 351, *et seq.*).

PURPOSE(S):

The purpose of this system of records is to carry out the function of collecting and storing information in order to administer the benefit program under the Railroad Unemployment Insurance Act.

ROUTINE USES OF RECORDS MAINTAINED IN THE SYSTEM, INCLUDING CATEGORIES OF USERS, AND THE PURPOSES OF SUCH USES:

a. Beneficiary identifying information may be disclosed to third party contacts to determine if incapacity of the beneficiary or potential beneficiary to understand or use benefits exists, and to determine the suitability of a proposed representative payee.

b. In the event the Board has determined to designate a person to be the representative payee of an incompetent beneficiary, disclosure of information concerning the benefit amount and other similar information may be made to the representative payee from the record of the individual.

c. Beneficiary identifying information, address, check rate, date and number may be released to the Treasury Department to control for reclamation and return outstanding benefit payments, to issue benefit payments, respond to reports of non-delivery and to insure delivery of check to the correct address or account of the beneficiary or representative payee.

d. Beneficiary identifying information, address, payment rate, date and number, plus other necessary supporting evidence may be released to the U.S. Postal Service for investigation of alleged forgery or theft of railroad unemployment/sickness benefit payments.

e. A record from this system of records may be disclosed to a Federal agency, in response to its request, in connection with the hiring or retention of an employee, the issuance of a security clearance, the reporting of an investigation of an employee, the letting of a contract, the issuance of a license, grant, or other benefit by the requesting agency, to the extent that the information is relevant and necessary to the requesting agency's decision in the matter, provided that disclosure would be clearly in the furtherance of the interest of the subject individual.

f. Under Section 2(f), the Railroad Retirement Board has the right to recover benefits paid to an employee who later receives remuneration for the same period, therefore, the Railroad Retirement Board may notify the person or company paying the remuneration of the Board's right to recovery and the amount of benefits to be refunded.

g. Under Section 12(o), the Railroad Retirement Board is entitled to reimbursement of sickness benefits paid on account of the infirmity for which damages are paid, consequently, the Railroad Retirement Board may send a notice of lien to the liable party, and, upon request by the liable party, advise the amount of benefits subject to reimbursement.

h. Beneficiary identifying information, rate and entitlement data may be released to the Social Security Administration to correlate actions with the administration of the Social Security Act.

i. The last addresses and employer information may be released to Department of Health and Human Services in conjunction with the Parent Locator Service.

j. Benefit rate, entitlement and periods paid may be disclosed to the Social Security Administration, Bureau of Supplemental Security Income to federal, state and local welfare or public aid agencies to assist them in processing applications for benefits under their respective programs.

k. Beneficiary identifying information, entitlement, rate and other pertinent data may be released to the Department of Labor in conjunction with payment of benefits under the Federal Coal Mine and Safety Act.

l. Records may be referred to the General Accountability Office for auditing purposes and for collection of debts arising from overpayments under the Railroad Unemployment Insurance Act.

m. If a request for information pertaining to an individual is made by an official of a labor organization, of which the individual is a member, information from the record of the individual concerning his benefit or anticipated benefit and concerning the method of calculating that benefit may be disclosed to the labor organization official.

n. Pursuant to a request from an employer covered by the Railroad Retirement Act or the Railroad Unemployment Insurance Act, or from an organization under contract to an employer or employers, information regarding the Board's payment of

unemployment or sickness benefits, the methods by which such benefits are calculated, entitlement data and present address may be released to the requesting employer or the organization under contract to an employer or employers for the purposes of determining entitlement to and rates of private supplemental pension, sickness or unemployment benefits and to calculate estimated benefits due.

o. Records may be disclosed in a court proceeding relating to any claims for benefits by the beneficiary under the Railroad Unemployment Insurance Act and may be disclosed during the course of an administrative appeal to individuals who need the records to prosecute or decide the appeal or to individuals who are requested to provide information relative to an issue involved in the appeal.

p. Beneficiary identifying information, entitlement data, benefit rates and periods paid may be released to the Veterans Administration to verify continued entitlement to benefits.

q. Identifying information such as full name, Social Security number, employee identification number, date last worked, occupation, and location last worked may be released to any last employer to verify entitlement for benefits under the Railroad Unemployment Insurance Act.

r. The amount of unemployment benefits paid, if 10 dollars or more in a calendar year, and claimant identifying information, may be furnished to the Internal Revenue Service for tax administration purposes.

s. The name and address of a claimant may be released to a Member of Congress when the Member requests it in order that he or she may communicate with the claimant about legislation which affects the railroad unemployment insurance system.

t. Beneficiary identifying and claim period information may be furnished to states for the purposes of their notifying the RRB whether claimants were paid state unemployment or sickness benefits and also whether wages were reported for them. For claimants that a state identifies as having received state unemployment or sickness benefits, RRB benefit information may be furnished the state for the purpose of recovery of the amount of the duplicate payments which is made.

u. The amount of each sickness benefit that is subject to a tier 1 railroad retirement tax and the amount of the tier 1 tax withheld may be disclosed to the claimant's last railroad employer to enable that employer to compute its tax liability under the Railroad Retirement Tax Act.

v. The amount of sickness benefits paid and claimant identifying information, except for sickness benefits paid for an on-the-job injury, may be furnished to the Internal Revenue Service for tax administration purposes.

w. Entitlement data and benefit rates may be released to any court, state agency, or interested party, or to the representative of such court, state agency, or interested party in connection with contemplated or actual legal or administrative proceedings concerning domestic relations and support matters.

x. Identifying information and information about a claim for benefits filed may be disclosed to an employee's base-year railroad employer and the employee's most recent railroad employee's most recent railroad employer, if different, in order to afford that employer or those employers the opportunity to submit information concerning the claim. In addition, after the claim has been paid, if the base-year railroad employer appeals the decision awarding benefits, all information regarding the claim may be disclosed to such base-year railroad employer that is necessary and appropriate for it to fully exercise its rights of appeal.

y. Non-medical information relating to the determination of sickness benefits may be disclosed to an insurance company administering a medical insurance program for railroad workers for purposes of determining entitlement to benefits under that program.

z. Scrambled Social Security number and complete home address information of unemployment claimants may be furnished to the Bureau of Labor Statistics for use in its Local Area Unemployment Statistics (LAUS) program.

DISCLOSURE TO CONSUMER REPORTING AGENCIES:

None.

POLICIES AND PRACTICES FOR STORING, RETRIEVING, ACCESSING, RETAINING, AND DISPOSING OF RECORDS IN THE SYSTEM:

STORAGE:

Paper, microforms, magnetic tape, magnetic disk.

RETRIEVABILITY:

Social Security number (claim number) and name.

SAFEGUARDS:

Paper and Microforms: Maintained in areas not accessible to the public in metal filing cabinets. Access is limited to authorized RRB employees. Offices are locked during non-business hours. Building has 24 hour on-site security officers, closed circuit television monitoring and intrusion detection systems.

Magnetic tape and disks: Computer and computer storage rooms are restricted to authorized personnel; on-line query safeguards include a lock/unlock password system, a terminal oriented transaction matrix, role based access controls and audit trail. For electronic records, system securities are established in accordance with National Institute of Standards and Technology (NIST) guidelines, including network monitoring, defenses in-depth, incident response and forensics. In addition to the on-line query safeguards, they include encryption of all data transmitted and exclusive use of leased telephone lines.

RETENTION AND DISPOSAL:

Paper and microform: Destroyed by shredding in accordance with NIST standards, no sooner than 7 years and no later than 10 years after the close of the benefit year.

Magnetic tape: Records are retained for 90 days and then written over following NIST guidelines. For disaster recovery purposes certain tapes are stored 12–18 months.

Magnetic disk: Continually updated and retained for at least 7 but not more than 10 years after the close of the benefit year. When magnetic disk or other electronic media is no longer required or servicable, it is sanitized in accordance with NIST guidelines.

SYSTEM MANAGER(S) AND ADDRESS:

Office of Programs—Director of Policy and Systems, Railroad Retirement Board, 844 Rush Street, Chicago, Illinois 60611–2092.

NOTIFICATION PROCEDURE:

Requests for information regarding an individual's record should be in writing, including the full name, Social Security number and railroad retirement claim number (if any) of the individual. Before information about any record will be released, the individual may be required to provide proof of identity, or authorization from the individual to permit release of information. Such requests should be sent to: Office of Programs—Director of Operations, Railroad Retirement Board, 844 Rush Street, Chicago, Illinois 60611.

RECORD ACCESS PROCEDURE:

See Notification section above.

CONTESTING RECORD PROCEDURE:

See Notification section above.

RECORD SOURCE CATEGORIES:

Applicant, claimant or his or her representative, physicians, employers,

labor organizations, federal, state, and local government agencies, all Railroad Retirement Board files, insurance companies, attorneys, Congressmen, liable parties (in personal injury cases), funeral homes and survivors (for payment of death benefits).

EXEMPTIONS CLAIMED FOR THE SYSTEM:

None.

* * * * *

RRB–22

SYSTEM NAME:

Railroad Retirement, Survivor, and Pensioner Benefit System.

SYSTEM LOCATION:

U.S. Railroad Retirement Board, 844 Rush Street, Chicago, Illinois 60611 Regional and District Offices: See Appendix I for addresses.

SECURITY CLASSIFICATION:

None.

CATEGORIES OF INDIVIDUALS COVERED BY THE SYSTEM:

Applicants for retirement and survivor benefits, their dependents (spouses, divorced spouses, children, parents, grandchildren), individuals who filed for lump-sum death benefits and/or residual payments.

CATEGORIES OF RECORDS IN THE SYSTEM:

Information pertaining to the payment or denial of an individual's claim for benefits under the Railroad Retirement Act: Name, address, Social Security number, claim number, proofs of age, marriage, relationship, military service, creditable earnings and service months (including military service), entitlement to benefits under the Social Security Act, programs administered by the Veterans Administration, or other benefit systems, rates, effective dates, medical reports, correspondence and telephone inquiries to and about the beneficiary, suspension and termination dates, health insurance effective date, option, premium rate and deduction, direct deposit data, employer pension information, citizenship status and legal residency status (for annuitants living outside the United States), and tax withholding information (instructions of annuitants regarding number of exemptions claimed and additional amounts to be withheld, as well as actual amounts withheld for tax purposes).

AUTHORITY FOR MAINTENANCE OF THE SYSTEM:

Section 7(b)(6) of the Railroad Retirement Act of 1974 (U.S.C. 231f(b)(6)).

PURPOSE(S):

Records in this system of records are maintained to administer the benefit provisions of the Railroad Retirement Act, sections of the Internal Revenue Code related to the taxation of railroad retirement benefits, and Title XVIII of the Social Security Act as it pertains to Medicare coverage for railroad retirement beneficiaries.

ROUTINE USES OF RECORDS MAINTAINED IN THE SYSTEM, INCLUDING CATEGORIES OF USERS, AND THE PURPOSES OF SUCH USES:

a. Beneficiary identifying information may be disclosed to third party contacts to determine if incapacity of the beneficiary or potential beneficiary to understand or use benefits exists, and to determine the suitability of a proposed representative payee.

b. In the event the Board has determined to designate a person to be the representative payee of an incompetent beneficiary, disclosure of information concerning the benefit amount and other similar information may be made to the representative payee from the record of the individual.

c. Entitlement and benefit rates may be released to primary beneficiaries regarding secondary beneficiaries (or vice versa) when the addition of such beneficiary affects either the entitlement or benefit payment.

d. Identifying information such as full name, address, date of birth, Social Security number, employee identification number, and date last worked, may be released to any last employer to verify entitlement for benefits under the Railroad Retirement Act.

e. Beneficiary identifying information, address, check rates, number and date may be released to the Department of the Treasury to control for reclamation and return of outstanding benefit payments, to issue benefit payments, act on report of non-receipt, to insure delivery of payments to the correct address of the beneficiary or representative payee or to the proper financial organization, and to investigate alleged forgery, theft or unlawful negotiation of railroad retirement benefit checks or improper diversion of payments directed to a financial organization.

f. Beneficiary identifying information, address, check rate, date, number and other supporting evidence may be released to the U.S. Postal Service for investigation of alleged forgery or theft of railroad retirement or Social Security benefit checks.

g. Beneficiary identifying information, entitlement data, medical evidence and related evaluatory data and benefit rate may be released to the Social Security Administration and the Centers for Medicare & Medicaid Services to correlate actions with the administration of Title II and Title XVIII of the Social Security Act, as amended.

h. Beneficiary identifying information, including Social Security account number, and supplemental annuity amounts may be released to the Internal Revenue Service, State and local taxing authorities for tax purposes (Form G–1099, for those annuitants receiving supplemental annuities).

i. Beneficiary identifying information, entitlement, benefit rates, medical evidence and related evaluatory data, and months paid may be furnished to the Veterans Administration for the purpose of assisting that agency in determining eligibility for benefits or verifying continued entitlement to and the correct amount of benefits payable under programs which it administers.

j. Beneficiary identifying information, entitlement data and benefit rates may be released to the Department of State and embassy and consular officials, the American Institute on Taiwan, and to the Veterans Administration Regional Office, Philippines, to aid in the development of applications, supporting evidence, and the continued eligibility of beneficiaries and potential beneficiaries living abroad.

k. Beneficiary identifying information, entitlement, benefit rates and months paid may be released to the Social Security Administration (Bureau of Supplemental Security Income) the Centers for Medicare & Medicaid Services, to federal, state and local welfare or public aid agencies to assist them in processing applications for benefits under their respective programs.

l. The last addresses and employer information may be released to the Department of Health and Human Services in conjunction with the Parent Locator Service.

m. Beneficiary identifying information, entitlement, rate and other pertinent data may be released to the Department of Labor in conjunction with payment of benefits under the Federal Coal Mine and Safety Act.

n. Medical evidence may be released to Board-appointed medical examiners to carry out their functions.

o. Information obtained in the administration of Title XVIII (Medicare) which may indicate unethical or unprofessional conduct of a physician or practitioner providing services to beneficiaries may be released to Professional Standards Review Organizations and State Licensing Boards.

p. Information necessary to study the relationship between benefits paid by the Railroad Retirement Board and civil service annuities may be released to the Office of Personnel Management.

q. Records may be disclosed to the General Accountability Office for auditing purposes and for collection of debts arising from overpayments under Title II and Title XVIII of the Social Security Act, as amended, or the Railroad Retirement Act.

r. Pursuant to a request from an employer covered by the Railroad Retirement Act or the Railroad Unemployment Insurance Act, or from an organization under contract to an employer or employers, information regarding the Board's payment of retirement benefits, the methods by which such benefits are calculated, entitlement data and present address may be released to the requesting employer or the organization under contract to an employer or employers for the purposes of determining entitlement to and rates of private supplemental pension, sickness or unemployment benefits and to calculate estimated benefits due.

s. If a request for information pertaining to an individual is made by an official of a labor organization of which the individual is a member and the request is made on behalf of the individual, information from the record of the individual concerning his benefit or anticipated benefit and concerning the method of calculating that benefit may be disclosed to the labor organization official.

t. Records may be disclosed in a court proceeding relating to any claims for benefits by the beneficiary under the Railroad Retirement Act, and may be disclosed during the course of an administrative appeal to individuals who need the records to prosecute or decide the appeal or to individuals who are requested to provide information relative to an issue involved in the appeal.

u. The amount of a residual lump-sum payment and the identity of the payee may be released to the Internal Revenue Service for tax audit purposes.

v. The amount of any death benefit or annuities accrued but unpaid at death and the identity of such payee may be released to the appropriate state taxing authorities for tax assessment and auditing purposes.

w. Beneficiary identifying information, including but not limited to name, address, Social Security account number, payroll number and occupation, the fact of entitlement and benefit rate may be released to the Pension Benefit Guaranty Corporation to enable that agency to determine and pay supplemental pensions to qualified railroad retirees.

x. Medical records may be disclosed to vocational consultants in administrative proceedings.

y. Date employee filed application for annuity to the last employer under the Railroad Retirement Act for use in determining entitlement to continued major medical benefits under insurance programs negotiated with labor organizations.

z. Information regarding the determination and recovery of an overpayment made to an individual may be released to any other individual from whom any portion of the overpayment is being recovered.

aa. The name and address of an annuitant may be released to a Member of Congress when the Member requests it in order that he or she may communicate with the annuitant about legislation which affects the railroad retirement system.

bb. Certain identifying information about annuitants, such as name, Social Security number, RRB claim number, and date of birth, as well as address, year and month last worked for a railroad, last railroad occupation, application filing date, annuity beginning date, identity of last railroad employer, total months of railroad service, sex, disability onset date, disability freeze onset date, and cause and effective date of annuity termination may be furnished to insurance companies for administering group life and medical insurance plans negotiated between certain participating railroad employers and railway labor organizations.

cc. For payments made after December 31, 1983, beneficiary identifying information, address, amounts of benefits paid and repaid, beneficiary withholding instructions, and amounts withheld by the RRB for tax purposes may be furnished to the Internal Revenue Service for tax administration purposes.

dd. Last address and beneficiary identifying information may be furnished to railroad employers for the purpose of mailing railroad passes to retired employees and their families.

ee. Entitlement data and benefits rates may be released to any court, state agency, or interested party, or to the representative of such court, state agency, or interested party, in connection with contemplated or actual legal or administrative proceedings concerning domestic relations and support matters.

ff. Identifying information about annuitants and applicants may be furnished to agencies and/or companies from which such annuitants and applicants are receiving or may receive worker's compensation, public pension, or public disability benefits in order to verify the amount by which Railroad Retirement Act benefits must be reduced, where applicable.

gg. Disability annuitant identifying information may be furnished to state employment agencies for the purpose of determining whether such annuitants were employed during times they receive disability benefits.

hh. Identifying information about Medicare-entitled beneficiaries who may be working may be disclosed to the Centers for Medicare & Medicaid Services for the purposes of determining whether Medicare should be the secondary payer of benefits for such individuals.

ii. Disclosure of information in claim folders is authorized for bonafide researchers doing epidemiological/mortality studies approved by the RRB who agree to record only information pertaining to deceased beneficiaries.

jj. Identifying information for beneficiaries, such as name, SSN, and date of birth, may be furnished to the Social Security Administration and to any State for the purpose of enabling the Social Security Administration or State through a computer or manual matching program to assist the RRB in identifying female beneficiaries who remarried but who may not have notified the RRB of their remarriage.

kk. An employee's date last worked, annuity filing date, annuity beginning date, and the month and year of death may be furnished to AMTRAK when such information is needed by AMTRAK to make a determination whether to award a travel pass to either the employee or the employee's widow.

ll. The employee's Social Security number may be disclosed to an individual eligible for railroad retirement benefits on the employee's earnings record when the employee's Social Security number would be contained in the railroad retirement claim number.

DISCLOSURE TO CONSUMER REPORTING AGENCIES:

None.

POLICIES AND PRACTICES FOR STORING, RETRIEVING, ACCESSING, RETAINING, AND DISPOSING OF RECORDS IN THE SYSTEM:

STORAGE:

Paper, microforms, magnetic tape and magnetic disk.

RETRIEVABILITY:

Claim number, Social Security number and full name.

SAFEGUARDS:

Paper and Microforms: Maintained in areas not accessible to the public in metal filing cabinets. Access is limited to authorized RRB employees. Offices are locked during non-business hours. Building has 24 hour on-site security officers, closed circuit television monitoring and intrusion detection systems.

Magnetic tape and disks: Computer and computer storage rooms are restricted to authorized personnel; on-line query safeguards include a lock/unlock password system, a terminal oriented transaction matrix, role based access controls and audit trail. For electronic records, system securities are established in accordance with National Institute of Standards and Technology (NIST) guidelines, including network monitoring, defenses in-depth, incident response and forensics. In addition to the on-line query safeguards, they include encryption of all data transmitted and exclusive use of leased telephone lines.

RETENTION AND DISPOSAL:

Paper: Identify and transfer inactive folders to FRC periodically, Transfer to National Archives 7 years after the close of the fiscal year folders were determined to be inactive.

Electronically imaged documents: Destroy 90 days after the date scanned into the system or after completion of the quality assurance process, whichever is later.

Magnetic tape: Magnetic tape records are used to daily update the disk file, are retained for 90 days and then written over. For disaster recovery purposes certain tapes are stored 12–18 months.

Magnetic disk: Continually updated and permanently retained.

Electronically imaged documents. Destroy/delete individual claimant data 7 years after the close of the fiscal year determined to be inactive.

SYSTEM MANAGER(S) AND ADDRESS:

Office of Programs—Director of Policy and Systems, Railroad Retirement Board, 844 Rush Street, Chicago, Illinois 60611–2092

NOTIFICATION PROCEDURE:

Requests for information regarding an individual's records should be in writing, including the full name, Social Security number and railroad retirement claim number (if any) of the individual. Before information about any records will be released, the individual may be required to provide proof of identity, or authorization from the individual to permit release of information. Such requests should be sent to: Office of Programs—Director of Operations, Railroad Retirement Board, 844 Rush Street, Chicago, Illinois 60611–2092.

RECORD ACCESS PROCEDURE:

See Notification section above.

CONTESTING RECORD PROCEDURE:

See Notification section above.

RECORD SOURCE CATEGORIES:

Individual applicants or their representatives, railroad employers, other employers, physicians, labor organizations, federal, state and local government agencies, attorneys, funeral homes, congressmen, schools, foreign government.

EXEMPTIONS CLAIMED FOR THE SYSTEM:

None.

* * * * *

RRB–23–25 [Reserved]

* * * * *

RRB–26

SYSTEM NAME:

Payment, Rate and Entitlement History File.

SYSTEM LOCATION:

U.S. Railroad Retirement Board, 844 Rush Street, Chicago, Illinois 60611.

SECURITY CLASSIFICATION:

None

CATEGORIES OF INDIVIDUALS COVERED BY THE SYSTEM:

Individuals who have received or are receiving benefits under the Railroad Retirement Act or the Social Security Act, including retired and disabled railroad employees, their qualified spouses, dependents, and survivors, and recipients of other, non-recurring benefits.

CATEGORIES OF RECORDS IN THE SYSTEM:

Data supporting the benefits and historical data recording the benefits paid to the above categories of individuals under the Railroad Retirement and Social Security Acts. Includes name, address, Social Security number, claim number, date of birth, dates of military service, creditable service months, amounts of benefits received under the Social Security Act, components of and final rates payable under the Railroad Retirement Act, health insurance premium deduction, direct deposit data, employer pension information and tax withholding information (actual amounts withheld for tax purposes).

AUTHORITY FOR MAINTENANCE OF THE SYSTEM:

Section 7(b)(6) of the Railroad Retirement Act of 1974 (45 U.S.C. 231f(b)(6))

PURPOSE(S):

The purpose of this system is to record in one file all data concerning payment, rate, and entitlement history for recipients of Railroad Retirement benefits.

ROUTINE USES OF RECORDS MAINTAINED IN THE SYSTEM, INCLUDING CATEGORIES OF USERS, AND THE PURPOSES OF SUCH USES:

a. Records may be released to the Internal Revenue Service for the purpose of their checking amounts shown on individual tax returns as pensions and annuities received under the Railroad Retirement Act.

b. Benefit data regarding persons who, it is determined, are both RRB and VA beneficiaries may be furnished to the Veterans Administration for the purpose of assisting the VA in the administration of its income dependent benefit programs.

c. Disability annuitant identifying information may be furnished to state employment agencies for the purpose of determining whether such annuitants were employed during times they receive disability benefits.

d. Identifying information about Medicare-entitled beneficiaries who may be working may be disclosed to the Centers for Medicare & Medicaid Services for the purposes of determining whether Medicare should be the secondary payer of benefits for such individuals.

e. Benefit information may be furnished to state agencies for the purposes of determining entitlement or continued entitlement to state income-dependent benefits and, if entitled, to adjusting such benefits to the amount to which the individual is entitled under state law, provided the state agency furnishes identifying information for the individuals for whom it wants the RRB benefit information.

DISCLOSURE TO CONSUMER REPORTING AGENCIES:

None.

POLICIES AND PRACTICES FOR STORING, RETRIEVING, ACCESSING, RETAINING, AND DISPOSING OF RECORDS IN THE SYSTEM:

STORAGE:

Magnetic tape and magnetic disk.

RETRIEVABILITY:

By claim number or beneficiary's Social Security number.

SAFEGUARDS:

Computer and computer storage rooms are restricted to authorized

personnel; on-line query safeguards include a lock/unlock password system, a terminal oriented transaction matrix, role based access controls and audit trail. For electronic records, system securities are established in accordance with National Institute of Standards and Technology (NIST) guidelines, including network monitoring, defenses in-depth, incident response and forensics. In addition to the on-line query safeguards, they include encryption of all data transmitted and exclusive use of leased telephone lines.

RETENTION AND DISPOSAL:

Magnetic tape: Magnetic tape records are retained for six months. Activity record tapes are maintained for 15 months. For disaster recovery purposes certain tapes are stored for three years. When no longer needed, they are over-written following NIST guidelines.

Magnetic disk: Non-Generational (unique) datasets are updated and permanently retained. Generational datasets are maintained in a rolling archive as they are created with the oldest dataset being replaced by the newest one. Normal lifespan for a generational dataset is 6–8 months, at which point it is over-written. When magnetic disk or other electronic media is no longer required or servicable, it is sanitized in accordance with NIST guidelines.

SYSTEM MANAGER(S) AND ADDRESS:

Supervisory Data Manager, Bureau of Information Services, Information Resources Management Center, U.S. Railroad Retirement Board, 844 Rush Street, Chicago, Illinois 60611–2092.

NOTIFICATION PROCEDURE:

Requests for information regarding an individual's record should be in writing addressed to the System Manager identified above, including the full name and Social Security number and claim number of the individual. Before information about any record will be released, the System Manager may require the individual to provide proof of identity or require the requester to furnish an authorization from the individual to permit release of information.

RECORD ACCESS PROCEDURE:

See Notification section above.

CONTESTING RECORD PROCEDURE:

See Notification section above.

RECORD SOURCE CATEGORIES:

Transmissions from the following computerized systems: Railroad Retirement Act benefit payment; Social Security benefit payment; disability rating decisions; and primary insurance amount calculations.

EXEMPTIONS CLAIMED FOR THE SYSTEM:

None.

* * * * *

RRB–27

SYSTEM NAME:

Railroad Retirement Board-Social Security Administration Financial Interchange System.

SYSTEM LOCATION:

U.S. Railroad Retirement Board, 844 Rush Street, Chicago, Illinois 60611.

SECURITY CLASSIFICATION:

None.

CATEGORIES OF INDIVIDUALS COVERED BY THE SYSTEM:

One-percent sample of former railroad employees and members of their families who would have been eligible for Social Security benefits if railroad employment had been covered by the Social Security system.

CATEGORIES OF RECORDS IN THE SYSTEM:

Claim number, Social Security number, date of birth, and administrative cost and payment data on imputed and actual Social Security benefits.

AUTHORITY FOR MAINTENANCE OF THE SYSTEM:

Section 7(c)(2) of the Railroad Retirement Act of 1974 (45 U.S.C. 231f(c)(2))

PURPOSE(S):

The purpose of this system is to calculate benefit amounts required to determine the financial interchange transfer amounts each year.

ROUTINE USES OF RECORDS MAINTAINED IN THE SYSTEM, INCLUDING CATEGORIES OF USERS, AND THE PURPOSES OF SUCH USES:

a. Findings, including individual records, may be released to the Social Security Administration, determining amounts which, if added to or subtracted from the OASDI Trust Funds, would place the Social Security Administration in the position it would have been if employment covered by the Railroad Retirement Act had been covered by the Social Security and Federal Insurance Contributions Acts.

b. Information may be released to the Government Accountability Office for auditing purposes.

DISCLOSURE TO CONSUMER REPORTING AGENCIES:

None.

POLICIES AND PRACTICES FOR STORING, RETRIEVING, ACCESSING, RETAINING, AND DISPOSING OF RECORDS IN THE SYSTEM:

STORAGE:

Paper, Magnetic tape and Magnetic disk.

RETRIEVABILITY:

Claim and Social Security account numbers.

SAFEGUARDS:

Paper: Maintained in areas not accessible to the public in metal filing cabinets. Access is limited to authorized RRB employees. Offices are locked during non-business hours. Building has 24 hour on-site security officers, closed circuit television monitoring and intrusion detection systems.

Magnetic tape and magnetic disk: Computer and computer storage rooms are restricted to authorized personnel; on-line query safeguards include a lock/unlock password system, a terminal oriented transaction matrix, role based access controls and audit trail. For electronic records, system securities are established in accordance with National Institute of Standards and Technology (NIST) guidelines, including network monitoring, defenses in-depth, incident response and forensics. In addition to the on-line query safeguards, they include encryption of all data transmitted and exclusive use of leased telephone lines.

RETENTION AND DISPOSAL:

Retained indefinitely, except that periodically, inactive materials are sent to the Federal Records Center to be retained for ten years, then destroyed by the General Services Administration in accordance with NIST guidance.

SYSTEM MANAGER(S) AND ADDRESS:

Chief, Financial Interchange Division, Bureau of the Actuary, U.S. Railroad Retirement Board, 844 North Rush Street, Chicago, Illinois 60611–2092.

NOTIFICATION PROCEDURE:

Requests for information regarding an individual's record should be in writing addressed to the System Manager identified above, including the full name and Social Security account number and claim number of the individual. Before information about any record will be released, the System Manager may require the individual to provide proof of identity or require the requester to furnish an authorization from the individual to permit release of information.

RECORD ACCESS PROCEDURE:

See Notification section above.

CONTESTING RECORD PROCEDURE:

See Notification section above.

RECORD SOURCE CATEGORIES:

The Social Security Administration and other Railroad Retirement Board files.

EXEMPTIONS CLAIMED FOR THE SYSTEM:

None.

* * * * *

RRB–28 [Reserved]

* * * * *

RRB–29

SYSTEM NAME:

Railroad Employees' Annual Gross Earnings Master File.

SYSTEM LOCATION:

U.S. Railroad Retirement Board, 844 Rush Street, Chicago, Illinois 60611.

SECURITY CLASSIFICATION:

None.

CATEGORIES OF INDIVIDUALS COVERED BY THE SYSTEM:

Railroad workers whose Social Security account number ends in "30".

CATEGORIES OF RECORDS IN THE SYSTEM:

Gross earnings by individual by month, quarter or year.

AUTHORITY FOR MAINTENANCE OF THE SYSTEM:

Section 7(c)(2) of the Railroad Retirement Act of 1974 (45 U.S.C. 231f(c)(2))

PURPOSE(S):

The purpose of this system is to maintain gross earnings reports for Financial Interchange sample employees for use in the calculation of payroll tax amounts used in the financial interchange determinations.

ROUTINE USES OF RECORDS MAINTAINED IN THE SYSTEM, INCLUDING CATEGORIES OF USERS, AND THE PURPOSES OF SUCH USES:

None.

DISCLOSURE TO CONSUMER REPORTING AGENCIES:

None.

POLICIES AND PRACTICES FOR STORING, RETRIEVING, ACCESSING, RETAINING, AND DISPOSING OF RECORDS IN THE SYSTEM:

STORAGE:

Paper, Magnetic tape and Magnetic disk.

RETRIEVABILITY:

Social Security account number.

SAFEGUARDS:

Paper: Maintained in areas not accessible to the public in metal filing cabinets. Access is limited to authorized RRB employees. Offices are locked during non-business hours. Building has 24 hour on-site security officers, closed circuit television monitoring and intrusion detection systems.

Magnetic tape and magnetic disk: Computer and computer storage rooms are restricted to authorized personnel; on-line query safeguards include a lock/unlock password system, a terminal oriented transaction matrix, role based access controls and audit trail. For electronic records, system securities are established in accordance with National Institute of Standards and Technology (NIST) guidelines, including network monitoring, defenses in-depth, incident response and forensics. In addition to the on-line query safeguards, they include encryption of all data transmitted and exclusive use of leased telephone lines.

RETENTION AND DISPOSAL:

Paper: Original reports retained for six years, Final summarized file retained for five years, then destroyed in accordance with NIST guidelines.

Magnetic tape: Magnetic tape records are retained for 90 days and then written over following NIST guidelines. For disaster recovery purposes certain tapes are stored 12–18 months.

Magnetic disk: Original reports retained for six years, Final summarized file retained for five years, after which the data is securely erased. When magnetic disk or other electronic media is no longer required or servicable, it is sanitized in accordance with NIST guidelines.

SYSTEM MANAGER(S) AND ADDRESS:

Chief of Benefit and Employment Analysis, Bureau of the Actuary, U.S. Railroad Retirement Board, 844 N. Rush Street, Chicago, Illinois 60611–2092

NOTIFICATION PROCEDURE:

Requests for information regarding an individual's record should be in writing addressed to the System Manager identified above, including the full name and Social Security account number and claim number of the individual. Before information about any record will be released, the System Manager may require the individual to provide proof of identity or require the requester to furnish an authorization from the individual to permit release of information.

RECORD ACCESS PROCEDURE:

See Notification section above.

CONTESTING RECORD PROCEDURE:

See Notification section above.

RECORD SOURCE CATEGORIES:

Railroad employers.

EXEMPTIONS CLAIMED FOR THE SYSTEM:

None.

* * * * *

RRB–30–32 [Reserved]

* * * * *

RRB–33

SYSTEM NAME:

Federal Employee Incentive Awards System.

SYSTEM LOCATION:

U.S. Railroad Retirement Board, 844 Rush Street, Chicago, Illinois 60611.

SECURITY CLASSIFICATION:

None.

CATEGORIES OF INDIVIDUALS COVERED BY THE SYSTEM:

Railroad Retirement Board employees who have submitted suggestions or have been nominated for awards.

CATEGORIES OF RECORDS IN THE SYSTEM:

Employee suggestions, special achievement awards, quality increase awards, public service awards, government-sponsored awards, performance awards, and time off awards.

AUTHORITY FOR MAINTENANCE OF THE SYSTEM:

Chapter 45, Title 5, U.S. Code.

PURPOSE(S):

Past suggestion and award nominations and awards presented are maintained to provide historical and statistical records.

ROUTINE USES OF RECORDS MAINTAINED IN THE SYSTEM, INCLUDING CATEGORIES OF USERS, AND THE PURPOSES OF SUCH USES:

a. Information may be released to the public media for public relations purposes.

b. Records may be disclosed to the General Accountability Office for auditing purposes.

DISCLOSURE TO CONSUMER REPORTING AGENCIES:

None.

POLICIES AND PRACTICES FOR STORING, RETRIEVING, ACCESSING, RETAINING, AND DISPOSING OF RECORDS IN THE SYSTEM:

STORAGE:

Paper.

RETRIEVABILITY:

System indexed by number assigned when suggestion or nomination is received. Suggestions are cross-referenced by name of suggester and subject of suggestion.

SAFEGUARDS:

Maintained in areas not accessible to the public in metal filing cabinets. Access is limited to authorized RRB employees. Offices are locked during non-business hours. Building has 24 hour on-site security officers, closed circuit television monitoring and intrusion detection systems.

RETENTION AND DISPOSAL:

Denied suggestions are purged and destroyed five years after denial date in accordance with NIST guidelines. Adopted suggestions are retained permanently as are all special achievement awards, quality increase and public service awards, RRB Award for Excellence, and government-sponsored awards.

SYSTEM MANAGER(S) AND ADDRESS:

Director of Human Resources, U.S. Railroad Retirement Board, 844 Rush Street, Chicago, Illinois 60611

NOTIFICATION PROCEDURE:

Requests for information regarding an individual's record should be in writing addressed to the System Manager identified above, including the full name and Social Security number of the individual. Before information about any record will be released, the System Manager may require the individual to provide proof of identity or require the requester to furnish an authorization from the individual to permit release of information.

RECORD ACCESS PROCEDURE:

See Notification section above.

CONTESTING RECORD PROCEDURE:

See Notification section above.

RECORD SOURCE CATEGORIES:

Suggestion or award submitted by suggester or nominator. Suggestions submitted by employees; recommendations for award submitted by supervisory personnel.

EXEMPTIONS CLAIMED FOR THE SYSTEM:

None.

* * * * *

RRB–34

SYSTEM NAME:

Employee Personnel Management Files.

SYSTEM LOCATION:

U.S. Railroad Retirement Board, 844 Rush Street, Chicago, Illinois 60611.

SECURITY CLASSIFICATION:

None.

CATEGORIES OF INDIVIDUALS COVERED BY THE SYSTEM:

Current employees of the U.S. Railroad Retirement Board.

CATEGORIES OF RECORDS IN THE SYSTEM:

Name, address and phone number of the person to notify in case of emergency and personal physician; copies of SF–52, Request for Personnel Action, SF–50, Personnel Action, service computation date form, performance ratings, other awards and nominations for recognition, supervisory informal and formal written notes, memorandums, etc., relative to admonishment, caution, warnings, reprimand or similar notices, within-grade increase materials, SF–171, Employment Application, official position descriptions, task lists and performance plans, information concerning training received and seminars attended, and miscellaneous correspondence.

AUTHORITY FOR MAINTENANCE OF THE SYSTEM:

Section 7(b)(9) of the Railroad Retirement Act of 1974 (45 U.S.C. 231f(b)(9)) and the Federal Personnel Manual 293–31—Subchapter S–8.

PURPOSE(S):

The system is maintained to provide information to managers and supervisors to assist in their work, and meet OPM regulations.

ROUTINE USES OF RECORDS MAINTAINED IN THE SYSTEM, INCLUDING CATEGORIES OF USERS, AND THE PURPOSES OF SUCH USES:

a. Records may be disclosed in a court proceeding and may be disclosed during the course of an administrative appeal to individuals who need the records to prosecute or decide the appeal or to individuals who are requested to provide information relative to an issue involved in the appeal.

b. A record from this system of records may be disclosed to a federal agency, in response to its request, in connection with the hiring or retention of an employee, the issuance of a security clearance, the reporting of an investigation of an employee, the letter of a contract, or the issuance of a license, grant, or other benefit by the requesting agency, to the extent that the information is relevant and necessary to the requesting agency's decision on the matter.

c. Information in this system of records may be released to the attorney representing such individual, upon receipt of a written letter or declaration stating the fact of representation, subject to the same procedures and regulatory prohibitions as the subject individual.

DISCLOSURE TO CONSUMER REPORTING AGENCIES:

None.

POLICIES AND PRACTICES FOR STORING, RETRIEVING, ACCESSING, RETAINING, AND DISPOSING OF RECORDS IN THE SYSTEM:

STORAGE:

Paper and General Services Administration (GSA) Comprehensive Human Resources Integrated System (CHRIS) information system.

RETRIEVABILITY:

Name of employee.

SAFEGUARDS:

Paper: Maintained in areas not accessible to the public in metal filing cabinets. Access is limited to authorized RRB employees. Offices are locked during non-business hours. Building has 24 hour on-site security officers, closed circuit television monitoring and intrusion detection systems..

GSA CHRIS: The General Services Administration (GSA) is responsible for and provides safeguards in accordance with Federal guidelines for this information system.

RETENTION AND DISPOSAL:

The paper folder is maintained for the period of the employee's service in the agency and is then transferred to the National Personnel Records Center for storage or, to the next employing Federal agency. Other records are either retained at the agency for various lengths of time in accordance with the National Archives and Records Administration records schedules or destroyed, in accordance with NIST guidelines, when they have served their purpose or when the employee leaves the agency.

SYSTEM MANAGER(S) AND ADDRESS:

Director of Human Resources, U.S. Railroad Retirement Board, 844 Rush Street, Chicago, Illinois 60611.

NOTIFICATION PROCEDURE:

Requests for information regarding an individual's record should be addressed to the System Manager identified above, including the full name and Social Security number of the individual. Before information about any record will be released, the System Manager may require the individual to provide proof of identity or require the requester to furnish an authorization from the individual to permit release of information.

RECORD ACCESS PROCEDURE:

See Notification section above.

CONTESTING RECORD PROCEDURE:

See Notification section above.

RECORD SOURCE CATEGORIES:

Employee, agency officials and management personnel.

EXEMPTIONS CLAIMED FOR THE SYSTEM:

None.

* * * * *

RRB–35 [Reserved]

* * * * *

RRB–36

SYSTEM NAME:

Complaint, Grievance, Disciplinary and Adverse Action Files.

SYSTEM LOCATION:

U.S. Railroad Retirement Board, 844 Rush Street, Chicago, Illinois 60611.

SECURITY CLASSIFICATION:

None.

CATEGORIES OF INDIVIDUALS COVERED BY THE SYSTEM:

Railroad Retirement Board employees who are the subjects of disciplinary or adverse actions or who have filed a complaint or grievance.

CATEGORIES OF RECORDS IN THE SYSTEM:

Information relating to proposals and decisions in cases of discipline and adverse actions; including supporting documents; information relating to grievances filed under the agency and negotiated grievance procedures, including the grievance, final decision and any evidence submitted by the employee and/or the agency in support of or contesting the grievance.

AUTHORITY FOR MAINTENANCE OF THE SYSTEM:

5 U.S.C. 7503(c), 7513(e), 7543(e).

PURPOSE(S):

The purpose of this system of records is to maintain information related to grievances, disciplinary actions, and adverse actions in order to furnish information to arbitrators, EEO investigators, the Merit Systems protection Board, the Federal Labor Relations Authority, and the Courts, as necessary. The information is also used for statistical purposes, as needed.

ROUTINE USES OF RECORDS MAINTAINED IN THE SYSTEM, INCLUDING CATEGORIES OF USERS, AND THE PURPOSES OF SUCH USES:

a. Information in this system of records may be released to the attorney representing such individual, upon receipt of a written letter or declaration stating the fact of representation, subject to the same procedures and regulatory prohibitions as the subject individual.

b. Records may be disclosed to the Merit Systems Protection Board or an arbitrator to adjudicate an appeal, complaint, or grievance.

DISCLOSURE TO CONSUMER REPORTING AGENCIES:

None.

POLICIES AND PRACTICES FOR STORING, RETRIEVING, ACCESSING, RETAINING, AND DISPOSING OF RECORDS IN THE SYSTEM:

STORAGE:

Paper.

RETRIEVABILITY:

Name of employee.

SAFEGUARDS:

Maintained in areas not accessible to the public in metal filing cabinets. Access is limited to authorized RRB employees. Offices are locked during non-business hours. Building has 24 hour on-site security officers, closed circuit television monitoring and intrusion detection systems.

RETENTION AND DISPOSAL:

Maintained for four years, then destroyed in accordance with NIST guidance.

SYSTEM MANAGER(S) AND ADDRESS:

Director of Human Resources, U.S. Railroad Retirement Board, 844 Rush Street, Chicago, Illinois 60611

NOTIFICATION PROCEDURE:

Requests for information regarding an individual's record should be addressed to the System Manager identified above and should include the name of the individual involved. Before information about any record will be released, the System Manager may require the individual to provide proof of identity or require the requester to furnish an authorization from the individual to permit release of information.

RECORD ACCESS PROCEDURE:

See Notification section above.

CONTESTING RECORD PROCEDURE:

See Notification section above.

RECORD SOURCE CATEGORIES:

The Railroad Retirement Board employee, the employee's supervisor, bureau or regional director, the executive director, or the employee's representative.

EXEMPTIONS CLAIMED FOR THE SYSTEM:

None.

* * * * *

RRB–37–41 [Reserved]

* * * * *

RRB–42

SYSTEM NAME:

Overpayment Accounts.

SYSTEM LOCATION:

U.S. Railroad Retirement Board, 844 Rush Street, Chicago, Illinois 60611.

SECURITY CLASSIFICATION:

None.

CATEGORIES OF INDIVIDUALS COVERED BY THE SYSTEM:

Individuals or businesses who were overpaid in the salaries or benefits they received from the Railroad Retirement Board. Benefits overpaid are further delineated in the following two categories.

—Individuals or businesses overpaid the following types of annuities or benefits payable under the Railroad Retirement Act: railroad retirement, disability, supplemental, and survivor.

—Individuals overpaid unemployment or sickness insurance benefits payable under the Railroad Unemployment Insurance Act.

CATEGORIES OF RECORDS IN THE SYSTEM:

Name, address, Social Security number, Railroad Retirement claim number, whether salary or benefit and if benefit type of benefit previously paid, amount of overpayment, debt identification number, cause of overpayment, source of overpayment, original debt amount, current balance of debt, installment repayment history, recurring accounts receivable administrative offset history, waiver, reconsideration and debt appeal status, general billing, dunning, referral, collection, and payment history, amount of interest and penalties assessed and collected, name of Federal agency to which account is referred for collection, date of such referral and amount collected.

AUTHORITY FOR MAINTENANCE OF THE SYSTEM:

Sec. 7(b)(6) of the Railroad Retirement Act of 1974 (45 U.S.C. 231f(b)(6)); sec. 12(l) of the Railroad Unemployment Insurance Act (45 U.S.C. 362(l)); Pub. L. 97–92, Joint Resolution; Pub. L. 97–365 (Debt Collection Act of 1982); Federal Claims Collection Act (31 U.S.C. 3701 *et. seq.*); Pub. L. 104–134 (Debt Collection Improvement Act of 1996), 5 U.S.C. section 5514 and 20 CFR part 361

PURPOSE(S):

The records in this system are created, monitored and maintained to enable the Railroad Retirement Board to fulfill regulatory and statutory fiduciary responsibilities to its trust funds, the individuals to whom it pays salaries or benefits and the Federal Government as directed under the Railroad Retirement Act, Railroad Unemployment Insurance

Act, Debt Collection Act of 1982, and the Debt Collection Improvement Act of 1996. These responsibilities include: Accurate and timely determination of debt; sending timely, accurate notice of the debt with correct repayment and rights options; taking correct and timely action when rights/appeals have been requested; assessing appropriate charges; using all appropriate collection tools, releasing required, accurate reminder notices; and correctly and timely entering all recovery, write-off and waiver offsets to debts.

ROUTINE USES OF RECORDS MAINTAINED IN THE SYSTEM, INCLUDING CATEGORIES OF USERS, AND THE PURPOSES OF SUCH USES:

a. Benefit overpayment amounts, history of collection actions and efforts, and personally identifiable information (name, address, Social Security number, railroad retirement claim number, etc.) may be disclosed to agencies of the Federal government for the purpose of recovering delinquent debts.

b. Federal salary overpayment amounts, history of collection actions and efforts, and personally identifiable information (name, address, Social Security number, etc.) may be disclosed to agencies of the Federal government for the purpose of recovering delinquent debts.

c. Personally identifiable information pertaining to delinquent benefit and Federal salary overpayments may be disclosed to the Department of the Treasury, Financial Management Service (FMS), for the purpose of collection through cross-servicing and offset of Federal payments. FMS may disclose this personally identifiable information to other agencies to conduct computer matching programs to identify and locate delinquent debtors who are receiving Federal salaries or benefit payments. FMS may refer these delinquent accounts and disclose pertinent information to other Federal agencies and private collection agencies for the purpose of collection.

d. Personally identifiable information may be released to any Federal agency for the purpose of enabling such agency to collect debts on the RRB's behalf.

e. If a request for information pertaining to an individual is made by an official of a labor organization of which the individual is a member and the request is authorized by the individual, information from the record of the individual concerning his overpayment may be disclosed to the labor organization official.

f. Records may be disclosed to the Government Accountability Office for auditing purposes.

DISCLOSURE TO CONSUMER REPORTING AGENCIES:

None.

POLICIES AND PRACTICES FOR STORING, RETRIEVING, ACCESSING, RETAINING, AND DISPOSING OF RECORDS IN THE SYSTEM:

STORAGE:

Paper, Magnetic tape, and Magnetic disk.

RETRIEVABILITY:

Salary overpayments are retrievable by Social Security number and name. Benefit overpayments are retrievable by Social Security number, Railroad Retirement claim number, and name.

SAFEGUARDS:

Salary overpayment records are maintained at the General Services Administration under safeguards equal to those of the Railroad Retirement Board (see GSA–PPFM–9).

Benefit overpayment records:

Paper: Maintained in areas not accessible to the public in metal filing cabinets. Access is limited to authorized RRB employees. Offices are locked during non-business hours. Building has 24 hour on-site security officers, closed circuit television monitoring and intrusion detection systems.

Magnetic tape and magnetic disk: Computer and computer storage rooms are restricted to authorized personnel; on-line query safeguards include a lock/unlock password system, a terminal oriented transaction matrix, role based access controls and audit trail. For electronic records, system securities are established in accordance with National Institute of Standards and Technology (NIST) guidelines, including network monitoring, defenses in-depth, incident response and forensics. In addition to the on-line query safeguards, they include encryption of all data transmitted and exclusive use of leased telephone lines.

RETENTION AND DISPOSAL:

Salary overpayments are maintained at the General Services Administration and follow that agency's retention and disposal guidelines.

Benefit overpayments.

Paper documents, with benefit overpayment data, are shredded three years after receipt. These records are identified and destroyed annually.

Magnetic tape and disk. Maintained in an on-line database. Overpayments are removed five years after balances reach $0.00. These records are identified and removed annually. Overpayments declared uncollectible and written off are removed ten years after being so declared. Removed records are written to tape and disk. The information written is general case history, which includes cause and type of overpayment, regular recovery actions, account adjustments resulting from posting interest, charges and cash receipts. Other activity, such as reconsideration, waiver and appeal actions, and delinquent recovery actions are also included. The tapes are retained for five years and, then, made available for overwrite. There is no retention schedule for records written to disk. When magnetic disk or other electronic media is no longer required or servicable, it is sanitized in accordance with NIST guidelines.

SYSTEM MANAGER(S) AND ADDRESS:

Salary overpayments: Director, General Services Administration National Payroll Center, Attention: 6BCY, 1500 Bannister Road, Kansas City, Missouri 64131–3088.

Benefit overpayments: Chief Financial Officer, U.S. Railroad Retirement Board, 844 Rush Street, Chicago, Illinois 60611.

NOTIFICATION PROCEDURE:

Requests for information regarding an individual's salary overpayment record should be in writing addressed to the Director, General Services Administration National Payroll Center at the address above.

Requests for information regarding an individual's or business' benefit overpayment record should be in writing addressed to the System Manager identified above, including the full name, claim number, and Social Security number of the individual. Before information about any record will be released, the System Manager may require the individual to provide proof of identity or require the requester to furnish an authorization from the individual to permit release of information.

RECORD ACCESS PROCEDURE:

See Notification section above.

CONTESTING RECORD PROCEDURE:

See Notification section above.

RECORD SOURCE CATEGORIES:

Salary overpayments: General Services Administration maintains RRB salary records, including records of amounts overpaid to Railroad Retirement Board employees. The RRB also maintains salary overpayment records in folders and other RRB systems of records.

Benefit overpayments: Railroad Retirement Board beneficiaries' overpayment records are contained in claim folders, the RRB's accounts

receivable system, and other RRB systems of records.

EXEMPTIONS CLAIMED FOR THE SYSTEM:

None.

* * * * *

RRB–43

SYSTEM NAME:

Investigation Files.

SYSTEM LOCATION:

Office of Inspector General, U.S. Railroad Retirement Board, 844 N Rush Street, Chicago, Illinois 60611.

SECURITY CLASSIFICATION:

None.

CATEGORIES OF INDIVIDUALS COVERED BY THE SYSTEM:

Any of the following categories of individuals on whom a complaint is made alleging a violation of law, regulation, or rule pertinent to the administration of programs by the RRB, or, with respect to RRB employees, alleging misconduct or conflict of interest in the discharge of their official duties: Current and former employees of the Retirement Railroad Board; contractors; subcontractors; consultants, applicants for, and current and former recipients of, benefits under the programs administered by the Railroad Retirement Board; officials and agents of railroad employers; members of the public who are alleged to have stolen or unlawfully received RRB benefit or salary or assisted in such activity; and others who furnish information, products, or services to the RRB.

CATEGORIES OF RECORDS IN THE SYSTEM:

Letters, memoranda, and other documents alleging a violation of law, regulation or rule, or alleging misconduct, or conflict of interest; reports of investigations to resolve allegations with related exhibits, statements, affidavits or records obtained during the investigation; recommendations on actions to be taken; transcripts of, and documentation concerning requests and approval for, consensual monitoring of communications; photographs, video and audio recordings made as part of the investigation; reports from law enforcement agencies; prior criminal or noncriminal records as they relate to the investigation; reports of actions taken by management personnel regarding misconduct; reports of legal actions resulting from violations referred to the Department of Justice or other law enforcement agencies for prosecution.

AUTHORITY FOR MAINTENANCE OF THE SYSTEM:

Inspector General Act of 1978; Pub. L. 95–452, 5 U.S.C. App., as amended.

PURPOSE(S):

The Office of Inspector General maintains this system of records to carry out its statutory responsibilities under the Inspector General Act. These responsibilities include a mandate to investigate allegations of fraud, waste, and abuse related to the programs and operations of the RRB and to refer such matters to the Department of Justice for prosecution.

ROUTINE USES OF RECORDS MAINTAINED IN THE SYSTEM, INCLUDING CATEGORIES OF USERS, AND THE PURPOSES OF SUCH USES:

a. Records may be disclosed to the Department of Justice or other law enforcement authorities in connection with actual or potential criminal prosecution or civil litigation initiated by the RRB, or in connection with requests by RRB for legal advice.

b. Records may be disclosed to a Federal agency which has requested information relevant or necessary to its hiring or retention of an employee or the issuance of a security clearance, provided that the subject individual is not an individual on whom the RRB has obtained information in conjunction with its administration of the Railroad Retirement Act, the Railroad Unemployment Act, the Milwaukee Railroad Restructuring Act, or the Rock Island Railroad Transition and Employee Assistance Act.

c. Records may be disclosed to members of the Council of Inspectors General for Integrity and Efficiency for the preparation of reports to the President and Congress on the activities of the Inspectors General.

d. Records may be disclosed to members of the Council of Inspectors General for Integrity and Efficiency, or the Department of Justice, as necessary, for the purpose of conducting qualitative assessment reviews of the investigative operations of RRB -OIG to ensure that adequate internal safeguards and management procedures are maintained.

DISCLOSURE TO CONSUMER REPORTING AGENCIES:

None.

POLICIES AND PRACTICES FOR STORING, RETRIEVING, ACCESSING, RETAINING, AND DISPOSING OF RECORDS IN THE SYSTEM:

STORAGE:

Paper, Magnetic tape and Magnetic disk.

RETRIEVABILITY:

Name, SSN, RRB Claim Number, and assigned number, all of which are cross-referenced to the other information.

SAFEGUARDS:

General access is restricted to the Inspector General and members of his staff; disclosure within the agency is on a limited need-to-know basis.

Paper: Maintained in areas not accessible to the public in metal filing cabinets. Offices are locked during non-business hours. Building has 24 hour on-site security officers, closed circuit television monitoring and intrusion detection systems.

Magnetic tape and magnetic disk: Computer and computer storage rooms are restricted to authorized personnel; on-line query safeguards include a lock/unlock password system, a terminal oriented transaction matrix, role based access controls and audit trail. For electronic records, system securities are established in accordance with National Institute of Standards and Technology (NIST) guidelines, including network monitoring, defenses in-depth, incident response and forensics. In addition to the on-line query safeguards, they include encryption of all data transmitted and exclusive use of leased telephone lines.

RETENTION AND DISPOSAL:

Paper: Retained for 10 years after the investigation has been closed. They are destroyed in accordance with NIST guidlines, in the fiscal year following the expiration of the 10-year retention period.

Magnetic tape: Magnetic tape records are retained for 90 days and then written over following NIST guidelines. For disaster recovery purposes certain tapes are stored 12–18 months.

Magnetic disk: Retained until no longer required for any operational or administrative purposes When magnetic disk or other electronic media is no longer required or servicable, it is sanitized in accordance with NIST guidelines.

SYSTEM MANAGER(S) AND ADDRESS:

Assistant Inspector General, Office of Inspector General, U.S. Railroad Retirement Board, 844 Rush Street, Chicago, Illinois 60611.

NOTIFICATION PROCEDURE:

Requests for information regarding an individual's record should be in writing addressed to the System Manager identified above, including the full name, claim number, and Social Security number of the individual. Before information about any record

will be released, the System Manager may require the individual to provide proof of identity or require the requester to furnish an authorization from the individual to permit release of information. Many records in this system are exempt from the notification requirements under 5 U.S.C. 552a(k). To the extent that records in this system of records are not subject to exemption, they are subject to notification. A determination whether an exemption applies shall be made at the time a request for notification is received.

RECORD ACCESS PROCEDURE:

Requests for access to the record of an individual and requests to contest such a record should be in writing addressed to the System Manager identified above, including the full name, claim number, and Social Security number of the individual. Before information about any record will be released, the System Manager may require the individual to provide proof of identity or require the requester to furnish an authorization from the individual to permit release of information. Many records in this system are exempt from the records access and contesting requirements under 5 U.S.C. 552a(k). To the extent that records in this system of records are not subject to exemption, they are subject to access and contest requirements. A determination as to whether an exemption applies shall be made at the time a request for access or contest is received.

CONTESTING RECORD PROCEDURE:

See notification section above.

RECORD SOURCE CATEGORIES:

The subject; the complainant; third parties, including but not limited to employers and financial institutions; local, state, and federal agencies; and other RRB record systems.

EXEMPTIONS CLAIMED FOR THE SYSTEM:

Pursuant to 5 U.S.C. 552a(j)(2) records in this system of records which are compiled for the purposes of criminal investigations are exempted from the requirements under 5 U.S.C. 552a(c)(3) and (4) (Accounting of Certain Disclosures), (d) (Access to Records), (e)(1), (2), (3), (4), (G), (H), and (I), (5) and (8) (Agency Requirements), (f) (Agency Rules), and (g) (Civil Remedies) of 5 U.S.C. 552a.

Pursuant to 5 U.S.C. 552a(k)(2) records in this system of records which consist of investigatory material compiled for law enforcement purposes are exempted from the notice, access and contest requirements under 5 U.S.C. 552a(c)(3), (d) (e)(1), (e)(4)(G), (H), and (I) and (f); however, if any individual is denied any right, privilege, or benefit to which the individual would otherwise be eligible as a result of the maintenance of such material, such material shall be provided to such individual except to the extent that disclosure of such material would reveal the identity of a source who furnished information to the Government under an express promise that the identity of the source would be held in confidence.

The reasons why the head of the Railroad Retirement Board decided to exempt this system of records under 5 U.S.C. 552a(k) are given in 20 CFR 200(f) and (g).

* * * * *

RRB–44–45 [Reserved]

* * * * *

RRB–46

SYSTEM NAME:

Personnel Security Files.

SYSTEM LOCATION:

U.S. Railroad Retirement Board, 844 North Rush Street, Chicago, Illinois 60611–2092.

SECURITY CLASSIFICATION:

None.

CATEGORIES OF INDIVIDUALS COVERED BY THE SYSTEM:

Current and former Railroad Retirement Board (RRB) employees and individuals being considered for possible employment, or contractor work, by the RRB.

CATEGORIES OF RECORDS IN THE SYSTEM:

Completed and signed suitability investigation requests; information concerning identity source documents; results of applicable background checks; copies of relevant material used to validate applicant's identity, including photos and fingerprint impressions. Records of actions taken by the Railroad Retirement Board in a personnel security investigation. If the action is favorable, the information will include identifying information and the action taken; if the action is unfavorable, the information will include the basis of the action which may be a summary of, or a selection, of information contained in an OPM investigation report. Information in an OPM investigation report may include: date and place of birth, marital status, dates and places of employment, foreign countries visited, membership in organizations, birth date and place of birth of relatives, arrest records, prior employment reports, dates and levels of clearances, and names of agencies and dates when, and reasons why, they were provided clearance information on Board employees.

NOTE: This system of records does not include the OPM investigation report itself, even though it is in possession of the Railroad Retirement Board. The report is covered under the system of records OPM Central-9. Access to the report is governed by OPM.

AUTHORITY FOR MAINTENANCE OF THE SYSTEM:

Executive Order 10450, OMB Circular A–130 dated December 15, 1985, and Homeland Security Presidential Directive 12.

PURPOSE(S):

The purpose of this system of records is to maintain files documenting the processing of investigations on RRB employees and applicants for employment or contract work used in making security/suitability determinations.

ROUTINE USES OF RECORDS MAINTAINED IN THE SYSTEM, INCLUDING CATEGORIES OF USERS, AND THE PURPOSES OF SUCH USES:

a. Records may be disclosed to the Office of Personnel Management in carrying out its functions.

b. Records may be disclosed to an agency in the executive, legislative, or judicial branch, or the District of Columbia Government, in response to its request, in connection with the hiring or retention of an employee, the issuance of a security clearance, the conducting of a security or suitability investigation of an individual, the classifying of jobs, the letting of a contract, or the issuance of a license, grant or other benefit by the requesting agency, to the extent that the information is relevant and necessary to the requesting agency's decision on the matter.

c. In the event of litigation where one of the parties is (1) the Board, any component of the Board, or any employee of the Board in his or her official capacity; (2) the United States where the Board determines that the claim, if successful, is likely to directly affect the operations of the Board or any of its components; or (3) any Board employee in his or her individual capacity where the Justice Department has agreed to represent such employees, the Board may disclose such records as it deems desirable or necessary to the Department of Justice to enable that Department to effectively represent such party, provided such disclosure is compatible with the purpose for which the records were collected.

d. Disclosure may be made to the PIV card applicant's representative at the

request of the individual who is applying for a PIV card with the RRB.

DISCLOSURE TO CONSUMER REPORTING AGENCIES:

None.

POLICIES AND PRACTICES FOR STORING, RETRIEVING, ACCESSING, RETAINING, AND DISPOSING OF RECORDS IN THE SYSTEM:

STORAGE:

Paper.

RETRIEVABILITY:

Name.

SAFEGUARDS:

The records are kept in secure storage, in a locked room. Access to RRB personnel security files is limited to the Director of Human Resources (Personnel Security Officer) and the Chief of Human Services and Labor Relations. Access to contractor personnel security files is limited to the Director of Administration. Access to OIG personnel security files is limited to the Assistant Inspector General for Investigations. Offices are locked during non-business hours. Building has 24 hour on-site security officers, closed circuit television monitoring and intrusion detection systems.

RETENTION AND DISPOSAL:

Destroy upon notification of death or not later than 5 years after separation or transfer of employee, whichever is applicable. Destruction is in accordance with NIST guidelines.

SYSTEM MANAGER(S) AND ADDRESS:

For RRB Employees: Human Resources Security Officer, U.S. Railroad Retirement Board, 844 North Rush Street, Chicago, Illinois 60611–2092

For RRB OIG Employees: Assistant Inspector General for Investigations, U.S. Railroad Retirement Board, 844 North Rush Street, Chicago, Illinois 60611–2092

For Contractors: Director of Administration, U.S. Railroad Retirement Board, 844 North Rush Street, Chicago, Illinois 60611–2092

NOTIFICATION PROCEDURE:

Requests for information regarding an individual's record should be in writing addressed to the System Manager identified above, including the full name and of the individual. Before information about any record will be released, the System Manager may require the individual to provide proof of identity or require the requester to furnish an authorization from the individual to permit release of information.

RECORD ACCESS PROCEDURE:

See Notification section above.

CONTESTING RECORD PROCEDURE:

See Notification section above.

RECORD SOURCE CATEGORIES:

The individual to whom the information applies, the Railroad Retirement Board, the Office of Personnel Management, the FBI and other law enforcement agencies, and other third parties.

EXEMPTIONS CLAIMED FOR THE SYSTEM:

None.

* * * * *

RRB–47 [Reserved]

* * * * *

RRB–48

SYSTEM NAME:

Physical Access Management System.

SYSTEM LOCATION:

U.S. Railroad Retirement Board, 844 North Rush Street, Chicago, Illinois 60611–2092.

SECURITY CLASSIFICATION:

None.

CATEGORIES OF INDIVIDUALS COVERED BY THE SYSTEM:

All Railroad Retirement Board employees, contractors, Federal agency tenant employees, and other persons assigned responsibilities that require the issuance of credentials for identification and/or access privileges to secure locations within the agency's headquarters facility.

CATEGORIES OF RECORDS IN THE SYSTEM:

Records of completed and signed RRB key card and personal identity verification (PIV) requests; name, photograph, signature, Social Security account number, date of birth, ID badge serial number, date and time of requests for access, system record of access granted and/or allowed.

AUTHORITY FOR MAINTENANCE OF THE SYSTEM:

Homeland Security Presidential Directive 12; Federal Information Processing Standards 201; Federal Property and Administrative Act of 1949, as amended.

PURPOSE(S):

The purpose of this system of records is to validate individuals who have been given credentials to access federally controlled property, secured areas or information systems.

ROUTINE USES OF RECORDS MAINTAINED IN THE SYSTEM, INCLUDING CATEGORIES OF USERS, AND THE PURPOSES OF SUCH USES:

a. Records may be disclosed to another Federal agency or to a court when the government is party to a judicial proceeding before the court.

b. Records may be disclosed to a Federal agency, on request, in connection with the hiring and/or retention of an employee.

c. Records may be disclosed to officials of the Merit Systems Protection Board, including the Office of Special Counsel; the Federal Labor Relations Authority and its General Counsel; or the Equal Employment Opportunity Commission when requested in the performance of their authorized duties.

d. Records may be disclosed to an authorized appeal or grievance examiner, formal complaints examiner, equal employment opportunity investigator, arbitrator, or other duly authorized official engaged in investigation or settlement of a grievance, complaint, or appeal filed by an employee to whom the information pertains.

e. Records may be disclosed to the agency's Office of Inspector General for any official investigation or review related to the programs and operations of the RRB.

f. Records may be disclosed to agency officials for any official investigation or review related to the programs and operations of the RRB.

DISCLOSURE TO CONSUMER REPORTING AGENCIES:

None.

POLICIES AND PRACTICES FOR STORING, RETRIEVING, ACCESSING, RETAINING, AND DISPOSING OF RECORDS IN THE SYSTEM:

STORAGE:

Paper and electronic records.

RETRIEVABILITY:

Name, badge serial number.

SAFEGUARDS:

The records are secured in a locked room. Access to records of completed and signed personal identity verification requests of RRB employees is limited to the Director of Human Resources. Access to all other records is limited to the Assistant to the Director of Administration. Access to the electronic records is limited to RRB employees and official designated as registrars, deputy-registrars and issuers; it is also controlled through a user id and password security process. The security mechanism also limits access to data based on a user's role needs for accessing the data.

RETENTION AND DISPOSAL:

Destroy 5 years after final entry or 5 years after date of document, as appropriate, in accordance with NIST guidelines.

SYSTEM MANAGER(S) AND ADDRESS:

Director of Human Resources, U.S. Railroad Retirement Board, 844 North Rush Street, Chicago, Illinois 60611–2092

Assistant to the Director of Administration, U.S. Railroad Retirement Board, 844 North Rush Street, Chicago, Illinois 60611–2092

NOTIFICATION PROCEDURE:

Requests for information regarding an individual's record(s) should be in writing to the System Manager(s) identified above, and must include the full name. Before information about any record will be released, the System Manager(s) may require the individual to provide proof of identity or require the requestor to furnish an authorization from the individual to permit release of information.

RECORD ACCESS PROCEDURE:

See Notification section above.

CONTESTING RECORD PROCEDURE:

See Notification section above.

RECORD SOURCE CATEGORIES:

Individuals to whom building passes are issued.

EXEMPTIONS CLAIMED FOR THE SYSTEM:

None.

* * * * *

RRB–49

SYSTEM NAME:

Telephone Call Detail Records

SYSTEM LOCATION:

U.S. Railroad Retirement Board, 844 North Rush Street, Chicago, Illinois 60611–2092.

SECURITY CLASSIFICATION:

None.

CATEGORIES OF INDIVIDUALS COVERED BY THE SYSTEM:

Individuals (generally agency employees and contractor personnel) who make or receive telephone calls from agency owned telephones at the agency's 844 North Rush Street headquarters building.

CATEGORIES OF RECORDS IN THE SYSTEM:

Name of employee, telephone number, location of telephone, date and time phone call made or received, duration of call, telephone number called from agency telephone, city and state of telephone number called, cost of call made on agency phone.

AUTHORITY FOR MAINTENANCE OF THE SYSTEM:

31 U.S.C. 1348(b)

PURPOSE(S):

The purpose of this system of records are to verify the correctness of telephone service billing and to detect and deter possible improper use of agency telephones by agency employees and contractors.

ROUTINE USES OF RECORDS MAINTAINED IN THE SYSTEM, INCLUDING CATEGORIES OF USERS, AND THE PURPOSES OF SUCH USES:

a. Relevant records may be released to a telecommunications company providing support to permit servicing the account.

b. Relevant records may be disclosed to representatives of the General Services Administration or the National Archives and Records Administration who are conducting records management inspections under the authority of 44 U.S.C. 2904 and 2906.

c. Records may be disclosed in response to a request for discovery or for the appearance of a witness, to the extent that what is disclosed is relevant to the subject matter involved in a pending judicial or administrative proceeding.

d. Records may be disclosed in a proceeding before a court or adjudicative body to the extent that they are relevant and necessary to the proceeding.

e. Relevant records may be disclosed to respond to a Federal agency's request made in connection with the hiring or retention of an employee, the letting of a contract or issuance of a grant, license or other benefit by the requesting agency, but only to the extent that the information disclosed is relevant and necessary to the requesting agency's decision on the matter.

DISCLOSURE TO CONSUMER REPORTING AGENCIES:

None.

POLICIES AND PRACTICES FOR STORING, RETRIEVING, ACCESSING, RETAINING, AND DISPOSING OF RECORDS IN THE SYSTEM:

STORAGE:

Paper and Magnetic disk.

RETRIEVABILITY:

Name, telephone extension, number dialed.

SAFEGUARDS:

Paper: Maintained in areas not accessible to the public in metal filing cabinets. Access is limited to authorized RRB employees. Offices are locked during non-business hours. Building has 24 hour on-site security officers, closed circuit television monitoring and intrusion detection systems.

Magnetic disk: Computer and computer storage rooms are restricted to authorized personnel; on-line query safeguards include a lock/unlock password system, a terminal oriented transaction matrix, role based access controls and audit trail. System securities are established in accordance with National Institute of Standards and Technology (NIST) guidelines, including network monitoring, defenses in-depth, incident response and forensics.

RETENTION AND DISPOSAL:

Paper. Reports, when issued, are disposed of as provided in National Archives and Records Administration General Records Schedule 12—Destroy when 3 years old. Initial reports may be destroyed earlier if the information needed to identify abuse has been captured in other records.

Magnetic disk: Maintained for approximately 180 days and then overwritten, following NIST guidelines. When magnetic disk or other electronic media is no longer required or servicable, it is sanitized in accordance with NIST guidelines.

SYSTEM MANAGER(S) AND ADDRESS:

Director of Administration, U.S. Railroad Retirement Board, 844 North Rush Street, Chicago, Illinois 60611–2092.

NOTIFICATION PROCEDURE:

Requests for information regarding an individual's record should be in writing addressed to the Systems Manager identified above, including the full name.

RECORD ACCESS PROCEDURE:

See Notification section above.

CONTESTING RECORD PROCEDURE:

See Notification section above.

RECORD SOURCE CATEGORIES:

Telephone assignment records; computer software that captures telephone call information and permits query and reports generation.

EXEMPTIONS CLAIMED FOR THE SYSTEM:

None.

* * * * *

RRB–50

SYSTEM NAME:

Child Care Tuition Assistance Program.

SYSTEM LOCATION:

U.S. Railroad Retirement Board, 844 North Rush Street, Chicago, Illinois 60611–2092.

SECURITY CLASSIFICATION:

None.

CATEGORIES OF INDIVIDUALS COVERED BY THE SYSTEM:

Current and former Railroad Retirement Board employees who voluntarily applied for child care tuition assistance, the employee's spouse, the employee's children and their child care providers.

CATEGORIES OF RECORDS IN THE SYSTEM:

Employee (parent) name, Social Security number, pay grade, home and work numbers, addresses, total family income, spouse employment information, names of children on whose behalf the employee parent is applying for tuition assistance, each applicable child's date of birth, information on child care providers used (including name, address, provider license number and state where issued, tuition cost, and provided tax identification number), and copies of IRS Form 1040 and 1040A for verification purposes. Other records may include the child's Social Security number, weekly expense, pay statements, records relating to direct deposits, verification of qualification and administration for child care assistance.

AUTHORITY FOR MAINTENANCE OF THE SYSTEM:

Pub. L. 107–67, section 630 and E.O. 9397.

PURPOSE(S):

The purpose of the system is to determine eligibility for, and the amount of, the child care tuition assistance for lower income RRB employees.

ROUTINE USES OF RECORDS MAINTAINED IN THE SYSTEM, INCLUDING CATEGORIES OF USERS, AND THE PURPOSES OF SUCH USES:

a. Records may be disclosed in response to a request for discovery or for the appearance or a witness, to the extent that what is disclosed is relevant to the subject matter involved in a pending judicial or administrative proceeding.

b. Records may be disclosed in a proceeding before a court or adjudicative body to the extent that they are relevant and necessary to the proceeding.

c. Relevant records may be disclosed to respond to a Federal agency's request made in connection with the hiring or retention of an employee, the letting of a contract or issuance of a grant, license or other benefit by the requesting agency, but only to the extent that the information disclosed is relevant and necessary to the requesting agency's decision on the matter.

d. Relevant records may be disclosed to the Office of Personnel Management or the General Accountability Office when the information is required for evaluation of the subsidy program.

e. Relevant records may be disclosed to child care providers to verify a covered child's dates of attendance at the provider's facility.

DISCLOSURE TO CONSUMER REPORTING AGENCIES:

None.

POLICIES AND PRACTICES FOR STORING, RETRIEVING, ACCESSING, RETAINING, AND DISPOSING OF RECORDS IN THE SYSTEM:

STORAGE:

Paper, Magnetic tape and Magnetic disk.

RETRIEVABILITY:

Name, Social Security number.

SAFEGUARDS:

Paper: Maintained in areas not accessible to the public in locking filing cabinets until shipment to the Federal facility that is responsible for the Federal Employees Education and Assistance Fund (FEEA). Access is limited to authorized Federal employees. Offices are locked during non-business hours. Building has 24 hour on-site security officers, closed circuit television monitoring and intrusion detection systems.

Magnetic tape and magnetic disk: Computer and computer storage rooms are restricted to authorized personnel; on-line query safeguards include a lock/unlock password system, a terminal oriented transaction matrix, role based access controls and audit trail. For electronic records, system securities are established in accordance with National Institute of Standards and Technology (NIST) guidelines, including network monitoring, defenses in-depth, incident response and forensics. In addition to the on-line query safeguards, they include encryption of all data transmitted and exclusive use of leased telephone lines.

RETENTION AND DISPOSAL:

These records will be maintained permanently at FEEA until their official retention period is established by the National Archives and Records Administration (NARA).

SYSTEM MANAGER(S) AND ADDRESS:

Director of Human Resources, U.S. Railroad Retirement Board, 844 North Rush Street, Chicago, Illinois 60611–2092.

NOTIFICATION PROCEDURE:

Requests for information regarding an individual's record should be in writing addressed to the Systems Manager identified above, including the full name and Social Security number of the individual. Before information about any record will be released, the System Manager may require the individual to provide proof of identity or require the requester to furnish an authorization from the individual to permit release of information.

RECORD ACCESS PROCEDURE:

See Notification section above.

CONTESTING RECORD PROCEDURE:

See Notification section above.

RECORD SOURCE CATEGORIES:

Applications for child care tuition assistance submitted voluntarily by RRB employees; forms completed by child care providers.

EXEMPTIONS CLAIMED FOR THE SYSTEM:

None.

* * * * *

RRB–51

SYSTEM NAME:

Railroad Retirement Board's Customer PIN/Password (PPW) Master File System.

SYSTEM LOCATION:

U.S. Railroad Retirement Board, 844 North Rush Street, Chicago, Illinois 60611–2092.

SECURITY CLASSIFICATION:

None.

CATEGORIES OF INDIVIDUALS COVERED BY THE SYSTEM:

All RRB customers (applicants, claimants, annuitants and other customers) who elect to conduct transactions with RRB in an electronic business environment that requires the PPW infrastructure, as well as those customers who elect to block PPW access to RRB electronic transactions by requesting RRB to disable their PPW capabilities.

CATEGORIES OF RECORDS IN THE SYSTEM:

The information includes identifying information such as the customer's name, Social Security number, personal identification number (PIN)) and mailing address. The system also maintains the customer's Password Request Code (PRC), the password itself, and the authorization level and associated data (e.g. effective date of authorization).

AUTHORITY FOR MAINTENANCE OF THE SYSTEM:

Sec. 2(b)(6) of the Railroad Retirement Act, 45 U.S.C. 231f(b)(6); and the Government Paperwork Elimination Act.

PURPOSE(S):

The purpose of this system is to enable RRB customers who wish to conduct business with the RRB to do so in a secure environment.

ROUTINE USES OF RECORDS MAINTAINED IN THE SYSTEM, INCLUDING CATEGORIES OF USERS, AND THE PURPOSES OF SUCH USES:

a. Records may be disclosed in response to a request for discovery or for the appearance of a witness, to the extent that what is disclosed is relevant to the subject matter involved in a pending judicial or administrative proceeding and provided that the disclosure would be clearly in the furtherance of the interest of the subject individual.

b. Records may be disclosed in a proceeding before a court or adjudicative body to the extent that they are relevant and necessary to the proceeding and provided that the disclosure would be clearly in the furtherance of the interest of the subject individual.

DISCLOSURE TO CONSUMER REPORTING AGENCIES:

None.

POLICIES AND PRACTICES FOR STORING, RETRIEVING, ACCESSING, RETAINING, AND DISPOSING OF RECORDS IN THE SYSTEM:

STORAGE:

Paper, Magnetic tape and Magnetic disk.

RETRIEVABILITY:

Name and Social Security number.

SAFEGUARDS:

Paper: Maintained in areas not accessible to the public in metal filing cabinets. Access is limited to authorized RRB employees. Offices are locked during non-business hours. Building has 24 hour on-site security officers, closed circuit television monitoring and intrusion detection systems.

Magnetic tape and magnetic disk: Computer and computer storage rooms are restricted to authorized personnel; on-line query safeguards include a lock/unlock password system, a terminal oriented transaction matrix, role based access controls and audit trail. For electronic records, system securities are established in accordance with National Institute of Standards and Technology (NIST) guidelines, including network monitoring, defenses in-depth, incident response and forensics. In addition to the on-line query safeguards, they include encryption of all data transmitted and exclusive use of leased telephone lines.

RETENTION AND DISPOSAL:

These records will be maintained permanently until their official retention period is established by the National Archives and Records Administration (NARA).

SYSTEM MANAGER(S) AND ADDRESS:

Office of Programs—Director of Policy and Systems, U.S. Railroad Retirement Board, 844 North Rush Street, Chicago, Illinois 60611–2092.

NOTIFICATION PROCEDURE:

Requests for information regarding an individual's record should be in writing addressed to the Systems Manager identified above, including the full name and Social Security number of the individual. Before information about any record will be released, the System Manager may require the individual to provide proof of identity or require the requester to furnish an authorization from the individual to permit release of information.

RECORD ACCESS PROCEDURE:

See Notification section above.

CONTESTING RECORD PROCEDURE:

See Notification section above.

RECORD SOURCE CATEGORIES:

Data for the system are obtained primarily from the individuals to whom the record pertains.

EXEMPTIONS CLAIMED FOR THE SYSTEM:

None.

* * * * *

RRB–52

SYSTEM NAME:

Board Orders Concerning Benefit Appeals to the Three-member Board.

SYSTEM LOCATION:

U.S. Railroad Retirement Board, 844 North Rush Street, Chicago, Illinois 60611–2092.

SECURITY CLASSIFICATION:

None.

CATEGORIES OF INDIVIDUALS COVERED BY THE SYSTEM:

Appellants for benefits under the Railroad Retirement or Railroad Unemployment Insurance Acts.

CATEGORIES OF RECORDS IN THE SYSTEM:

Appellant name, Social Security number, railroad retirement board claim number, address, date of birth, sex, medical records, marriage or relationship records, military service, creditable earnings and service months, benefit payment history, work history, citizenship and legal residency status, correspondence and inquiries, and appeals of adverse determinations.

AUTHORITY FOR MAINTENANCE OF THE SYSTEM:

Section 7(b)(6) of the Railroad Retirement Act of 1974 (45 U.S.C. 231f(b)(6); sec. 12(l) of the Railroad Unemployment Insurance Act (45 U.S.C. 362(l)).

PURPOSE(S):

Record decisions of The Board in benefit appeals cases.

ROUTINE USES OF RECORDS MAINTAINED IN THE SYSTEM, INCLUDING CATEGORIES OF USERS, AND THE PURPOSES OF SUCH USES:

a. If a request for information pertaining to an individual is made by an official of a labor organization of which the individual is a member and the request is made on behalf of the individual, information from the record of the individual concerning his benefit or anticipated benefit and concerning the method of calculating that benefit may be disclosed to the labor organization official.

b. Records may be disclosed in a court proceeding relating to any claims for benefits by the beneficiary under the Railroad Retirement Act and may be disclosed during the course of an administrative appeal to individuals who need the records to prosecute or decide the appeal or to individuals who are requested to provide information relative to an issue involved in the appeal.

DISCLOSURE TO CONSUMER REPORTING AGENCIES:

None.

POLICIES AND PRACTICES FOR STORING, RETRIEVING, ACCESSING, RETAINING, AND DISPOSING OF RECORDS IN THE SYSTEM:

STORAGE:

Paper, Magnetic tape and Magnetic disk.

RETRIEVABILITY:

Name, railroad retirement claim number, Social Security account number, board order number, docket number.

SAFEGUARDS:

Paper: Maintained in areas not accessible to the public in metal filing cabinets. Access is limited to authorized RRB employees. Offices are locked during non-business hours. Building has 24 hour on-site security officers, closed circuit television monitoring and intrusion detection systems.

Magnetic tape and magnetic disk: Computer and computer storage rooms are restricted to authorized personnel; on-line query safeguards include a lock/unlock password system, a terminal oriented transaction matrix, role based access controls and audit trail. System securities are established in accordance with National Institute of Standards and Technology (NIST) guidelines, including network monitoring, defenses in-depth, incident response and forensics.

RETENTION AND DISPOSAL:

No records from this system will be disposed of pending a record schedule determination by the National Archives and Records Administration (NARA).

SYSTEM MANAGER(S) AND ADDRESS:

Secretary of the Board, U.S. Railroad Retirement Board, 844 N. Rush Street, Chicago, Illinois 60611–2092.

NOTIFICATION PROCEDURE:

Requests for information regarding an individual's record should be in writing addressed to the System Manager identified above, including the full name and Social Security number and claim number of the individual. Before information about any record will be released, the System Manager may require the individual to provide proof of identity or require the requester to furnish an authorization from the individual to permit release of information.

RECORD ACCESS PROCEDURE:

See Notification section.

CONTESTING RECORD PROCEDURE:

See Notification section.

RECORD SOURCE CATEGORIES:

Applications for benefits and appeal of decisions.

EXEMPTIONS CLAIMED FOR THE SYSTEM:

None.

* * * * *

RRB–53

SYSTEM NAME:

Employee Medical and Eye Examination Reimbursement Program

SYSTEM LOCATION:

U.S. Railroad Retirement Board, 844 N. Rush Street, Chicago, IL 60611–2092

SECURITY CLASSIFICATION:

None

CATEGORIES OF INDIVIDUALS COVERED BY THE SYSTEM:

Any RRB employees that request co-payment reimbursement for either eye or physical examinations.

CATEGORIES OF RECORDS IN THE SYSTEM:

RRB employee name and medical documentation including receipts for the physical exam co-pay and payment of the eye examination. Records prior to October 1, 2009 also contain the employee Social Security number.

AUTHORITY FOR MAINTENANCE OF THE SYSTEM:

Section 7(b)(6) of the Railroad Retirement Act of 1974 (45 U.S.C. 231f(b)(6)) and Section 12(l) of the Railroad Unemployment Insurance Act (45 U.S.C. 362(1)). Negotiated Labor Management Agreement between the U.S. Railroad Retirement Board and the Council of American Federation of Government Employees (AFGE), Locals in the Railroad Retirement Board.

PURPOSE(S):

To provide reimbursement for and maintain the records of the RRB's physical and eye examination program. For purposes of adjudicating the claim and approving reimbursement of co-payment fees related to RRB employee physical and eye examinations.

ROUTINE USES OF RECORDS MAINTAINED IN THE SYSTEM, INCLUDING CATEGORIES OF USERS, AND THE PURPOSES OF SUCH USES:

Internal RRB Use.

DISCLOSURE TO CONSUMER REPORTING AGENCIES:

None.

POLICIES AND PRACTICES FOR STORING, RETRIEVING, ACCESSING, RETAINING, AND DISPOSING OF RECORDS IN THE SYSTEM:

STORAGE:

Paper, Magnetic disk.

RETRIEVABILITY:

Full name. Social Security account number (for records prior to October 1, 2009).

SAFEGUARDS:

Paper: Maintained in areas not accessible to the public in metal filing cabinets. Access is limited to authorized RRB employees. Offices are locked during non-business hours. Building has 24 hour on-site security officers, closed circuit television monitoring and intrusion detection systems.

Magnetic disk: Computer and computer storage rooms are restricted to authorized personnel; on-line query safeguards include a lock/unlock password system, a terminal oriented transaction matrix, role based access controls and audit trail. System securities are established in accordance with National Institute of Standards and Technology (NIST) guidelines, including network monitoring, defenses in-depth, incident response and forensics.

RETENTION AND DISPOSAL:

These records will be maintained permanently until their official retention period is established by the National Archives and Records Administration (NARA).

SYSTEM MANAGER(S) AND ADDRESS:

Employee Health Services, U.S. Railroad Retirement Board, 844 N. Rush Street, Chicago, Illinois 60611–2092

NOTIFICATION PROCEDURE:

Requests for information regarding an individual's record should be in writing addressed to the System Manager identified above, including the full name of the individual. Before information about any record will be released, the System Manager may require the individual to provide proof of identity or require the requester to furnish an authorization from the individual to permit release of information.

RECORD ACCESS PROCEDURE:

See Notification section.

CONTESTING RECORD PROCEDURE:

See Notification section.

RECORD SOURCE CATEGORIES:

Employee reimbursement claim and proofs.

EXEMPTIONS CLAIMED FOR THE SYSTEM:

None.

* * * * *

RRB–54

SYSTEM NAME:

Virtual Private Network (VPN) Access Management.

SYSTEM LOCATION:

U.S. Railroad Retirement Board, 844 N. Rush Street, Chicago, Illinois 60611–2092.

SECURITY CLASSIFICATION:

None.

CATEGORIES OF INDIVIDUALS COVERED BY THE SYSTEM:

RRB and other federal employees and contractors who are authorized to remotely access internal RRB information systems.

CATEGORIES OF RECORDS IN THE SYSTEM:

Name, home telephone number, work telephone number, authentication information, group name, source IP address, remote computer name, home address, software serial numbers, access levels.

AUTHORITY FOR MAINTENANCE OF THE SYSTEM:

Section 7(b)(6) of the Railroad Retirement Act of 1974 (45 U.S.C.

231f(b)(6)) and Section 12(l) of the Railroad Unemployment Insurance Act (45 U.S.C. 362(l)).

PURPOSE(S):

Manage employee and contractor remote access to internal RRB information systems for official business.

ROUTINE USES OF RECORDS MAINTAINED IN THE SYSTEM, INCLUDING CATEGORIES OF USERS, AND THE PURPOSES OF SUCH USES:

a. Records may be disclosed to another Federal agency or to a court when the government is party to a judicial proceeding before the court.

b. Records may be disclosed to a Federal agency, on request, in connection with the hiring and/or retention of an employee.

c. Records may be disclosed to officials of the Merit Systems Protection Board, including the Office of Special Counsel; the Federal Labor Relations Authority and its General Counsel; or the Equal Employment Opportunity Commission when requested in the performance of their authorized duties.

d. Records may be disclosed to an authorized appeal or grievance examiner, formal complaints examiner, equal employment opportunity investigator, arbitrator, or other duly authorized official engaged in investigation or settlement of a grievance, complaint, or appeal filed by an employee to whom the information pertains.

e. Records may be disclosed to the agency's Office of Inspector General for any official investigation or review related to the programs and operations of the RRB.

f. Records may be disclosed to agency officials for any official investigation or review related to the programs and operations of the RRB.

DISCLOSURE TO CONSUMER REPORTING AGENCIES:

None.

POLICIES AND PRACTICES FOR STORING, RETRIEVING, ACCESSING, RETAINING, AND DISPOSING OF RECORDS IN THE SYSTEM:

STORAGE:

Paper, Magnetic tape and Magnetic disk.

RETRIEVABILITY:

Name, e-mail address.

SAFEGUARDS:

Paper: Maintained in areas not accessible to the public in metal filing cabinets. Access is limited to authorized RRB employees. Offices are locked during non-business hours. Building has 24 hour on-site security officers, closed circuit television monitoring and intrusion detection systems.

Magnetic tape and magnetic disk: Computer and computer storage rooms are restricted to authorized personnel; on-line query safeguards include a lock/unlock password system, a terminal oriented transaction matrix, role based access controls and audit trail. For electronic records, system securities are established in accordance with National Institute of Standards and Technology (NIST) guidelines, including network monitoring, defenses in-depth, incident response and forensics. In addition to the on-line query safeguards, they include encryption of all data transmitted and exclusive use of leased telephone lines.

RETENTION AND DISPOSAL:

These records will be maintained permanently until their official retention period is established by the National Archives and Records Administration (NARA).

SYSTEM MANAGER(S) AND ADDRESS:

Chief of Infrastructure Services, U.S. Railroad Retirement Board, 844 N. Rush Street, Chicago, Illinois 60611–2092

NOTIFICATION PROCEDURE:

Requests for information regarding an individual's record should be in writing addressed to the System Manager identified above, including the full name and enrolled e-mail address of the individual. Before information about any record will be released, the System Manager may require the individual to provide proof of identity or require the requester to furnish an authorization from the individual to permit release of information.

RECORD ACCESS PROCEDURE:

See Notification procedure above.

CONTESTING RECORD PROCEDURE:

See Notification procedure above.

RECORD SOURCE CATEGORIES:

VPN access application Form G–68, and infrastructure profiles.

EXEMPTIONS CLAIMED FOR THE SYSTEM:

None.

* * * * *

RRB–55

SYSTEM NAME:

Contact Log.

SYSTEM LOCATION:

U.S. Railroad Retirement Board, 844 North Rush Street, Chicago, Illinois 60611–2092.

SECURITY CLASSIFICATION:

None.

CATEGORIES OF INDIVIDUALS COVERED BY THE SYSTEM:

Annuitants, their representatives and other recipients of railroad retirement, survivor, disability, Medicare and supplemental annuities payable under the Railroad Retirement Act (RRA) and individuals receiving or applying for unemployment or sickness insurance benefits payable under the Railroad Unemployment Insurance Act (RUIA).

CATEGORIES OF RECORDS IN THE SYSTEM:

The Railroad Retirement Board (RRB) claim number, Social Security number of the annuitant/claimant, annuitant's name, contact name (if different from the annuitant), telephone number of the contact, name and office code of the RRB employee who submitted the contact, and the entered contact record.

AUTHORITY FOR MAINTENANCE OF THE SYSTEM:

Section 7(b)(6) of the Railroad Retirement Act (RRA) of 1974 (45 U.S.C. 231f(b)(6); and Section 12(l) of the Railroad Unemployment Insurance Act (RUIA) (45 U.S.C. 362(1))

PURPOSE(S):

The Contact Log is used to benefit program-related contacts with the RRB by members of the public.

ROUTINE USES OF RECORDS MAINTAINED IN THE SYSTEM, INCLUDING CATEGORIES OF USERS, AND THE PURPOSES OF SUCH USES:

a. Disclosure of information concerning the annuitant/claimant may be made to the representative payee on the record for the annuitant.

b. Beneficiary identifying information may be disclosed to third party contacts to determine whether the beneficiary or potential beneficiary is capable of understanding and managing their benefit payments in their own best interest and to determine the suitability of a proposed representative payee.

c. Records may be disclosed in response to a request for discovery or for the appearance of a witness, to the extent that what is disclosed is relevant to the subject matter involved in a pending judicial or administrative proceeding and provided that the disclosure would be clearly in the furtherance of the interest of the subject individual.

d. Records may be disclosed in a proceeding before a court or adjudicative body to the extent that they are relevant and necessary to the proceeding and provided that the disclosure would be clearly in the furtherance of the interest of the subject individual.

e. Disclosure of records concerning the annuitant/claimant may be made to the attorney representing the annuitant/

claimant, upon receipt of a written letter or declaration of representation.

f. Records may be disclosed to the annuitant/claimant's railroad union representative(s) to the extent that what is disclosed is relevant to the subject matter involved in the union issue or proceeding and provided that the disclosure would be clearly in the furtherance of the interest of the subject individual.

DISCLOSURE TO CONSUMER REPORTING AGENCIES:

None.

POLICIES AND PRACTICES FOR STORING, RETRIEVING, ACCESSING, RETAINING, AND DISPOSING OF RECORDS IN THE SYSTEM:

STORAGE:

Magnetic tape and Magnetic disk.

RETRIEVABILITY:

RRB claim number or Social Security account number.

SAFEGUARDS:

Computer and computer storage rooms are restricted to authorized personnel; on-line query safeguards include a lock/unlock password system, a terminal oriented transaction matrix, role based access controls and audit trail. For electronic records, system securities are established in accordance with National Institute of Standards and Technology (NIST) guidelines, including network monitoring, defenses in-depth, incident response and forensics. In addition to the on-line query safeguards, they include encryption of all data transmitted and exclusive use of leased telephone lines.

RETENTION AND DISPOSAL:

These records will be maintained permanently until their official retention period is established by the National Archives and Records Administration (NARA).

SYSTEM MANAGER(S) AND ADDRESS:

Office of Programs—Director of Policy and Systems, U.S. Railroad Retirement Board, 844 North Rush Street, Chicago, Illinois 60611–2092.

NOTIFICATION PROCEDURE:

Request for information regarding an individual's record should be in writing addressed to the System Manager identified above, including the full name and Social Security number. Before information about any record is released, the System Manager will require the individual to provide proof of identity or require the requester to furnish an authorization from the individual to permit release of information.

RECORD ACCESS PROCEDURE:

See Notification section above.

CONTESTING RECORD PROCEDURE:

See Notification section above.

RECORD SOURCE CATEGORIES:

Contact Log information is obtained from members of the public who contacted the RRB and to whom the record pertains.

EXEMPTIONS CLAIMED FOR THE SYSTEM:

None.

* * * * *

RRB–56

SYSTEM NAME:

Employee Service and Railroad Employer Coverage Determination Files.

SYSTEM LOCATION:

U.S. Railroad Retirement Board, 844 N. Rush Street, Chicago, Illinois 60611–2092

SECURITY CLASSIFICATION:

None.

CATEGORIES OF INDIVIDUALS COVERED BY THE SYSTEM:

Railroad employees; individuals claiming railroad service; entities being considered as covered employers.

CATEGORIES OF RECORDS IN THE SYSTEM:

Individuals: Name, address, Social Security number, employment history.

Employers: Name, Bureau of Accounts (B.A.) number, incorporation date, corporate structure, number of employees, services provided.

AUTHORITY FOR MAINTENANCE OF THE SYSTEM:

Section 7(b)(6) of the Railroad Retirement Act of 1974 (45 U.S.C. 231f(b)(6)); section 12(l) of the Railroad Retirement Unemployment Insurance Act (45 U.S.C. 362(l)); 20 CFR 259.

PURPOSE(S):

Records in this system or records are maintained to (1) record Board decisions as to who is an eligible employee of a covered entity for the purposes of benefits entitlement and (2) to record determinations as to who is an employer under the Railroad Retirement Act, for the purpose of a) crediting compensation and service months to employees for the purpose of benefits entitlement and b) assessment of appropriate taxes.

ROUTINE USES OF RECORDS MAINTAINED IN THE SYSTEM, INCLUDING CATEGORIES OF USERS, AND THE PURPOSES OF SUCH USES:

a. Identifying information such as full name, address, date of birth, Social Security number, employee identification number, and date last worked, may be released to any current or former employer to verify entitlement for benefits under the Railroad Retirement Act.

b. Certain identifying information about annuitants, such as name, Social Security number, RRB claim number, as well as address, year and month last worked for a railroad, last railroad occupation, identity of last railroad employer, and total months of railroad service may be furnished to railroad employers for purpose of determining whether annuitant has performed employee service for that employer, and therefore is entitled to benefits under the Railroad Retirement Act.

c. Certain information about annuitants such as year and month last worked for a railroad, the name(s) of railroad employer(s) the annuitant worked for, last railroad occupation, and total months of railroad service may be furnished to bonafide genealogical requests.

d. Board determinations regarding employer status are furnished to the Internal Revenue Service (IRS) as the administrator of the Railroad Retirement Tax Act (RRTA).

DISCLOSURE TO CONSUMER REPORTING AGENCIES:

None.

POLICIES AND PRACTICES FOR STORING, RETRIEVING, ACCESSING, RETAINING, AND DISPOSING OF RECORDS IN THE SYSTEM:

STORAGE:

Paper, Magnetic tape and Magnetic disk.

RETRIEVABILITY:

Name, e-mail address.

SAFEGUARDS:

Paper: Maintained in areas not accessible to the public in metal filing cabinets. Access is limited to authorized RRB employees. Offices are locked during non-business hours. Building has 24 hour on-site security officers, closed circuit television monitoring and intrusion detection systems.

Magnetic tape and magnetic disk: Computer and computer storage rooms are restricted to authorized personnel; on-line query safeguards include a lock/unlock password system, a terminal oriented transaction matrix, role based access controls and audit trail. For electronic records, system securities are established in accordance with National Institute of Standards and Technology (NIST) guidelines, including network monitoring, defenses in-depth, incident response and forensics. In addition to the on-line query safeguards, they

include encryption of all data transmitted and exclusive use of leased telephone lines.

RETENTION AND DISPOSAL:

Paper: For employee service records: Maintained for 90 days after imaging is completed, then destroyed. For employer coverage records: Maintained for 10 years after coverage is terminated, then destroyed in accordance with NIST guidelines.

Magnetic tape: Magnetic tape records are used to daily update the disk file, are retained for 90 days and then written over following NIST guidelines. For disaster recovery purposes certain tapes are stored 12–18 months.

Magnetic disk: Continually updated and permanently retained. When magnetic disk or other electronic media is no longer servicable, it is sanitized in accordance with NIST guidelines.

SYSTEM MANAGER(S) AND ADDRESS:

Office of the General Counsel, U.S. Railroad Retirement Board, 844 North Rush Street, Chicago, Illinois 60611–2092.

NOTIFICATION PROCEDURE:

Requests for information regarding an individual's records should be in writing, including the full name, Social Security number and railroad retirement claim number (if any) of the individual. Before information about any records will be released, the individual may be required to provide proof of identity, or authorization from the individual to permit release of information. Requests should be sent to the Office of the General Counsel, U.S. Railroad Retirement Board, 844 North Rush Street, Chicago, Illinois 60611–2092.

Requests for information regarding a railroad employer's records should be in writing, including the full corporate name, address, B.A. number (if any) of the company. Requests should be sent to the Office of the General Counsel, U.S. Railroad Retirement Board, 844 North Rush Street, Chicago, Illinois 60611–2092.

RECORD ACCESS PROCEDURE:

See Notification procedure above.

CONTESTING RECORD PROCEDURE:

See Notification procedure above.

RECORD SOURCE CATEGORIES:

Individual applicants or their representatives, railroad and other employers.

EXEMPTIONS CLAIMED FOR THE SYSTEM:

None.

* * * * *

RRB–57

SYSTEM NAME:

Employee Emergency Notification System.

SYSTEM LOCATION:

U.S. Railroad Retirement Board, 844 Rush Street, Chicago, Illinois 60611.

SECURITY CLASSIFICATION:

None.

CATEGORIES OF INDIVIDUALS COVERED BY THE SYSTEM:

RRB Employees and Contractors.

CATEGORIES OF RECORDS IN THE SYSTEM:

The emergency notification system will contain both public and personal contact information for RRB employees and contractors.

Public information stored in this system includes:

a. Employee name and organizational unit; Contractor name and organization.

Personal information stored in this system may include:

a. Work telephone, cellular, fax number(s) and e-mail address(es).

b. Identifying technical information for work issued Personal Digital Assistants (PDAs), cellular telephones, or other electronic devices, such as Serial Numbers, Electronic Serial Numbers, etc.

c. Home telephone, celluar number(s), personal e-mail address(es) and Zip code of residence.

AUTHORITY FOR MAINTENANCE OF THE SYSTEM:

a. 5 U.S.C. 301, Department Regulations.

b. Executive Order (EO) 12656, Assignment of emergency preparedness responsibilities, November 18, 1988.

c. Homeland Security Presidential Directive (HSPD)—20, National Continuity Policy, May 9, 2007.

PURPOSE(S):

The purpose of this system of records is to maintain emergency contact information for employees and select contractors of the U.S. Railroad Retirement Board (RRB). The system provides for multiple communication device notification via telephonic, fax, text and electronic mail message delivery to registered RRB personnel in response to threat alerts issued by the Department of Homeland Security, activation of the Continuity of Operations Plan (COOP), weather related emergencies or other critical situations that may disrupt the operations and accessibility of the agency. The system also provides for the receipt of real-time message acknowledgements and related management reports.

ROUTINE USES OF RECORDS MAINTAINED IN THE SYSTEM, INCLUDING CATEGORIES OF USERS, AND THE PURPOSES OF SUCH USES:

In addition to the conditions of disclosure listed in 5 U.S.C. 552a(b) of the Privacy Act and the RRB's Standard Disclosures, the RRB may release these records to any Federal government authority for the purpose of coordinating and reviewing agency continuity of operations plans or emergency contingency plans developed for responding to Department of Homeland Security threat alerts, weather related emergencies or other critical situations.

DISCLOSURE TO CONSUMER REPORTING AGENCIES:

None.

POLICIES AND PRACTICES FOR STORING, RETRIEVING, ACCESSING, RETAINING, AND DISPOSING OF RECORDS IN THE SYSTEM:

STORAGE:

Paper, magnetic tape, magnetic disk.

RETRIEVABILITY:

Name, Organizational Unit, Telephone, Fax or Cellular number, serial or electronic serial number or other unique identifier (work issued devices only), E-mail address, or Residence Zip Code.

SAFEGUARDS:

1. *Paper:* Maintained in areas not accessible to the public in metal filing cabinets at the RRB. Access is limited to authorized RRB employees. Records are stored in an office that has electronic access controlled doors. Building has 24 hour on-site security officers, closed circuit television monitoring and intrusion detection systems.

2. *Magnetic tape and disks:* Located at off-site commercial vendor data center. Computer and computer storage rooms are restricted to authorized personnel, have electronic access controlled doors. On-line query safeguards include a lock/unlock password system, a terminal oriented transaction matrix, role based access controls and audit trail. For electronic records, system securities are established in accordance with National Institute of Standards and Technology (NIST) guidelines, including network monitoring, defenses in-depth, incident response and forensics. In addition to the on-line query safeguards, they include encryption of data both at rest and in-transit.

RETENTION AND DISPOSAL:

1. *Emergency Contract Information.*

a. General. Records are maintained as long as the employee or contractor is working for or on the behalf of the RRB.

b. Paper Records. Destroy 90 days after the date entered into the system or after completion of the quality assurance process, whichever is later.

c. Electronic Records. Destroy within 90 days after the employee/contractor ceases employment/contract with the RRB.

2. *Operational Data.*

a. Actual messages, results and data. Cut off at end of fiscal year, destroyed at the end of the following fiscal year.

b. Test messages, results and data. Cut off at end of fiscal year, destroyed at the end of the following fiscal year.

3. *Reports.* Retained and disposal in accordance with National Archives and Records Administration (NARA), General Record Schedule (GRS), items 12 (Downloaded and derived data) and 16 (Hard copy print outs).

SYSTEM MANAGER(S) AND ADDRESS:

Office of Administration, U.S. Railroad Retirement Board, 844 North Rush Street, Chicago, Illinois, 60611–2092.

NOTIFICATION PROCEDURE:

Requests for information regarding an individual's record should be in writing addressed to the System Manager identified above, including the full name of the individual. Before information about any record will be released, the System Manager may require the individual to provide proof of identity or require the requester to furnish an authorization from the individual to permit release of information.

RECORD ACCESS PROCEDURE:

See Notification section above.

CONTESTING RECORD PROCEDURE:

See Notification section above.

RECORD SOURCE CATEGORIES:

RRB employees or supporting contractors.

EXEMPTIONS CLAIMED FOR THE SYSTEM:

No exemption is claimed for public information listed in this system of records.

Personal information listed in this system of records is exempted from disclosure to third parties under the Freedom of Information Act (FOIA) under the 5 U.S.C. 552a(b)(6), Personal Privacy rule. Additionally, personal information of law enforcement employees is protected from disclosure under 5 U.S.C. 552a(b)(7)C, Law Enforcement Records rule.

* * * * *

RRB–58

SYSTEM NAME:

Employee Tuition Assistance Program (TAP).

SYSTEM LOCATION:

U.S. Railroad Retirement Board, 844 Rush Street, Chicago, Illinois 60611.

SECURITY CLASSIFICATION:

None.

CATEGORIES OF INDIVIDUALS COVERED BY THE SYSTEM:

RRB Employees.

CATEGORIES OF RECORDS IN THE SYSTEM:

Employee name, grade, job title, business unit, course title, school name, class dates, number of hours per week, cost of tuition, estimated cost of textbooks/fees and claim tracking information (dates and amount paid).

AUTHORITY FOR MAINTENANCE OF THE SYSTEM:

a. 5 U.S.C. 4101 to 4118, Government Employees Training Act.

b. 5 CFR part 410, Office of Personnel Management-Training.

c. Executive Order 11348, Providing for the further training of Government employees, April 20, 1967.

d. Executive Order 12107, Relating to the Civil Service Commission and labor management in the Federal Service, January 1, 1979.

PURPOSE(S):

The purpose of this system of records is to maintain employee Tuition Assistance Program (TAP) training history, to forecast future training needs and for audit and budgetary records and projections.

ROUTINE USES OF RECORDS MAINTAINED IN THE SYSTEM, INCLUDING CATEGORIES OF USERS, AND THE PURPOSES OF SUCH USES:

In addition to the conditions of disclosure listed in 5 U.S.C. § 552a(b) of the Privacy Act and the RRB's Standard Disclosures, the RRB may release these records to:

a. Federal agencies for screening and selecting candidates for training or developmental programs sponsored by the agency.

b. Federal oversight agencies for investigating, reviewing, resolving, negotiating, settling, or hearing complaints, grievances, or other matters under their authority.

DISCLOSURE TO CONSUMER REPORTING AGENCIES:

None.

POLICIES AND PRACTICES FOR STORING, RETRIEVING, ACCESSING, RETAINING, AND DISPOSING OF RECORDS IN THE SYSTEM:

STORAGE:

Paper, magnetic tape, magnetic disk.

RETRIEVABILITY:

Employee name, grade, job title, business unit and claim tracking information (dates and amount paid).

SAFEGUARDS:

1. *Paper:* Maintained in areas not accessible to the public in metal filing cabinets at the RRB. Access is limited to authorized RRB employees. Records are stored in an office that has electronic access controlled doors. Building has 24 hour on-site security officers, closed circuit television monitoring and intrusion detection systems.

2. *Magnetic tape and disks:* Computer and computer storage rooms are restricted to authorized personnel, have electronic access controlled doors. On-line query safeguards include a lock/unlock password system, a terminal oriented transaction matrix, role based access controls and audit trail. For electronic records, system securities are established in accordance with National Institute of Standards and Technology (NIST) guidelines, including network monitoring, defenses in-depth, incident response and forensics.

RETENTION AND DISPOSAL:

Retained and disposal in accordance with National Archives and Records Administration (NARA), General Record Schedule, GRS–1, Item #29, Employee Training Records, Destroy when 5 years old or when superseded or obsolete, whichever is sooner.

SYSTEM MANAGER(S) AND ADDRESS:

Director of Human Resources, Office of Administration, U.S. Railroad Retirement Board, 844 North Rush Street, Chicago, Illinois 60611–2092.

NOTIFICATION PROCEDURE:

Requests for information regarding an individual's record should be in writing addressed to the System Manager identified above, including the full name of the individual. Before information about any record will be released, the System Manager may require the individual to provide proof of identity or require the requester to furnish an authorization from the individual to permit release of information.

RECORD ACCESS PROCEDURE:

See Notification section above.

CONTESTING RECORD PROCEDURE:

See Notification section above.

RECORD SOURCE CATEGORIES:

RRB employees.

EXEMPTIONS CLAIMED FOR THE SYSTEM:

None.

* * * * *

Appendix I

Offices of the U.S. Railroad Retirement Board (refer to *http://www.rrb.gov* for the most current addresses):

Headquarters: 844 North Rush Street, Chicago, Illinois 60611–2092 Office of Legislative Affairs: 1310 G Street, Northwest, Suite 500, Washington, DC 20005–3004

District Offices

Alabama

Medical Forum Bldg., 950 22nd Street North, Room 426, Birmingham, Alabama 35203–1134.

Arizona

Financial Plaza, 1201 South Alma School Road, Suite 4850, Mesa, Arizona 85210–2097.

Arkansas

1200 Cherry Brook Drive, Suite 500, Little Rock, Arkansas 72211–4122.

California

858 South Oak Park Road, Suite 102, Covina, California 91724–3674.

Oakland Federal Building, 1301 Clay Street, Suite 392N, Oakland, California 94612–5217.

801 I Street, Room 205, Sacramento, California 95814–2559.

Colorado

721 19th Street, Room 177, Post Office Box 8869, Denver, Colorado 80201–8869.

Florida

550 Water Street, Suite 220, Jacksonville, FL 32202–4411.

Georgia

Peachtree Summit Building, 401 West Peachtree Street, Room 1702, Atlanta, Georgia 30308–3519.

Illinois

844 North Rush Street, Room 901, Chicago, Illinois 60611–2092.

Millikin Court, 132 South Water Street, Suite 517, Decatur, Illinois 62523–1077.

63 West Jefferson Street, Suite 102, Joliet, Illinois 60434–0457.

Indiana

The Meridian Centre, 50 South Meridian Street, Suite 303, Indianapolis, Indiana 46204–3538.

Iowa

Federal Building, 210 Walnut Street, Room 921, Des Moines, Iowa 50309–2116.

Kansas

271 W. 3rd St. N., Ste. 4010, Wichita, KS 67202–1294.

Kentucky

Theatre Building, 629 South 4th Avenue, Suite 301, Post Office Box 3705, Louisville, Kentucky 40201–3705.

Louisiana

Hale Boggs Federal Building, 500 Poydras Street, Suite 1045, New Orleans, Louisiana 70130–3399.

Maryland

George H. Fallon Building, 31 Hopkins Plaza, Suite 820, Baltimore, Maryland 21201–2896.

Massachusetts

408 Atlantic Avenue, Room 441, Post Office Box 52126, Boston, Massachusetts 02205–2126.

Michigan

McNamara Federal Building, 477 Michigan Avenue, Room 1199, Detroit, Michigan 48226–2596.

Minnesota

Federal Building, 515 West First Street, Suite 125, Duluth, Minnesota 55802–1399.

180 East 5th Street, Suite 195, St. Paul, Minnesota 55101–1640.

Missouri

601 East 12th Street, Room 113, Kansas City, Missouri 64106–2808.

Young Federal Building, 1222 Spruce Street, Room 7.303, St. Louis, Missouri 63103–2846.

Montana

Judge Jameson Federal Building, 2900 Fourth Avenue North, Room 101, Billings, Montana 59101–1266.

Nebraska

Hruska U.S. Court House, 111 South 18 Plaza, Suite C125, Post Office Box 815, Omaha, Nebraska 68101–0815.

New Jersey

20 Washington Place, Room 516, Newark, NJ 07102–3127.

New Mexico

421 Gold Ave SW., Suite 304, PO Box 334, Albuquerque, NM 87103–0334.

New York

O'Brien Federal Building, Clinton Avenue & Pearl Street, Room 264, Post Office Box 529, Albany, New York 12201–0529.

186 Exchange Street, Suite 110, Buffalo, New York 14204–2085.

1400 Old Country Road, Suite 202, Westbury, New York 11590–5119.

Federal Building, 26 Federal Plaza, Suite 3404, New York, New York 10278–3499.

North Carolina

Quorum Business Park, 7508 East Independence Boulevard, Suite 120 Charlotte, North Carolina 28227–9409.

North Dakota

U.S. Post Office Building, 657 Second Avenue North, Room 312, Fargo, North Dakota 58102–4727.

Ohio

URS Building, 36 East 7th Street, Suite 201, Cincinnati, Ohio 45202–4456.

Celebrezze Federal Building, 1240 East 9th Street, Room 907, Cleveland, Ohio 44199–2001.

Oregon

Green-Wyatt Federal Building, 1220 Southwest 3rd Avenue, Room 377, Portland, Oregon 97204–2807.

Pennsylvania

1514 11th Avenue, Post Office Box 990, Altoona, Pennsylvania 16603–0990.

Federal Building, 228 Walnut Street, Room 576, Box 11697, Harrisburg, Pennsylvania 17108–1697.

Nix Federal Building, 900 Market Street, Suite 301, Post Office Box 327, Philadelphia, Pennsylvania 19105–0327.

Moorhead Federal Building, 1000 Liberty Avenue, Room 1511, Pittsburgh, Pennsylvania 15222–4107.

Siniawa Plaza II, 717 Scranton Carbondale Highway, Scranton, Pennsylvania 18508–1121.

Tennessee

233 Cumberland Bend, Suite 104, Nashville, Tennessee 37228–1806.

Texas

819 Taylor Street, Room 10G02, Post Office Box 17420, Fort Worth, Texas 76102–0420.

Leland Federal Building, 1919 Smith Street, Suite 845, Houston, Texas 77002–8098.

Utah

125 South State Street, Room 1205, Salt Lake City, Utah 84138–1137.

Virginia

400 North 8th Street, Suite 470, Richmond, Virginia 23219–4819.

First Campbell Square, 210 First Street Southwest, Suite 260, Post Office Box 270, Roanoke, VA, 24002–0270.

Washington

Pacific First Plaza, 155 108th Avenue, Northeast, Suite 201, Bellevue, Washington 98004–5901.

U.S. Court House, W 920 Riverside Avenue, Room 492B, Spokane, Washington 99201–1008.

West Virginia

New Federal Building, 640 4th Avenue, Room 145, Post Office Box 2153, Huntington, West Virginia 25721–2153.

Wisconsin

Reuss Plaza, 310 West Wisconsin Avenue, Suite 1300, Milwaukee, Wisconsin 53203–221.

[FR Doc. 2010–17934 Filed 7–23–10; 8:45 am]

BILLING CODE 7905–01–P



Federal Register

Monday,
July 26, 2010

Part IV

Architectural and Transportation Barriers Compliance Board

36 CFR Parts 1192
Americans With Disabilities Act (ADA) Accessibility Guidelines for Transportation Vehicles; Proposed Rule

ARCHITECTURAL AND TRANSPORTATION BARRIERS COMPLIANCE BOARD

36 CFR Part 1192

[Docket No. ATBCB 2010–0004]

RIN 3014–AA38

Americans With Disabilities Act (ADA) Accessibility Guidelines for Transportation Vehicles

AGENCY: Architectural and Transportation Barriers Compliance Board.

ACTION: Notice of proposed rulemaking.

SUMMARY: The Architectural and Transportation Barriers Compliance Board (Access Board) is proposing to revise and update its accessibility guidelines for buses, over-the-road buses, and vans. The guidelines ensure that transportation vehicles are readily accessible to and usable by individuals with disabilities. The guidelines apply to the acquisition of new, used, and remanufactured transportation vehicles, and the remanufacture of existing transportation vehicles to the extent required by regulations issued by the Department of Transportation pursuant to the Americans with Disabilities Act. The guidelines for transportation vehicles operated in fixed guideway systems (*e.g.,* rapid rail, light rail, commuter rail, and intercity rail) will be revised and updated at a future date.

DATES: Comments must be received by November 23, 2010.

ADDRESSES: You may submit comments, identified by docket number ATBCB 2010–0004 or RIN number 3014–AA38, by any of the following methods:

- *Federal eRulemaking Portal: http://www.regulations.gov.* Follow the instructions for submitting comments.
- *E-mail: pecht@access-board.gov.* Include docket number ATBCB 2010–0004 or RIN number 3014–AA38 in the subject line of the message.
- *Fax:* 202–272–0081.
- *Mail or Hand Delivery/Courier:* Office of Technical and Informational Services, Access Board, 1331 F Street, NW., suite 1000, Washington, DC 20004–1111.

All comments received will be posted without change to *http://www.regulations.gov*, including any personal information provided.

FOR FURTHER INFORMATION CONTACT: Jim Pecht, Architectural and Transportation Barriers Compliance Board, 1331 F Street, NW., suite 1000, Washington, DC 20004–1111. Telephone (202) 272–0021. E-mail *pecht@access-board.gov.*

SUPPLEMENTARY INFORMATION:

Background

Americans With Disabilities Act

The Americans with Disabilities Act (ADA) prohibits discrimination on the basis of disability in the provision of transportation services by public and private entities. 42 U.S.C. 12101 *et seq.* The ADA sets out different responsibilities for the Architectural and Transportation Barriers Compliance Board (Access Board) and the Department of Transportation with respect to implementing the statute.

The ADA requires the Access Board to issue guidelines for transportation vehicles that are readily accessible to and usable by individuals with disabilities. 42 U.S.C. 12204. These guidelines, by themselves, are not legally enforceable and do not require existing transportation vehicles to be retrofitted.[1]

The ADA requires the Department of Transportation to issue regulations that specify:

- Which public and private entities must comply with the transportation provisions of the ADA;
- When transportation vehicles acquired or remanufactured (*i.e.,* structurally restored and new or rebuilt major components installed to extend the vehicle's service life) by the public or private entities must be accessible; and
- What accessibility standards the transportation vehicles must meet. 42 U.S.C. 12149, 12164, and 12186(a).

The ADA requires the accessibility standards for transportation vehicles included in the Department of Transportation's regulations to be consistent with the guidelines issued by the Access Board. 42 U.S.C. 12149, 12163, 12186(c). The Department of Transportation's regulations are legally enforceable.

Prior Rulemaking

The Access Board issued accessibility guidelines for transportation vehicles in 1991 and amended the guidelines in 1998 to include additional requirements for over-the-road buses (i.e., buses characterized by an elevated passenger deck located over a baggage compartment). 56 FR 45530, September 6, 1991; 63 FR 51694, September 28, 1998. The Access Board's transportation vehicle guidelines are codified at 36 CFR part 1192.

The Department of Transportation issued regulations to implement the transportation provisions of the ADA in 1991. 56 FR 45621 and 45756, September 6, 1991. The Department of Transportation's regulations are codified at 49 CFR parts 37 and 38. The Department of Transportation's regulations at 49 CFR part 37 specify in:

- Subpart B (§§ 37.21 to 37.37) which public and private entities must comply with the transportation provisions of the ADA;
- Subpart D (§§ 37.71 to 37.93) when transportation vehicles acquired or remanufactured by public entities must be accessible;
- Subpart E (§§ 37.101 to 37.109) when transportation vehicles acquired or remanufactured by private entities must be accessible; and
- Subpart H (§§ 37.181 to 37.197) when over-the-road buses acquired or remanufactured by private entities must be accessible.

The Department of Transportation's regulations at 49 CFR part 38 set out the accessibility standards that the transportation vehicles must meet. The accessibility standards in 49 CFR part 38 are consistent the Access Board's transportation vehicle guidelines in 36 CFR part 1192.

Proposed Rule

The Access Board is issuing this proposed rule to revise and update its accessibility guidelines for buses, over-the-road buses, and vans (hereinafter referred to as the "1991 guidelines"). The guidelines for transportation vehicles operated in fixed guideway systems (*e.g.,* rapid rail, light rail, commuter rail, and intercity rail) will be revised and updated at a future date.

The proposed rule addresses the following issues, which are further discussed later in the preamble:

- When the 1991 guidelines were issued, low floor ramped buses were relatively new and ramp slopes were based on what was feasible at the time. The 1991 guidelines permitted 1:4 maximum ramp slopes at bus stops without sidewalks. There are documented incidents of wheelchairs and their occupants tipping over backwards going up bus ramps with 1:4 slopes. Since the 1991 guidelines were issued, buses have been designed with lower floors and longer ramps that have less steep ramps. The proposed rule specifies 1:6 maximum slopes for ramps deployed to bus stops with sidewalks and to bus stops without sidewalks (referred to as the "roadway" in the proposed rule).

[1] The Americans with Disabilities Act requires barriers in existing transportation vehicles used by public accommodations for transporting individuals and by private entities to provide specified public transportation to be removed where readily achievable. 42 U.S.C.12182(b)(2)(A)(iv) and 12184(b)(2)(C). The Department of Justice and the Department of Transportation are responsible for issuing regulations implementing this requirement. 28 CFR 36.310 and 49 CFR 37.5(f).

• The 1991 guidelines require buses, over-the-road buses, and vans to provide "sufficient clearances" for passengers who use wheelchairs to reach the wheelchair spaces in the vehicles. Individuals with disabilities, transit operators, and vehicle manufacturers have requested guidance on what are "sufficient clearances." The proposed rule specifies minimum dimensions for circulation paths connecting doorways that provide accessible boarding and wheelchair spaces, and for wheelchairs to maneuver into and out of wheelchair spaces.

• Additional research has been conducted on wheelchair transportation safety since the 1991 guidelines were issued. The proposed rule reduces the design force for wheelchair securement systems on large vehicles with a gross vehicle weight rating of 30,000 pounds or more, and adds a requirement for a forward excursion barrier at rear facing wheelchair securement systems based on the research. The proposed rule also requests comments on other recommendations submitted by researchers and safety experts regarding wheelchair securement systems.

• Public transit agencies are increasingly deploying intelligent transportation system technologies on buses. These technologies enable automated stop and route announcements on buses. The proposed rule requires public transit agencies that operate 100 or more buses in annual maximum service in fixed route systems to provide automated stop and route announcements on newly acquired buses that are more than 22 feet in length and operate in fixed route systems.

• Bus rapid transit is a new type of service that did not exist when the 1991 guidelines were issued. Some bus rapid transit systems are designed with raised platforms to provide level boarding, and the vehicles which operate in these systems can have passenger doors on both sides of the vehicle. The proposed rule addresses how the requirements for accessible boarding, circulation paths, and doorways apply to vehicles which operate in bus rapid transit systems that provide level boarding.

The proposed rule also removes some requirements in the 1991 guidelines that are unnecessary, modifies other requirements, and adds a few new requirements. A side-by-side comparison of the proposed rule and the 1991 guidelines is available on the Access Board's Web site at *http://www.access-board.gov/transit/.* The side-by-side comparison shows what requirements are removed, modified, or new.

New Format and Organization

The 1991 guidelines for buses and vans are contained in subpart B of 36 CFR part 1192 (§§ 1192.21 to 1192.39) and for over-the-road buses are contained in subpart G of 36 CFR part 1192 (§§ 1192.151 to 1192.161).

The proposed rule uses a new format and organization that is based on the accessibility guidelines for buildings and facilities in 36 CFR part 1191. The new format sets forth the guidelines for buses, over-the-road buses, and vans in an appendix to 36 CFR part 1192. The appendix is organized into eight chapters:

• Chapter T1 contains general information, including definitions.

• Chapter T2 contains scoping requirements that specify what vehicle features are required to be accessible.

• Chapters T3 through T8 contain technical requirements that specify how to design the vehicle features so they are accessible.

When the guidelines for transportation vehicles operated in fixed guideway systems are revised and updated in the future, the scoping and technical requirements for those vehicles will be added to Chapters T2 through T8.

Each chapter is arranged logically, and contains numbered sections and sub-sections that address a single subject indicated by the heading or title of the section and subsection. Figures are provided after some sections or subsections to illustrate the requirement in the section or subsection. Non-mandatory advisory information is inserted in boxes after some sections or subsections and is clearly identified.

Most of the revisions in the proposed rule are editorial only, and restate current requirements in the 1991 guidelines in plain language that is clear and easy to understand. The side-by-side comparison of the proposed rule and the 1991 guidelines on the Access Board's Web site at *http://www.access-board.gov/transit* shows what revisions are editorial only.

Proposed Changes That Received Substantial Comment

The Access Board made available drafts of the proposed rule for public review and comment in April 2007 and November 2008. The drafts and comments on the drafts are available on the Access Board's Web site at: *http://www.access-board.gov/transit/.* Proposed changes that received substantial comment are discussed below. Sections of the proposed rule are referred to by number (*e.g.,* T201).

Ramp Slope

Current Requirements

When the 1991 guidelines were issued, low floor ramped buses were relatively new. The Access Board did not want to preclude the use of low floor ramped buses because of their efficiency and speed of boarding compared to high floor buses equipped with lifts. Consequently, the ramp slopes in the 1991 guidelines were based on what was feasible at the time. The 1991 guidelines specify a range of maximum slopes for ramps deployed to bus stops with sidewalks and to bus stops without sidewalks.[2] The maximum ramp slopes in the 1991 guidelines are shown in the table below and are expressed as the ratio of the rise (distance from bus stop surface to bus floor surface) to the run (usable length of the ramp).

1991 GUIDELINES

Height of vehicle floor above 6 inch curb*	Maximum ramp slope
Bus Stops with Sidewalks	
3 inches or less	1:4
6 inches or less but more than 3 inches	1:6
9 inches or less but more than 6 inches	1:8
more than 9 inches	1:12

[2] 36 CFR 1192.23(c)(5) and 1192.159(c)(5).

1991 GUIDELINES—Continued

Bus Stops without Sidewalks	
Height of vehicle floor above roadway	Maximum ramp slope
Any distance	1:4

*The 1991 guidelines assume a 6 inch curb at sidewalks.

The following example illustrates the application of the 1991 guidelines. A low floor bus with a 15-inch-high floor that can be lowered by the suspension system (“kneeled”) to 12 inches at bus stops would have to provide a ramp that is at least 48 inches long to meet the maximum slope requirements at both bus stops with sidewalks and bus stops without sidewalks. At bus stops with sidewalks, the ramp slope would be 1:8. At bus stops without sidewalks, the ramp slope would be 1:4, or twice as steep as at bus stops with sidewalks.

Proposed Rule

Since the 1991 guidelines were issued, buses have been designed with lower floors and longer ramps that have less steep ramps.[3] Research shows that short ramps with slopes steeper than 1:8 are difficult for individuals with disabilities to use.[4] There are documented incidents of wheelchairs and their occupants tipping over backwards going up bus ramps with 1:4 slopes. A study of adverse incident reports from one public transit agency shows that a large percent of the incidents involving passengers who use wheelchairs occur while using bus ramps.[5]

T303.8.1 simplifies the requirements for ramp slope by specifying a 1:6 maximum slope for ramps deployed to bus stops with sidewalks and to bus stops without sidewalks (referred to as the “roadway” in the proposed rule).

The following example illustrates the application of T303.8.1. A low floor bus with a 14-inch-high floor that can be lowered by the suspension system (“kneeled”) to 10 inches at bus stops would have to provide a ramp that is at least 60 inches long to meet the 1:6 maximum slope to the roadway. At bus stops with sidewalks, the ramp slope would be 1:15 (assuming a 6-inch curb).

Bus and ramp manufacturers who commented on the drafts of the proposed rule provided varied information on this proposed change. Some bus and ramp manufacturers stated that the proposed 1:6 maximum slope to the roadway is feasible. Other bus manufacturers stated that the proposed 1:6 maximum slope to the roadway would involve significant structural changes to buses, or may not be feasible for certain model buses.

Question 1: Bus and ramp manufacturers are requested to provide additional information on the feasibility of the proposed 1:6 maximum slope to the roadway. If significant structural changes to buses are involved, provide information on the lead time for making the changes; the costs associated with the changes; and how much the changes would add to the cost per bus. If it is not feasible or would be too costly for certain model buses to meet the proposed 1:6 maximum slope to the roadway, provide information on the vehicle’s design constraints; the vehicle’s floor height to the roadway at the doorway where the ramp is deployed (in the kneeled position where a “kneeling” feature is provided); and the usable length of the vehicle’s ramp when deployed to the roadway.

Question 2: Van and ramp manufacturers and converters are requested to provide information on the feasibility of the proposed 1:6 maximum slope to the roadway for vans equipped with ramps, and any additional costs that would be incurred as a result of the proposed 1:6 maximum slope to the roadway.

Question 3: If it is not feasible or would be too costly for certain model buses or vans to provide ramps with 1:6 maximum slopes to the roadway, what alternative solutions should the Access Board or the Department of Transportation consider? For example, on fixed route systems where some or all of the bus stops on a particular route do not have sidewalks should only buses or vans that provide ramps with 1:6 maximum slopes to the roadway or are equipped with lifts be permitted to operate on that route? This would prevent incidents of wheelchairs and their occupants tipping over on steep ramps. Do different considerations apply to demand responsive systems? For example, are drivers of buses and vans used in demand responsive systems more likely to provide boarding assistance to passengers who use wheelchairs when ramps are deployed to the roadway and have slopes steeper than 1:6? What solutions do transit operators currently implement when ramps are deployed to the roadway and have slopes steeper than 1:6?

Public transit agencies who commented on the drafts of the proposed rule expressed concern that longer ramps (*e.g.,* bi-fold ramps) will be more costly to maintain. Public transit agencies also expressed operational concerns about deploying longer ramps in urban environments with narrow sidewalks and streets.

Question 4: Ramp manufacturers and public transit agencies that provide longer ramps on their buses are requested to provide information on whether longer ramps are more costly to maintain. If longer ramps are more costly to maintain, provide data on the annual costs to maintain a longer ramp (*e.g.,* 60 inches) and a shorter ramp (*e.g.,* 48 inches).

Question 5: Public transit agencies and others are requested to provide information on possible solutions to operational concerns about deploying longer ramps in urban environments with narrow sidewalks and streets. For example, should a public transit agency that operates buses in urban environments where all the bus stops have sidewalks be permitted to provide a 1:8 maximum slope to the sidewalk (assuming a 6-inch curb), instead of a 1:6 maximum slope to the roadway? If a public transit agency operates buses in urban environments where all the bus stops have sidewalks, and in other environments where some or all of the bus stops do not have sidewalks, and the public transit agency assigns low

[3] The Transbus prototype for the low floor ramped bus had a 17-inch-high floor that kneeled to approximately 13 inches and a 48-inch-long ramp. Low floor ramped buses available today have floors that are 14 to 15 inches high and can kneel to as low as 10 inches, and ramps that are as long as 60 inches.

[4] Templer, J., “Provisions for Elderly and Handicapped Pedestrians, Vol. 3: The Development and Evaluation of Countermeasures,” Report No. FHWA–RD–79–3 Prepared for the Federal Highway Administration, Department of Transportation (May 1980), pp. 2–34.

[5] The transit agency reported 155 adverse incidents involving passengers who use wheelchairs during a six-year period from 2000 to 2005. In 49 of the incidents (42.6 percent), the passengers were going up or down bus ramps. In 29 of the incidents (25.7 percent), the wheelchairs tipped over on the bus ramps and/or the passenger fell. Frost K. & Bertocci, G., “Retrospective review of adverse incidents involving passengers seated in wheeled mobility devices while traveling in large accessible transit vehicles,” 32 Medical Engineering & Physics 230–236 (2010).

floor ramped buses with shorter ramps to the urban environments only, and assigns low floor ramped buses with longer ramps or lift equipped buses to the other environments, should the public transit agency be permitted to provide a 1:8 maximum slope to the sidewalk (assuming a 6-inch curb), instead of a 1:6 maximum slope to the roadway on the low floor ramped buses that are assigned to the urban environments only?

Question 6: Public transit agencies are requested to provide the following information to assist the Access Board evaluate the impacts of the ramp slope requirements in the 1991 guidelines and the proposed rule:

- The number and percentage of bus stops in fixed route systems that do not have sidewalks;
- The number of individuals who are paratransit eligible because they cannot use buses with steep ramps, the average cost per paratransit trip, and the average number of paratransit trips per passenger per week; and
- The number of adverse incident reports for the past five years (2005–2009) involving low floor ramped buses and passengers who use wheelchairs or scooters, and how many of the incidents occurred while using ramps.

Circulation Paths Connecting Doorways That Provide Accessible Boarding and Wheelchair Spaces

Current Requirements

The Department of Transportation regulations require transit operators to transport wheelchairs and scooters that are up to 30 inches wide and 48 inches long.[6] The 1991 guidelines require buses, over-the-road buses, and vans to provide "sufficient clearances" for passengers who use wheelchairs to reach the wheelchair spaces in the vehicles.[7] Individuals with disabilities, transit operators, and vehicle manufacturers have requested guidance on what are "sufficient clearances."

Proposed Rule

T502.2 requires circulation paths connecting doorways that provide accessible boarding and wheelchair spaces to be at least 34 inches wide. This dimension does not apply to doorways, which are addressed in T503. This dimension applies from the vehicle floor to a height 40 inches minimum above the vehicle floor. The circulation path width can be reduced to 30 inches at heights 40 inches minimum above the vehicle floor.[8]

Bus manufacturers who commented on the drafts of the proposed rule provided varied information on this proposed change. Some bus manufacturers stated that 34-inch-wide circulation paths are feasible. Other bus manufacturers stated that seats would have to be eliminated to provide 34-inch-wide circulation paths.

Question 7: Bus manufacturers and transit operators are requested to provide additional information on the feasibility of the proposed clear width for circulation paths connecting doorways that provide accessible boarding and wheelchair spaces. If the proposed clear width will result in a loss of seats compared to the current requirement for "sufficient clearances," provide information on the width of the circulation path currently provided on the vehicle to reach the wheelchair space(s), and the number of seats that would be lost due to the proposed clear width. Floor and seating plans showing current designs and how the designs would have to be modified to comply with the proposed rule would be helpful for the Access Board to further evaluate this issue. Information describing how the loss of seats would affect the transit operator's system would also be helpful.

Question 8: Van manufacturers and converters are requested to provide information on the feasibility of the proposed clear width for circulation paths connecting doorways that provide accessible boarding and wheelchair spaces. If the proposed clear width will result in modifications to vans compared to the current requirement for "sufficient clearances," provide information on what modifications would be needed and any costs associated with the modifications. Information describing how the modifications would affect the transit operator's system would also be helpful.

The proposed rule does not address maneuvering space at turns, particularly right angle turns at the front of the bus. Some commenters recommended that performance specifications, including test methods, be established for passengers who use wheelchairs to reach wheelchair spaces in buses, over-the-road buses, and vans. The Rehabilitation Engineering Research Center on Accessible Public Transportation is developing a computer-aided design tool for the accessible design of vehicle interiors that may be useful for this purpose.

Question 9: Comments are requested on whether performance specifications should be established for passengers who use wheelchairs to reach wheelchair spaces in buses, over-the-road buses, and vans, and approaches for establishing such performance specifications.

Wheelchair Space Maneuvering Clearances

Current Requirements

As explained above, the Department of Transportation regulations require transit operators to transport wheelchairs and scooters that are up to 30 inches wide and 48 inches long.[9] The 1991 guidelines require wheelchair spaces in buses, over-the-road buses, and vans to be at least 30 inches wide and 48 inches long.[10]

Wheelchair spaces in buses, over-the-road buses, and vans are typically confined on three sides by seats, side walls, or wheel wells. Passengers who use wheelchairs and scooters need additional clearances to maneuver into and out of confined wheelchair spaces. As explained above, the 1991 guidelines require buses, over-the-road buses, and vans buses to provide "sufficient clearances" for passengers who use wheelchairs to reach wheelchair spaces in the vehicles.[11] Individuals with disabilities, transit operators, and vehicle manufacturers have requested guidance on what are "sufficient clearances."

Proposed Rule

The drafts of the proposed rule considered basing wheelchair space maneuvering clearances in buses, over-the-road buses, and vans on the dimensions for maneuvering clearances in alcoves in the accessibility guidelines for buildings and facilities.[12] Transit operators and vehicle manufacturers commented that those dimensions

[6] 49 CFR 37.3 (definition of "wheelchair" and "common wheelchair") and 37.165(b).

[7] 36 CFR 1192.23(a) and 1192.159(a)(1).

The 1991 guidelines require large buses that are more than 22 feet and over-the-road buses to provide at least two wheelchair spaces; and small buses and vans that are 22 feet or less to provide at least one wheelchair space. *Id.* The wheelchair spaces are required to be located as near as practicable to doorways that provide accessible boarding, and to be identified by the International Symbol of Accessibility. 36 CFR 1192.23(d)(2), 1192.27(b), and 1192.159(d)(2). The proposed rule does not change these requirements.

[8] The overhead clearances for circulation paths specified in T502.2 are the same as in the 1991 guidelines. 36 CFR 1192.29(f) and 1192.153(d). The requirement in T502.3 that features such as stanchions and fare collection devices not interfere with the maneuvering of wheelchairs is the same as in the 1991 guidelines. 36 CFR 1192.23(a) and (e), and 1192.33.

[9] *See* note 6.

[10] 36 CFR 1192.23(d)(2) and 1192.159(d)(2).

[11] *See* note 7.

[12] The accessibility guidelines for buildings and facilities require 12 inches minimum maneuvering clearance for parallel approach into and out of an alcove, and 6 inches minimum maneuvering clearance for forward approach into and out of an alcove. 36 CFR part 1191, Appendix D, 305.7.

would result in the loss of a significant number of seats, and would involve significant structural changes to paratransit minivans that provide rear entry to wheelchair spaces. The proposed rule does not use the dimensions for maneuvering clearances in alcoves in the accessibility guidelines for buildings and facilities.

The proposed rule uses the following dimensions recommended by transit operators for wheelchair space maneuvering clearances in buses, over-the-road buses, and vans:

- T402.4.1 requires 1 inch minimum maneuvering clearance on the short side of wheelchair spaces entered from the front or rear [the total size of the wheelchair space and maneuvering clearance is 31 inches by 48 inches minimum]; and
- T402.4.2 requires 6 inches minimum maneuvering clearance on the long side of wheelchair spaces entered from the side [the total size of the wheelchair space and maneuvering clearance is 30 inches by 54 inches minimum].

The transit operators who recommended these dimensions stated that they will provide "sufficient clearances" for most wheelchairs and scooters to maneuver into and out of wheelchair spaces in buses, over-the-road buses, and vans, and will not result in a loss of seats or structural changes to paratransit minivans that provide rear entry to wheelchair spaces.

Fold-down seats are permitted to occupy the wheelchair space and maneuvering clearance provided the wheelchair space and maneuvering clearance are not obstructed when the seats are in the up position. Fold-down seats are permitted to occupy the maneuvering clearance when the wheelchair space is occupied. Figures are provided in T402.4.1 and T402.4.2 to illustrate the wheelchair space and maneuvering clearance, and use of fold-up seats.

Question 10: Individuals with disabilities are requested to comment on whether the proposed maneuvering clearances are sufficient for wheelchairs and scooters to maneuver into and out of wheelchair spaces in buses, over-the-road buses, and vans.

Question 11: Transit operators and vehicle manufacturers are requested to comment on whether the proposed maneuvering clearances and use of fold-down seats will result in a loss of seats compared to the current requirement for "sufficient clearances." If the proposed maneuvering clearances and use of fold-down seats will result in a loss of seats, provide information on the size of the clearances currently provided on the vehicle to maneuver into and out of the wheelchair space(s), and the number of seats that would be lost due to the proposed maneuvering clearances. Floor and seating plans showing current designs and how the designs would have to be modified to comply with the proposed rule would be helpful for the Access Board to further evaluate this issue. Information describing how the loss of seats would affect the transit operator's system would also be helpful.

Question 12: Manufacturers and operators of paratransit minivans are requested to provide information on the feasibility of providing additional maneuvering clearance (beyond 1 inch) for rear entry to a wheelchair space without making significant structural changes to the vehicles.

Wheelchair Securement Systems

Current Requirements

The 1991 guidelines require buses, over-the road-buses, and vans to provide wheelchair securement systems at each wheelchair space.[13] The 1991 guidelines specify that the wheelchair securement systems secure the wheelchair so that the occupant faces the front or rear of the vehicle.[14] On large buses that are more than 22 feet in length, at least one wheelchair securement system must be front facing.[15] Side facing securement is not permitted.

Proposed Rule

The proposed rule includes two changes to the current technical requirements for wheelchair securement systems based on research conducted on wheelchair transportation safety since the 1991 guidelines were issued.

T403.3.1 reduces the minimum force that wheelchair securement systems must be designed to restrain wheelchairs and their occupants in the forward longitudinal direction in large vehicles with a gross vehicle weight rating of 30,000 pounds or more. The design force is reduced from 4,000 pounds to 2,000 pounds based on research showing the "g" loads generated on wheelchairs and their occupants in large vehicles under the following conditions: Maximum acceleration (0.2g), maximum braking (0.85g), rapid turning (0.5g), and frontal collision (3g).[16] Wheelchair securement systems that are designed to restrain a force of 2,000 pounds in the forward longitudinal direction in large vehicles would provide an appropriate level of protection based on these "g" loads.

Question 13: Comments are requested on this proposed reduction in design force for wheelchair securement systems in large vehicles. How will the proposed change affect the costs for wheelchair securement systems in large vehicles?

T403.5 modifies the technical requirements for rear facing wheelchair securement systems to include a forward excursion barrier in addition to the current requirement for a padded headrest. The forward excursion barrier extends from the vehicle floor to a height of 24 inches minimum for the full width of the wheelchair space.[17]

Question 14: Comments are requested on including a forward excursion barrier in the technical requirements for rear facing wheelchair securement systems. Are rear facing securement systems commonly provided in buses, over-the road-buses, and vans? Where provided in new buses, over-the road-buses, and vans, do rear facing securement systems currently include forward excursion barriers? Will the forward excursion barrier result in any additional costs for new buses, over-the road-buses, and vans that provide rear facing securement systems?

Recommendations Submitted by Researchers and Safety Experts That Are Not Included in the Proposed Rule

Researchers and safety experts who commented on the drafts of the proposed rule submitted four recommendations regarding the technical requirements for wheelchair securement systems that are not included in the proposed rule. Their recommendations are summarized below.

1. SAE Recommended Practice J2249, Wheelchair Tiedown and Occupant Restraint Systems for Use in Motor Vehicles (June 9, 1999)

Researchers and safety experts recommended that front facing wheelchair securement systems comply with SAE Recommended Practice J2249, Wheelchair Tiedown and Occupant Restraint Systems for Use in Motor

[13] 36 CFR 1192.23(a) and 1192.159(a)(1). The proposed rule does not change this requirement.

[14] 36 CFR 1192.23(d)(4) and 1192.159(d)(4). The proposed rule does not change this requirement.

[15] *Id.* The proposed rule does not change this requirement.

[16] The research is referenced in comments submitted by the Rehabilitation Engineering and Assistive Technology Society of North America and Rehabilitation Engineering Research Center on Wheelchair Transportation Safety. The comments are available on the Access Board's Web site at: *http://www.access-board.gov/transit/*.

[17] The dimensions for the forward excursion barrier are based on comments submitted by the Rehabilitation Engineering and Assistive Technology Society of North America. The comments are available on the Access Board's Web site at: *http://www.access-board.gov/transit/*.

Vehicles (June 9, 1999).[18] SAE Recommended Practice J2249 specifies design requirements, performance requirements, and test methods for wheelchair tiedown and occupant restraint systems for use in motor vehicles, and includes requirements for product marking and labeling and manufacturer's instructions to installers and users.

2. Wheelchair Securement Systems in Small Vehicles

Researchers and safety experts recommended that rear facing wheelchair securement systems not be permitted in small vehicles with a gross vehicle weight rating of less than 30,000 pounds because current wheelchair securement systems have not been designed and tested to secure rear facing wheelchairs in small vehicles and to withstand the high "g" loads generated on wheelchairs and their occupants in a small vehicle by a frontal collision. They also recommended that the 5,000 pounds minimum design force specified in the 1991 guidelines for small vehicles be increased for forward facing wheelchair securement systems.

3. Movement Under Emergency Driving Conditions

Researchers and safety experts recommended that performance specifications and test methods be established for wheelchair securement systems to limit movement of an occupied wheelchair under emergency driving conditions, such as maximum braking and rapid turning.

4. Rear Facing Compartmentalization

Researchers and safety experts recommended that "rear facing compartmentalization" be permitted in large vehicles with a gross vehicle weight rating of 30,000 pounds or more, especially bus rapid transit vehicles. "Rear facing compartmentalization" is used in Europe and Canada. As explained by the researchers and safety experts, in "rear facing compartmentalization" the wheelchair occupant backs as close as possible to a rear-facing padded excursion barrier and there is a means to prevent the wheelchair from tipping into the aisle. "Rear facing compartmentalization" assumes that the wheelchair has brakes which are functioning and that the friction between the wheelchair wheels and the floor is high enough to prevent sliding. "Rear facing compartmentalization" does not require the attachment of wheelchair securement systems to the wheelchair. Researchers and safety experts also recommended that seat belts and shoulder belts should not be required where "rear facing compartmentalization" is permitted in large vehicles.

Question 15: Comments are requested on whether any of the above recommendations should be included in a subsequent rulemaking.

Automated Stop and Route Announcements

Current Requirements

The 1991 guidelines require buses that are more than 22 feet in length and operate in fixed route systems to provide public address systems for announcing stops.[19] The Department of Transportation regulations require stops and routes to be announced.[20] These requirements apply to both public transit agencies and private transit operators. Failure to announce stops and routes is a frequent source of complaints to the Department of Transportation and lawsuits against public transit agencies.

Proposed Rule

Public transit agencies are increasingly deploying intelligent transportation system technologies that enable automated stop and route announcements. Automated announcements provide standardized messages and result in increased compliance with current regulatory requirements.

The drafts of the proposed rule considered requiring public transit agencies to provide automated stop and route announcements on buses that are more than 22 feet in length and operate in fixed route systems. The American Public Transportation Association commented that the cost of providing automated announcements would be burdensome for small public transit agencies, and recommended that only large public transit agencies that operate 100 or more buses in peak service be required to provide automated announcements.

T203.13 requires large public transit agencies that operate 100 or more buses in annual maximum service in fixed route systems, as reported in the National Transit Database, to provide automated stop and route announcements on buses that are more than 22 feet in length and operate in fixed route systems.

The Access Board prepared a report to estimate the costs of this proposed change. The report is available on the Access Board's Web site at: *http://www.access-board.gov/transit/*. According to the National Transit Database, 87 public transit agencies operate 100 or more buses in annual maximum service in fixed route systems. More than 90 percent of these public transit agencies currently provide automated stop and route announcements on buses. The report assumes that the public transit agencies will continue to provide automated announcements on buses in the future, and will not incur any additional costs as a result of the proposed rule.

Only 7 public transit agencies that operate 100 or more buses in annual maximum service in fixed route systems do not currently provide automated stop and route announcements on buses. The total estimated costs of requiring automated announcements for the 7 public transit agencies are presented below. The cost estimates include one-time costs to equip new buses and to set-up backend systems for implementing automated announcements, and on-going maintenance and operation costs for the bus equipment and backend systems. The low cost and high cost scenarios account for variables that can affect the costs.

	Costs	Present value (3%)*	Present value (7%)*
Low Cost Scenario			
Total Costs Over 12 Year Bus Replacement Cycle	$9,548,280	$8,027,897	$6,534,112
Annualized Costs	795,690	668,991	544,509

[18] SAE Recommended Practice J2249 is being revised and updated, and will be published as the American National Standards Institute (ANSI)/Rehabilitation Engineering and Assistive Technology Society of North America (RESNA) WC–18 standard.

[19] 36 CFR 1192.35(a).

[20] 49 CFR 37.167(b) and (c).

	Costs	Present value (3%)*	Present value (7%)*
High Cost Scenario			
Total Costs Over 12 Year Bus Replacement Cycle	19,678,022	16,809,905	13,970,121
Annualized Costs	1,639,835	1,400,825	1,164,767

* Present value is based on discount rates in OMB Circular No. A–94.

Question 16: Comments are requested on the report estimating the costs of requiring automated stop and route announcements, including the data and assumptions in the report.

Forty (40) of the public transit agencies that operate 100 or more buses in annual maximum service in fixed route systems contract with private entities to operate some or all of the buses. The Department of Transportation regulations require a private entity that acquires vehicles to operate in a fixed route system under contract with a public transit agency to comply with the accessibility standards applicable to the public transit agency.[21] The report estimating the costs of requiring automated stop and route announcements identifies the 40 public transit agencies that contract with private entities to operate buses in their fixed route systems, and the private entities that operate the buses. These private entities would have to comply with T203.13 if they acquire buses to operate in fixed route systems under contract with the public transit agencies. These private entities would not be affected by T203.13 if the public transit agencies provide the buses to the private entities to operate, or if the private entities deploy buses from their existing fleets to operate in the fixed route systems under contract with the public transit agencies. Information is not available on whether any of the private entities that contract with the public transit agencies acquire buses to operate in fixed route systems under contract with the public transit agencies.

Question 17: Private entities that contract with public transit agencies operating 100 or more buses in annual maximum service in fixed route systems and acquire buses to operate in the fixed route systems under contract with the public transit agencies, are requested to provide information on the number of buses acquired on an annual basis for operation in the fixed route systems under contract with the public transit agencies, and whether the buses provide automated stop and route announcements.

For public transit agencies that have invested in intelligent transportation system technologies, the incremental cost of providing automated stop and route announcements is relatively low compared to public transit agencies that do not invest in such technologies. The Access Board is considering as an alternative requiring only public transit agencies that have invested in intelligent transportation system technologies to provide automated announcements. Under this alternative, large public transit agencies that have not invested in intelligent transportation system technologies would not be required to do so in order to provide automated announcements. Small public transit agencies that have invested in intelligent transportation system technologies would be required to provide automated announcements, and many of these public transit agencies currently provide automated announcements. The requirement to provide automated announcements would apply only to newly acquired buses. Existing buses would not be required to provide automated announcements.

Question 18: Comments are requested on whether only public transit agencies that have invested in intelligent transportation system technologies should be required to provide automated stop and route announcements.

T704.1 requires automated stop and route announcements to use recorded or digitized human speech. T704.2 requires the stop announcements to be audible within the vehicle, and T704.3 requires the route announcements to be audible at boarding and alighting areas. T704.2 also requires signs within the bus to display stops.

Question 19: Comments are requested on whether there are appropriate standards for audio quality that should be referenced in T704.1 or recommended in advisory information.

Question 20: Comments are requested on whether intelligent transportation system technologies currently in use have the capability to communicate stop and route information to passengers through personal communications devices (e.g., text messaging), in addition to audible and visible announcements through speakers and signs. If intelligent transportation system technologies do not have this capability, are there other technologies that can communicate stop and route information to passengers through personal communications devices (*e.g.,* text messaging)? Comments are requested on the costs and benefits of communicating stop and route information to passengers through personal communications devices.

Service Issues

Transit operators who commented the drafts of the proposed rule requested guidance on the transportability of certain size wheelchairs and mobility devices (*e.g.,* Segways). The Department of Transportation is responsible for issuing regulations regarding the provision of transportation services to individuals with disabilities under the Americans with Disabilities Act. The Department of Transportation regulations specify the size of wheelchairs that must be transported.[22] The Department of Transportation has also issued guidance on the use of Segways on transportation vehicles.[23] The Department of Transportation will conduct a separate rulemaking to amend its regulations so that the accessibility standards included in the regulations are consistent with the revisions to Access Board's transportation vehicle guidelines. Comments on transportability of certain size wheelchairs and mobility devices, and other service issues should be submitted to the Department of Transportation when it amends its regulations.

Section-by-Section Analysis

The other proposed revisions to the 1991 guidelines for buses, over-the-road buses, and vans are discussed below.

[21] 49 CFR 37.23(b).

[22] 49 CFR 37.3 (definition of "wheelchair" and "common wheelchair") and 37.165 (b). This proposed rule does not use the term "common wheelchair" because the relevant technical requirements for lift platforms, ramps and bridgeplates, circulation paths, and wheelchair spaces specify the appropriate dimensions for those features.

[23] Use of "Segways" on Transportation Vehicles [*http://www.fta.dot.gov/civilrights/ada/civil_rights_3893.html*].

Most of the revisions are editorial only, and the requirements are the same as in the 1991 guidelines. Revisions that modify current requirements or add new requirements are discussed under each section below.

Question 21: Comments are requested on whether any of the revisions that modify current requirements or add new requirements would add to the costs of the vehicles. Comments should identify the requirement and section number, and provide specific information about any costs.

Chapter T1: Application and Administration

T101 General

This section clarifies that the scoping and technical requirements apply to the acquisition of new, used, and remanufactured vehicles and the remanufacture of existing vehicles to the extent required by regulations issued by the Department of Transportation. As discussed at the beginning of the preamble, the Department of Transportation regulations specify which public and private entities must comply with the transportation provisions of the ADA, and when transportation vehicles acquired or remanufactured by the public or private entities must be accessible. As explained above, the Department of Transportation will conduct a separate rulemaking to amend its regulations so that the accessibility standards included in the regulations are consistent with the revisions to Access Board's transportation vehicle guidelines. When the Department of Transportation amends its regulations, the Department of Transportation will establish the effective date for the revised accessibility standards.

T102 Equivalent Facilitation

The revisions to this section are editorial only. Transit operators can use alternative designs and technologies that result in substantially equivalent or greater accessibility or usability. The Department of Transportation regulations contain procedures for determining whether alternative designs and technologies provide equivalent facilitation.[24]

T103 Conventions

The revisions to T103.1 on dimensions and T103.2 on tolerances are editorial only. T103.3 explains that figures are provided for information purposes only, except for the International Symbol of Accessibility in Figure T703. T103.4 explains that measurements are stated in metric and U.S. customary units and that each system of measurement is to be used independently of the other. T103.5 explains that the length of buses, over-the-road buses, and vans is measured from standard bumper to standard bumper, exclusive of any additional protrusions.

T104 Definitions

T104.1 adopts the definitions in the Department of Transportation regulations for terms that are used in the proposed rule and are defined in the Department of Transportation regulations. These terms include: Accessible, bus, fixed route system, new vehicle, over-the-road bus, public entity, remanufactured vehicle, used vehicle, and wheelchair.[25] T104.2 uses collegiate dictionaries to determine the meaning of terms that are not defined in the proposed rule or the Department of Transportation regulations. T104.3 explains that singular and plural words, terms, and phrases are used interchangeably. T104.4 adds new definitions for the terms: boarding device, bridgeplate, level boarding bus system, operable part, and surface discontinuities.

Chapter T2: Scoping Requirements

T201 General

This introductory section states that new, used, and remanufactured vehicles are required to comply with the scoping requirements in Chapter 2 to the extent required by the Department of Transportation regulations.

T202 Reduction in Access Prohibited

This section clarifies that modifications to an accessible vehicle must not decrease the accessibility of the vehicle below the requirements in effect at the time of the modification.

T203 Buses, Over-the-Road Buses, and Vans

This section contains the scoping requirements for buses, over-the-road buses, and vans. The scoping requirements address 14 features that affect the accessibility and usability of the vehicles, and reference the technical requirements in Chapters T3 through T8 that the features must comply with to be readily accessible to and usable by individuals with disabilities. Some scoping requirements are based on the size of the vehicles, or apply only to vehicles operated in fixed route systems or vehicles operated by public entities (*i.e.,* State or local government units). The scoping requirements in T203 should be consulted before reading the technical requirements in Chapters T3 through T8 to determine what technical requirements apply to the vehicle.

T203.1 is a general introductory subsection that plainly states the scoping requirements in T203 apply to buses, over-the-road buses, and vans. The subsequent subsections in T203 simply refer to buses, over-the-road buses, and vans as vehicles. Buses, over-the-road buses, and vans are simply referred to as vehicles in the discussion of those subsections below.

Accessible Boarding

The scoping requirements for accessible boarding in T203.2 are modified to address bus rapid transit systems in which some or all of the designated stops have station platforms that are coordinated with the vehicle floor to provide level boarding. These systems are referred to as level boarding bus systems in the proposed rule.

T203.2.1 retains the current requirement in the 1991 guidelines that all vehicles provide lifts or ramps for accessible boarding. The current exception that permits over-the-road buses to provide portable or station-based boarding devices is removed.

T203.2.1 clarifies that lifts and ramps must be capable of being deployed to all designated stops on the route to which the vehicle is assigned and to the roadway.

T203.2.1.2 modifies the scoping requirements for ramps as follows:

- Ramps on vehicles more than 6.7 m (22 feet) in length must be permanently installed and power operated.
- Vehicles that operate in level boarding bus systems where all the designated stops have station platforms are permitted to provide on board the vehicle portable ramps that can be deployed to the roadway in the event that the vehicle breaks down on the roadway.

Additional scoping requirements apply to vehicles operating in level boarding bus systems as follows:

- T203.2.2.1 requires the design of the vehicles to be coordinated with the station platforms to minimize the gap between the vehicle floor and the station platform.
- T203.2.2.2 requires the vehicles to provide ramps or bridgeplates that can be deployed to the station platforms where the gap between the vehicle floor and station platforms is greater than 51 mm (2 inches) horizontally or 16 mm (⅝ inch) vertically when measured at 50 percent passenger load with the vehicle at rest. Where these gap dimensions are not exceeded, accessible boarding can

[24] 49 CFR 37.7(b).

[25] The Department of Transportation regulations define these terms in 49 CFR 37.3.

be provided at station platforms without ramps or bridgeplates. Where ramps or bridgeplates are provided on vehicles, T303.8.2 specifies a 1:8 maximum ramp slope to the station platforms.

• Where ramps or bridgeplates are required to provide accessible boarding at station platforms, T203.2.2.2.1 requires vehicles with doorways on one side of the vehicle to provide ramps or bridgeplates in at least one doorway; and T203.2.2.2.2 requires vehicles with doorways on two sides of the vehicle to provide ramps or bridgeplates in at least one doorway on each side of the vehicle. The ramps or bridgeplates must be permanently installed and power operated. Ramps provided to comply with T203.2.1 can be used to provide accessible boarding at one doorway. Bridgeplates can be used to provide accessible boarding at additional doorways.

The technical requirements for lifts, ramps, and bridgeplates are discussed under Chapter T3.

Wheelchair Spaces

The scoping and technical requirements for wheelchair spaces are discussed under Proposed Changes That Received Substantial Comment.

Circulation Paths

T 203.4.1 requires all circulation paths to comply with the technical requirements for surfaces. The technical requirements for surfaces are discussed under T802.

T203.4.2.1 clarifies that circulation paths must connect each wheelchair space to a doorway with a boarding device that can be deployed to the roadway. Where a portable ramp is permitted on vehicles operating in level boarding bus systems, a circulation path must connect each wheelchair space to a doorway where a portable ramp can be deployed to the roadway.

Additional scoping requirements apply to vehicles operating in level boarding bus systems. T403.4.2.2 requires a circulation path to connect each wheelchair space to a doorway that provides accessible boarding at station platforms. Where doorways are provided on two sides of the vehicle, a circulation path must connect each wheelchair space to a doorway on each side of the vehicle that provides accessible boarding at station platforms.

The technical requirements for circulation paths that connect wheelchair spaces to doorways are discussed under Proposed Changes That Received Substantial Comment.

Doorways

T203.5.1 through T203.5.3 require doorways with lifts or ramps, doorways with level-entry boarding, and doorways with steps on over-the-road buses to comply with the applicable technical requirements in T503, which are discussed under that section. T203.5.4 requires doorways that provide accessible boarding to be identified on the exterior of the vehicle by the International Symbol of Accessibility, unless all the doorways provide accessible boarding. Where lighting is provided at doorways, T203.5.5 requires the lighting to comply with the technical requirements for lighting in T803, which are discussed under that section.

Steps

T203.6 requires steps on vehicles to comply with the technical requirements in T504, which are discussed under that section.

Handrails, Stanchions, and Handholds

The revisions to the scoping requirements for handrails, stanchions, and handholds at passenger doorways, at fare collection devices where provided, and along circulation paths in T203.7.1 are editorial only. Transit operators and vehicle manufacturers commenting on the drafts of the proposed rule noted it is not practical to provide stanchions or handholds on high-back reclining seats that are typically provided on over-the-road buses. T203.7.2 clarifies the location of handrails, stanchions, and handholds at forward and rear-facing seats on large vehicles that are more than that are more than 6.7 m (22 feet) in length. Handholds or stanchions must be provided on the back of low-back non-reclining seats, and handrails must be provided overhead or on overhead luggage racks at high-back reclining seats. The technical requirements for handrails, stanchions, and handholds are discussed under T505.

Wheelchair Securement Systems

The scoping and technical requirements for wheelchair securement systems are discussed under Proposed Changes That Received Substantial Comment.

Seat Belts and Shoulder Belts

The revisions to the scoping requirements for seat belts and shoulder belts in T203.9 are editorial only.

Seats

T203.10.1 clarifies the scoping requirements for the number and location of priority seats for passengers with disabilities on vehicles operated in fixed route systems. At least two seats must be designated as priority seats for passengers with disabilities. The seats must be located as near as practicable to a doorway that is used for both boarding and alighting. Where aisle facing and forward facing seats are provided, one of the priority seats must be an aisle facing seat and one of the priority seats must be a forward facing seat. The revisions to the scoping requirements for priority seat signs in T203.10.2 are editorial only. The signs must inform other passengers to make the seats available to passengers with disabilities.

T203.10.3 modifies the scoping requirements for folding or removable armrests on the aisle side of seats on over-the-road buses. The 1991 guidelines require at least 50 percent of aisle seats, including all moveable or removable seats at wheelchair spaces, to provide folding or removable armrests to permit easy access to the seats by passengers with disabilities.[26] T203.10.3 requires all moveable or removable aisle seats at wheelchair spaces and at least 25 percent of all other aisle seats to provide folding or removable armrests.

Destination and Route Signs

The revisions to the scoping requirements for destination and route signs in T203.11 are editorial only. Where destination and route signs are provided on the exterior of a vehicle, the signs must be provided on the front and boarding side of the vehicle, and must be illuminated. The technical requirements for characters on the signs are discussed under T702.

Public Address Systems

The revisions to the scoping requirements for public address systems in T203.12 are editorial only. Vehicles more than 6.7 m (22 feet) in length that operate in fixed route systems and stop at multiple designated stops must provide a public address system to announce stops and provide other passenger information within the vehicle.

Automated Stop and Route Announcements

The scoping and technical requirements for automated stop and route announcements are discussed under Proposed Changes That Received Substantial Comment.

Stop Request Systems

The revisions to the scoping requirements for stop request systems in T203.14 are editorial only. Vehicles

[26] 36 CFR 1192.161.

more than 6.7 m (22 feet) in length that operate in fixed route systems and stop at multiple designated stops on passenger request must provide a stop request system. The technical requirements for stop request systems are discussed under T705.

Fare Collection Devices

T203.15 requires fare collection devices on vehicles to comply with the technical requirements in T806, which are discussed under that section.

Chapter T3: Boarding Devices

T301 General

This section states that the technical requirements for boarding devices in Chapter T3 apply where required by the scoping requirements in Chapter T2.

T302 Lifts

This section contains the technical requirements for lifts. Advisory information is added after T302.1 regarding the Federal Motor Vehicle Safety Standards (FMVSS) for motor vehicle lifts issued by the National Highway Traffic Safety Administration. The FMVSS are generally consistent with T302. Some of the requirements in T302 are more stringent than the FMVSS, including openings in lift platform surfaces in T302.5.1 and T802.3, and transitions at the boarding edges of threshold ramps on lift platforms in T302.5.5 and T802.5. T302 also contains some requirements that are not addressed in the FMVSS, including door releases for manual operation of lifts in T302.4, boarding direction in T302.5.9, and use by standees in T302.5.10.

T302.2 specifies a 273 kg (600 pounds) minimum design load for lifts. The drafts of the proposed rule considered increasing the design load to 300 kg (660 pounds). Comments from transit operators and vehicle manufacturers recommended that changes to the design load be coordinated with the FMVSS. The FMVSS requires a series of tests for lifts using a standard load of 273 kg (600 pounds). Based on the comments, the design load is not changed.

The following technical requirements in T302 are modified:

- T302.4 requires doors that must be opened to manually operate the lift if the power fails to have interior and exterior manual releases. Exterior releases can have locks to secure the vehicle when unattended. The other requirements in T302.4 for manual operation of lifts in the event of power failure are the same as in the 1991 guidelines.
- T302.5.2 increases the height for measuring the clear width and length above the lift platform surface from 766 mm (30 inches) to 1015 mm (40 inches) minimum to accommodate the controls on power wheelchairs. T 302.5.2 also clarifies that the clear length measured at the platform surface is 1015 mm (40 inches) minimum. The other dimensions in T302.5.2 for the lift platform surface are the same as in the 1991 guidelines.
- T302.5.4 revises the specification for gaps between the lift platform surface and the vehicle floor to be consistent with the specifications for openings in T302.5.3. Gaps and openings must not allow the passage of a sphere more than 16 mm (⅝ inch) in diameter.
- T302.5.5 requires transitions at threshold ramps on the boarding edge of lift platforms to comply with T802.5. T802.5 limits surface discontinuities to 6.4 mm (¼ inch) high maximum without edge treatment and 13 mm (½ inch) high maximum with beveled edge treatment. The bevel must have a slope not steeper than 1:2 (50 percent) applied across the entire surface discontinuity. The other requirements in T302.5.5 for the slope of threshold ramps on the boarding edge of lift platforms are the same as in the 1991 guidelines.
- T302.5.6 revises the requirement for visual contrast on the sides of lift platform surfaces to be consistent with the FMVSS. The perimeter of lift platform surfaces must have a 25 mm (1 inch) minimum outline that contrasts visually with the rest of the platform surface.
- T302.5.7 eliminates the load test for lift platform deflection. The FMVSS specifies a load test for lift platform deflection. The other requirements in T302.5.7 for lift platform deflection are the same as in the 1991 guidelines.

The revisions to the other technical requirements in T302 are editorial only. Those technical requirements are the same as in the 1991 guidelines and are summarized below:

- T302.3.1 requires interlocks to prevent the vehicle from moving when the lift is not stowed and the lift controls from operating unless the interlocks are engaged.
- T302.3.2 requires lift controls to be of a momentary contact type; permit the operator to change the operation sequence; and prevent the lift platform from folding, retracting, or stowing when occupied, unless the platform is designed to be occupied when stowed in the passenger area of the vehicle.
- T302.5.1 requires lift platform surfaces to comply with the technical requirements for surfaces in T802.
- T302.5.3 requires edge barriers on the sides of lift platforms to prevent the wheels of wheelchairs from rolling off the platforms.
- T302.5.8.1 specifies the movement rate for lifts under normal operating conditions.
- T302.5.8.2 specifies the movement rate for lifts in the event of a power failure or single failure of a load carrying component.
- T302.5.9 requires lift platforms to permit passengers who use wheelchairs to board the platforms facing either toward or away from the vehicle.
- T302.5.10 requires lift platforms to be usable by passengers who use mobility aids or have difficulty using steps.
- T302.5.11 requires lift platform to have handrails on two sides of the platform that move in tandem with the platform to provide support for passengers in a standing position.

T303 Ramps and Bridgeplates

This section contains the technical requirements for ramps and bridgeplates. The technical requirements for ramp slope in T303.8 are discussed under Proposed Changes That Received Substantial Comment.

The following technical requirements in T303 are also modified:

- T303.4 requires power operated ramps and bridgeplates to be operated manually if the power fails.
- T303.5 requires ramp and bridgeplate surfaces to comply with the technical requirements in T802 for surfaces. T802.3 requires that openings in surfaces not allow the passage of a sphere more than 16 mm (⅝ inch) in diameter, and that elongated openings be placed so that the long dimension is perpendicular to the dominant direction of travel. Cut-outs are permitted in ramps and bridgeplates that are deployed manually for the operator to grasp the surface. The other requirements in T802 for slip resistant surfaces and protrusions on surfaces are the same as in the 1991 guidelines.
- T303.7 clarifies that edge barriers are required where the edges of ramps and bridgeplates are more than 75 mm (3 inches) above the boarding or alighting area.
- T303.9 requires transitions at the boarding edge of ramps and bridgeplates to comply with T802.5. T802.5 limits surface discontinuities to 6.4 mm (¼ inch) high maximum without edge treatment and 13 mm (½ inch) high maximum with beveled edge treatment. The bevel must have a slope not steeper than 1:2 (50 percent) applied across the entire surface discontinuity.

• T303.10 revises the requirement for visual contrast on the sides of ramp and bridgeplate surfaces. The perimeter of ramp and bridgeplate surfaces must have a 25 mm (1 inch) minimum outline that contrasts visually with the rest of the ramp and bridgeplate surface.

The revisions to the other technical requirements in T303 are editorial only. Those technical requirements are the same as in the 1991 guidelines and are summarized below:

• T303.1 permits ramps and bridgeplates to fold or telescope if all the requirements in T303 are met.

• T303.2 specifies the minimum design load for ramps and bridgeplates. The drafts of the proposed rule considered increasing the design load for ramps and bridgeplates to correspond with an increase in the design load for lifts. As discussed under T302, the design load for lifts is not changed and no corresponding change is made to the design load for ramps and bridgeplates. The design load for ramps and bridgeplates that are 760 mm (30 inches) or more in length is 273 kg (600 pounds). The design load for ramps and bridgeplates that are less than 760 mm (30 inches) in length is 136 kg (300 pounds).

• T303.3 requires ramps and bridgeplates to be firmly attached to the vehicle when in use.

• T303.6 specifies the minimum clear width for ramps and bridgeplates.

• T303.11 specifies the gap permitted between the ramp or bridgeplate surface and the vehicle floor when the ramp or bridgeplate is deployed.

• T303.12 requires portable ramps and bridgeplates to be stowed safely when not in use and not to interfere with the maneuvering of wheelchairs.

Chapter T4: Wheelchair Spaces and Securement Systems

The technical requirements for wheelchair spaces in T402, and wheelchair securement systems in T403 are discussed under Proposed Changes That Received Substantial Comment. The revisions to the technical requirements for seat belts and shoulder belts in T404 are editorial only.

Chapter T5: Circulation Paths and Doorways on Buses, Over-the-Road Buses, and Vans

T501 General

This section states that the technical requirements for circulation paths on buses, over-the-road buses, and vans in Chapter T3 apply where required by the scoping requirements in Chapter T2.

T502 Circulation Paths

The technical requirements in T502 for circulation paths that connect wheelchair spaces to doorways that provide accessible boarding are discussed under Proposed Changes That Received Substantial Comment.

T503 Doorways

T503.1 specifies the minimum vertical clearance at doorways with lifts or ramps. The revisions to this section are editorial only, and the technical requirements are the same as in the 1991 guidelines: 1420 mm (56 inches) on vehicles 6.7 m (22 feet) or less in length; 1650 mm (65 inches) on over-the-road buses; and 1725 mm (68 inches) on other vehicles more than 6.7 m (22 feet) in length. A minimum clear opening is not specified for doorways with lifts or ramps since a minimum clear width of 760 mm (30 inches) is specified for lift platforms in T302.5.2 and for ramps in T303.6.

T503.2 adds new technical requirements for doorways with level entry boarding.

T503.2.1 specifies the minimum clear opening at the doorways: 810 mm (32 inches).

T503.2.2 requires thresholds at the doorways to be marked by a contrasting strip 25 mm (1 inch) wide minimum.

T503.3 specifies the minimum clear opening at doorways with steps on over-the-road buses. The revisions to this section are editorial only, and the technical requirements are the same as in the 1991 guidelines: 760 mm (30 inches) from the lowest step tread to a height 1220 mm (48 inches) above the lowest step tread. Where compliance is not structurally feasible, the clear opening is permitted to be 685 mm (27 inches). The clear opening is permitted to taper to 457 (18 inches) from a height 1220 mm (48 inches) above the lowest step tread to the top of the doorway. Hinges and other door mechanisms are permitted to protrude 100 m (4 inches) maximum into the clear opening.

T504 Steps

T504.2 requires step tread surfaces to comply with the technical requirements for surfaces in T802, which are further discussed under that section. T504.3 clarifies the current requirement for contrasting strips at step tread edges by specifying the minimum width of the strips: 25 mm (1 inch).

T505 Handrails, Stanchions, and Handholds

The revisions to the technical requirements for handrails, stanchions, and handholds in T505 are editorial only, and the requirements are the same as in the 1991 guidelines. T505.2 specifies that handrails and stanchions at doorways be configured so that passengers with disabilities can grasp them from outside the vehicle and use them throughout the boarding and alighting process. T505.3 specifies that handrails at fare collection devices be configured so that passengers with disabilities can use them for support when using the fare collection device. T505.4 specifies that handrails and stanchions along circulation paths be configured so that passengers with disabilities can use them when moving through the vehicle. T505.5 specifies that handholds and stanchions on the backs of forward and rear facing seats be located directly adjacent to the aisle so that passengers with disabilities can use them when moving from the aisles to the seats.

Chapter T6: Circulation Paths and Doorways on Rail Vehicles [Reserved]

The technical requirements for circulation paths and doorways on rail vehicles will be included in Chapter T6 when the guidelines for rail vehicles are revised.

Chapter T7: Communication Features

T701 General

This section states that the technical requirements for communication features in Chapter T7 apply where required by the scoping requirements in Chapter T2.

T702 Signs

T702 revises the technical requirements for characters on signs to be consistent with the accessibility guidelines for buildings and facilities. The technical requirements address character proportions, character height, stroke thickness, character spacing, line spacing, and contrast.

T703 International Symbol of Accessibility

T703 adds new technical requirements for the International Symbol of Accessibility, and specifies that the symbol have a background field of at least 100 mm (4 inches) and a non-glare finish, and contrast with its background.

T704 Automated Stop and Route Announcements

The technical requirements for automated stop and route announcements in T704 are discussed under Proposed Changes That Received Substantial Comment.

T705 Stop Request Systems

T705.1 clarifies the technical requirements for audible and visible indicators for stop request systems. Audible stop indicators can be verbal or non-verbal signals. Visible stop indicators can be a light or sign. T705.2 clarifies the location of operable parts for stop request systems at wheelchair spaces, and specifies that the operable parts be located on a side wall or partition 610 mm (24 inches) minimum and 915 mm (36 inches) maximum from the back of the wheelchair space.

Chapter T8: Other Features

T801 General

This section states that the technical requirements for other features in Chapter T8 apply where required by the scoping requirements in Chapter T2 or where referenced in another technical requirement.

T802 Surfaces

T802 contains the technical requirements for surfaces. These requirements are referenced in: T203.4.1 for all circulation paths; T302.5.1 for lift platforms; T303.5 for ramps and bridgeplates; T402.2 for wheelchair spaces; and T504.2 for step treads.

T802.2 requires surfaces to be slip resistant. The 1991 guidelines contain the same requirement.

T802.3 specifies that openings in surfaces not allow the passage of a sphere more than 16 mm (⅝ inch) in diameter, and that elongated openings be placed so that the long dimension is perpendicular to the direction of travel. Cut-outs are permitted in lift platforms that are folded and stowed manually and in ramps and bridgeplates that are deployed manually for the operator to grasp the surface. The 1991 guidelines contain similar requirements for lift platforms.

T802.4 permits protrusions on surfaces to be 6.4 mm (¼ inch) high maximum. The 1991 guidelines contain the same requirement for lift platforms and ramps.

T802.5 addresses differences in levels between two adjacent surfaces, which are referred to as surface discontinuities. Surface discontinuities can be up to 6.4 mm (¼ inch) high without beveled edge treatment, and up to 13 mm (½ inch) high with beveled edge treatment. The 1991 guidelines contain the same requirement for thresholds at lift platforms and ramps. T802.5 modifies the requirement for beveled edge treat by specifying that the bevel extend across the entire surface discontinuity.

T803 Doorway Lighting

T803 addresses doorway lighting and specifies illuminance levels at lift platforms, ramps and bridgeplates, steps, and boarding and alighting areas adjacent to doorways. The illuminance levels are the same as specified in the 1991 guidelines except for lift platforms, which is modified to be consistent with the illuminance levels in the Federal Motor Vehicle Safety Standards for lifts on motor vehicles.

T804 Additional Requirements for Handrails, Stanchions, and Handholds

T804 contains additional technical requirements for handrails, stanchions, and handholds. T804.2 simplifies the requirements for edges by requiring them to be rounded. T804.3 modifies the requirements for cross section to be consistent with the accessibility guidelines for buildings and facilities. The revisions to the requirements in T804.4 on clearances and in T804.5 on structural strength of handrails on lift platforms are editorial only, and those requirements are the same requirement as in the 1991 guidelines.

T805 Operable Parts

T805 contains technical requirements for operable parts. These requirements are referenced in: T706.2 for stop request systems and T806 for fare collection devices.

T805.2 modifies the location height for operable parts: 610 mm (24 inches) minimum and 1220 mm (48 inches) maximum above the floor.

T805.3 requires operation without tight grasping, pinching, or twisting of the wrist and a maximum activation force of 22.5 N (5 pounds). The 1991 guidelines contain the same requirements for stop request systems.

T806 Fare Collection Devices

T806 requires fare collection devices to comply with the technical requirements for operable parts in T805, and the operable parts on fare collection devices to be located so that a wheelchair can approach within 255 mm (10 inches) maximum.

Regulatory Process Matters

Executive Order 12866: Regulatory Planning and Review

This proposed rule is a significant regulatory action under Executive Order 12866 and has been reviewed by the Office of Management and Budget. The Access Board prepared a report to estimate the costs of requiring public transit agencies that operate 100 or more buses in annual maximum service in fixed route systems to provide automated stop and route announcements on buses that are more than 6.7 m (22 feet) in length and operate in fixed route systems. The report is available on the Access Board's Web site at: *http://www.access-board.gov/transit/*. The report is discussed under Proposed Changes That Received Substantial Comment. Vehicle manufacturers and transit operators are requested to provide information in Questions 1 through 21 on the feasibility and costs of the other proposed changes. The Access Board will consider this information along with other comments on the proposed rule when preparing the final rule and will prepare additional costs estimates based on the information provided, as appropriate.

Regulatory Flexibility Act: Initial Regulatory Flexibility Analysis

The Access Board prepared the following initial regulatory flexibility analysis to describe how the proposed rule affects small entities.

Legal Basis, Objectives, and Reasons for Revising and Updating the Guidelines

The Americans with Disabilities Act requires the Access Board to issue guidelines for transportation vehicles that are readily accessible to and usable by individuals with disabilities. The Access Board initially issued accessibility guidelines for transportation vehicles in 1991. The proposed rule revises and updates the accessibility guidelines for buses, over-the-road buses, and vans. The objectives for revising the guidelines are discussed in the preamble. Proposed changes that received substantial comment when drafts of the proposed rule were made available are discussed at the beginning of the preamble, including the reasons for each of the proposed changes. The other revisions to the guidelines are discussed after the proposed changes that received substantial comment. Most of these revisions are editorial only and restate current requirements in plain language that is clear and easy to understand.

Small Entities Affected

Small public entities (*i.e.,* State or local government units with a population of less than 50,000) and small private entities (*i.e.,* small businesses that meet the size standards established by the Small Business Administration) are affected by the Access Board's guidelines to the extent that they are subject to the Americans with Disabilities Act and the Department of Transportation regulations implementing the

Americans with Disabilities Act. The Department of Transportation regulations apply to the following entities:

- Public entities that provide designated public transportation (*i.e.,* general or special transportation service, including charter service, provided to the general public on a regular and continuing basis), excluding public school transportation. 49 CFR 37.21 (a) (1) and 37.27 (a).
- Private entities that provide specified public transportation (*i.e.,* general or special transportation service, including charter service, provided to the general public on a regular and continuing basis). 49 CFR 37.21 (a) (2).
- Private entities that are not primarily engaged in the business of transporting people but operate a demand responsive or fixed route system. 49 CFR 37.21 (a) (3).

Reporting and Recordkeeping Requirements, Other Compliance Requirements, and Significant Alternatives

There are no reporting or recordkeeping requirements. Proposed changes that received substantial comment when drafts of the proposed rule were made available are discussed at the beginning of the preamble. Questions 1 through 21 request comments on the proposed changes, including information on the feasibility and costs on the proposed changes. The following questions may be of interest to small entities:

- Questions 1 through 6 request information on the feasibility and costs associated with the proposed 1:6 maximum slope requirement for buses and vans equipped with ramps, as well as alternatives.
- Questions 7, 8, and 9 requests information on the feasibility and costs associated with the proposed 34 inches minimum clear width requirement for circulation paths connecting wheelchair spaces to doorways that provide accessible boarding, and alternative performance specifications and test methods.
- Questions 11 and 12 request information on the feasibility and costs associated with the proposed requirements for maneuvering clearances at wheelchair spaces.
- Questions 13 and 14 request information on costs associated with proposed changes to the technical requirements for wheelchair securement systems on large vehicles with a gross vehicle weight rating 30,000 pounds or more.
- Question 17 requests information from private entities who contract with public transit agencies that operate 100 or more buses in annual maximum service in fixed route systems and acquire buses to operate in the fixed route systems under contract with the public transit agencies regarding the proposed requirement for automated stop and route announcements.

Comments are also requested on alternatives to any of the new or modified requirements in the proposed rule. The Access Board will consider the comments and information on the proposed changes when preparing the final rule and final regulatory flexibility analysis, and will prepare additional cost estimates, as appropriate.

Other Applicable Federal Rules

The Americans with Disabilities Act requires the Department of Transportation to issue regulations to implement the transportation provisions of the statute. The Department of Transportation regulations include accessibility standards for transportation vehicles that are consistent with the Access Board's transportation vehicle guidelines. The Department of Transportation's regulations are legally enforceable. The Department of Transportation will conduct a separate rulemaking to amend its regulations so that the accessibility standards included in the regulations are consistent with the revisions to Access Board's transportation vehicle guidelines. When the Department of Transportation amends its regulations, the Department of Transportation will establish the effective date for the revised accessibility standards.

Executive Order 13132: Federalism

The proposed rule adheres to the fundamental federalism principles and policy making criteria in Executive Order 13132. The proposed rule revises and updates guidelines issued under the Americans with Disabilities Act, civil rights legislation that was enacted by Congress pursuant to its authority to enforce the Fourteenth Amendment to the U.S. Constitution and to regulate commerce. The Americans with Disabilities Act was enacted "to provide a clear and comprehensive national mandate for the elimination of discrimination against individuals with disabilities" and "to ensure that the Federal government plays a central role in enforcing the standards established in this chapter on behalf of individuals with disabilities. 42 U.S.C. 12101 (b) (1) and (3). The Americans with Disabilities Act recognizes the authority of State and local governments to enact and enforce laws that "provide for greater or equal protection for the rights of individuals with disabilities than are afforded by this chapter." 42 U.S.C. 12201 (b). The Access Board made drafts of the proposed rule available for public review and comment. State and local governments, including public transit agencies, provided comments on the proposed changes. As discussed in the preamble, the comments were considered and changes were made to the proposed rule based on the comments.

Unfunded Mandates Reform Act

The Unfunded Mandates Reform Act does not apply to proposed or final rules that enforce constitutional rights of individuals or enforce statutory rights that prohibit discrimination on the basis of race, color, sex, national origin, age, handicap, or disability. Since the proposed rule is issued under the Americans with Disabilities Act, which prohibits discrimination on the basis of disability, an assessment of the rule's effect on State, local, and tribal governments, and the private sector is not required by the Unfunded Mandates Reform Act.

List of Subjects in 36 CFR Part 1192

Civil rights, Individuals with disabilities, Transportation.

David M. Capozzi,

Executive Director.

For the reasons stated in the preamble, the Access Board proposes to amend 36 CFR part 1192 as follows:

PART 1192—AMERICANS WITH DISABILITIES ACT (ADA) ACCESSIBILITY GUIDELINES FOR TRANSPORTATION VEHICLES

1. The authority citation for 36 CFR part 1192 continues to read as follows:

Authority: 42 U.S.C. 12204.

2. Amend part 1192 by revising subpart B to read as follows:

Subpart B—Buses, Over-the-Road Buses, and Vans

§ 1192.21 Accessibility guidelines.

The accessibility guidelines for buses, over-the-road buses, and vans are set forth in the Appendix to this part. The guidelines apply to the acquisition of new, used, and remanufactured transportation vehicles, and the remanufacture of existing transportation vehicles to the extent required by regulations issued by the Department of Transportation pursuant to the Americans with Disabilities Act at 49 CFR part 37.

Subpart G—[Removed]

3. Amend part 1192 by removing subpart G.

Subpart F—[Redesignated as Subpart G]

4. Amend part 1192 by redesignating subpart F as subpart G.

5. Revise the appendix to part 1192 to read as follows:

Appendix to Part 1192—Americans With Disabilities Act (ADA) Accessibility Guidelines for Transportation Vehicles

BILLING CODE 8150–01–P

TABLE OF CONTENTS

APPENDIX TO PART 1192 — AMERICANS WITH DISABILITIES ACT (ADA) ACCESSIBILITY GUIDELINES FOR TRANSPORTATION VEHICLES

CHAPTER T1: APPLICATION AND ADMINISTRATION 1

T101 General 1
T102 Equivalent Facilitation 1
T103 Conventions 1
T104 Definitions 2

CHAPTER T2: SCOPING REQUIREMENTS 3

T201 General 3
T202 Reduction in Access Prohibited 3
T203 Buses, Over-the-Road Buses, and Vans 3

CHAPTER T3: BOARDING DEVICES 8

T301 General 8
T302 Lifts 8
T303 Ramps and Bridgeplates 11

CHAPTER T4: WHEELCHAIR SPACES AND SECUREMENT SYSTEMS 14

T401 General 14
T402 Wheelchair Spaces 14
T403 Wheelchair Securement Systems 16
T404 Seat Belts and Shoulder Belts 18

CHAPTER T5: CIRCULATION PATHS AND DOORWAYS ON BUSES, OVER-THE-ROAD BUSES, AND VANS 19

T501 General 19
T502 Circulation Paths 19
T503 Doorways 20
T504 Steps 21
T505 Handrails, Stanchions, and Handholds 21

CHAPTER T6: CIRCULATION PATHS AND DOORWAYS ON RAIL VEHICLES [Reserved]

CHAPTER T7: COMMUNICATION FEATURES 22

T701 General 22
T702 Signs 22
T703 International Symbol of Accessibility 22
T704 Automated Stop and Route Announcements 23
T705 Stop Request Systems 23

CHAPTER T8: OTHER FEATURES 24

T801 General 24
T802 Surfaces 24
T803 Doorway Lighting 25
T804 Additional Requirements for Handrails, Stanchions, and Handholds 25
T805 Operable Parts 26
T806 Fare Collection Devices 27

CHAPTER T1: APPLICATION AND ADMINISTRATION

T101 General. This document contains scoping and technical requirements for vehicles that are readily accessible to and usable by individuals with disabilities. The requirements apply to the acquisition of new, used, and remanufactured vehicles and the remanufacture of existing vehicles to the extent required by regulations in 49 CFR Part 37 issued by the Department of Transportation under the Americans with Disabilities Act of 1990 (ADA).

> **Advisory T101 General.** The Department of Transportation has issued regulations under the Americans with Disabilities Act that contain additional requirements regarding nondiscrimination in the provision of transportation services to individuals with disabilities. Transit operators must comply with the Department of Transportation regulations, in addition to this document.

T102 Equivalent Facilitation. The requirements in this document do not prevent the use of alternative designs and technologies that result in substantially equivalent or greater accessibility and usability. The Department of Transportation regulations contain procedures in 49 CFR §37.7 for determining whether alternative designs and technologies provide equivalent facilitation.

T103 Conventions

T103.1 Dimensions. Dimensions that are not stated as maximum or minimum are absolute.

T103.2 Tolerances. All dimensions are subject to conventional industry tolerances for manufacturing processes, material properties, and field conditions.

> **Advisory T103.2 Tolerances.** Tolerances are not intended to be variances that can be used in design. Information on specific tolerances may be available from industry or trade organizations and published references.

T103.3 Figures. Figures are provided for informational purposes only, except for Figure T703.

T103.4 Units of Measurement. Measurements are stated in metric and U.S. customary units. The values stated in each system (metric or U.S. customary units) may not be exact equivalents, and each system shall be used independently of the other.

> **Advisory T103.4 Units of Measurement.** Users should work entirely within one system of measurement, either metric or U.S. customary units. Combining values from the two systems may result in non-compliance.

T103.5 Vehicle Length. The length of buses, over-the-road buses, and vans is measured from standard bumper to standard bumper, exclusive of any additional protrusions.

> **Advisory T103.5 Vehicle Length.** Vehicle length is measured with the vehicle as supplied by the original equipment manufacturer. After manufacture additions such as bicycle racks are not included when measuring vehicle length.

T104 Definitions

T104.1 General. For the purpose of this document, the terms defined in T104.4 have the indicated meaning. Terms used in this document that are defined in regulations issued by the Department of Transportation at 49 CFR 37.3 have the meaning indicated in those regulations.

> **Advisory T104.1 General.** The following terms that are used in this document are defined in the Department of Transportation regulations: accessible, bus, fixed route system, new vehicle, public entity, over-the-road bus, remanufactured vehicle, used vehicle, and wheelchair.

T104.2 Undefined Terms. The meaning of terms not specifically defined in T104.4 or in regulations issued by the Department of Transportation shall be as defined by collegiate dictionaries in the sense that the context implies.

T104.3 Interchangeability. Words, terms, and phrases used in the singular include the plural; and words, terms, and phrases used in the plural include the singular.

T104.4 Defined Terms.

Boarding device. A lift, ramp, or bridgeplate.

Bridgeplate. A short plate or short ramp designed to bridge a horizontal or vertical gap between a vehicle floor and a station platform, or between a vehicle floor and a lift platform.

Level boarding bus system. A system in which buses operate where some or all of the designated stops have station platforms, and the design of the station platforms and the vehicles are coordinated to provide level boarding.

Operable part. A component of a device or system used to insert or withdraw objects, or to activate, deactivate, adjust, or connect to the device or system. Operable parts include, but are not limited to, buttons, levers, knobs, smart card targets, coin and card slots, pull-cords, jacks, data ports, electrical outlets, and touch screens.

Surface discontinuities. Differences in level between two adjacent surfaces.

CHAPTER T2: SCOPING REQUIREMENTS

T201 General. New, used, and remanufactured vehicles shall comply with the scoping requirements in Chapter T2 to the extent required by regulations in 49 CFR Part 37 issued by the Department of Transportation under the Americans with Disabilities Act of 1990 (ADA).

T202 Reduction in Access Prohibited. Modifications to an accessible vehicle shall not decrease or have the effect of decreasing the accessibility of the vehicle below the requirements of this document that are in effect at the time of the modification.

T203 Buses, Over-the-Road Buses, and Vans

T203.1 General. Buses, over-the-road buses, and vans shall comply with T203.

T203.2 Accessible Boarding. Vehicles shall provide accessible boarding in accordance with T203.2.

T203.2.1 Minimum Requirement for All Vehicles. All vehicles shall provide in at least one doorway lifts or ramps that are capable of being deployed to all designated stops on the route to which the vehicle is assigned and to the roadway.

T203.2.1.1 Lifts. Lifts shall comply with T302.

T203.2.1.2 Ramps. Ramps shall comply with T303. Ramps provided on vehicles more than 6.7 m (22 feet) in length shall be permanently installed and power operated. Vehicles that operate only in level boarding bus systems where all the designated stops have station platforms shall be permitted to provide on board the vehicle portable ramps that are capable of being deployed to the roadway.

T203.2.2 Additional Requirements for Level Boarding Bus Systems. Vehicles operating in level boarding bus systems shall comply with the additional requirements in T203.2.2.

T203.2.2.1 Vehicle Floor and Station Platform Coordination. The design of the vehicles shall be coordinated with the station platforms to minimize the gap between the vehicle floor and the station platforms.

T203.2.2.2 Ramps and Bridgeplates. Where the gap between the vehicle floor and the station platforms is greater than 51 mm (2 inches) horizontally or 16 mm (5/8 inch) vertically when measured at 50 percent passenger load with the vehicle at rest, vehicles shall provide ramps or bridgeplates that are capable of being deployed to the station platforms in accordance with T203.2.2.2. Ramps and bridgeplates shall comply with T303, and shall be permanently installed and power operated.

Advisory T203.2.2.2 Ramps and Bridgeplates. Ramps provided to comply with T203.2.1 can be used to comply with T203.2.2.2. T303.8.1 requires that ramps provided to comply with T203.2.1 must have slopes not steeper than 1:6 (17 percent) when deployed at stops without station platforms and to the roadway. T303.8.2 requires that ramps and bridgeplates provided to comply with T203.2.2.2 must have slopes not steeper than 1:8 (12.5 percent) when deployed to station platforms. Additional advisory information on ramp and bridgeplate slopes is provided in Advisory T303.8.1.

T203.2.2.2.1 Doorways on One Side of Vehicle. Where doorways are provided on one side of the vehicle to serve station platforms, vehicles shall provide ramps or bridgeplates in at least one doorway.

T203.2.2.2.2 Doorways on Two Sides of Vehicle. Where doorways are provided on two sides of the vehicle to serve station platforms, vehicles shall provide ramps or bridgeplates in at least one doorway on each side of the vehicle.

Advisory T203.2.2.2.2 Doorways on Two Sides of Vehicle. Vehicles operating in level boarding bus systems with center and side station platforms provide doorways on two sides of the vehicle to serve the station platforms.

T203.3 Wheelchair Spaces. Vehicles shall provide wheelchair spaces complying with T402 in accordance with T203.3.

Advisory T203.3 Wheelchair Spaces. T203.8 requires vehicles to provide securement systems at each wheelchair space. T403.2 requires securement systems to secure wheelchairs so that the occupant faces the front or rear of the vehicle. Side facing securement is not permitted.

T203.3.1 Large Vehicles. Vehicles more than 6.7 m (22 feet) in length shall provide at least two wheelchair spaces.

T203.3.2 Small Vehicles. Vehicles 6.7 m (22 feet) or less in length shall provide at least one wheelchair space.

T203.3.3 Location. Wheelchair spaces shall be located as near as practicable to doorways that provide accessible boarding complying with T203.2.

T203.3.4 Signs. Wheelchair spaces shall be identified by the International Symbol of Accessibility complying with T703.

T203.4 Circulation Paths. Circulation paths on vehicles shall comply with T203.4.

T203.4.1 Surfaces. All circulation path surfaces shall comply with T802.

T203.4.2 Wheelchair Spaces. Circulation paths shall connect each wheelchair space to doorways in accordance with T203.4.2. Circulation paths connecting wheelchair spaces to doorways shall comply with T502.

T203.4.2.1 Doorways with Boarding Devices. On all vehicles, a circulation path shall connect each wheelchair space to a doorway with a boarding device that can be deployed to the roadway. Where a portable ramp is permitted to be provided on board a vehicle by T203.2.1.2, a circulation path shall connect each wheelchair space to a doorway where the portable ramp can be deployed to the roadway.

T203.4.2.2 Additional Requirements for Level Boarding Bus Systems. Vehicles operating in level boarding bus systems shall comply with the additional requirements in T203.4.2.2.

Advisory T203.4.2.2 Level Boarding Bus Systems. Vehicles operating in level boarding bus systems must comply with T203.4.2.1 and T203.4.2.2.

T203.4.2.2.1 Doorways on One Side of Vehicle. Where doorways are provided on one side of the vehicle to serve station platforms, a circulation path shall connect each wheelchair space to a doorway that provides accessible boarding complying with T203.2.2.

T203.4.2.2.2 Doorways on Two Sides of Vehicle. Where doorways are provided on two sides of the vehicle to serve station platforms, a circulation path shall connect each wheelchair space to a doorway on each side of the vehicle that provides accessible boarding complying with T203.2.2.

T203.5 Doorways. Doorways on vehicles shall comply with T203.5.

T203.5.1 Doorways with Lifts or Ramps. Doorways with lifts or ramps shall comply with T503.1.

T203.5.2. Doorways with Level Entry Boarding. Doorways with level entry boarding shall comply with T503.2.

T203.5.3 Doorways on Over-the-Road Buses. On over-the-road buses, doorways with steps shall comply with T503.3.

T203.5.4 Signs. Doorways that provide accessible boarding complying with T203.2 shall be identified on the exterior of the vehicle by the International Symbol of Accessibility complying with T703. Where all the doorways provide accessible boarding complying with T203.2, the doorways shall not be required to be identified by the International Symbol of Accessibility.

T203.5.5 Lighting. Where lighting is provided at doorways, lighting shall comply with T803.

T203.6 Steps. Steps on vehicles shall comply with T504.

T203.7 Handrails, Stanchions, and Handholds. Vehicles shall provide handrails, stanchions, and handholds complying with T505 in accordance with T203.7.

T203.7.1 All Vehicles. All vehicles shall provide handrails and stanchions at passenger doorways, at fare collection devices where provided on vehicles, and along all circulation paths.

T203.7.2 Large Vehicles. Vehicles more than 6.7m (22 feet) in length shall provide handholds, stanchions, or handrails at forward and rear facing seats in accordance with T203.7.2.

T203.7.2.1 Non-Reclining Low-Back Seats. Handholds or stanchions shall be provided on the back of non-reclining low-back seats.

T203.7.2.2 Reclining High-Back Seats. Handrails shall be provided overhead or on overhead luggage racks at reclining high back seats.

T203.8 Wheelchair Securement Systems. Vehicles shall provide wheelchair securement systems complying with T403 at each wheelchair space.

T203.9 Seat Belts and Shoulder Belts. Vehicles shall provide seat belts and shoulder belts complying with T404 at each wheelchair space.

T203.10 Seats. Seats on vehicles shall comply with T203.10.

T203.10.1 Priority Seats. Vehicles operated in fixed-route systems shall designate at least two seats as priority seats for passengers with disabilities. The priority seats shall be located as near as practicable to a doorway that is used for both boarding and alighting. Where aisle facing seats and forward facing seats are provided, one of the priority seats shall be an aisle facing seat, and one of the priority seats shall be a forward facing seat.

T203.10.2 Signs. Priority seats required by T203.10.1 shall be identified by signs complying with T702 that inform other passengers to make the seats available to passengers with disabilities.

T203.10.3 Aisle Seats on Over-the-Road Buses. Where armrests are provided on the aisle side of seats on over-the-road buses, the aisle seats shall comply with T203.10.3.

T203.10.3.1 Moveable or Removable Seats. Folding or removable armrests shall be provided on the aisle side of all moveable or removable seats at wheelchair spaces.

T203.10.3.2 Fixed Seats. Folding or removable armrests shall be provided on the aisle side of at least 25 percent of all fixed aisle seats.

T203.11 Destination and Route Signs. Where signs displaying destination or route information are provided on the exterior of a vehicle, the signs shall be provided on the front and boarding side of the vehicle. The signs shall be illuminated and shall comply with T702.

T203.12 Public Address System. Vehicles more than 6.7 m (22 feet) in length that operate in fixed route systems and stop at multiple designated stops shall provide a public address system to announce stops and provide other passenger information within the vehicle.

T203.13 Automated Stop and Route Announcements. Public entities that operate 100 or more buses in annual maximum service in fixed route systems, as reported in the National Transit Database in accordance with 49 CFR Part 630, shall provide automated stop and route announcements complying with T704 on buses that are more than 6.7 m (22 feet) in length and operate in fixed route systems.

T203.14 Stop Request Systems. Vehicles more than 6.7 m (22 feet) in length that operate in fixed route systems and stop at multiple designated stops on passenger request shall provide stop request systems complying with T705.

T203.15 Fare Collection Devices. Where fare collection devices are provided on vehicles, fare collection devices shall comply with T806.

CHAPTER T3: BOARDING DEVICES

T301 General. The technical requirements in Chapter T3 shall apply where required by Chapter T2.

T302 Lifts

T302.1 General. Lifts shall comply with T302.

> Advisory T302.1 General. The National Highway Traffic Safety Administration has established Federal Motor Vehicle Safety Standards (FMVSS) at 49 CFR § 571.403 and § 571.404 for lifts that are designed for use on motor vehicles. The FMVSS are generally consistent with T302. T302 has some requirements that are more stringent than the FMVSS, including openings in lift platform surfaces in T302.5.1 and T802.3, and transitions at the boarding edges of threshold ramps on lift platforms in T302.5.5 and T802.5. T302 also has some requirements that are not addressed in the FMVSS, including door releases for manual operation of lifts in T302.4, boarding direction in T302.5.9, and use by standees in T302.5.10.

T302.2 Design Load. The lift design load shall be 273 kg (600 pounds) minimum. Load carrying components that are subject to wear shall have a design safety factor of at least six, based on the ultimate strength of the material. Other components that are not subject to wear shall have a design safety factor of at least three, based on the ultimate strength of the material.

T302.3 Controls. Lift controls shall comply with T302.3.

T302.3.1 Interlocks. Lift controls shall be interlocked with the vehicle brakes, transmission, propulsion system, or door, or shall provide other systems to prevent the vehicle from moving when the lift is not stowed. Lift controls shall not be operable unless the interlocks are engaged.

T302.3.2 Sequence. Lift controls shall be of a momentary contact type requiring continuous manual pressure. Lift controls shall permit the operator to change the operation sequence. Lift controls shall not permit the lift platform to be folded, retracted, or stowed when occupied, unless the platform is designed to be occupied when stowed in the passenger area of the vehicle.

> Advisory T302.3.2 Sequence. A rotary lift is an example of a lift platform that is designed to be occupied when the platform is rotated into a stowed position in the passenger area of the vehicle.

T302.4 Manual Operation. Lifts shall be capable of being operated manually if the power to the lift fails. The manual operation shall be safe for the occupant and operator when operated according to the manufacturer's instructions. When operated manually, the lift platform shall deploy and lower to the boarding and alighting area or the roadway with an occupant; shall rise to the vehicle floor without an occupant; and shall stow. The lift platform shall not fold, retract, or stow when occupied, unless the platform is designed to be occupied when stowed in the passenger area of the vehicle. Doors that must be opened to allow the lift to operate shall have interior and exterior manual releases.

T302.5 Platforms. Lift platforms shall comply with T302.5.

T302.5.1 Surfaces. Lift platform surfaces shall comply with T802.

T302.5.2 Size. The lift platform clear width shall be 720 mm (28½ inches) minimum measured at the platform surface, and 760 mm (30 inches) minimum measured from 51 mm (2 inches) above the platform surface to 1015 mm (40 inches) minimum above the platform surface. The lift platform clear length shall be 1015 mm (40 inches) minimum measured at the platform surface and 1220 mm (48 inches) minimum measured from 51 mm (2 inches) above the platform surface to 1015 mm (40 inches) above the platform surface.

Advisory T302.5.2 Size. A surface width of 720 mm (28.5 inches) minimum is specified for the lift platform to accommodate some protrusions for handrail attachment brackets. A wider lift platform is recommended because it is more usable by passengers who use wheelchairs, and accommodates a broader range of passengers with disabilities. The lift platform width should not exceed the clear opening of the doorway, or the clear width of the circulation path connecting the doorway to the wheelchair space.

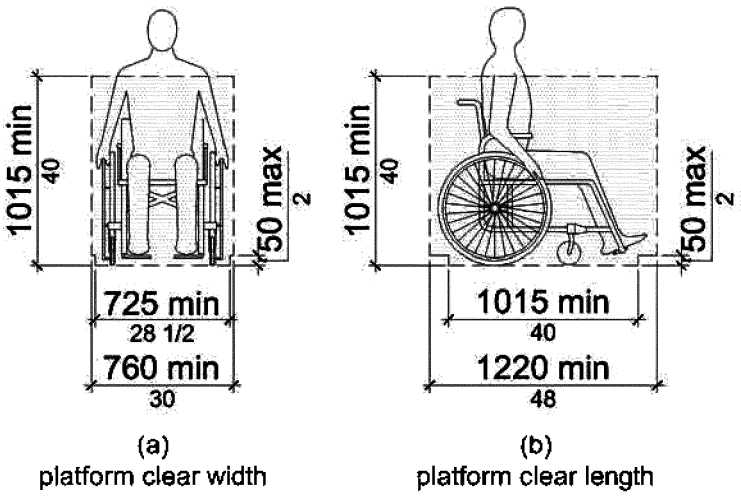

Figure T302.5.2
Size

T302.5.3 Edge Barriers. Lift platforms shall have edge barriers complying with Table T302.5.3 to prevent the wheels of wheelchairs from rolling off the platforms. Openings between lift platform surfaces and raised barriers shall not permit passage of a sphere 16 mm (5/8 inch) in diameter. Edge barriers shall not interfere with the maneuvering of wheelchairs.

Table T302.5.3 Lift Platform Edge Barriers

Side of Lift Platform	Edge Barrier Required
Side of lift platform used to enter and exit the platform at boarding and alighting area	Moveable barrier or supplementary system capable of preventing power wheelchairs from riding over or defeating the barrier or supplementary system. The barrier or supplementary system shall automatically raise or engage, and remain raised or engaged when the lift platform is more than 75 mm (3 inches) above the boarding and alighting area level. The barrier or supplementary system shall be permitted to be operated manually if an interlock or other design feature prevents the lift from operating unless the barrier or supplementary system is raised or engaged.
Side of lift platform used to enter and exit the vehicle	Moveable barrier or other design feature to prevent the wheels of wheelchairs from rolling off the lift platform when the platform is not at the vehicle floor level
Other sides of lift platform	Barriers 38 mm (1½ inches) high minimum

T302.5.4 Gaps. When the lift platform is at the vehicle floor level and any edge barrier is lowered, the gap between the platform surface and the vehicle floor shall not permit passage of a sphere 16 mm (5/8 inch) in diameter.

T302.5.5 Threshold Ramps. Threshold ramps from boarding and alighting areas to lift platforms and edge barriers used as threshold ramps shall have slopes not steeper than 1:8 (12.5 percent) for a rise of 75 mm (3 inches) maximum. The slope shall be measured when the lift platform is level. Surface discontinuities at transitions from boarding and alighting areas to threshold ramps shall comply with T802.5.

T302.5.6 Visual Contrast. The perimeter of the lift platform surface shall be outlined. The outline shall be 25 mm (1 inch) wide minimum and shall contrast visually with the rest of the platform surface either light-on-dark or dark-on-light.

T302.5.7 Deflection. When occupied, lift platforms shall be permitted to deflect 3 degrees maximum in any direction with respect to the platform's unloaded position, exclusive of vehicle roll or pitch.

T302.5.8 Movement. Lift platform movement shall comply with T302.5.8.

T302.5.8.1 Normal Operating Conditions. When occupied, lift platforms shall move at a rate of 150 mm/second (6 inches/second) maximum, and the horizontal and vertical acceleration shall be 0.3g maximum under normal operating conditions. When folding, retracting, or stowing, lift platforms shall move at a rate of 306 mm/second (12 inches/second) maximum under normal operating conditions, unless the platform is folded and stowed manually.

T302.5.8.2 Power or Equipment Failure. In the event of a power failure or single failure of any load carrying component, lift platforms that are occupied or are stowed in a vertical position shall move at rate of 306 mm/second (12 inches/second) maximum.

T302.5.9 Boarding Direction. Lift platforms shall permit passengers who use wheelchairs to board the platforms facing either toward or away from the vehicle.

Advisory T302.5.9 Boarding Direction. Lift platforms must permit passengers who use wheelchairs to board the platforms facing toward or away from the vehicle because some passengers have significant difficulty backing up their wheelchairs. Transit operators may recommend, but not require, boarding the lift platform in a particular direction.

T302.5.10 Standees. Lift platforms shall be usable by passengers who use walkers, crutches, canes, or braces or who otherwise have difficulty using steps. Lift platforms shall be permitted to be marked to indicate a preferred standing position.

T302.5.11 Handrails. Lifts platforms shall have handrails complying with T804 on two sides of the platform that move in tandem with the platform to provide support for passengers in a standing position. Handrails shall have a usable gripping surface 205 mm (8 inches) long minimum. The gripping surface shall be 760 mm (30 inches) minimum and 965 mm (38 inches) maximum above the lift platform surface. Handrails shall not interfere with the maneuvering of wheelchairs.

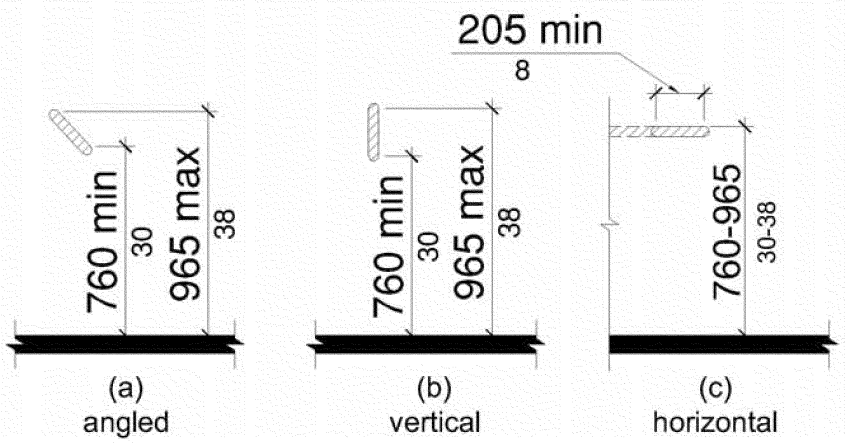

Figure T302.5.11
Handrails

T303 Ramps and Bridgeplates

T303.1 General. Ramps and bridgeplates shall comply with T303. Ramps and bridgeplates shall be permitted to fold or telescope if all the requirements of T303 are met.

T303.2 Design Load. The design load of ramps and bridgeplates 760 mm (30 inches) or more in length shall be 273 kg (600 pounds) minimum. The design load of ramps and bridgeplates less than 760 mm (30 inches) in length shall be 136 kg (300 pounds) minimum. Ramps and bridgeplates shall have a design safety factor of at least 3, based on the ultimate strength of the material.

> **Advisory T303.2 Design Load.** The design load is the weight the ramp or bridgeplate is designed to support without damage or permanent deformation. Some deflection may occur under maximum load.

T303.3 Attachment. When used for boarding and alighting, ramps and bridgeplates shall be firmly attached to the vehicle and shall not be subject to displacement from the vehicle.

T303.4 Emergency Operation. Power operated ramps and bridgeplates shall be capable of being operated manually and in a manner that is safe for the occupant and operator if the power fails.

T303.5 Surfaces. Ramp and bridgeplate surfaces shall comply with T802, and shall be uninterrupted from edge to edge.

> **Advisory T303.5 Surfaces.** Ramp and bridgeplate surfaces must be uninterrupted from edge to edge to accommodate three-wheel scooters. Expanded metal or perforated materials are permitted, as long as the openings comply with T802.3.

T303.6 Clear Width. The ramp and bridgeplate clear width shall be 760 mm (30 inches) minimum.

> **Advisory T303.6 Clear Width.** A wider ramp or bridgeplate is recommended because it is more usable by passengers who use wheelchairs, and accommodates a broader range of passengers with disabilities. The ramp or bridgeplate width should not exceed the clear opening of the doorway, or the clear width of the circulation path connecting the doorway to the wheelchair space.

T303.7 Edge Barriers. The edges of ramps and bridgeplates that are more than 75 mm (3 inches) above the boarding and alighting area level shall have barriers 51 mm (2 inches) high minimum.

T303.8 Slope. Ramp and bridgeplate slopes shall comply with T303.8 when measured at 50 percent passenger load.

> **Advisory T303.8 Slope.** The Department of Transportation regulations at 49 CFR 37.165(f) require vehicle operators to assist passengers with disabilities with the use of boarding devices, even if the vehicle operators must leave their seats. Providing ramps and bridgeplates with the least possible slope accommodates a broader range of passengers with disabilities and minimizes the need for assistance.

T303.8.1 General. Ramps and bridgeplates shall have slopes not steeper than 1:6 (17 percent) when deployed to boarding and alighting areas without station platforms and to the roadway.

T303.8.2 Station Platforms. Ramps and bridgeplates shall have slopes not steeper than 1:8 (12.5 percent) when deployed to station platforms.

T303.9 Transitions. Surface discontinuities at transitions from boarding and alighting areas to ramps and bridgeplates shall comply with T802.5.

T303.10 Visual Contrast. The perimeter of the ramp and bridgeplate surface shall be outlined. The outline shall be 25 mm (1 inch) wide minimum and shall contrast visually with the rest of the ramp and bridgeplate surface either light-on-dark or dark-on-light.

T303.11 Gaps. When deployed for boarding and alighting, gaps between the ramp or bridgeplate surface and vehicle floor shall not permit passage of a sphere more than 16 mm (5/8 inch) in diameter.

T303.12 Stowage. Where portable ramps or bridgeplates are permitted, a compartment, securement system, or other method shall be provided within the vehicle to stow the ramps and bridgeplates when not in use. When stowed in passenger areas, portable ramps and bridgeplates shall not pose a hazard to passengers, and shall not interfere with the maneuvering of wheelchairs.

CHAPTER T4: WHEELCHAIR SPACES AND SECUREMENT SYSTEMS

T401 General. The technical requirements in Chapter T4 shall apply where required by Chapter T2.

T402 Wheelchair Spaces

T402.1 General. Wheelchair spaces shall comply with T402.

T402.2 Surfaces. Wheelchair space surfaces shall comply with T802.

T402.3 Approach. One full unobstructed side of each wheelchair space shall adjoin or overlap a circulation path complying with T502.

T402.4 Size. Wheelchair spaces shall be 760 mm (30 inches) minimum by 1220 mm (48 inches) minimum. Where the wheelchair space is confined on all or part of three sides, additional maneuvering space complying with T402.4.1 or T402.4.2 shall be provided. Fold-down seats shall be permitted to occupy the wheelchair space and additional maneuvering space provided the spaces are not obstructed when the seats are in the up position. Fold-down seats shall be permitted to occupy the additional maneuvering space when the wheelchair space is occupied.

Advisory T402.4 Size. Where wheelchair spaces are confined on all or part of three sides, such as against a side wall and between a fold-up seat and wheel housing, the additional space is needed only for maneuvering the wheelchair into and out of the area.

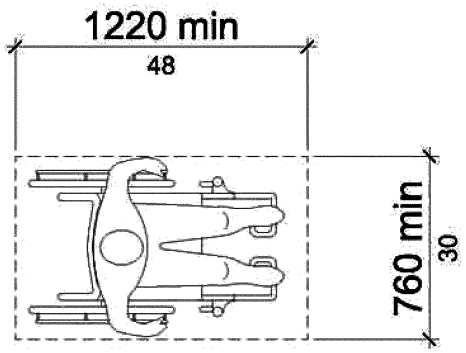

Figure T402.4
Size

T402.4.1 Front or Rear Entry. Where the short side of the wheelchair space is entered from the front or rear and the confined space is more than 610 mm (24 inches) deep, the wheelchair space and additional maneuvering space shall be 787 mm (31 inches) minimum by 1220 mm (48 inches) minimum.

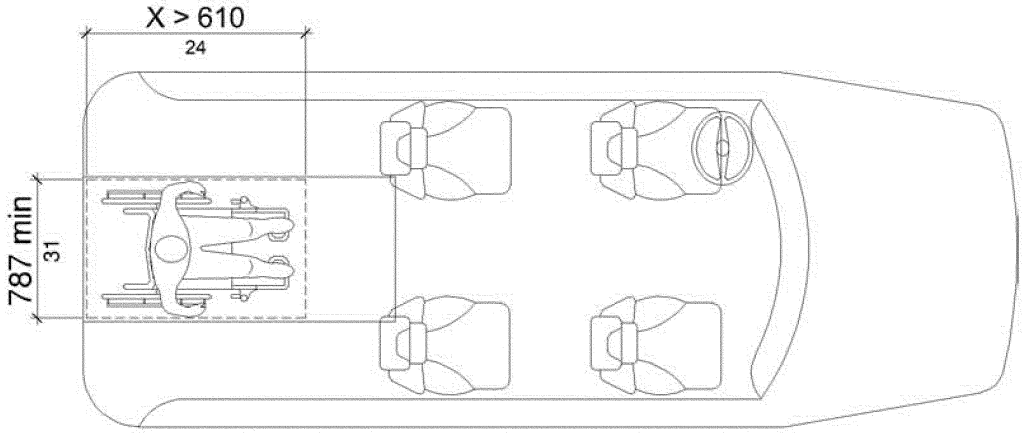

Figure T402.4.1
Front or Rear Entry

T402.4.2 Side Entry. Where the long side of the wheelchair space is entered from the side and the confined space is more than 380 mm (15 inches) deep, the wheelchair space and additional maneuvering space shall be 760 mm (30 inches) minimum by 1372 mm (54 inches) minimum.

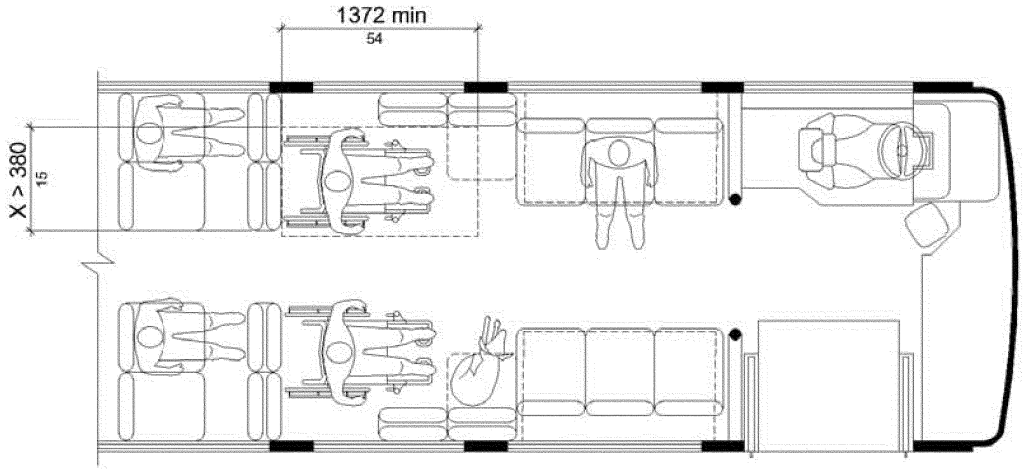

(a) forward facing

Figure T402.4.2
Side Entry

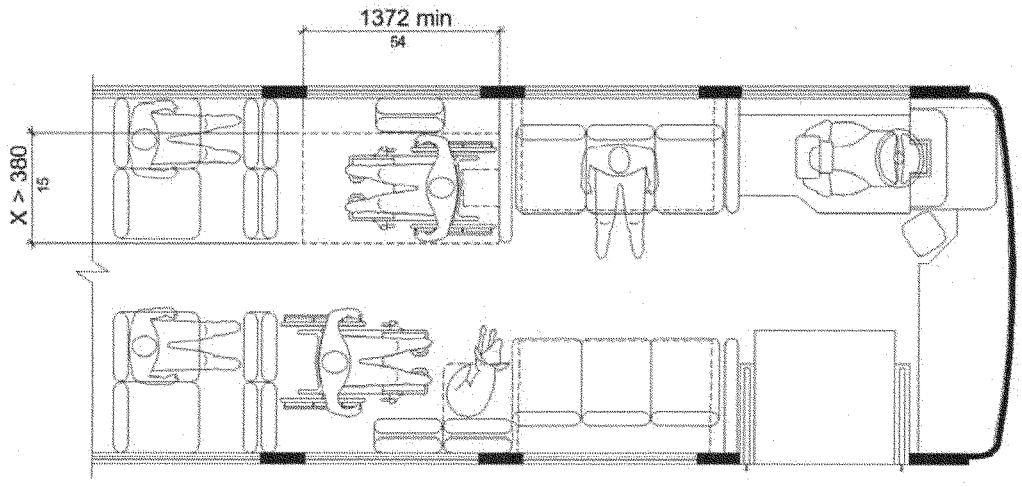

(b) rear facing

Figure T402.4.2
Side Entry

T403 Wheelchair Securement Systems

T403.1 General. Wheelchair securement systems, including attachments, shall comply with T403. Wheelchair securement systems shall be capable of securing wheelchairs that can enter and maneuver within an accessible vehicle. Wheelchair securement systems shall be automatic or easy to operate by a trained person.

T403.2 Orientation. Wheelchair securement systems shall secure the wheelchair so that the occupant faces the front or rear of the vehicle. On vehicles more than 6.7 m (22 feet) in length, at least one wheelchair securement system shall be front facing.

Advisory T403.2 Orientation. Side facing securement is not permitted.

T403.3 Design Force. Front and rear facing wheelchair securement systems shall comply with T403.2.1 or T403.2.2, as applicable.

T403.3.1 Large Vehicles. On vehicles with a gross vehicle weight rating of 13,608 kg (30,000 pounds) or more, wheelchair securement systems shall restrain a force in the forward longitudinal direction of 8,800 N (2,000 pounds) minimum for each wheelchair.

T403.3.2 Small Vehicles. On vehicles with a gross vehicle weight rating of less than 13,608 kg (30,000 pounds), wheelchair securement systems shall restrain a force in the forward longitudinal direction of 22,000 N (5,000 pounds) minimum for each wheelchair.

T403.4 Movement. Front and rear facing wheelchair securement systems shall limit the movement of an occupied wheelchair so that no part of the wheelchair that is in contact with the vehicle floor when initially secured in accordance with manufacturer's instructions moves more than 51 mm (2 inches) in any direction under normal vehicle operating conditions.

Advisory T403.4 Movement. "In any direction" means no part of the wheelchair that is in contact with the vehicle floor when initially secured moves more than 51 mm (2 inches) horizontally, vertically, or in an arc. "Normal vehicle operating conditions" are specific to the area where the vehicle operates. Vehicles that operate in hilly terrain or on winding roads will have more severe constraints than those operating in flat areas.

T403.5 Rear Facing Securement Systems. Rear facing wheelchair securement systems shall comply with T403.5.

T403.5.1 Forward Excursion Barrier. A forward excursion barrier shall be provided to prevent an occupied wheelchair from moving toward the front of the vehicle. The barrier shall extend from the floor to a height of 610 mm (24 in) minimum for the full width of the wheelchair space.

Advisory T403.5.1 Forward Excursion Barrier. The forward excursion barrier is located at the back of the wheelchair.

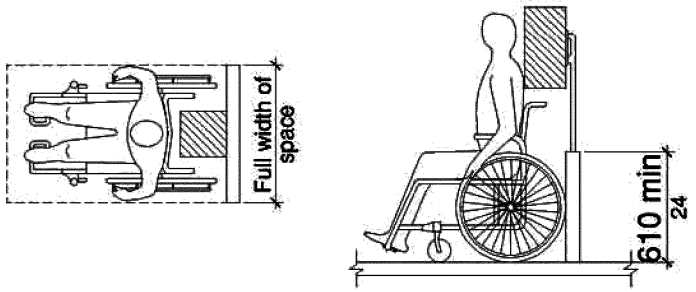

Figure T403.5.1
Forward Excursion Barrier

T403.5.2 Padded Head Rest. A padded head rest complying with T403.5.2 shall be provided above the forward excursion barrier.

Advisory T403.5.2 Padded Head Rest. The padded head rest is intended to reduce the possibility of whiplash in a sudden stop. The padded head rest is positioned approximately in line with the plane of the wheelchair backrest, and the bottom edge of the head rest is positioned to be above the approximate height of the backrest. Many wheelchair users have backpacks on their wheelchairs. If the bottom edge of the padded head rest is below the top of the backrest, the head rest may encounter the backpack and prevent the wheelchair from being positioned close to the head rest.

T403.5.2.1 Width. The padded head rest shall be 255 mm (10 inches) wide minimum, and shall be centered on the wheelchair space.

T403.5.2.2 Height. The lower edge of the padded head rest shall be 965 mm (38 inches) minimum and 1016 mm (40 inches) maximum above the vehicle floor. The top edge of the padded head rest shall be 1420 mm (56 inches) minimum above the vehicle floor.

T403.5.2.3 Protrusion. The plane of the face of the padded head rest shall protrude into the wheelchair space 230 mm (9 inches) minimum and 305 mm (12 inches) maximum measured from the plane of the forward excursion barrier.

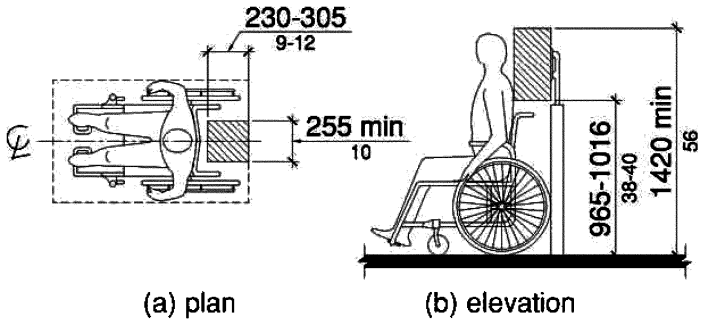

Figure 403.5.2
Padded Head Rest

T403.6 Stowage. When wheelchair securement systems are not in use, the systems shall not protrude into the wheelchair space except as provided in T403.5.2.3, and shall not interfere with passenger movement or pose a hazard. Wheelchair securement systems shall be reasonably protected from vandalism, and shall be readily accessed when needed for use.

T404 Seat Belts and Shoulder Belts. Seat belts and shoulder belts provided for passengers who use wheelchairs shall comply with 49 CFR § 571.209. Seat belts and shoulder belts shall not be used in place of wheelchair securement systems complying with T403 to secure wheelchairs to vehicles.

CHAPTER T5: CIRCULATION PATHS AND DOORWAYS ON BUSES, OVER-THE-ROAD BUSES, AND VANS

T501 General. The technical requirements in Chapter T5 shall apply where required by Chapter T2.

T502 Circulation Paths

T502.1 General. Circulation paths connecting wheelchair spaces to doorways shall comply with T502.

T502.2 Clear Width. The clear width of circulation paths connecting wheelchair spaces to doorways shall be 865 mm (34 inches) minimum from the vehicle floor to a height 1015 mm (40 inches) minimum above the vehicle floor. From a height 1015 mm (40 inches) minimum above the vehicle floor, the clear width of circulation paths shall be 760 mm (30 inches) minimum to the height specified in Table T502.

Table T502.2 Circulation Path Clear Width

Vehicle Length	Minimum Height Above 1015 mm (40 inches)
Vehicles 6.7 m (22 feet) or less	1420 mm (56 inches) above vehicle floor
Over-the-road buses	1650 mm (65 inches) above vehicle floor
Other vehicles more than 6.7 m (22 feet)	1725 mm (68 inches) above vehicle floor

Advisory T502.2 Clear Width. Using a 3D model or other computer design tool that depicts an occupied wheelchair moving from the vehicle doorway to the wheelchair space will help to ensure that the clear width of the circulation path complies with T502.2.

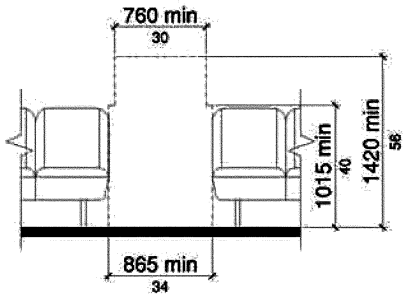

(a) vehicles 6.7 m or less

Figure T502.2
Clear Width

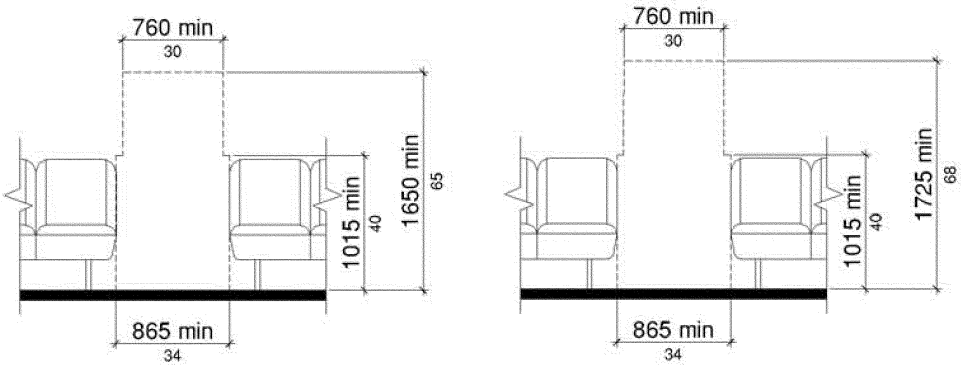

(b) over-the-road bus (c) other vehicles more than 6.7 m

Figure T502.2
Clear Width

T502.3 Features on Circulation Paths. Features on circulation paths connecting wheelchair spaces to doorways shall be located so as to not interfere with the maneuvering of wheelchairs. Stanchions located directly behind the driver seat shall terminate at the surface of aisle facing seats where provided, or shall be turned away from the circulation path below the driver seat. Where provided on vehicles, fare collection devices shall be located as close to the dashboard as possible.

T503 Doorways

T503.1 Doorways with Lifts or Ramps. The vertical clearance at doorways with lifts or ramps shall be in accordance with Table T503.1 measured vertically from the top of the door opening to the vehicle floor, or to the surface of the lift or to the highest point of the ramp when deployed to the vehicle floor level.

Table T503.1 Vertical Clearance at Doorways with Lifts or Ramps

Vehicle Length	Minimum Vertical Clearance
Vehicles 6.7 m (22 feet) or less	1420 mm (56 inches)
Over-the-road buses	1650 mm (65 inches)
Other vehicles more than 6.7 m (22 feet)	1725 mm (68 inches)

T503.2 Doorways with Level Entry Boarding. Doorways with level entry boarding shall comply with T503.2.

T503.2.1 Clear Width. Doorways shall provide a clear opening of 810 mm (32 inches) minimum.

T503.2.2 Thresholds. Thresholds at doorways shall be marked by a strip. The strip shall be 25 mm (1 inch) wide minimum and shall contrast visually with the rest of the circulation path surface either light-on-dark or dark-on-light.

T503.3 Doorways on Over-the-Road Buses. On over-the road buses, doorways with steps shall provide a clear opening 760 mm (30 inches) minimum from the lowest step tread to a height 1220 mm (48 inches) above the lowest step tread. Where compliance is not structurally feasible, the clear opening shall be permitted to be 685 mm (27 inches). The clear opening shall be permitted to taper to 457 mm (18 inches) minimum from a height 1220 mm (48 inches) above the lowest step tread to the top of the doorway. Hinges and other door mechanisms shall be permitted to protrude 100 mm (4 inches) maximum into the clear opening.

T504 Steps

T504.1 General. Steps shall comply with T504.

T504.2 Surfaces. Step tread surfaces shall comply with T802.

T504.3 Visual Contrast. The outer edge of step treads shall be marked by a strip. The strip shall be 25 mm (1 inch) wide minimum and shall contrast visually with the rest of the step tread or circulation path surface either light-on-dark or dark-on-light.

T505 Handrails, Stanchions, and Handholds

T505.1 General. Handrails, stanchions, and handholds shall comply with T505 and T804.

T505.2 Doorways. Handrails and stanchions at passenger doorways shall be configured so that passengers with disabilities can grasp the handrails and stanchions from outside the vehicle, and use the handrails and stanchions throughout the boarding and alighting process.

T505.3 Fare Collection Devices. Handrails at fare collection devices shall be configured so that passengers with disabilities can use the handrail for support when using the fare collection device.

T505.4 Circulation Paths. Handrails and stanchions along circulation paths shall be configured so that passengers with disabilities can use the handrails when moving through the vehicle.

T505.5 Seats. Handholds and stanchions on the backs of forward and rear facing seats shall be located directly adjacent to the aisle so that passengers with disabilities can use the handholds and handrails when moving from the aisles to the seats.

CHAPTER T6: CIRCULATION PATHS AND DOORWAYS ON RAIL VEHICLES [Reserved]

CHAPTER T7: COMMUNICATION FEATURES

T701 General. The technical requirements in Chapter T7 shall apply where required by Chapter T2.

T702 Signs

T702.1 General. Characters on signs shall comply with T702.

T702.2 Character Proportions. Characters shall be selected from fonts where the width of the uppercase letter "O" is 55 percent minimum and 110 percent maximum of the height of the uppercase letter "I".

T702.3 Character Height. Character height shall comply with Table T702.3. Character height shall be based on the uppercase letter "I".

Table T702.3 Character Height

Sign	Minimum Character Height
Exterior route or destination signs on boarding side of vehicle	51 mm (2 inches)
Exterior route or destination signs on front of vehicle	100 mm (4 inches)
Interior signs designating wheelchair spaces or priority seats, where baseline of character is 1015 mm (40 inches) to 1780 mm (70 inches) above the vehicle floor	16 mm (5/8 inch)
Interior signs designating wheelchair spaces, priority seats, stop announcements, or stop requests where baseline of character is more than 1780 mm (70 inches) above the vehicle floor	51 mm (2 inches)

T702.4 Stroke Thickness. Stroke thickness of the uppercase letter "I" shall be 10 percent minimum and 30 percent maximum of the height of the character.

T702.5 Character Spacing. Character spacing shall be measured between the two closest points of adjacent characters, excluding word spaces. Spacing between individual characters shall be 10 percent minimum and 35 percent maximum of character height.

T702.6 Line Spacing. Spacing between the baselines of separate lines of characters within a message shall be 135 percent minimum and 170 percent maximum of the character height.

T702.7 Contrast. Characters shall contrast with their background with either light characters on a dark background or dark characters on a light background.

T703 International Symbol of Accessibility. The International Symbol of Accessibility shall comply with Figure T703. The symbol shall have a background field height of 100 mm (4 inches) minimum. The symbol and its background shall have a non-glare finish. The symbol shall contrast with its background with either a light symbol on a dark background or a dark symbol on a light background.



Figure T703
International Symbol of Accessibility

T704 Automated Stop and Route Announcements

T704.1 General. Automated stop and route announcements shall comply with T704, and shall use recorded or digitized human speech.

T704.2 Automated Stop Announcements. Automated stop announcements shall be audible and visible within the vehicle. Visible announcements shall be a sign complying with T702 at the front of the vehicle. Where rear facing wheelchair securement systems are provided, an additional sign complying with T702 shall be located within view of passengers facing the rear of the vehicle.

T704.3 Automated Route Announcements. Automated route announcements shall be audible at boarding and alighting areas.

T705 Stop Request Systems

T705.1 General. Stop request systems shall provide audible and visible indicators when passengers request a vehicle to stop at designated stops on the vehicle's assigned route. Audible indicators shall be verbal or non-verbal signals, and shall sound only once for each stop. Visible indicators shall be a light or sign complying with T702 at the front of the vehicle, and shall extinguish when the vehicle door opens at a stop.

T705.2 Operation. Stop request systems shall be operable at each wheelchair space and at priority seats for passengers with disabilities. Operable parts shall comply with T805. At wheelchair spaces, operable parts shall be located on a side wall or partition 610 mm (24 inches) minimum and 915 mm (36 inches) maximum from the side of the wheelchair space facing the back of a wheelchair secured in the wheelchair space.

CHAPTER T8: OTHER FEATURES

T801 General. The technical requirements in Chapter T8 shall apply where required by Chapter T2 or where referenced by a requirement in this document.

T802 Surfaces

T802.1 General. Surfaces shall comply with T802.

> **Advisory T802.1 Surfaces.** The technical requirements for surfaces in T802 apply to circulation paths (T203.4.1), lift platforms (T302.5.1), ramps and bridgeplates (T303.5), wheelchair spaces (T402.2), and step treads (T504.2).

T802.2 Slip Resistant. Surfaces shall be slip resistant.

T802.3 Openings. Openings in surfaces shall not allow the passage of a sphere more than 16 mm (5/8 inch) diameter. Elongated openings shall be placed so that the long dimension is perpendicular to dominant direction of travel. Lift platforms that are folded and stowed manually, and ramps and bridgeplates that are deployed manually shall be permitted to have a cut-out in the surface 38 mm (1½ inches) maximum by 115 mm (4½ inches) maximum for the operator to grasp the surface.

T802.4 Protrusions. Protrusions on surfaces shall be permitted to be 6.4 mm (¼ inch) high maximum.

T802.5 Surface Discontinuities. Surface discontinuities shall be 6.4 mm (¼ inch) high maximum without edge treatment and 13 mm (½ inch) high maximum with beveled edge treatment. The bevel shall have a slope not steeper than 1:2 (50 percent) applied across the entire surface discontinuity.

> **Advisory T802.5 Surface Discontinuities.** Two adjacent surfaces can have discontinuities up to 13 mm (½ inch). If the surface discontinuity is over 6.4 mm (¼ inch), a bevel with a maximum slope of 1:2 (50 percent) is required, and the bevel must blend the entire surface discontinuity with no lip.

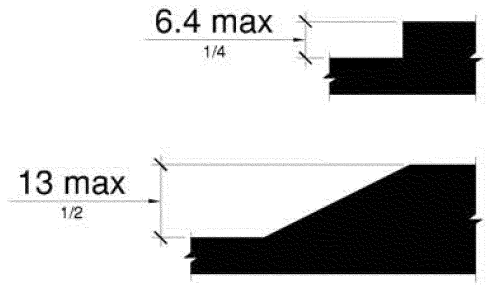

Figure T802.5
Surface Discontinuities

T803 Doorway Lighting. Lighting at doorways shall comply with Table T803. Lighting shall not shine directly in the eyes of passengers when entering and exiting doorways.

Table T803 Areas Illuminated and Illuminance Levels

Vehicles	Areas Illuminated	Illuminance Levels
Buses Over-the-Road Buses Vans	Lift platforms	When lift is raised or lowered between the vehicle floor and the boarding and alighting area or roadway, 55 lux (5 foot-candles) illuminance on all portions of the lift platform surface throughout the lift cycle When lift is at the boarding and alighting area or roadway level, 11 lux (1 foot-candle) of illuminance on the surface of the threshold ramp
Buses Over-the-Road Buses Vans	Ramps Bridgeplates	When ramp or bridgeplate is deployed to the boarding or alighting area or roadway, 22 lux (2 foot-candles) of illuminance on all portions of the ramp or bridgeplate surface
Buses Over-the-Road Buses Vans	Steps at doorways adjacent to the driver	When doors are open, 22 lux (2 foot-candles) of illuminance on step tread surfaces
Buses Over-the-Road Buses Vans	Steps at doorways not adjacent to the driver	At all times, 22 lux (2 foot-candles) of illuminance on step tread surfaces
Buses Over-the-Road Buses Vans	Boarding and alighting areas adjacent to doorways	When doors are open, 11 lux (1 foot-candle) of illuminance measured at points on boarding and alighting area surfaces 915 mm (36 inches) perpendicular from the outer edge of the bottom step tread or the doorway threshold

T804 Additional Requirements for Handrails, Stanchions, and Handholds

T804.1 General. Handrails, stanchions, and handholds shall comply with T804.

T804.2 Edges. Edges shall be rounded.

T804.3 Cross Section. Gripping surfaces shall have a cross section complying with T804.3.1 or T804.3.2.

T804.3.1 Circular Cross Section. Gripping surfaces with a circular cross section shall have an outside diameter of 32 mm (1¼ inches) minimum and 51 mm (2 inches) maximum.

T804.3.2 Non-Circular Cross Section. Gripping surfaces with a non-circular cross section shall have a perimeter dimension of 100 mm (4 inches) minimum and 160 mm (6¼ inches) maximum, and a cross section dimension of 57 mm (2¼ inches) maximum.

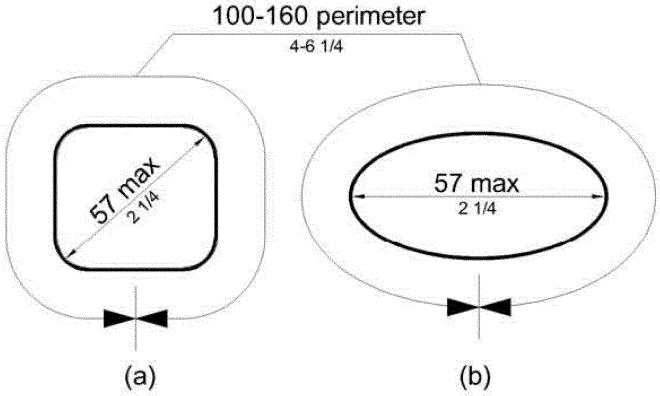

Figure T804.3.2
Non-Circular Cross Section

T804.4 Clearance. Clearance between gripping surfaces and adjacent surfaces shall be 38 mm (1½ inches) minimum.

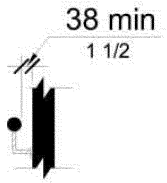

Figure T804.4
Clearance

T804.5 Structural Strength. Handrails on lift platform surfaces shall be capable of withstanding a force of 445 N (100 pounds) applied at any point on the handrail without permanent deformation of the handrail or supporting structure.

T805 Operable Parts

T805.1 General. Operable parts shall comply with T805.

T805.2 Height. Operable parts shall be located 610 mm (24 inches) minimum and 1220 mm (48 inches) maximum above the vehicle floor.

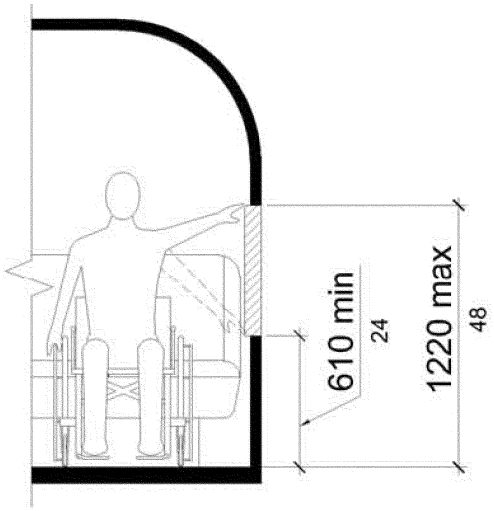

Figure T805.2
Height

T805.3 Operation. Operable parts shall be operable with one hand and shall not require tight grasp pinching, or twisting of the wrist. The force required to activate operable parts shall be 22.2 N (5 lb) maximum.

T806 Fare Collection Devices. Operable parts of fare collection devices shall comply with T805. operable parts shall be located so that a wheelchair can approach within 255 mm (10 inches) maxin

Advisory T806 Fare Collection Devices. Fare collection devices that incorporate smart card technology are easier for passengers with disabilities to use.

[FR Doc. 2010–18255 Filed 7–23–10; 8:45 am]
BILLING CODE 8150–01–C

Federal Register

Monday,
July 26, 2010

Part V

The President

Memorandum of July 21, 2010—Delegation of Certain Functions Under Section 3134 of the National Defense Authorization Act for Fiscal Year 2008 (Public Law 110–181)

Memorandum of July 21, 2010—Delegation of Certain Functions and Authorities

Memorandum of July 21, 2010—Delegation of Certain Functions Under Section 1264 of the Victims of Iranian Censorship Act (Public Law 111–84, Subtitle D of the National Defense Authorization Act for Fiscal Year 2010)

Federal Register
Vol. 75, No. 142
Monday, July 26, 2010

Presidential Documents

Title 3—

The President

Memorandum of July 21, 2010

Delegation of Certain Functions Under Section 3134 of the National Defense Authorization Act for Fiscal Year 2008 (Public Law 110–181)

Memorandum for the Secretary of Energy

By the authority vested in me as President by the Constitution and the laws of the United States, including section 301 of title 3, United States Code, I hereby delegate to you the functions conferred upon the President by section 3134 of the National Defense Authorization Act for Fiscal Year 2008 (Public Law 110–181), to make the specified report to the Congress.

You are authorized and directed to publish this memorandum in the *Federal Register*.



THE WHITE HOUSE,
Washington, July 21, 2010

[FR Doc. 2010–18441
Filed 7–23–10; 11:15 am]
Billing code 6450–01–P

Presidential Documents

Memorandum of July 21, 2010

Delegation of Certain Functions and Authorities

Memorandum for the Secretary of State

By the authority vested in me as President by the Constitution and the laws of the United States, including section 301 of title 3, United States Code, I hereby delegate to you the following functions and authorities:

- The function to make the specified reports to the Congress under 22 U.S.C. 2291–4(c).
- The function and authority to waive the provisions of section 1003 of Public Law 100–204 (22 U.S.C. 5202) upon making certain determinations and certifications under section 7034(b) of the Consolidated Appropriations Act, 2010 (Public Law 111–117) and any subsequently enacted provision of law that is the same or substantially the same.

You are authorized and directed to publish this memorandum in the *Federal Register*.



THE WHITE HOUSE,
Washington, July 21, 2010

[FR Doc. 2010–18448
Filed 7–23–10; 11:15 am]
Billing code 4710–10–P

Presidential Documents

Memorandum of July 21, 2010

Delegation of Certain Functions Under Section 1264 of the Victims of Iranian Censorship Act (Public Law 111–84, Subtitle D of the National Defense Authorization Act for Fiscal Year 2010)

Memorandum for the Chairman of the Broadcasting Board of Governors [and] the Secretary of State

By the authority vested in me as President by the Constitution and the laws of the United States, including section 301 of title 3, United States Code, I hereby delegate to the Chairman of the Broadcasting Board of Governors, in coordination with the Secretary of State, the functions conferred upon the President by section 1264 of the Victims of Iranian Censorship Act (Public Law 111–84, subtitle D) to make the specified report to the Congress.

The Chairman of the Broadcasting Board of Governors is authorized and directed to publish this memorandum in the *Federal Register*.



THE WHITE HOUSE,
Washington, July 21, 2010

[FR Doc. 2010–18450
Filed 7–23–10; 11:15 am]
Billing code 8610–01–P

Reader Aids

Federal Register

Vol. 75, No. 142

Monday, July 26, 2010

CUSTOMER SERVICE AND INFORMATION

Federal Register/Code of Federal Regulations	
General Information, indexes and other finding aids	**202–741–6000**
Laws	**741–6000**
Presidential Documents	
Executive orders and proclamations	**741–6000**
The United States Government Manual	**741–6000**
Other Services	
Electronic and on-line services (voice)	**741–6020**
Privacy Act Compilation	**741–6064**
Public Laws Update Service (numbers, dates, etc.)	**741–6043**
TTY for the deaf-and-hard-of-hearing	**741–6086**

ELECTRONIC RESEARCH

World Wide Web

Full text of the daily Federal Register, CFR and other publications is located at: **http://www.gpoaccess.gov/nara/index.html**

Federal Register information and research tools, including Public Inspection List, indexes, and links to GPO Access are located at: **http://www.archives.gov/federal__register**

E-mail

FEDREGTOC-L (Federal Register Table of Contents LISTSERV) is an open e-mail service that provides subscribers with a digital form of the Federal Register Table of Contents. The digital form of the Federal Register Table of Contents includes HTML and PDF links to the full text of each document.

To join or leave, go to **http://listserv.access.gpo.gov** and select *Online mailing list archives, FEDREGTOC-L, Join or leave the list (or change settings);* then follow the instructions.

PENS (Public Law Electronic Notification Service) is an e-mail service that notifies subscribers of recently enacted laws.

To subscribe, go to **http://listserv.gsa.gov/archives/publaws-l.html** and select *Join or leave the list (or change settings);* then follow the instructions.

FEDREGTOC-L and **PENS** are mailing lists only. We cannot respond to specific inquiries.

Reference questions. Send questions and comments about the Federal Register system to: **fedreg.info@nara.gov**

The Federal Register staff cannot interpret specific documents or regulations.

Reminders. Effective January 1, 2009, the Reminders, including Rules Going Into Effect and Comments Due Next Week, no longer appear in the Reader Aids section of the Federal Register. This information can be found online at **http://www.regulations.gov.**

CFR Checklist. Effective January 1, 2009, the CFR Checklist no longer appears in the Federal Register. This information can be found online at **http://bookstore.gpo.gov/.**

FEDERAL REGISTER PAGES AND DATE, JULY

37975–38390 1
38391–38692 2
38693–38914 6
38915–39132 7
39133–39442 8
39443–39628 9
39629–39786 12
39787–40718 13
40719–41072 14
41073–41364 15
41365–41690 16
41691–41962 19
41963–42278 20
42279–42570 21
42571–43030 22
43031–43394 23
43395–43798 26

CFR PARTS AFFECTED DURING JULY

At the end of each month, the Office of the Federal Register publishes separately a List of CFR Sections Affected (LSA), which lists parts and sections affected by documents published since the revision date of each title.

2 CFR

Ch. 58 41691
902 39443
3186 39133

3 CFR

Proclamations:
8539 38905
8540 38911
8541 42279

Executive Orders:
13546 39439
13366 (revoked by 13547) 43023
13547 43023

Administrative Orders:
Memorandums:
Memorandum of June 28, 2010 38387
Memorandum of June 30, 2010 38913
Memorandum of July 13, 2010 41687
Memorandum of July 19, 2010 43029
Memorandum of July 21, 2010 43793
Memorandum of July 21, 2010 43795
Memorandum of July 21, 2010 43797
Notices:
Notice of June 19, 2010 42281

5 CFR

2425 42283
2429 42283
4401 42270

Proposed Rules:
532 39460

6 CFR

Proposed Rules:
5 39144

7 CFR

2 43366
63 43031
205 38693
301 41073
760 41365
800 41693
916 38696
917 38696
920 43038
924 43039
946 43042
948 38698
983 43045
1413 41963
1430 41365
1455 39135
1720 42571
4280 41695

Proposed Rules:
701 41389
1755 38042
1221 41392
1429 41397

8 CFR

274a 42575

9 CFR

102 40719
103 40719
104 40719
108 40719
112 40719
113 40719
114 40719
116 40719
124 40719

10 CFR

9 41368
72 ..... 41369, 42292
430 42579
431 37975
607 39443
1703 39629

Proposed Rules:
30 43425
37 40756
40 43425
70 43425
72 ..... 41404, 42339
73 42000
170 43425
171 43425
217 41405
430 ..... 41102, 42611, 42612
431 ..... 41102, 41103
1023 38042

11 CFR

9004 43395

12 CFR

Proposed Rules:
615 39392
1237 39462
1777 39462

14 CFR

13 41968
25 38391
39 ..... 37990, 37991, 37994, 37997, 38001, 38007, 38009, 38011, 38014, 38017, 38019, 38394, 38397, 38404, 39143, 39787, 39790, 39795, 39798, 39801, 39803, 39804, 39811,

39814, 39818, 42585, 42589, 42592, 43049, 43395, 43397
47 41968
71 ..... 38406, 39145, 39146, 39147, 39148, 39149, 40719, 41074, 41075, 41076, 41077, 41983, 41984, 41985
73 ..... 42598, 43398, 43399
77 42296
91 ..... 41968, 41986
97 ..... 39150, 39152, 42308, 42310
121 39629
217 41580
234 ..... 41580, 42599
241 41580
248 41580
250 41580
291 41580
298 41580
385 41580

Proposed Rules:
39 ..... 38052, 38056, 38058, 38061, 38064, 38066, 38941, 38943, 38945, 38947, 38950, 38953, 38956, 39185, 39189, 39192, 39472, 39863, 39869, 40757, 41104, 42340, 43092, 43095, 43097, 43099, 43101, 43103, 43105
71 ..... 38753, 41772, 41773, 41774, 42012, 42014, 42630, 42631
91 ..... 39196, 42015

15 CFR

742 41078
774 41078

Proposed Rules:
922 40759

16 CFR

305 41696
1611 42311
1630 42315
1631 42315

Proposed Rules:
1218 42017
1219 43308
1220 43308
1500 43308
1508 43107
1509 43107

17 CFR

200 ..... 42270, 42599
275 41018

Proposed Rules:
16 41775
38 42633
39 42633
40 42633
240 42984
242 39626
270 42984
274 42984
275 42984

18 CFR

2 43400
3b 43400
4 43400
5 43400
8 43400
9 43400
11 43400
16 43400
24 43400
32 43400
33 43400
34 43400
35 43400
38 43059
39 43400
40 43059
45 43400
46 43400
152 43400
153 43400
156 43400
157 43400
385 43400
388 43400

Proposed Rules:
410 41106

20 CFR

404 39154
416 39154
418 41084

Proposed Rules:
404 42639
416 42639

21 CFR

522 38699
573 41725
814 41986
1310 38915

23 CFR

669 43405
772 39820

Proposed Rules:
650 42643

24 CFR

5 41087
84 41087
85 41087

Proposed Rules:
3280 39871

26 CFR

1 38700
53 38700
54 ..... 38700, 41726, 43330
301 38700
602 ..... 38700, 43330

Proposed Rules:
54 ..... 41787, 43109
300 43110

27 CFR

9 42601
40 42605
41 42605
44 42605
46 42605
71 42605

Proposed Rules:
9 43446
40 42659
41 42659
44 42659
45 42659
46 42659

28 CFR

Proposed Rules:
35 ..... 43446, 43452, 43460
36 ..... 43452, 43460, 43467

29 CFR

2201 41370
2550 41600
2590 ..... 41726, 43330
4022 41091

Proposed Rules:
1910 38646
1915 38646
1917 38646
1918 38646
1926 38646
1928 38646
4003 42662
4903 42662

30 CFR

Proposed Rules:
926 43476

31 CFR

Ch. V 38212

Proposed Rules:
103 41788

33 CFR

100 ..... 38408, 38710, 39161, 39445, 39448, 41373, 41987
117 ..... 38411, 38412, 38712
165 ..... 38019, 38021, 38412, 38415, 38714, 38716, 38718, 38721, 38723, 38923, 38926, 39163, 39166, 39632, 39839, 40726, 41376, 41762, 41764, 41987, 42608

Proposed Rules:
100 ..... 41119, 41789
165 ..... 38754, 39197

34 CFR

Proposed Rules:
600 42190
668 ..... 42190, 43616
682 42190

36 CFR

7 39168

Proposed Rules:
1192 43748

37 CFR

Proposed Rules:
386 39891

38 CFR

3 ..... 39843, 41092

39 CFR

111 41989
3050 38725
3055 38725

Proposed Rules:
20 39475
111 ..... 39477, 41790
3050 39200
3055 38757

40 CFR

52 ..... 38023, 38745, 39366, 39633, 39635, 40726, 41312, 43062, 43066
63 41991
81 ..... 39635, 41379, 43069
98 39736
180 ..... 38417, 39450, 39455, 40729, 40736, 40741, 40745, 40751, 42318, 42324, 43072, 43076
271 43409
300 43082
355 39852
370 39852
721 42330

Proposed Rules:
2 39094
52 ..... 38757, 40760, 40762, 42018, 42342, 42346, 42672, 43114
60 42676
63 ..... 42030, 42676
80 42238
81 ..... 41421, 42018, 43114
122 38068
123 38068
141 40926
142 40926
152 38958
191 41421
194 41421
257 41121
261 41121
264 41121
265 41121
268 41121
271 ..... 41121, 43478
300 ..... 42361, 43115
302 41121
403 38068
501 38068
503 38068
745 38959

41 CFR

102-5 41994

Proposed Rules:
60-741 43116
102-38 40763

42 CFR

423 38026
447 38748
457 38748

Proposed Rules:
50 42362
73 42363
405 40040
409 ..... 40040, 43236
410 40040
411 40040
413 40040
414 40040
415 40040
418 43236
424 ..... 40040, 43236
484 43236
488 39641
489 43236

44 CFR

64 38749
67 43418

Proposed Rules:
67 43479

45 CFR

147 ..... 41726, 43330
301 38612
302 38612
303 38612

305.....38612
308.....38612
614.....40754
1186.....39133
Proposed Rules:
94.....42362
160.....40868
164.....40868

47 CFR

1.....41932
24.....43088
27.....43088
64.....39859
73 .....41092, 41093, 41932
90.....41381
95.....43423
101.....41932
Proposed Rules:
1.....38959, 41338
22.....38959
24.....38959
27.....38959
73.....41123
90.....38959
101.....38959

48 CFR

Ch. I.....38674, 38691, 39414, 39420
2.....38675, 38683
4 .....38675, 38683, 38684, 39414
7.....38683
10.....38683
12.....39414
13.....38683
15.....38675
18.....38683
19.....38687
22.....38689
25.....38689
26.....38683
31.....38675
32.....38675
42.....38675, 39414
45.....38675
52 .....38675, 38683, 38684, 38689, 39414, 43090
205.....40714
210.....40714
212.....40712
216.....40716
232.....40712
252.....40712, 40717
516.....41093
552.....41093
3002.....41097
3007.....41097
3009.....41097
3016.....41097
3034.....41097
3035.....41097
3052.....41097
Proposed Rules:
901.....38042
902.....38042
903.....38042
904.....38042
906.....38042
907.....38042
908.....38042
909.....38042
911.....38042
914.....38042
915.....38042
916.....38042
917.....38042
952.....38042

49 CFR

39.....38878
40.....38422
213.....41282
237.....41282
387.....38423
Proposed Rules:
171.....42364
173.....42364
231.....38432
395.....40765
611.....39492

50 CFR

17.....42490
622.....39638
635.....41995
648 .....38935, 39170, 41996, 43090
660 .....38030, 39178, 41383, 42610
679 .....38430, 38936, 38937, 38938, 38939, 38940, 39183, 39638, 39639, 39861, 41999, 42336, 42337, 42338, 43090
Proposed Rules:
16.....38069
17 .....38441, 42033, 42040, 42054, 42059
216.....38070
300.....38758
679 .....38452, 38454, 39892, 41123, 41424, 43118
680.....39892

LIST OF PUBLIC LAWS

This is a continuing list of public bills from the current session of Congress which have become Federal laws. It may be used in conjunction with ''P L U S'' (Public Laws Update Service) on 202–741–6043. This list is also available online at *http://www.archives.gov/federal-register/laws.html*.

The text of laws is not published in the **Federal Register** but may be ordered in ''slip law'' (individual pamphlet) form from the Superintendent of Documents, U.S. Government Printing Office, Washington, DC 20402 (phone, 202–512–1808). The text will also be made available on the Internet from GPO Access at *http://www.gpoaccess.gov/plaws/index.html*. Some laws may not yet be available.

H.R. 4173/P.L. 111–203

Dodd-Frank Wall Street Reform and Consumer Protection Act (July 21, 2010; 124 Stat. 1376)

S. 1508/P.L. 111–204
Improper Payments Elimination and Recovery Act of 2010 (July 22, 2010; 124 Stat. 2224)

H.R. 4213/P.L. 111–205
Unemployment Compensation Extension Act of 2010 (July 22, 2010; 124 Stat. 2236)

Last List July 16, 2010

Public Laws Electronic Notification Service (PENS)

PENS is a free electronic mail notification service of newly enacted public laws. To subscribe, go to *http://listserv.gsa.gov/archives/publaws-l.html*

Note: This service is strictly for E-mail notification of new laws. The text of laws is not available through this service. **PENS** cannot respond to specific inquiries sent to this address.