Federal Register

Monday,
July 26, 2010

Part IV

Architectural and Transportation Barriers Compliance Board

36 CFR Parts 1192

Americans With Disabilities Act (ADA) Accessibility Guidelines for Transportation Vehicles; Proposed Rule

ARCHITECTURAL AND TRANSPORTATION BARRIERS COMPLIANCE BOARD

36 CFR Part 1192

[Docket No. ATBCB 2010–0004]

RIN 3014–AA38

Americans With Disabilities Act (ADA) Accessibility Guidelines for Transportation Vehicles

AGENCY: Architectural and Transportation Barriers Compliance Board.

ACTION: Notice of proposed rulemaking.

SUMMARY: The Architectural and Transportation Barriers Compliance Board (Access Board) is proposing to revise and update its accessibility guidelines for buses, over-the-road buses, and vans. The guidelines ensure that transportation vehicles are readily accessible to and usable by individuals with disabilities. The guidelines apply to the acquisition of new, used, and remanufactured transportation vehicles, and the remanufacture of existing transportation vehicles to the extent required by regulations issued by the Department of Transportation pursuant to the Americans with Disabilities Act. The guidelines for transportation vehicles operated in fixed guideway systems (*e.g.,* rapid rail, light rail, commuter rail, and intercity rail) will be revised and updated at a future date.

DATES: Comments must be received by November 23, 2010.

ADDRESSES: You may submit comments, identified by docket number ATBCB 2010–0004 or RIN number 3014–AA38, by any of the following methods:

- *Federal eRulemaking Portal: http://www.regulations.gov.* Follow the instructions for submitting comments.
- *E-mail: pecht@access-board.gov.* Include docket number ATBCB 2010–0004 or RIN number 3014–AA38 in the subject line of the message.
- *Fax:* 202–272–0081.
- *Mail or Hand Delivery/Courier:* Office of Technical and Informational Services, Access Board, 1331 F Street, NW., suite 1000, Washington, DC 20004–1111.

All comments received will be posted without change to *http://www.regulations.gov*, including any personal information provided.

FOR FURTHER INFORMATION CONTACT: Jim Pecht, Architectural and Transportation Barriers Compliance Board, 1331 F Street, NW., suite 1000, Washington, DC 20004–1111. Telephone (202) 272–0021. E-mail *pecht@access-board.gov.*

SUPPLEMENTARY INFORMATION:

Background

Americans With Disabilities Act

The Americans with Disabilities Act (ADA) prohibits discrimination on the basis of disability in the provision of transportation services by public and private entities. 42 U.S.C. 12101 *et seq.* The ADA sets out different responsibilities for the Architectural and Transportation Barriers Compliance Board (Access Board) and the Department of Transportation with respect to implementing the statute.

The ADA requires the Access Board to issue guidelines for transportation vehicles that are readily accessible to and usable by individuals with disabilities. 42 U.S.C. 12204. These guidelines, by themselves, are not legally enforceable and do not require existing transportation vehicles to be retrofitted.[1]

The ADA requires the Department of Transportation to issue regulations that specify:

- Which public and private entities must comply with the transportation provisions of the ADA;
- When transportation vehicles acquired or remanufactured (*i.e.,* structurally restored and new or rebuilt major components installed to extend the vehicle's service life) by the public or private entities must be accessible; and
- What accessibility standards the transportation vehicles must meet. 42 U.S.C. 12149, 12164, and 12186(a).

The ADA requires the accessibility standards for transportation vehicles included in the Department of Transportation's regulations to be consistent with the guidelines issued by the Access Board. 42 U.S.C. 12149, 12163, 12186(c). The Department of Transportation's regulations are legally enforceable.

Prior Rulemaking

The Access Board issued accessibility guidelines for transportation vehicles in 1991 and amended the guidelines in 1998 to include additional requirements for over-the-road buses (i.e., buses characterized by an elevated passenger deck located over a baggage compartment). 56 FR 45530, September 6, 1991; 63 FR 51694, September 28, 1998. The Access Board's transportation vehicle guidelines are codified at 36 CFR part 1192.

The Department of Transportation issued regulations to implement the transportation provisions of the ADA in 1991. 56 FR 45621 and 45756, September 6, 1991. The Department of Transportation's regulations are codified at 49 CFR parts 37 and 38. The Department of Transportation's regulations at 49 CFR part 37 specify in:

- Subpart B (§§ 37.21 to 37.37) which public and private entities must comply with the transportation provisions of the ADA;
- Subpart D (§§ 37.71 to 37.93) when transportation vehicles acquired or remanufactured by public entities must be accessible;
- Subpart E (§§ 37.101 to 37.109) when transportation vehicles acquired or remanufactured by private entities must be accessible; and
- Subpart H (§§ 37.181 to 37.197) when over-the-road buses acquired or remanufactured by private entities must be accessible.

The Department of Transportation's regulations at 49 CFR part 38 set out the accessibility standards that the transportation vehicles must meet. The accessibility standards in 49 CFR part 38 are consistent the Access Board's transportation vehicle guidelines in 36 CFR part 1192.

Proposed Rule

The Access Board is issuing this proposed rule to revise and update its accessibility guidelines for buses, over-the-road buses, and vans (hereinafter referred to as the "1991 guidelines"). The guidelines for transportation vehicles operated in fixed guideway systems (*e.g.,* rapid rail, light rail, commuter rail, and intercity rail) will be revised and updated at a future date.

The proposed rule addresses the following issues, which are further discussed later in the preamble:

- When the 1991 guidelines were issued, low floor ramped buses were relatively new and ramp slopes were based on what was feasible at the time. The 1991 guidelines permitted 1:4 maximum ramp slopes at bus stops without sidewalks. There are documented incidents of wheelchairs and their occupants tipping over backwards going up bus ramps with 1:4 slopes. Since the 1991 guidelines were issued, buses have been designed with lower floors and longer ramps that have less steep ramps. The proposed rule specifies 1:6 maximum slopes for ramps deployed to bus stops with sidewalks and to bus stops without sidewalks (referred to as the "roadway" in the proposed rule).

[1] The Americans with Disabilities Act requires barriers in existing transportation vehicles used by public accommodations for transporting individuals and by private entities to provide specified public transportation to be removed where readily achievable. 42 U.S.C.12182(b)(2)(A)(iv) and 12184(b)(2)(C). The Department of Justice and the Department of Transportation are responsible for issuing regulations implementing this requirement. 28 CFR 36.310 and 49 CFR 37.5(f).

• The 1991 guidelines require buses, over-the-road buses, and vans to provide "sufficient clearances" for passengers who use wheelchairs to reach the wheelchair spaces in the vehicles. Individuals with disabilities, transit operators, and vehicle manufacturers have requested guidance on what are "sufficient clearances." The proposed rule specifies minimum dimensions for circulation paths connecting doorways that provide accessible boarding and wheelchair spaces, and for wheelchairs to maneuver into and out of wheelchair spaces.

• Additional research has been conducted on wheelchair transportation safety since the 1991 guidelines were issued. The proposed rule reduces the design force for wheelchair securement systems on large vehicles with a gross vehicle weight rating of 30,000 pounds or more, and adds a requirement for a forward excursion barrier at rear facing wheelchair securement systems based on the research. The proposed rule also requests comments on other recommendations submitted by researchers and safety experts regarding wheelchair securement systems.

• Public transit agencies are increasingly deploying intelligent transportation system technologies on buses. These technologies enable automated stop and route announcements on buses. The proposed rule requires public transit agencies that operate 100 or more buses in annual maximum service in fixed route systems to provide automated stop and route announcements on newly acquired buses that are more than 22 feet in length and operate in fixed route systems.

• Bus rapid transit is a new type of service that did not exist when the 1991 guidelines were issued. Some bus rapid transit systems are designed with raised platforms to provide level boarding, and the vehicles which operate in these systems can have passenger doors on both sides of the vehicle. The proposed rule addresses how the requirements for accessible boarding, circulation paths, and doorways apply to vehicles which operate in bus rapid transit systems that provide level boarding.

The proposed rule also removes some requirements in the 1991 guidelines that are unnecessary, modifies other requirements, and adds a few new requirements. A side-by-side comparison of the proposed rule and the 1991 guidelines is available on the Access Board's Web site at *http://www.access-board.gov/transit/.* The side-by-side comparison shows what requirements are removed, modified, or new.

New Format and Organization

The 1991 guidelines for buses and vans are contained in subpart B of 36 CFR part 1192 (§§ 1192.21 to 1192.39) and for over-the-road buses are contained in subpart G of 36 CFR part 1192 (§§ 1192.151 to 1192.161).

The proposed rule uses a new format and organization that is based on the accessibility guidelines for buildings and facilities in 36 CFR part 1191. The new format sets forth the guidelines for buses, over-the-road buses, and vans in an appendix to 36 CFR part 1192. The appendix is organized into eight chapters:

• Chapter T1 contains general information, including definitions.

• Chapter T2 contains scoping requirements that specify what vehicle features are required to be accessible.

• Chapters T3 through T8 contain technical requirements that specify how to design the vehicle features so they are accessible.

When the guidelines for transportation vehicles operated in fixed guideway systems are revised and updated in the future, the scoping and technical requirements for those vehicles will be added to Chapters T2 through T8.

Each chapter is arranged logically, and contains numbered sections and sub-sections that address a single subject indicated by the heading or title of the section and subsection. Figures are provided after some sections or subsections to illustrate the requirement in the section or subsection. Non-mandatory advisory information is inserted in boxes after some sections or subsections and is clearly identified.

Most of the revisions in the proposed rule are editorial only, and restate current requirements in the 1991 guidelines in plain language that is clear and easy to understand. The side-by-side comparison of the proposed rule and the 1991 guidelines on the Access Board's Web site at *http://www.access-board.gov/transit* shows what revisions are editorial only.

Proposed Changes That Received Substantial Comment

The Access Board made available drafts of the proposed rule for public review and comment in April 2007 and November 2008. The drafts and comments on the drafts are available on the Access Board's Web site at: *http://www.access-board.gov/transit/.* Proposed changes that received substantial comment are discussed below. Sections of the proposed rule are referred to by number (*e.g.,* T201).

Ramp Slope

Current Requirements

When the 1991 guidelines were issued, low floor ramped buses were relatively new. The Access Board did not want to preclude the use of low floor ramped buses because of their efficiency and speed of boarding compared to high floor buses equipped with lifts. Consequently, the ramp slopes in the 1991 guidelines were based on what was feasible at the time. The 1991 guidelines specify a range of maximum slopes for ramps deployed to bus stops with sidewalks and to bus stops without sidewalks.[2] The maximum ramp slopes in the 1991 guidelines are shown in the table below and are expressed as the ratio of the rise (distance from bus stop surface to bus floor surface) to the run (usable length of the ramp).

1991 GUIDELINES

Height of vehicle floor above 6 inch curb*	Maximum ramp slope
Bus Stops with Sidewalks	
3 inches or less	1:4
6 inches or less but more than 3 inches	1:6
9 inches or less but more than 6 inches	1:8
more than 9 inches	1:12

[2] 36 CFR 1192.23(c)(5) and 1192.159(c)(5).

1991 GUIDELINES—Continued

Bus Stops without Sidewalks	
Height of vehicle floor above roadway	Maximum ramp slope
Any distance	1:4

*The 1991 guidelines assume a 6 inch curb at sidewalks.

The following example illustrates the application of the 1991 guidelines. A low floor bus with a 15-inch-high floor that can be lowered by the suspension system ("kneeled") to 12 inches at bus stops would have to provide a ramp that is at least 48 inches long to meet the maximum slope requirements at both bus stops with sidewalks and bus stops without sidewalks. At bus stops with sidewalks, the ramp slope would be 1:8. At bus stops without sidewalks, the ramp slope would be 1:4, or twice as steep as at bus stops with sidewalks.

Proposed Rule

Since the 1991 guidelines were issued, buses have been designed with lower floors and longer ramps that have less steep ramps.[3] Research shows that short ramps with slopes steeper than 1:8 are difficult for individuals with disabilities to use.[4] There are documented incidents of wheelchairs and their occupants tipping over backwards going up bus ramps with 1:4 slopes. A study of adverse incident reports from one public transit agency shows that a large percent of the incidents involving passengers who use wheelchairs occur while using bus ramps.[5]

T303.8.1 simplifies the requirements for ramp slope by specifying a 1:6 maximum slope for ramps deployed to bus stops with sidewalks and to bus stops without sidewalks (referred to as the "roadway" in the proposed rule).

The following example illustrates the application of T303.8.1. A low floor bus with a 14-inch-high floor that can be lowered by the suspension system ("kneeled") to 10 inches at bus stops would have to provide a ramp that is at least 60 inches long to meet the 1:6 maximum slope to the roadway. At bus stops with sidewalks, the ramp slope would be 1:15 (assuming a 6-inch curb).

Bus and ramp manufacturers who commented on the drafts of the proposed rule provided varied information on this proposed change. Some bus and ramp manufacturers stated that the proposed 1:6 maximum slope to the roadway is feasible. Other bus manufacturers stated that the proposed 1:6 maximum slope to the roadway would involve significant structural changes to buses, or may not be feasible for certain model buses.

Question 1: Bus and ramp manufacturers are requested to provide additional information on the feasibility of the proposed 1:6 maximum slope to the roadway. If significant structural changes to buses are involved, provide information on the lead time for making the changes; the costs associated with the changes; and how much the changes would add to the cost per bus. If it is not feasible or would be too costly for certain model buses to meet the proposed 1:6 maximum slope to the roadway, provide information on the vehicle's design constraints; the vehicle's floor height to the roadway at the doorway where the ramp is deployed (in the kneeled position where a "kneeling" feature is provided); and the usable length of the vehicle's ramp when deployed to the roadway.

Question 2: Van and ramp manufacturers and converters are requested to provide information on the feasibility of the proposed 1:6 maximum slope to the roadway for vans equipped with ramps, and any additional costs that would be incurred as a result of the proposed 1:6 maximum slope to the roadway.

Question 3: If it is not feasible or would be too costly for certain model buses or vans to provide ramps with 1:6 maximum slopes to the roadway, what alternative solutions should the Access Board or the Department of Transportation consider? For example, on fixed route systems where some or all of the bus stops on a particular route do not have sidewalks should only buses or vans that provide ramps with 1:6 maximum slopes to the roadway or are equipped with lifts be permitted to operate on that route? This would prevent incidents of wheelchairs and their occupants tipping over on steep ramps. Do different considerations apply to demand responsive systems? For example, are drivers of buses and vans used in demand responsive systems more likely to provide boarding assistance to passengers who use wheelchairs when ramps are deployed to the roadway and have slopes steeper than 1:6? What solutions do transit operators currently implement when ramps are deployed to the roadway and have slopes steeper than 1:6?

Public transit agencies who commented on the drafts of the proposed rule expressed concern that longer ramps (*e.g.,* bi-fold ramps) will be more costly to maintain. Public transit agencies also expressed operational concerns about deploying longer ramps in urban environments with narrow sidewalks and streets.

Question 4: Ramp manufacturers and public transit agencies that provide longer ramps on their buses are requested to provide information on whether longer ramps are more costly to maintain. If longer ramps are more costly to maintain, provide data on the annual costs to maintain a longer ramp (*e.g.,* 60 inches) and a shorter ramp (*e.g.,* 48 inches).

Question 5: Public transit agencies and others are requested to provide information on possible solutions to operational concerns about deploying longer ramps in urban environments with narrow sidewalks and streets. For example, should a public transit agency that operates buses in urban environments where all the bus stops have sidewalks be permitted to provide a 1:8 maximum slope to the sidewalk (assuming a 6-inch curb), instead of a 1:6 maximum slope to the roadway? If a public transit agency operates buses in urban environments where all the bus stops have sidewalks, and in other environments where some or all of the bus stops do not have sidewalks, and the public transit agency assigns low

[3] The Transbus prototype for the low floor ramped bus had a 17-inch-high floor that kneeled to approximately 13 inches and a 48-inch-long ramp. Low floor ramped buses available today have floors that are 14 to 15 inches high and can kneel to as low as 10 inches, and ramps that are as long as 60 inches.

[4] Templer, J., "Provisions for Elderly and Handicapped Pedestrians, Vol. 3: The Development and Evaluation of Countermeasures," Report No. FHWA–RD–79–3 Prepared for the Federal Highway Administration, Department of Transportation (May 1980), pp. 2–34.

[5] The transit agency reported 155 adverse incidents involving passengers who use wheelchairs during a six-year period from 2000 to 2005. In 49 of the incidents (42.6 percent), the passengers were going up or down bus ramps. In 29 of the incidents (25.7 percent), the wheelchairs tipped over on the bus ramps and/or the passenger fell. Frost K. & Bertocci, G., "Retrospective review of adverse incidents involving passengers seated in wheeled mobility devices while traveling in large accessible transit vehicles," 32 Medical Engineering & Physics 230–236 (2010).

floor ramped buses with shorter ramps to the urban environments only, and assigns low floor ramped buses with longer ramps or lift equipped buses to the other environments, should the public transit agency be permitted to provide a 1:8 maximum slope to the sidewalk (assuming a 6-inch curb), instead of a 1:6 maximum slope to the roadway on the low floor ramped buses that are assigned to the urban environments only?

Question 6: Public transit agencies are requested to provide the following information to assist the Access Board evaluate the impacts of the ramp slope requirements in the 1991 guidelines and the proposed rule:

- The number and percentage of bus stops in fixed route systems that do not have sidewalks;
- The number of individuals who are paratransit eligible because they cannot use buses with steep ramps, the average cost per paratransit trip, and the average number of paratransit trips per passenger per week; and
- The number of adverse incident reports for the past five years (2005–2009) involving low floor ramped buses and passengers who use wheelchairs or scooters, and how many of the incidents occurred while using ramps.

Circulation Paths Connecting Doorways That Provide Accessible Boarding and Wheelchair Spaces

Current Requirements

The Department of Transportation regulations require transit operators to transport wheelchairs and scooters that are up to 30 inches wide and 48 inches long.[6] The 1991 guidelines require buses, over-the-road buses, and vans to provide "sufficient clearances" for passengers who use wheelchairs to reach the wheelchair spaces in the vehicles.[7] Individuals with disabilities, transit operators, and vehicle manufacturers have requested guidance on what are "sufficient clearances."

Proposed Rule

T502.2 requires circulation paths connecting doorways that provide accessible boarding and wheelchair spaces to be at least 34 inches wide. This dimension does not apply to doorways, which are addressed in T503. This dimension applies from the vehicle floor to a height 40 inches minimum above the vehicle floor. The circulation path width can be reduced to 30 inches at heights 40 inches minimum above the vehicle floor.[8]

Bus manufacturers who commented on the drafts of the proposed rule provided varied information on this proposed change. Some bus manufacturers stated that 34-inch-wide circulation paths are feasible. Other bus manufacturers stated that seats would have to be eliminated to provide 34-inch-wide circulation paths.

Question 7: Bus manufacturers and transit operators are requested to provide additional information on the feasibility of the proposed clear width for circulation paths connecting doorways that provide accessible boarding and wheelchair spaces. If the proposed clear width will result in a loss of seats compared to the current requirement for "sufficient clearances," provide information on the width of the circulation path currently provided on the vehicle to reach the wheelchair space(s), and the number of seats that would be lost due to the proposed clear width. Floor and seating plans showing current designs and how the designs would have to be modified to comply with the proposed rule would be helpful for the Access Board to further evaluate this issue. Information describing how the loss of seats would affect the transit operator's system would also be helpful.

Question 8: Van manufacturers and converters are requested to provide information on the feasibility of the proposed clear width for circulation paths connecting doorways that provide accessible boarding and wheelchair spaces. If the proposed clear width will result in modifications to vans compared to the current requirement for "sufficient clearances," provide information on what modifications would be needed and any costs associated with the modifications. Information describing how the modifications would affect the transit operator's system would also be helpful.

The proposed rule does not address maneuvering space at turns, particularly right angle turns at the front of the bus. Some commenters recommended that performance specifications, including test methods, be established for passengers who use wheelchairs to reach wheelchair spaces in buses, over-the-road buses, and vans. The Rehabilitation Engineering Research Center on Accessible Public Transportation is developing a computer-aided design tool for the accessible design of vehicle interiors that may be useful for this purpose.

Question 9: Comments are requested on whether performance specifications should be established for passengers who use wheelchairs to reach wheelchair spaces in buses, over-the-road buses, and vans, and approaches for establishing such performance specifications.

Wheelchair Space Maneuvering Clearances

Current Requirements

As explained above, the Department of Transportation regulations require transit operators to transport wheelchairs and scooters that are up to 30 inches wide and 48 inches long.[9] The 1991 guidelines require wheelchair spaces in buses, over-the-road buses, and vans to be at least 30 inches wide and 48 inches long.[10]

Wheelchair spaces in buses, over-the-road buses, and vans are typically confined on three sides by seats, side walls, or wheel wells. Passengers who use wheelchairs and scooters need additional clearances to maneuver into and out of confined wheelchair spaces. As explained above, the 1991 guidelines require buses, over-the-road buses, and vans buses to provide "sufficient clearances" for passengers who use wheelchairs to reach wheelchair spaces in the vehicles.[11] Individuals with disabilities, transit operators, and vehicle manufacturers have requested guidance on what are "sufficient clearances."

Proposed Rule

The drafts of the proposed rule considered basing wheelchair space maneuvering clearances in buses, over-the-road buses, and vans on the dimensions for maneuvering clearances in alcoves in the accessibility guidelines for buildings and facilities.[12] Transit operators and vehicle manufacturers commented that those dimensions

[6] 49 CFR 37.3 (definition of "wheelchair" and "common wheelchair") and 37.165(b).

[7] 36 CFR 1192.23(a) and 1192.159(a)(1).

The 1991 guidelines require large buses that are more than 22 feet and over-the-road buses to provide at least two wheelchair spaces; and small buses and vans that are 22 feet or less to provide at least one wheelchair space. *Id.* The wheelchair spaces are required to be located as near as practicable to doorways that provide accessible boarding, and to be identified by the International Symbol of Accessibility. 36 CFR 1192.23(d)(2), 1192.27(b), and 1192.159(d)(2). The proposed rule does not change these requirements.

[8] The overhead clearances for circulation paths specified in T502.2 are the same as in the 1991 guidelines. 36 CFR 1192.29(f) and 1192.153(d). The requirement in T502.3 that features such as stanchions and fare collection devices not interfere with the maneuvering of wheelchairs is the same as in the 1991 guidelines. 36 CFR 1192.23(a) and (e), and 1192.33.

[9] *See* note 6.

[10] 36 CFR 1192.23(d)(2) and 1192.159(d)(2).

[11] *See* note 7.

[12] The accessibility guidelines for buildings and facilities require 12 inches minimum maneuvering clearance for parallel approach into and out of an alcove, and 6 inches minimum maneuvering clearance for forward approach into and out of an alcove. 36 CFR part 1191, Appendix D, 305.7.

would result in the loss of a significant number of seats, and would involve significant structural changes to paratransit minivans that provide rear entry to wheelchair spaces. The proposed rule does not use the dimensions for maneuvering clearances in alcoves in the accessibility guidelines for buildings and facilities.

The proposed rule uses the following dimensions recommended by transit operators for wheelchair space maneuvering clearances in buses, over-the-road buses, and vans:

- T402.4.1 requires 1 inch minimum maneuvering clearance on the short side of wheelchair spaces entered from the front or rear [the total size of the wheelchair space and maneuvering clearance is 31 inches by 48 inches minimum]; and
- T402.4.2 requires 6 inches minimum maneuvering clearance on the long side of wheelchair spaces entered from the side [the total size of the wheelchair space and maneuvering clearance is 30 inches by 54 inches minimum].

The transit operators who recommended these dimensions stated that they will provide "sufficient clearances" for most wheelchairs and scooters to maneuver into and out of wheelchair spaces in buses, over-the-road buses, and vans, and will not result in a loss of seats or structural changes to paratransit minivans that provide rear entry to wheelchair spaces.

Fold-down seats are permitted to occupy the wheelchair space and maneuvering clearance provided the wheelchair space and maneuvering clearance are not obstructed when the seats are in the up position. Fold-down seats are permitted to occupy the maneuvering clearance when the wheelchair space is occupied. Figures are provided in T402.4.1 and T402.4.2 to illustrate the wheelchair space and maneuvering clearance, and use of fold-up seats.

Question 10: Individuals with disabilities are requested to comment on whether the proposed maneuvering clearances are sufficient for wheelchairs and scooters to maneuver into and out of wheelchair spaces in buses, over-the-road buses, and vans.

Question 11: Transit operators and vehicle manufacturers are requested to comment on whether the proposed maneuvering clearances and use of fold-down seats will result in a loss of seats compared to the current requirement for "sufficient clearances." If the proposed maneuvering clearances and use of fold-down seats will result in a loss of seats, provide information on the size of the clearances currently provided on the vehicle to maneuver into and out of the wheelchair space(s), and the number of seats that would be lost due to the proposed maneuvering clearances. Floor and seating plans showing current designs and how the designs would have to be modified to comply with the proposed rule would be helpful for the Access Board to further evaluate this issue. Information describing how the loss of seats would affect the transit operator's system would also be helpful.

Question 12: Manufacturers and operators of paratransit minivans are requested to provide information on the feasibility of providing additional maneuvering clearance (beyond 1 inch) for rear entry to a wheelchair space without making significant structural changes to the vehicles.

Wheelchair Securement Systems

Current Requirements

The 1991 guidelines require buses, over-the road-buses, and vans to provide wheelchair securement systems at each wheelchair space.[13] The 1991 guidelines specify that the wheelchair securement systems secure the wheelchair so that the occupant faces the front or rear of the vehicle.[14] On large buses that are more than 22 feet in length, at least one wheelchair securement system must be front facing.[15] Side facing securement is not permitted.

Proposed Rule

The proposed rule includes two changes to the current technical requirements for wheelchair securement systems based on research conducted on wheelchair transportation safety since the 1991 guidelines were issued.

T403.3.1 reduces the minimum force that wheelchair securement systems must be designed to restrain wheelchairs and their occupants in the forward longitudinal direction in large vehicles with a gross vehicle weight rating of 30,000 pounds or more. The design force is reduced from 4,000 pounds to 2,000 pounds based on research showing the "g" loads generated on wheelchairs and their occupants in large vehicles under the following conditions: Maximum acceleration (0.2g), maximum braking (0.85g), rapid turning (0.5g), and frontal collision (3g).[16] Wheelchair securement systems that are designed to restrain a force of 2,000 pounds in the forward longitudinal direction in large vehicles would provide an appropriate level of protection based on these "g" loads.

Question 13: Comments are requested on this proposed reduction in design force for wheelchair securement systems in large vehicles. How will the proposed change affect the costs for wheelchair securement systems in large vehicles?

T403.5 modifies the technical requirements for rear facing wheelchair securement systems to include a forward excursion barrier in addition to the current requirement for a padded headrest. The forward excursion barrier extends from the vehicle floor to a height of 24 inches minimum for the full width of the wheelchair space.[17]

Question 14: Comments are requested on including a forward excursion barrier in the technical requirements for rear facing wheelchair securement systems. Are rear facing securement systems commonly provided in buses, over-the road-buses, and vans? Where provided in new buses, over-the road-buses, and vans, do rear facing securement systems currently include forward excursion barriers? Will the forward excursion barrier result in any additional costs for new buses, over-the road-buses, and vans that provide rear facing securement systems?

Recommendations Submitted by Researchers and Safety Experts That Are Not Included in the Proposed Rule

Researchers and safety experts who commented on the drafts of the proposed rule submitted four recommendations regarding the technical requirements for wheelchair securement systems that are not included in the proposed rule. Their recommendations are summarized below.

1. SAE Recommended Practice J2249, Wheelchair Tiedown and Occupant Restraint Systems for Use in Motor Vehicles (June 9, 1999)

Researchers and safety experts recommended that front facing wheelchair securement systems comply with SAE Recommended Practice J2249, Wheelchair Tiedown and Occupant Restraint Systems for Use in Motor

[13] 36 CFR 1192.23(a) and 1192.159(a)(1). The proposed rule does not change this requirement.

[14] 36 CFR 1192.23(d)(4) and 1192.159(d)(4). The proposed rule does not change this requirement.

[15] *Id.* The proposed rule does not change this requirement.

[16] The research is referenced in comments submitted by the Rehabilitation Engineering and Assistive Technology Society of North America and Rehabilitation Engineering Research Center on Wheelchair Transportation Safety. The comments are available on the Access Board's Web site at: *http://www.access-board.gov/transit/.*

[17] The dimensions for the forward excursion barrier are based on comments submitted by the Rehabilitation Engineering and Assistive Technology Society of North America. The comments are available on the Access Board's Web site at: *http://www.access-board.gov/transit/.*

Vehicles (June 9, 1999).[18] SAE Recommended Practice J2249 specifies design requirements, performance requirements, and test methods for wheelchair tiedown and occupant restraint systems for use in motor vehicles, and includes requirements for product marking and labeling and manufacturer's instructions to installers and users.

2. Wheelchair Securement Systems in Small Vehicles

Researchers and safety experts recommended that rear facing wheelchair securement systems not be permitted in small vehicles with a gross vehicle weight rating of less than 30,000 pounds because current wheelchair securement systems have not been designed and tested to secure rear facing wheelchairs in small vehicles and to withstand the high "g" loads generated on wheelchairs and their occupants in a small vehicle by a frontal collision. They also recommended that the 5,000 pounds minimum design force specified in the 1991 guidelines for small vehicles be increased for forward facing wheelchair securement systems.

3. Movement Under Emergency Driving Conditions

Researchers and safety experts recommended that performance specifications and test methods be established for wheelchair securement systems to limit movement of an occupied wheelchair under emergency driving conditions, such as maximum braking and rapid turning.

4. Rear Facing Compartmentalization

Researchers and safety experts recommended that "rear facing compartmentalization" be permitted in large vehicles with a gross vehicle weight rating of 30,000 pounds or more, especially bus rapid transit vehicles. "Rear facing compartmentalization" is used in Europe and Canada. As explained by the researchers and safety experts, in "rear facing compartmentalization" the wheelchair occupant backs as close as possible to a rear-facing padded excursion barrier and there is a means to prevent the wheelchair from tipping into the aisle. "Rear facing compartmentalization" assumes that the wheelchair has brakes which are functioning and that the friction between the wheelchair wheels and the floor is high enough to prevent sliding. "Rear facing compartmentalization" does not require the attachment of wheelchair securement systems to the wheelchair. Researchers and safety experts also recommended that seat belts and shoulder belts should not be required where "rear facing compartmentalization" is permitted in large vehicles.

Question 15: Comments are requested on whether any of the above recommendations should be included in a subsequent rulemaking.

Automated Stop and Route Announcements

Current Requirements

The 1991 guidelines require buses that are more than 22 feet in length and operate in fixed route systems to provide public address systems for announcing stops.[19] The Department of Transportation regulations require stops and routes to be announced.[20] These requirements apply to both public transit agencies and private transit operators. Failure to announce stops and routes is a frequent source of complaints to the Department of Transportation and lawsuits against public transit agencies.

Proposed Rule

Public transit agencies are increasingly deploying intelligent transportation system technologies that enable automated stop and route announcements. Automated announcements provide standardized messages and result in increased compliance with current regulatory requirements.

The drafts of the proposed rule considered requiring public transit agencies to provide automated stop and route announcements on buses that are more than 22 feet in length and operate in fixed route systems. The American Public Transportation Association commented that the cost of providing automated announcements would be burdensome for small public transit agencies, and recommended that only large public transit agencies that operate 100 or more buses in peak service be required to provide automated announcements.

T203.13 requires large public transit agencies that operate 100 or more buses in annual maximum service in fixed route systems, as reported in the National Transit Database, to provide automated stop and route announcements on buses that are more than 22 feet in length and operate in fixed route systems.

The Access Board prepared a report to estimate the costs of this proposed change. The report is available on the Access Board's Web site at: *http://www.access-board.gov/transit/.* According to the National Transit Database, 87 public transit agencies operate 100 or more buses in annual maximum service in fixed route systems. More than 90 percent of these public transit agencies currently provide automated stop and route announcements on buses. The report assumes that the public transit agencies will continue to provide automated announcements on buses in the future, and will not incur any additional costs as a result of the proposed rule.

Only 7 public transit agencies that operate 100 or more buses in annual maximum service in fixed route systems do not currently provide automated stop and route announcements on buses. The total estimated costs of requiring automated announcements for the 7 public transit agencies are presented below. The cost estimates include one-time costs to equip new buses and to set-up backend systems for implementing automated announcements, and on-going maintenance and operation costs for the bus equipment and backend systems. The low cost and high cost scenarios account for variables that can affect the costs.

	Costs	Present value (3%)*	Present value (7%)*
Low Cost Scenario			
Total Costs Over 12 Year Bus Replacement Cycle	$9,548,280	$8,027,897	$6,534,112
Annualized Costs	795,690	668,991	544,509

[18] SAE Recommended Practice J2249 is being revised and updated, and will be published as the American National Standards Institute (ANSI)/Rehabilitation Engineering and Assistive Technology Society of North America (RESNA) WC–18 standard.

[19] 36 CFR 1192.35(a).

[20] 49 CFR 37.167(b) and (c).

	Costs	Present value (3%)*	Present value (7%)*
High Cost Scenario			
Total Costs Over 12 Year Bus Replacement Cycle	19,678,022	16,809,905	13,970,121
Annualized Costs	1,639,835	1,400,825	1,164,767

* Present value is based on discount rates in OMB Circular No. A–94.

Question 16: Comments are requested on the report estimating the costs of requiring automated stop and route announcements, including the data and assumptions in the report.

Forty (40) of the public transit agencies that operate 100 or more buses in annual maximum service in fixed route systems contract with private entities to operate some or all of the buses. The Department of Transportation regulations require a private entity that acquires vehicles to operate in a fixed route system under contract with a public transit agency to comply with the accessibility standards applicable to the public transit agency.[21] The report estimating the costs of requiring automated stop and route announcements identifies the 40 public transit agencies that contract with private entities to operate buses in their fixed route systems, and the private entities that operate the buses. These private entities would have to comply with T203.13 if they acquire buses to operate in fixed route systems under contract with the public transit agencies. These private entities would not be affected by T203.13 if the public transit agencies provide the buses to the private entities to operate, or if the private entities deploy buses from their existing fleets to operate in the fixed route systems under contract with the public transit agencies. Information is not available on whether any of the private entities that contract with the public transit agencies acquire buses to operate in fixed route systems under contract with the public transit agencies.

Question 17: Private entities that contract with public transit agencies operating 100 or more buses in annual maximum service in fixed route systems and acquire buses to operate in the fixed route systems under contract with the public transit agencies, are requested to provide information on the number of buses acquired on an annual basis for operation in the fixed route systems under contract with the public transit agencies, and whether the buses provide automated stop and route announcements.

For public transit agencies that have invested in intelligent transportation system technologies, the incremental cost of providing automated stop and route announcements is relatively low compared to public transit agencies that do not invest in such technologies. The Access Board is considering as an alternative requiring only public transit agencies that have invested in intelligent transportation system technologies to provide automated announcements. Under this alternative, large public transit agencies that have not invested in intelligent transportation system technologies would not be required to do so in order to provide automated announcements. Small public transit agencies that have invested in intelligent transportation system technologies would be required to provide automated announcements, and many of these public transit agencies currently provide automated announcements. The requirement to provide automated announcements would apply only to newly acquired buses. Existing buses would not be required to provide automated announcements.

Question 18: Comments are requested on whether only public transit agencies that have invested in intelligent transportation system technologies should be required to provide automated stop and route announcements.

T704.1 requires automated stop and route announcements to use recorded or digitized human speech. T704.2 requires the stop announcements to be audible within the vehicle, and T704.3 requires the route announcements to be audible at boarding and alighting areas. T704.2 also requires signs within the bus to display stops.

Question 19: Comments are requested on whether there are appropriate standards for audio quality that should be referenced in T704.1 or recommended in advisory information.

Question 20: Comments are requested on whether intelligent transportation system technologies currently in use have the capability to communicate stop and route information to passengers through personal communications devices (e.g., text messaging), in addition to audible and visible announcements through speakers and signs. If intelligent transportation system technologies do not have this capability, are there other technologies that can communicate stop and route information to passengers through personal communications devices (*e.g.,* text messaging)? Comments are requested on the costs and benefits of communicating stop and route information to passengers through personal communications devices.

Service Issues

Transit operators who commented the drafts of the proposed rule requested guidance on the transportability of certain size wheelchairs and mobility devices (*e.g.,* Segways). The Department of Transportation is responsible for issuing regulations regarding the provision of transportation services to individuals with disabilities under the Americans with Disabilities Act. The Department of Transportation regulations specify the size of wheelchairs that must be transported.[22] The Department of Transportation has also issued guidance on the use of Segways on transportation vehicles.[23] The Department of Transportation will conduct a separate rulemaking to amend its regulations so that the accessibility standards included in the regulations are consistent with the revisions to Access Board's transportation vehicle guidelines. Comments on transportability of certain size wheelchairs and mobility devices, and other service issues should be submitted to the Department of Transportation when it amends its regulations.

Section-by-Section Analysis

The other proposed revisions to the 1991 guidelines for buses, over-the-road buses, and vans are discussed below.

[21] 49 CFR 37.23(b).

[22] 49 CFR 37.3 (definition of "wheelchair" and "common wheelchair") and 37.165 (b). This proposed rule does not use the term "common wheelchair" because the relevant technical requirements for lift platforms, ramps and bridgeplates, circulation paths, and wheelchair spaces specify the appropriate dimensions for those features.

[23] Use of "Segways" on Transportation Vehicles [*http://www.fta.dot.gov/civilrights/ada/civil_rights_3893.html*].

Most of the revisions are editorial only, and the requirements are the same as in the 1991 guidelines. Revisions that modify current requirements or add new requirements are discussed under each section below.

Question 21: Comments are requested on whether any of the revisions that modify current requirements or add new requirements would add to the costs of the vehicles. Comments should identify the requirement and section number, and provide specific information about any costs.

Chapter T1: Application and Administration

T101 General

This section clarifies that the scoping and technical requirements apply to the acquisition of new, used, and remanufactured vehicles and the remanufacture of existing vehicles to the extent required by regulations issued by the Department of Transportation. As discussed at the beginning of the preamble, the Department of Transportation regulations specify which public and private entities must comply with the transportation provisions of the ADA, and when transportation vehicles acquired or remanufactured by the public or private entities must be accessible. As explained above, the Department of Transportation will conduct a separate rulemaking to amend its regulations so that the accessibility standards included in the regulations are consistent with the revisions to Access Board's transportation vehicle guidelines. When the Department of Transportation amends its regulations, the Department of Transportation will establish the effective date for the revised accessibility standards.

T102 Equivalent Facilitation

The revisions to this section are editorial only. Transit operators can use alternative designs and technologies that result in substantially equivalent or greater accessibility or usability. The Department of Transportation regulations contain procedures for determining whether alternative designs and technologies provide equivalent facilitation.[24]

T103 Conventions

The revisions to T103.1 on dimensions and T103.2 on tolerances are editorial only. T103.3 explains that figures are provided for information purposes only, except for the International Symbol of Accessibility in Figure T703. T103.4 explains that measurements are stated in metric and U.S. customary units and that each system of measurement is to be used independently of the other. T103.5 explains that the length of buses, over-the-road buses, and vans is measured from standard bumper to standard bumper, exclusive of any additional protrusions.

T104 Definitions

T104.1 adopts the definitions in the Department of Transportation regulations for terms that are used in the proposed rule and are defined in the Department of Transportation regulations. These terms include: Accessible, bus, fixed route system, new vehicle, over-the-road bus, public entity, remanufactured vehicle, used vehicle, and wheelchair.[25] T104.2 uses collegiate dictionaries to determine the meaning of terms that are not defined in the proposed rule or the Department of Transportation regulations. T104.3 explains that singular and plural words, terms, and phrases are used interchangeably. T104.4 adds new definitions for the terms: boarding device, bridgeplate, level boarding bus system, operable part, and surface discontinuities.

Chapter T2: Scoping Requirements

T201 General

This introductory section states that new, used, and remanufactured vehicles are required to comply with the scoping requirements in Chapter 2 to the extent required by the Department of Transportation regulations.

T202 Reduction in Access Prohibited

This section clarifies that modifications to an accessible vehicle must not decrease the accessibility of the vehicle below the requirements in effect at the time of the modification.

T203 Buses, Over-the-Road Buses, and Vans

This section contains the scoping requirements for buses, over-the-road buses, and vans. The scoping requirements address 14 features that affect the accessibility and usability of the vehicles, and reference the technical requirements in Chapters T3 through T8 that the features must comply with to be readily accessible to and usable by individuals with disabilities. Some scoping requirements are based on the size of the vehicles, or apply only to vehicles operated in fixed route systems or vehicles operated by public entities (*i.e.,* State or local government units). The scoping requirements in T203 should be consulted before reading the technical requirements in Chapters T3 through T8 to determine what technical requirements apply to the vehicle.

T203.1 is a general introductory subsection that plainly states the scoping requirements in T203 apply to buses, over-the-road buses, and vans. The subsequent subsections in T203 simply refer to buses, over-the-road buses, and vans as vehicles. Buses, over-the-road buses, and vans are simply referred to as vehicles in the discussion of those subsections below.

Accessible Boarding

The scoping requirements for accessible boarding in T203.2 are modified to address bus rapid transit systems in which some or all of the designated stops have station platforms that are coordinated with the vehicle floor to provide level boarding. These systems are referred to as level boarding bus systems in the proposed rule.

T203.2.1 retains the current requirement in the 1991 guidelines that all vehicles provide lifts or ramps for accessible boarding. The current exception that permits over-the-road buses to provide portable or station-based boarding devices is removed.

T203.2.1 clarifies that lifts and ramps must be capable of being deployed to all designated stops on the route to which the vehicle is assigned and to the roadway.

T203.2.1.2 modifies the scoping requirements for ramps as follows:

- Ramps on vehicles more than 6.7 m (22 feet) in length must be permanently installed and power operated.
- Vehicles that operate in level boarding bus systems where all the designated stops have station platforms are permitted to provide on board the vehicle portable ramps that can be deployed to the roadway in the event that the vehicle breaks down on the roadway.

Additional scoping requirements apply to vehicles operating in level boarding bus systems as follows:

- T203.2.2.1 requires the design of the vehicles to be coordinated with the station platforms to minimize the gap between the vehicle floor and the station platform.
- T203.2.2.2 requires the vehicles to provide ramps or bridgeplates that can be deployed to the station platforms where the gap between the vehicle floor and station platforms is greater than 51 mm (2 inches) horizontally or 16 mm (5/8 inch) vertically when measured at 50 percent passenger load with the vehicle at rest. Where these gap dimensions are not exceeded, accessible boarding can

[24] 49 CFR 37.7(b).

[25] The Department of Transportation regulations define these terms in 49 CFR 37.3.

be provided at station platforms without ramps or bridgeplates. Where ramps or bridgeplates are provided on vehicles, T303.8.2 specifies a 1:8 maximum ramp slope to the station platforms.

• Where ramps or bridgeplates are required to provide accessible boarding at station platforms, T203.2.2.2.1 requires vehicles with doorways on one side of the vehicle to provide ramps or bridgeplates in at least one doorway; and T203.2.2.2.2 requires vehicles with doorways on two sides of the vehicle to provide ramps or bridgeplates in at least one doorway on each side of the vehicle. The ramps or bridgeplates must be permanently installed and power operated. Ramps provided to comply with T203.2.1 can be used to provide accessible boarding at one doorway. Bridgeplates can be used to provide accessible boarding at additional doorways.

The technical requirements for lifts, ramps, and bridgeplates are discussed under Chapter T3.

Wheelchair Spaces

The scoping and technical requirements for wheelchair spaces are discussed under Proposed Changes That Received Substantial Comment.

Circulation Paths

T 203.4.1 requires all circulation paths to comply with the technical requirements for surfaces. The technical requirements for surfaces are discussed under T802.

T203.4.2.1 clarifies that circulation paths must connect each wheelchair space to a doorway with a boarding device that can be deployed to the roadway. Where a portable ramp is permitted on vehicles operating in level boarding bus systems, a circulation path must connect each wheelchair space to a doorway where a portable ramp can be deployed to the roadway.

Additional scoping requirements apply to vehicles operating in level boarding bus systems. T403.4.2.2 requires a circulation path to connect each wheelchair space to a doorway that provides accessible boarding at station platforms. Where doorways are provided on two sides of the vehicle, a circulation path must connect each wheelchair space to a doorway on each side of the vehicle that provides accessible boarding at station platforms.

The technical requirements for circulation paths that connect wheelchair spaces to doorways are discussed under Proposed Changes That Received Substantial Comment.

Doorways

T203.5.1 through T203.5.3 require doorways with lifts or ramps, doorways with level-entry boarding, and doorways with steps on over-the-road buses to comply with the applicable technical requirements in T503, which are discussed under that section. T203.5.4 requires doorways that provide accessible boarding to be identified on the exterior of the vehicle by the International Symbol of Accessibility, unless all the doorways provide accessible boarding. Where lighting is provided at doorways, T203.5.5 requires the lighting to comply with the technical requirements for lighting in T803, which are discussed under that section.

Steps

T203.6 requires steps on vehicles to comply with the technical requirements in T504, which are discussed under that section.

Handrails, Stanchions, and Handholds

The revisions to the scoping requirements for handrails, stanchions, and handholds at passenger doorways, at fare collection devices where provided, and along circulation paths in T203.7.1 are editorial only. Transit operators and vehicle manufacturers commenting on the drafts of the proposed rule noted it is not practical to provide stanchions or handholds on high-back reclining seats that are typically provided on over-the-road buses. T203.7.2 clarifies the location of handrails, stanchions, and handholds at forward and rear-facing seats on large vehicles that are more than that are more than 6.7 m (22 feet) in length. Handholds or stanchions must be provided on the back of low-back non-reclining seats, and handrails must be provided overhead or on overhead luggage racks at high-back reclining seats. The technical requirements for handrails, stanchions, and handholds are discussed under T505.

Wheelchair Securement Systems

The scoping and technical requirements for wheelchair securement systems are discussed under Proposed Changes That Received Substantial Comment.

Seat Belts and Shoulder Belts

The revisions to the scoping requirements for seat belts and shoulder belts in T203.9 are editorial only.

Seats

T203.10.1 clarifies the scoping requirements for the number and location of priority seats for passengers with disabilities on vehicles operated in fixed route systems. At least two seats must be designated as priority seats for passengers with disabilities. The seats must be located as near as practicable to a doorway that is used for both boarding and alighting. Where aisle facing and forward facing seats are provided, one of the priority seats must be an aisle facing seat and one of the priority seats must be a forward facing seat. The revisions to the scoping requirements for priority seat signs in T203.10.2 are editorial only. The signs must inform other passengers to make the seats available to passengers with disabilities.

T203.10.3 modifies the scoping requirements for folding or removable armrests on the aisle side of seats on over-the-road buses. The 1991 guidelines require at least 50 percent of aisle seats, including all moveable or removable seats at wheelchair spaces, to provide folding or removable armrests to permit easy access to the seats by passengers with disabilities.[26] T203.10.3 requires all moveable or removable aisle seats at wheelchair spaces and at least 25 percent of all other aisle seats to provide folding or removable armrests.

Destination and Route Signs

The revisions to the scoping requirements for destination and route signs in T203.11 are editorial only. Where destination and route signs are provided on the exterior of a vehicle, the signs must be provided on the front and boarding side of the vehicle, and must be illuminated. The technical requirements for characters on the signs are discussed under T702.

Public Address Systems

The revisions to the scoping requirements for public address systems in T203.12 are editorial only. Vehicles more than 6.7 m (22 feet) in length that operate in fixed route systems and stop at multiple designated stops must provide a public address system to announce stops and provide other passenger information within the vehicle.

Automated Stop and Route Announcements

The scoping and technical requirements for automated stop and route announcements are discussed under Proposed Changes That Received Substantial Comment.

Stop Request Systems

The revisions to the scoping requirements for stop request systems in T203.14 are editorial only. Vehicles

[26] 36 CFR 1192.161.

more than 6.7 m (22 feet) in length that operate in fixed route systems and stop at multiple designated stops on passenger request must provide a stop request system. The technical requirements for stop request systems are discussed under T705.

Fare Collection Devices

T203.15 requires fare collection devices on vehicles to comply with the technical requirements in T806, which are discussed under that section.

Chapter T3: Boarding Devices

T301 General

This section states that the technical requirements for boarding devices in Chapter T3 apply where required by the scoping requirements in Chapter T2.

T302 Lifts

This section contains the technical requirements for lifts. Advisory information is added after T302.1 regarding the Federal Motor Vehicle Safety Standards (FMVSS) for motor vehicle lifts issued by the National Highway Traffic Safety Administration. The FMVSS are generally consistent with T302. Some of the requirements in T302 are more stringent than the FMVSS, including openings in lift platform surfaces in T302.5.1 and T802.3, and transitions at the boarding edges of threshold ramps on lift platforms in T302.5.5 and T802.5. T302 also contains some requirements that are not addressed in the FMVSS, including door releases for manual operation of lifts in T302.4, boarding direction in T302.5.9, and use by standees in T302.5.10.

T302.2 specifies a 273 kg (600 pounds) minimum design load for lifts. The drafts of the proposed rule considered increasing the design load to 300 kg (660 pounds). Comments from transit operators and vehicle manufacturers recommended that changes to the design load be coordinated with the FMVSS. The FMVSS requires a series of tests for lifts using a standard load of 273 kg (600 pounds). Based on the comments, the design load is not changed.

The following technical requirements in T302 are modified:

- T302.4 requires doors that must be opened to manually operate the lift if the power fails to have interior and exterior manual releases. Exterior releases can have locks to secure the vehicle when unattended. The other requirements in T302.4 for manual operation of lifts in the event of power failure are the same as in the 1991 guidelines.
- T302.5.2 increases the height for measuring the clear width and length above the lift platform surface from 766 mm (30 inches) to 1015 mm (40 inches) minimum to accommodate the controls on power wheelchairs. T 302.5.2 also clarifies that the clear length measured at the platform surface is 1015 mm (40 inches) minimum. The other dimensions in T302.5.2 for the lift platform surface are the same as in the 1991 guidelines.
- T302.5.4 revises the specification for gaps between the lift platform surface and the vehicle floor to be consistent with the specifications for openings in T302.5.3. Gaps and openings must not allow the passage of a sphere more than 16 mm (⅝ inch) in diameter.
- T302.5.5 requires transitions at threshold ramps on the boarding edge of lift platforms to comply with T802.5. T802.5 limits surface discontinuities to 6.4 mm (¼ inch) high maximum without edge treatment and 13 mm (½ inch) high maximum with beveled edge treatment. The bevel must have a slope not steeper than 1:2 (50 percent) applied across the entire surface discontinuity. The other requirements in T302.5.5 for the slope of threshold ramps on the boarding edge of lift platforms are the same as in the 1991 guidelines.
- T302.5.6 revises the requirement for visual contrast on the sides of lift platform surfaces to be consistent with the FMVSS. The perimeter of lift platform surfaces must have a 25 mm (1 inch) minimum outline that contrasts visually with the rest of the platform surface.
- T302.5.7 eliminates the load test for lift platform deflection. The FMVSS specifies a load test for lift platform deflection. The other requirements in T302.5.7 for lift platform deflection are the same as in the 1991 guidelines.

The revisions to the other technical requirements in T302 are editorial only. Those technical requirements are the same as in the 1991 guidelines and are summarized below:

- T302.3.1 requires interlocks to prevent the vehicle from moving when the lift is not stowed and the lift controls from operating unless the interlocks are engaged.
- T302.3.2 requires lift controls to be of a momentary contact type; permit the operator to change the operation sequence; and prevent the lift platform from folding, retracting, or stowing when occupied, unless the platform is designed to be occupied when stowed in the passenger area of the vehicle.
- T302.5.1 requires lift platform surfaces to comply with the technical requirements for surfaces in T802.
- T302.5.3 requires edge barriers on the sides of lift platforms to prevent the wheels of wheelchairs from rolling off the platforms.
- T302.5.8.1 specifies the movement rate for lifts under normal operating conditions.
- T302.5.8.2 specifies the movement rate for lifts in the event of a power failure or single failure of a load carrying component.
- T302.5.9 requires lift platforms to permit passengers who use wheelchairs to board the platforms facing either toward or away from the vehicle.
- T302.5.10 requires lift platforms to be usable by passengers who use mobility aids or have difficulty using steps.
- T302.5.11 requires lift platform to have handrails on two sides of the platform that move in tandem with the platform to provide support for passengers in a standing position.

T303 Ramps and Bridgeplates

This section contains the technical requirements for ramps and bridgeplates. The technical requirements for ramp slope in T303.8 are discussed under Proposed Changes That Received Substantial Comment.

The following technical requirements in T303 are also modified:

- T303.4 requires power operated ramps and bridgeplates to be operated manually if the power fails.
- T303.5 requires ramp and bridgeplate surfaces to comply with the technical requirements in T802 for surfaces. T802.3 requires that openings in surfaces not allow the passage of a sphere more than 16 mm (⅝ inch) in diameter, and that elongated openings be placed so that the long dimension is perpendicular to the dominant direction of travel. Cut-outs are permitted in ramps and bridgeplates that are deployed manually for the operator to grasp the surface. The other requirements in T802 for slip resistant surfaces and protrusions on surfaces are the same as in the 1991 guidelines.
- T303.7 clarifies that edge barriers are required where the edges of ramps and bridgeplates are more than 75 mm (3 inches) above the boarding or alighting area.
- T303.9 requires transitions at the boarding edge of ramps and bridgeplates to comply with T802.5. T802.5 limits surface discontinuities to 6.4 mm (¼ inch) high maximum without edge treatment and 13 mm (½ inch) high maximum with beveled edge treatment. The bevel must have a slope not steeper than 1:2 (50 percent) applied across the entire surface discontinuity.

• T303.10 revises the requirement for visual contrast on the sides of ramp and bridgeplate surfaces. The perimeter of ramp and bridgeplate surfaces must have a 25 mm (1 inch) minimum outline that contrasts visually with the rest of the ramp and bridgeplate surface.

The revisions to the other technical requirements in T303 are editorial only. Those technical requirements are the same as in the 1991 guidelines and are summarized below:

• T303.1 permits ramps and bridgeplates to fold or telescope if all the requirements in T303 are met.

• T303.2 specifies the minimum design load for ramps and bridgeplates. The drafts of the proposed rule considered increasing the design load for ramps and bridgeplates to correspond with an increase in the design load for lifts. As discussed under T302, the design load for lifts is not changed and no corresponding change is made to the design load for ramps and bridgeplates. The design load for ramps and bridgeplates that are 760 mm (30 inches) or more in length is 273 kg (600 pounds). The design load for ramps and bridgeplates that are less than 760 mm (30 inches) in length is 136 kg (300 pounds).

• T303.3 requires ramps and bridgeplates to be firmly attached to the vehicle when in use.

• T303.6 specifies the minimum clear width for ramps and bridgeplates.

• T303.11 specifies the gap permitted between the ramp or bridgeplate surface and the vehicle floor when the ramp or bridgeplate is deployed.

• T303.12 requires portable ramps and bridgeplates to be stowed safely when not in use and not to interfere with the maneuvering of wheelchairs.

Chapter T4: Wheelchair Spaces and Securement Systems

The technical requirements for wheelchair spaces in T402, and wheelchair securement systems in T403 are discussed under Proposed Changes That Received Substantial Comment. The revisions to the technical requirements for seat belts and shoulder belts in T404 are editorial only.

Chapter T5: Circulation Paths and Doorways on Buses, Over-the-Road Buses, and Vans

T501 General

This section states that the technical requirements for circulation paths on buses, over-the-road buses, and vans in Chapter T3 apply where required by the scoping requirements in Chapter T2.

T502 Circulation Paths

The technical requirements in T502 for circulation paths that connect wheelchair spaces to doorways that provide accessible boarding are discussed under Proposed Changes That Received Substantial Comment.

T503 Doorways

T503.1 specifies the minimum vertical clearance at doorways with lifts or ramps. The revisions to this section are editorial only, and the technical requirements are the same as in the 1991 guidelines: 1420 mm (56 inches) on vehicles 6.7 m (22 feet) or less in length; 1650 mm (65 inches) on over-the-road buses; and 1725 mm (68 inches) on other vehicles more than 6.7 m (22 feet) in length. A minimum clear opening is not specified for doorways with lifts or ramps since a minimum clear width of 760 mm (30 inches) is specified for lift platforms in T302.5.2 and for ramps in T303.6.

T503.2 adds new technical requirements for doorways with level entry boarding.

T503.2.1 specifies the minimum clear opening at the doorways: 810 mm (32 inches).

T503.2.2 requires thresholds at the doorways to be marked by a contrasting strip 25 mm (1 inch) wide minimum.

T503.3 specifies the minimum clear opening at doorways with steps on over-the-road buses. The revisions to this section are editorial only, and the technical requirements are the same as in the 1991 guidelines: 760 mm (30 inches) from the lowest step tread to a height 1220 mm (48 inches) above the lowest step tread. Where compliance is not structurally feasible, the clear opening is permitted to be 685 mm (27 inches). The clear opening is permitted to taper to 457 (18 inches) from a height 1220 mm (48 inches) above the lowest step tread to the top of the doorway. Hinges and other door mechanisms are permitted to protrude 100 m (4 inches) maximum into the clear opening.

T504 Steps

T504.2 requires step tread surfaces to comply with the technical requirements for surfaces in T802, which are further discussed under that section. T504.3 clarifies the current requirement for contrasting strips at step tread edges by specifying the minimum width of the strips: 25 mm (1 inch).

T505 Handrails, Stanchions, and Handholds

The revisions to the technical requirements for handrails, stanchions, and handholds in T505 are editorial only, and the requirements are the same as in the 1991 guidelines. T505.2 specifies that handrails and stanchions at doorways be configured so that passengers with disabilities can grasp them from outside the vehicle and use them throughout the boarding and alighting process. T505.3 specifies that handrails at fare collection devices be configured so that passengers with disabilities can use them for support when using the fare collection device. T505.4 specifies that handrails and stanchions along circulation paths be configured so that passengers with disabilities can use them when moving through the vehicle. T505.5 specifies that handholds and stanchions on the backs of forward and rear facing seats be located directly adjacent to the aisle so that passengers with disabilities can use them when moving from the aisles to the seats.

Chapter T6: Circulation Paths and Doorways on Rail Vehicles [Reserved]

The technical requirements for circulation paths and doorways on rail vehicles will be included in Chapter T6 when the guidelines for rail vehicles are revised.

Chapter T7: Communication Features

T701 General

This section states that the technical requirements for communication features in Chapter T7 apply where required by the scoping requirements in Chapter T2.

T702 Signs

T702 revises the technical requirements for characters on signs to be consistent with the accessibility guidelines for buildings and facilities. The technical requirements address character proportions, character height, stroke thickness, character spacing, line spacing, and contrast.

T703 International Symbol of Accessibility

T703 adds new technical requirements for the International Symbol of Accessibility, and specifies that the symbol have a background field of at least 100 mm (4 inches) and a non-glare finish, and contrast with its background.

T704 Automated Stop and Route Announcements

The technical requirements for automated stop and route announcements in T704 are discussed under Proposed Changes That Received Substantial Comment.

T705 Stop Request Systems

T705.1 clarifies the technical requirements for audible and visible indicators for stop request systems. Audible stop indicators can be verbal or non-verbal signals. Visible stop indicators can be a light or sign. T705.2 clarifies the location of operable parts for stop request systems at wheelchair spaces, and specifies that the operable parts be located on a side wall or partition 610 mm (24 inches) minimum and 915 mm (36 inches) maximum from the back of the wheelchair space.

Chapter T8: Other Features

T801 General

This section states that the technical requirements for other features in Chapter T8 apply where required by the scoping requirements in Chapter T2 or where referenced in another technical requirement.

T802 Surfaces

T802 contains the technical requirements for surfaces. These requirements are referenced in: T203.4.1 for all circulation paths; T302.5.1 for lift platforms; T303.5 for ramps and bridgeplates; T402.2 for wheelchair spaces; and T504.2 for step treads.

T802.2 requires surfaces to be slip resistant. The 1991 guidelines contain the same requirement.

T802.3 specifies that openings in surfaces not allow the passage of a sphere more than 16 mm (⅝ inch) in diameter, and that elongated openings be placed so that the long dimension is perpendicular to the direction of travel. Cut-outs are permitted in lift platforms that are folded and stowed manually and in ramps and bridgeplates that are deployed manually for the operator to grasp the surface. The 1991 guidelines contain similar requirements for lift platforms.

T802.4 permits protrusions on surfaces to be 6.4 mm (¼ inch) high maximum. The 1991 guidelines contain the same requirement for lift platforms and ramps.

T802.5 addresses differences in levels between two adjacent surfaces, which are referred to as surface discontinuities. Surface discontinuities can be up to 6.4 mm (¼ inch) high without beveled edge treatment, and up to 13 mm (½ inch) high with beveled edge treatment. The 1991 guidelines contain the same requirement for thresholds at lift platforms and ramps. T802.5 modifies the requirement for beveled edge treat by specifying that the bevel extend across the entire surface discontinuity.

T803 Doorway Lighting

T803 addresses doorway lighting and specifies illuminance levels at lift platforms, ramps and bridgeplates, steps, and boarding and alighting areas adjacent to doorways. The illuminance levels are the same as specified in the 1991 guidelines except for lift platforms, which is modified to be consistent with the illuminance levels in the Federal Motor Vehicle Safety Standards for lifts on motor vehicles.

T804 Additional Requirements for Handrails, Stanchions, and Handholds

T804 contains additional technical requirements for handrails, stanchions, and handholds. T804.2 simplifies the requirements for edges by requiring them to be rounded. T804.3 modifies the requirements for cross section to be consistent with the accessibility guidelines for buildings and facilities. The revisions to the requirements in T804.4 on clearances and in T804.5 on structural strength of handrails on lift platforms are editorial only, and those requirements are the same requirement as in the 1991 guidelines.

T805 Operable Parts

T805 contains technical requirements for operable parts. These requirements are referenced in: T706.2 for stop request systems and T806 for fare collection devices.

T805.2 modifies the location height for operable parts: 610 mm (24 inches) minimum and 1220 mm (48 inches) maximum above the floor.

T805.3 requires operation without tight grasping, pinching, or twisting of the wrist and a maximum activation force of 22.5 N (5 pounds). The 1991 guidelines contain the same requirements for stop request systems.

T806 Fare Collection Devices

T806 requires fare collection devices to comply with the technical requirements for operable parts in T805, and the operable parts on fare collection devices to be located so that a wheelchair can approach within 255 mm (10 inches) maximum.

Regulatory Process Matters

Executive Order 12866: Regulatory Planning and Review

This proposed rule is a significant regulatory action under Executive Order 12866 and has been reviewed by the Office of Management and Budget. The Access Board prepared a report to estimate the costs of requiring public transit agencies that operate 100 or more buses in annual maximum service in fixed route systems to provide automated stop and route announcements on buses that are more than 6.7 m (22 feet) in length and operate in fixed route systems. The report is available on the Access Board's Web site at: *http://www.access-board.gov/transit/*. The report is discussed under Proposed Changes That Received Substantial Comment. Vehicle manufacturers and transit operators are requested to provide information in Questions 1 through 21 on the feasibility and costs of the other proposed changes. The Access Board will consider this information along with other comments on the proposed rule when preparing the final rule and will prepare additional costs estimates based on the information provided, as appropriate.

Regulatory Flexibility Act: Initial Regulatory Flexibility Analysis

The Access Board prepared the following initial regulatory flexibility analysis to describe how the proposed rule affects small entities.

Legal Basis, Objectives, and Reasons for Revising and Updating the Guidelines

The Americans with Disabilities Act requires the Access Board to issue guidelines for transportation vehicles that are readily accessible to and usable by individuals with disabilities. The Access Board initially issued accessibility guidelines for transportation vehicles in 1991. The proposed rule revises and updates the accessibility guidelines for buses, over-the-road buses, and vans. The objectives for revising the guidelines are discussed in the preamble. Proposed changes that received substantial comment when drafts of the proposed rule were made available are discussed at the beginning of the preamble, including the reasons for each of the proposed changes. The other revisions to the guidelines are discussed after the proposed changes that received substantial comment. Most of these revisions are editorial only and restate current requirements in plain language that is clear and easy to understand.

Small Entities Affected

Small public entities (*i.e.,* State or local government units with a population of less than 50,000) and small private entities (*i.e.,* small businesses that meet the size standards established by the Small Business Administration) are affected by the Access Board's guidelines to the extent that they are subject to the Americans with Disabilities Act and the Department of Transportation regulations implementing the

Americans with Disabilities Act. The Department of Transportation regulations apply to the following entities:

- Public entities that provide designated public transportation (*i.e.,* general or special transportation service, including charter service, provided to the general public on a regular and continuing basis), excluding public school transportation. 49 CFR 37.21 (a) (1) and 37.27 (a).
- Private entities that provide specified public transportation (*i.e.,* general or special transportation service, including charter service, provided to the general public on a regular and continuing basis). 49 CFR 37.21 (a) (2).
- Private entities that are not primarily engaged in the business of transporting people but operate a demand responsive or fixed route system. 49 CFR 37.21 (a) (3).

Reporting and Recordkeeping Requirements, Other Compliance Requirements, and Significant Alternatives

There are no reporting or recordkeeping requirements. Proposed changes that received substantial comment when drafts of the proposed rule were made available are discussed at the beginning of the preamble. Questions 1 through 21 request comments on the proposed changes, including information on the feasibility and costs on the proposed changes. The following questions may be of interest to small entities:

- Questions 1 through 6 request information on the feasibility and costs associated with the proposed 1:6 maximum slope requirement for buses and vans equipped with ramps, as well as alternatives.
- Questions 7, 8, and 9 requests information on the feasibility and costs associated with the proposed 34 inches minimum clear width requirement for circulation paths connecting wheelchair spaces to doorways that provide accessible boarding, and alternative performance specifications and test methods.
- Questions 11 and 12 request information on the feasibility and costs associated with the proposed requirements for maneuvering clearances at wheelchair spaces.
- Questions 13 and 14 request information on costs associated with proposed changes to the technical requirements for wheelchair securement systems on large vehicles with a gross vehicle weight rating 30,000 pounds or more.
- Question 17 requests information from private entities who contract with public transit agencies that operate 100 or more buses in annual maximum service in fixed route systems and acquire buses to operate in the fixed route systems under contract with the public transit agencies regarding the proposed requirement for automated stop and route announcements.

Comments are also requested on alternatives to any of the new or modified requirements in the proposed rule. The Access Board will consider the comments and information on the proposed changes when preparing the final rule and final regulatory flexibility analysis, and will prepare additional cost estimates, as appropriate.

Other Applicable Federal Rules

The Americans with Disabilities Act requires the Department of Transportation to issue regulations to implement the transportation provisions of the statute. The Department of Transportation regulations include accessibility standards for transportation vehicles that are consistent with the Access Board's transportation vehicle guidelines. The Department of Transportation's regulations are legally enforceable. The Department of Transportation will conduct a separate rulemaking to amend its regulations so that the accessibility standards included in the regulations are consistent with the revisions to Access Board's transportation vehicle guidelines. When the Department of Transportation amends its regulations, the Department of Transportation will establish the effective date for the revised accessibility standards.

Executive Order 13132: Federalism

The proposed rule adheres to the fundamental federalism principles and policy making criteria in Executive Order 13132. The proposed rule revises and updates guidelines issued under the Americans with Disabilities Act, civil rights legislation that was enacted by Congress pursuant to its authority to enforce the Fourteenth Amendment to the U.S. Constitution and to regulate commerce. The Americans with Disabilities Act was enacted "to provide a clear and comprehensive national mandate for the elimination of discrimination against individuals with disabilities" and "to ensure that the Federal government plays a central role in enforcing the standards established in this chapter on behalf of individuals with disabilities. 42 U.S.C. 12101 (b) (1) and (3). The Americans with Disabilities Act recognizes the authority of State and local governments to enact and enforce laws that "provide for greater or equal protection for the rights of individuals with disabilities than are afforded by this chapter." 42 U.S.C. 12201 (b). The Access Board made drafts of the proposed rule available for public review and comment. State and local governments, including public transit agencies, provided comments on the proposed changes. As discussed in the preamble, the comments were considered and changes were made to the proposed rule based on the comments.

Unfunded Mandates Reform Act

The Unfunded Mandates Reform Act does not apply to proposed or final rules that enforce constitutional rights of individuals or enforce statutory rights that prohibit discrimination on the basis of race, color, sex, national origin, age, handicap, or disability. Since the proposed rule is issued under the Americans with Disabilities Act, which prohibits discrimination on the basis of disability, an assessment of the rule's effect on State, local, and tribal governments, and the private sector is not required by the Unfunded Mandates Reform Act.

List of Subjects in 36 CFR Part 1192

Civil rights, Individuals with disabilities, Transportation.

David M. Capozzi,
Executive Director.

For the reasons stated in the preamble, the Access Board proposes to amend 36 CFR part 1192 as follows:

PART 1192—AMERICANS WITH DISABILITIES ACT (ADA) ACCESSIBILITY GUIDELINES FOR TRANSPORTATION VEHICLES

1. The authority citation for 36 CFR part 1192 continues to read as follows:

Authority: 42 U.S.C. 12204.

2. Amend part 1192 by revising subpart B to read as follows:

Subpart B—Buses, Over-the-Road Buses, and Vans

§ 1192.21 Accessibility guidelines.

The accessibility guidelines for buses, over-the-road buses, and vans are set forth in the Appendix to this part. The guidelines apply to the acquisition of new, used, and remanufactured transportation vehicles, and the remanufacture of existing transportation vehicles to the extent required by regulations issued by the Department of Transportation pursuant to the Americans with Disabilities Act at 49 CFR part 37.

Subpart G—[Removed]

3. Amend part 1192 by removing subpart G.

Subpart F—[Redesignated as Subpart G]

4. Amend part 1192 by redesignating subpart F as subpart G.

5. Revise the appendix to part 1192 to read as follows:

Appendix to Part 1192—Americans With Disabilities Act (ADA) Accessibility Guidelines for Transportation Vehicles

BILLING CODE 8150–01–P

TABLE OF CONTENTS

APPENDIX TO PART 1192 — AMERICANS WITH DISABILITIES ACT (ADA) ACCESSIBILITY GUIDELINES FOR TRANSPORTATION VEHICLES

CHAPTER T1: APPLICATION AND ADMINISTRATION 1

T101 General 1
T102 Equivalent Facilitation 1
T103 Conventions 1
T104 Definitions 2

CHAPTER T2: SCOPING REQUIREMENTS 3

T201 General 3
T202 Reduction in Access Prohibited 3
T203 Buses, Over-the-Road Buses, and Vans 3

CHAPTER T3: BOARDING DEVICES 8

T301 General 8
T302 Lifts 8
T303 Ramps and Bridgeplates 11

CHAPTER T4: WHEELCHAIR SPACES AND SECUREMENT SYSTEMS 14

T401 General 14
T402 Wheelchair Spaces 14
T403 Wheelchair Securement Systems 16
T404 Seat Belts and Shoulder Belts 18

CHAPTER T5: CIRCULATION PATHS AND DOORWAYS ON BUSES, OVER-THE-ROAD BUSES, AND VANS 19

T501 General 19
T502 Circulation Paths 19
T503 Doorways 20
T504 Steps 21
T505 Handrails, Stanchions, and Handholds 21

CHAPTER T6: CIRCULATION PATHS AND DOORWAYS ON RAIL VEHICLES [Reserved]

CHAPTER T7: COMMUNICATION FEATURES 22

T701 General 22
T702 Signs 22
T703 International Symbol of Accessibility 22
T704 Automated Stop and Route Announcements 23
T705 Stop Request Systems 23

CHAPTER T8: OTHER FEATURES 24

T801 General 24
T802 Surfaces 24
T803 Doorway Lighting 25
T804 Additional Requirements for Handrails, Stanchions, and Handholds 25
T805 Operable Parts 26
T806 Fare Collection Devices 27

CHAPTER T1: APPLICATION AND ADMINISTRATION

T101 General. This document contains scoping and technical requirements for vehicles that are readily accessible to and usable by individuals with disabilities. The requirements apply to the acquisition of new, used, and remanufactured vehicles and the remanufacture of existing vehicles to the extent required by regulations in 49 CFR Part 37 issued by the Department of Transportation under the Americans with Disabilities Act of 1990 (ADA).

> **Advisory T101 General.** The Department of Transportation has issued regulations under the Americans with Disabilities Act that contain additional requirements regarding nondiscrimination in the provision of transportation services to individuals with disabilities. Transit operators must comply with the Department of Transportation regulations, in addition to this document.

T102 Equivalent Facilitation. The requirements in this document do not prevent the use of alternative designs and technologies that result in substantially equivalent or greater accessibility and usability. The Department of Transportation regulations contain procedures in 49 CFR §37.7 for determining whether alternative designs and technologies provide equivalent facilitation.

T103 Conventions

T103.1 Dimensions. Dimensions that are not stated as maximum or minimum are absolute.

T103.2 Tolerances. All dimensions are subject to conventional industry tolerances for manufacturing processes, material properties, and field conditions.

> **Advisory T103.2 Tolerances.** Tolerances are not intended to be variances that can be used in design. Information on specific tolerances may be available from industry or trade organizations and published references.

T103.3 Figures. Figures are provided for informational purposes only, except for Figure T703.

T103.4 Units of Measurement. Measurements are stated in metric and U.S. customary units. The values stated in each system (metric or U.S. customary units) may not be exact equivalents, and each system shall be used independently of the other.

> **Advisory T103.4 Units of Measurement.** Users should work entirely within one system of measurement, either metric or U.S. customary units. Combining values from the two systems may result in non-compliance.

T103.5 Vehicle Length. The length of buses, over-the-road buses, and vans is measured from standard bumper to standard bumper, exclusive of any additional protrusions.

> **Advisory T103.5 Vehicle Length.** Vehicle length is measured with the vehicle as supplied by the original equipment manufacturer. After manufacture additions such as bicycle racks are not included when measuring vehicle length.

T104 Definitions

T104.1 General. For the purpose of this document, the terms defined in T104.4 have the indicated meaning. Terms used in this document that are defined in regulations issued by the Department of Transportation at 49 CFR 37.3 have the meaning indicated in those regulations.

> **Advisory T104.1 General.** The following terms that are used in this document are defined in the Department of Transportation regulations: accessible, bus, fixed route system, new vehicle, public entity, over-the-road bus, remanufactured vehicle, used vehicle, and wheelchair.

T104.2 Undefined Terms. The meaning of terms not specifically defined in T104.4 or in regulations issued by the Department of Transportation shall be as defined by collegiate dictionaries in the sense that the context implies.

T104.3 Interchangeability. Words, terms, and phrases used in the singular include the plural; and words, terms, and phrases used in the plural include the singular.

T104.4 Defined Terms.

Boarding device. A lift, ramp, or bridgeplate.

Bridgeplate. A short plate or short ramp designed to bridge a horizontal or vertical gap between a vehicle floor and a station platform, or between a vehicle floor and a lift platform.

Level boarding bus system. A system in which buses operate where some or all of the designated stops have station platforms, and the design of the station platforms and the vehicles are coordinated to provide level boarding.

Operable part. A component of a device or system used to insert or withdraw objects, or to activate, deactivate, adjust, or connect to the device or system. Operable parts include, but are not limited to, buttons, levers, knobs, smart card targets, coin and card slots, pull-cords, jacks, data ports, electrical outlets, and touch screens.

Surface discontinuities. Differences in level between two adjacent surfaces.

CHAPTER T2: SCOPING REQUIREMENTS

T201 General. New, used, and remanufactured vehicles shall comply with the scoping requirements in Chapter T2 to the extent required by regulations in 49 CFR Part 37 issued by the Department of Transportation under the Americans with Disabilities Act of 1990 (ADA).

T202 Reduction in Access Prohibited. Modifications to an accessible vehicle shall not decrease or have the effect of decreasing the accessibility of the vehicle below the requirements of this document that are in effect at the time of the modification.

T203 Buses, Over-the-Road Buses, and Vans

T203.1 General. Buses, over-the-road buses, and vans shall comply with T203.

T203.2 Accessible Boarding. Vehicles shall provide accessible boarding in accordance with T203.2.

T203.2.1 Minimum Requirement for All Vehicles. All vehicles shall provide in at least one doorway lifts or ramps that are capable of being deployed to all designated stops on the route to which the vehicle is assigned and to the roadway.

T203.2.1.1 Lifts. Lifts shall comply with T302.

T203.2.1.2 Ramps. Ramps shall comply with T303. Ramps provided on vehicles more than 6.7 m (22 feet) in length shall be permanently installed and power operated. Vehicles that operate only in level boarding bus systems where all the designated stops have station platforms shall be permitted to provide on board the vehicle portable ramps that are capable of being deployed to the roadway.

T203.2.2 Additional Requirements for Level Boarding Bus Systems. Vehicles operating in level boarding bus systems shall comply with the additional requirements in T203.2.2.

T203.2.2.1 Vehicle Floor and Station Platform Coordination. The design of the vehicles shall be coordinated with the station platforms to minimize the gap between the vehicle floor and the station platforms.

T203.2.2.2 Ramps and Bridgeplates. Where the gap between the vehicle floor and the station platforms is greater than 51 mm (2 inches) horizontally or 16 mm (5/8 inch) vertically when measured at 50 percent passenger load with the vehicle at rest, vehicles shall provide ramps or bridgeplates that are capable of being deployed to the station platforms in accordance with T203.2.2.2. Ramps and bridgeplates shall comply with T303, and shall be permanently installed and power operated.

Advisory T203.2.2.2 Ramps and Bridgeplates. Ramps provided to comply with T203.2.1 can be used to comply with T203.2.2.2. T303.8.1 requires that ramps provided to comply with T203.2.1 must have slopes not steeper than 1:6 (17 percent) when deployed at stops without station platforms and to the roadway. T303.8.2 requires that ramps and bridgeplates provided to comply with T203.2.2.2 must have slopes not steeper than 1:8 (12.5 percent) when deployed to station platforms. Additional advisory information on ramp and bridgeplate slopes is provided in Advisory T303.8.1.

T203.2.2.2.1 Doorways on One Side of Vehicle. Where doorways are provided on one side of the vehicle to serve station platforms, vehicles shall provide ramps or bridgeplates in at least one doorway.

T203.2.2.2.2 Doorways on Two Sides of Vehicle. Where doorways are provided on two sides of the vehicle to serve station platforms, vehicles shall provide ramps or bridgeplates in at least one doorway on each side of the vehicle.

Advisory T203.2.2.2.2 Doorways on Two Sides of Vehicle. Vehicles operating in level boarding bus systems with center and side station platforms provide doorways on two sides of the vehicle to serve the station platforms.

T203.3 Wheelchair Spaces. Vehicles shall provide wheelchair spaces complying with T402 in accordance with T203.3.

Advisory T203.3 Wheelchair Spaces. T203.8 requires vehicles to provide securement systems at each wheelchair space. T403.2 requires securement systems to secure wheelchairs so that the occupant faces the front or rear of the vehicle. Side facing securement is not permitted.

T203.3.1 Large Vehicles. Vehicles more than 6.7 m (22 feet) in length shall provide at least two wheelchair spaces.

T203.3.2 Small Vehicles. Vehicles 6.7 m (22 feet) or less in length shall provide at least one wheelchair space.

T203.3.3 Location. Wheelchair spaces shall be located as near as practicable to doorways that provide accessible boarding complying with T203.2.

T203.3.4 Signs. Wheelchair spaces shall be identified by the International Symbol of Accessibility complying with T703.

T203.4 Circulation Paths. Circulation paths on vehicles shall comply with T203.4.

T203.4.1 Surfaces. All circulation path surfaces shall comply with T802.

T203.4.2 Wheelchair Spaces. Circulation paths shall connect each wheelchair space to doorways in accordance with T203.4.2. Circulation paths connecting wheelchair spaces to doorways shall comply with T502.

T203.4.2.1 Doorways with Boarding Devices. On all vehicles, a circulation path shall connect each wheelchair space to a doorway with a boarding device that can be deployed to the roadway. Where a portable ramp is permitted to be provided on board a vehicle by T203.2.1.2, a circulation path shall connect each wheelchair space to a doorway where the portable ramp can be deployed to the roadway.

T203.4.2.2 Additional Requirements for Level Boarding Bus Systems. Vehicles operating in level boarding bus systems shall comply with the additional requirements in T203.4.2.2.

Advisory T203.4.2.2 Level Boarding Bus Systems. Vehicles operating in level boarding bus systems must comply with T203.4.2.1 and T203.4.2.2.

T203.4.2.2.1 Doorways on One Side of Vehicle. Where doorways are provided on one side of the vehicle to serve station platforms, a circulation path shall connect each wheelchair space to a doorway that provides accessible boarding complying with T203.2.2.

T203.4.2.2.2 Doorways on Two Sides of Vehicle. Where doorways are provided on two sides of the vehicle to serve station platforms, a circulation path shall connect each wheelchair space to a doorway on each side of the vehicle that provides accessible boarding complying with T203.2.2.

T203.5 Doorways. Doorways on vehicles shall comply with T203.5.

T203.5.1 Doorways with Lifts or Ramps. Doorways with lifts or ramps shall comply with T503.1.

T203.5.2. Doorways with Level Entry Boarding. Doorways with level entry boarding shall comply with T503.2.

T203.5.3 Doorways on Over-the-Road Buses. On over-the-road buses, doorways with steps shall comply with T503.3.

T203.5.4 Signs. Doorways that provide accessible boarding complying with T203.2 shall be identified on the exterior of the vehicle by the International Symbol of Accessibility complying with T703. Where all the doorways provide accessible boarding complying with T203.2, the doorways shall not be required to be identified by the International Symbol of Accessibility.

T203.5.5 Lighting. Where lighting is provided at doorways, lighting shall comply with T803.

T203.6 Steps. Steps on vehicles shall comply with T504.

T203.7 Handrails, Stanchions, and Handholds. Vehicles shall provide handrails, stanchions, and handholds complying with T505 in accordance with T203.7.

T203.7.1 All Vehicles. All vehicles shall provide handrails and stanchions at passenger doorways, at fare collection devices where provided on vehicles, and along all circulation paths.

T203.7.2 Large Vehicles. Vehicles more than 6.7m (22 feet) in length shall provide handholds, stanchions, or handrails at forward and rear facing seats in accordance with T203.7.2.

T203.7.2.1 Non-Reclining Low-Back Seats. Handholds or stanchions shall be provided on the back of non-reclining low-back seats.

T203.7.2.2 Reclining High-Back Seats. Handrails shall be provided overhead or on overhead luggage racks at reclining high back seats.

T203.8 Wheelchair Securement Systems. Vehicles shall provide wheelchair securement systems complying with T403 at each wheelchair space.

T203.9 Seat Belts and Shoulder Belts. Vehicles shall provide seat belts and shoulder belts complying with T404 at each wheelchair space.

T203.10 Seats. Seats on vehicles shall comply with T203.10.

T203.10.1 Priority Seats. Vehicles operated in fixed-route systems shall designate at least two seats as priority seats for passengers with disabilities. The priority seats shall be located as near as practicable to a doorway that is used for both boarding and alighting. Where aisle facing seats and forward facing seats are provided, one of the priority seats shall be an aisle facing seat, and one of the priority seats shall be a forward facing seat.

T203.10.2 Signs. Priority seats required by T203.10.1 shall be identified by signs complying with T702 that inform other passengers to make the seats available to passengers with disabilities.

T203.10.3 Aisle Seats on Over-the-Road Buses. Where armrests are provided on the aisle side of seats on over-the-road buses, the aisle seats shall comply with T203.10.3.

T203.10.3.1 Moveable or Removable Seats. Folding or removable armrests shall be provided on the aisle side of all moveable or removable seats at wheelchair spaces.

T203.10.3.2 Fixed Seats. Folding or removable armrests shall be provided on the aisle side of at least 25 percent of all fixed aisle seats.

T203.11 Destination and Route Signs. Where signs displaying destination or route information are provided on the exterior of a vehicle, the signs shall be provided on the front and boarding side of the vehicle. The signs shall be illuminated and shall comply with T702.

T203.12 Public Address System. Vehicles more than 6.7 m (22 feet) in length that operate in fixed route systems and stop at multiple designated stops shall provide a public address system to announce stops and provide other passenger information within the vehicle.

T203.13 Automated Stop and Route Announcements. Public entities that operate 100 or more buses in annual maximum service in fixed route systems, as reported in the National Transit Database in accordance with 49 CFR Part 630, shall provide automated stop and route announcements complying with T704 on buses that are more than 6.7 m (22 feet) in length and operate in fixed route systems.

T203.14 Stop Request Systems. Vehicles more than 6.7 m (22 feet) in length that operate in fixed route systems and stop at multiple designated stops on passenger request shall provide stop request systems complying with T705.

T203.15 Fare Collection Devices. Where fare collection devices are provided on vehicles, fare collection devices shall comply with T806.

CHAPTER T3: BOARDING DEVICES

T301 General. The technical requirements in Chapter T3 shall apply where required by Chapter T2.

T302 Lifts

T302.1 General. Lifts shall comply with T302.

> Advisory T302.1 General. The National Highway Traffic Safety Administration has established Federal Motor Vehicle Safety Standards (FMVSS) at 49 CFR § 571.403 and § 571.404 for lifts that are designed for use on motor vehicles. The FMVSS are generally consistent with T302. T302 has some requirements that are more stringent than the FMVSS, including openings in lift platform surfaces in T302.5.1 and T802.3, and transitions at the boarding edges of threshold ramps on lift platforms in T302.5.5 and T802.5. T302 also has some requirements that are not addressed in the FMVSS, including door releases for manual operation of lifts in T302.4, boarding direction in T302.5.9, and use by standees in T302.5.10.

T302.2 Design Load. The lift design load shall be 273 kg (600 pounds) minimum. Load carrying components that are subject to wear shall have a design safety factor of at least six, based on the ultimate strength of the material. Other components that are not subject to wear shall have a design safety factor of at least three, based on the ultimate strength of the material.

T302.3 Controls. Lift controls shall comply with T302.3.

T302.3.1 Interlocks. Lift controls shall be interlocked with the vehicle brakes, transmission, propulsion system, or door, or shall provide other systems to prevent the vehicle from moving when the lift is not stowed. Lift controls shall not be operable unless the interlocks are engaged.

T302.3.2 Sequence. Lift controls shall be of a momentary contact type requiring continuous manual pressure. Lift controls shall permit the operator to change the operation sequence. Lift controls shall not permit the lift platform to be folded, retracted, or stowed when occupied, unless the platform is designed to be occupied when stowed in the passenger area of the vehicle.

> Advisory T302.3.2 Sequence. A rotary lift is an example of a lift platform that is designed to be occupied when the platform is rotated into a stowed position in the passenger area of the vehicle.

T302.4 Manual Operation. Lifts shall be capable of being operated manually if the power to the lift fails. The manual operation shall be safe for the occupant and operator when operated according to the manufacturer's instructions. When operated manually, the lift platform shall deploy and lower to the boarding and alighting area or the roadway with an occupant; shall rise to the vehicle floor without an occupant; and shall stow. The lift platform shall not fold, retract, or stow when occupied, unless the platform is designed to be occupied when stowed in the passenger area of the vehicle. Doors that must be opened to allow the lift to operate shall have interior and exterior manual releases.

T302.5 Platforms. Lift platforms shall comply with T302.5.

T302.5.1 Surfaces. Lift platform surfaces shall comply with T802.

T302.5.2 Size. The lift platform clear width shall be 720 mm (28½ inches) minimum measured at the platform surface, and 760 mm (30 inches) minimum measured from 51 mm (2 inches) above the platform surface to 1015 mm (40 inches) minimum above the platform surface. The lift platform clear length shall be 1015 mm (40 inches) minimum measured at the platform surface and 1220 mm (48 inches) minimum measured from 51 mm (2 inches) above the platform surface to 1015 mm (40 inches) above the platform surface.

Advisory T302.5.2 Size. A surface width of 720 mm (28.5 inches) minimum is specified for the lift platform to accommodate some protrusions for handrail attachment brackets. A wider lift platform is recommended because it is more usable by passengers who use wheelchairs, and accommodates a broader range of passengers with disabilities. The lift platform width should not exceed the clear opening of the doorway, or the clear width of the circulation path connecting the doorway to the wheelchair space.

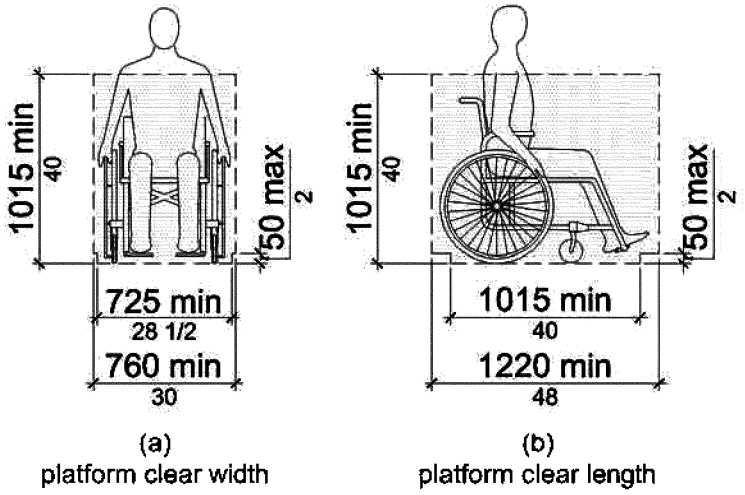

Figure T302.5.2
Size

T302.5.3 Edge Barriers. Lift platforms shall have edge barriers complying with Table T302.5.3 to prevent the wheels of wheelchairs from rolling off the platforms. Openings between lift platform surfaces and raised barriers shall not permit passage of a sphere 16 mm (5/8 inch) in diameter. Edge barriers shall not interfere with the maneuvering of wheelchairs.

Table T302.5.3 Lift Platform Edge Barriers

Side of Lift Platform	Edge Barrier Required
Side of lift platform used to enter and exit the platform at boarding and alighting area	Moveable barrier or supplementary system capable of preventing power wheelchairs from riding over or defeating the barrier or supplementary system. The barrier or supplementary system shall automatically raise or engage, and remain raised or engaged when the lift platform is more than 75 mm (3 inches) above the boarding and alighting area level. The barrier or supplementary system shall be permitted to be operated manually if an interlock or other design feature prevents the lift from operating unless the barrier or supplementary system is raised or engaged.
Side of lift platform used to enter and exit the vehicle	Moveable barrier or other design feature to prevent the wheels of wheelchairs from rolling off the lift platform when the platform is not at the vehicle floor level
Other sides of lift platform	Barriers 38 mm (1½ inches) high minimum

T302.5.4 Gaps. When the lift platform is at the vehicle floor level and any edge barrier is lowered, the gap between the platform surface and the vehicle floor shall not permit passage of a sphere 16 mm (5/8 inch) in diameter.

T302.5.5 Threshold Ramps. Threshold ramps from boarding and alighting areas to lift platforms and edge barriers used as threshold ramps shall have slopes not steeper than 1:8 (12.5 percent) for a rise of 75 mm (3 inches) maximum. The slope shall be measured when the lift platform is level. Surface discontinuities at transitions from boarding and alighting areas to threshold ramps shall comply with T802.5.

T302.5.6 Visual Contrast. The perimeter of the lift platform surface shall be outlined. The outline shall be 25 mm (1 inch) wide minimum and shall contrast visually with the rest of the platform surface either light-on-dark or dark-on-light.

T302.5.7 Deflection. When occupied, lift platforms shall be permitted to deflect 3 degrees maximum in any direction with respect to the platform's unloaded position, exclusive of vehicle roll or pitch.

T302.5.8 Movement. Lift platform movement shall comply with T302.5.8.

T302.5.8.1 Normal Operating Conditions. When occupied, lift platforms shall move at a rate of 150 mm/second (6 inches/second) maximum, and the horizontal and vertical acceleration shall be 0.3g maximum under normal operating conditions. When folding, retracting, or stowing, lift platforms shall move at a rate of 306 mm/second (12 inches/second) maximum under normal operating conditions, unless the platform is folded and stowed manually.

T302.5.8.2 Power or Equipment Failure. In the event of a power failure or single failure of any load carrying component, lift platforms that are occupied or are stowed in a vertical position shall move at rate of 306 mm/second (12 inches/second) maximum.

T302.5.9 Boarding Direction. Lift platforms shall permit passengers who use wheelchairs to board the platforms facing either toward or away from the vehicle.

> **Advisory T302.5.9 Boarding Direction.** Lift platforms must permit passengers who use wheelchairs to board the platforms facing toward or away from the vehicle because some passengers have significant difficulty backing up their wheelchairs. Transit operators may recommend, but not require, boarding the lift platform in a particular direction.

T302.5.10 Standees. Lift platforms shall be usable by passengers who use walkers, crutches, canes, or braces or who otherwise have difficulty using steps. Lift platforms shall be permitted to be marked to indicate a preferred standing position.

T302.5.11 Handrails. Lifts platforms shall have handrails complying with T804 on two sides of the platform that move in tandem with the platform to provide support for passengers in a standing position. Handrails shall have a usable gripping surface 205 mm (8 inches) long minimum. The gripping surface shall be 760 mm (30 inches) minimum and 965 mm (38 inches) maximum above the lift platform surface. Handrails shall not interfere with the maneuvering of wheelchairs.

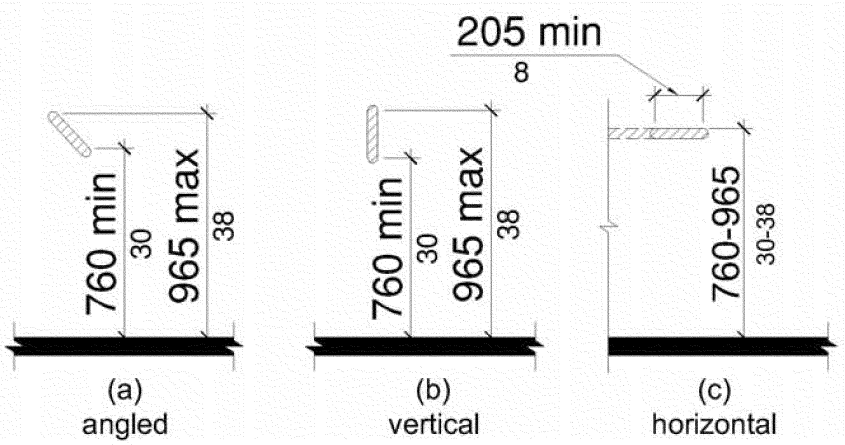

Figure T302.5.11
Handrails

T303 Ramps and Bridgeplates

T303.1 General. Ramps and bridgeplates shall comply with T303. Ramps and bridgeplates shall be permitted to fold or telescope if all the requirements of T303 are met.

T303.2 Design Load. The design load of ramps and bridgeplates 760 mm (30 inches) or more in length shall be 273 kg (600 pounds) minimum. The design load of ramps and bridgeplates less than 760 mm (30 inches) in length shall be 136 kg (300 pounds) minimum. Ramps and bridgeplates shall have a design safety factor of at least 3, based on the ultimate strength of the material.

> **Advisory T303.2 Design Load.** The design load is the weight the ramp or bridgeplate is designed to support without damage or permanent deformation. Some deflection may occur under maximum load.

T303.3 Attachment. When used for boarding and alighting, ramps and bridgeplates shall be firmly attached to the vehicle and shall not be subject to displacement from the vehicle.

T303.4 Emergency Operation. Power operated ramps and bridgeplates shall be capable of being operated manually and in a manner that is safe for the occupant and operator if the power fails.

T303.5 Surfaces. Ramp and bridgeplate surfaces shall comply with T802, and shall be uninterrupted from edge to edge.

> **Advisory T303.5 Surfaces.** Ramp and bridgeplate surfaces must be uninterrupted from edge to edge to accommodate three-wheel scooters. Expanded metal or perforated materials are permitted, as long as the openings comply with T802.3.

T303.6 Clear Width. The ramp and bridgeplate clear width shall be 760 mm (30 inches) minimum.

> **Advisory T303.6 Clear Width.** A wider ramp or bridgeplate is recommended because it is more usable by passengers who use wheelchairs, and accommodates a broader range of passengers with disabilities. The ramp or bridgeplate width should not exceed the clear opening of the doorway, or the clear width of the circulation path connecting the doorway to the wheelchair space.

T303.7 Edge Barriers. The edges of ramps and bridgeplates that are more than 75 mm (3 inches) above the boarding and alighting area level shall have barriers 51 mm (2 inches) high minimum.

T303.8 Slope. Ramp and bridgeplate slopes shall comply with T303.8 when measured at 50 percent passenger load.

> **Advisory T303.8 Slope.** The Department of Transportation regulations at 49 CFR 37.165(f) require vehicle operators to assist passengers with disabilities with the use of boarding devices, even if the vehicle operators must leave their seats. Providing ramps and bridgeplates with the least possible slope accommodates a broader range of passengers with disabilities and minimizes the need for assistance.

T303.8.1 General. Ramps and bridgeplates shall have slopes not steeper than 1:6 (17 percent) when deployed to boarding and alighting areas without station platforms and to the roadway.

T303.8.2 Station Platforms. Ramps and bridgeplates shall have slopes not steeper than 1:8 (12.5 percent) when deployed to station platforms.

T303.9 Transitions. Surface discontinuities at transitions from boarding and alighting areas to ramps and bridgeplates shall comply with T802.5.

T303.10 Visual Contrast. The perimeter of the ramp and bridgeplate surface shall be outlined. The outline shall be 25 mm (1 inch) wide minimum and shall contrast visually with the rest of the ramp and bridgeplate surface either light-on-dark or dark-on-light.

T303.11 Gaps. When deployed for boarding and alighting, gaps between the ramp or bridgeplate surface and vehicle floor shall not permit passage of a sphere more than 16 mm (5/8 inch) in diameter.

T303.12 Stowage. Where portable ramps or bridgeplates are permitted, a compartment, securement system, or other method shall be provided within the vehicle to stow the ramps and bridgeplates when not in use. When stowed in passenger areas, portable ramps and bridgeplates shall not pose a hazard to passengers, and shall not interfere with the maneuvering of wheelchairs.

CHAPTER T4: WHEELCHAIR SPACES AND SECUREMENT SYSTEMS

T401 General. The technical requirements in Chapter T4 shall apply where required by Chapter T2.

T402 Wheelchair Spaces

T402.1 General. Wheelchair spaces shall comply with T402.

T402.2 Surfaces. Wheelchair space surfaces shall comply with T802.

T402.3 Approach. One full unobstructed side of each wheelchair space shall adjoin or overlap a circulation path complying with T502.

T402.4 Size. Wheelchair spaces shall be 760 mm (30 inches) minimum by 1220 mm (48 inches) minimum. Where the wheelchair space is confined on all or part of three sides, additional maneuvering space complying with T402.4.1 or T402.4.2 shall be provided. Fold-down seats shall be permitted to occupy the wheelchair space and additional maneuvering space provided the spaces are not obstructed when the seats are in the up position. Fold-down seats shall be permitted to occupy the additional maneuvering space when the wheelchair space is occupied.

> **Advisory T402.4 Size.** Where wheelchair spaces are confined on all or part of three sides, such as against a side wall and between a fold-up seat and wheel housing, the additional space is needed only for maneuvering the wheelchair into and out of the area.

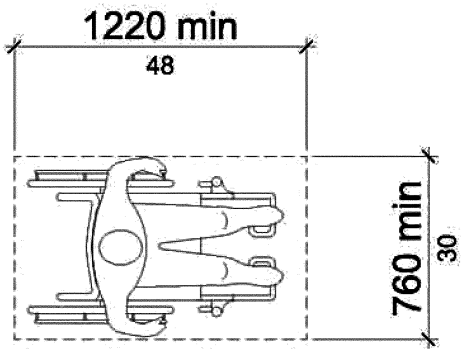

Figure T402.4
Size

T402.4.1 Front or Rear Entry. Where the short side of the wheelchair space is entered from the front or rear and the confined space is more than 610 mm (24 inches) deep, the wheelchair space and additional maneuvering space shall be 787 mm (31 inches) minimum by 1220 mm (48 inches) minimum.

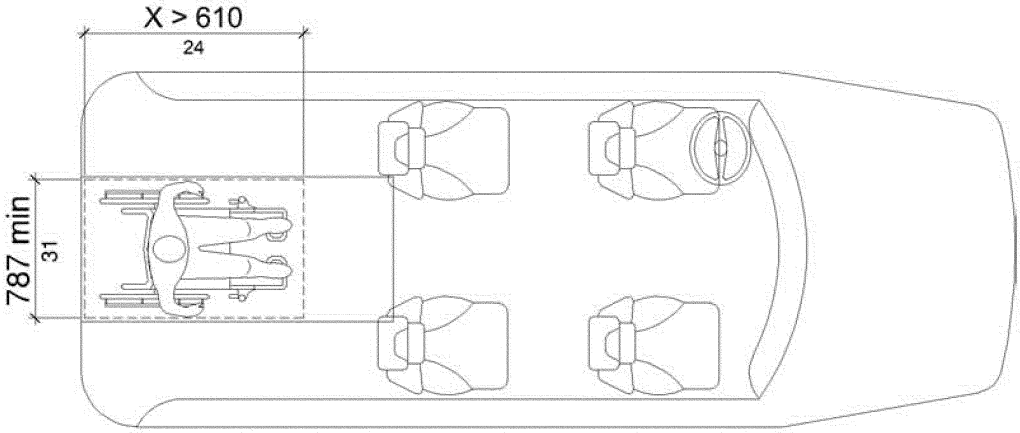

Figure T402.4.1
Front or Rear Entry

T402.4.2 Side Entry. Where the long side of the wheelchair space is entered from the side and the confined space is more than 380 mm (15 inches) deep, the wheelchair space and additional maneuvering space shall be 760 mm (30 inches) minimum by 1372 mm (54 inches) minimum.

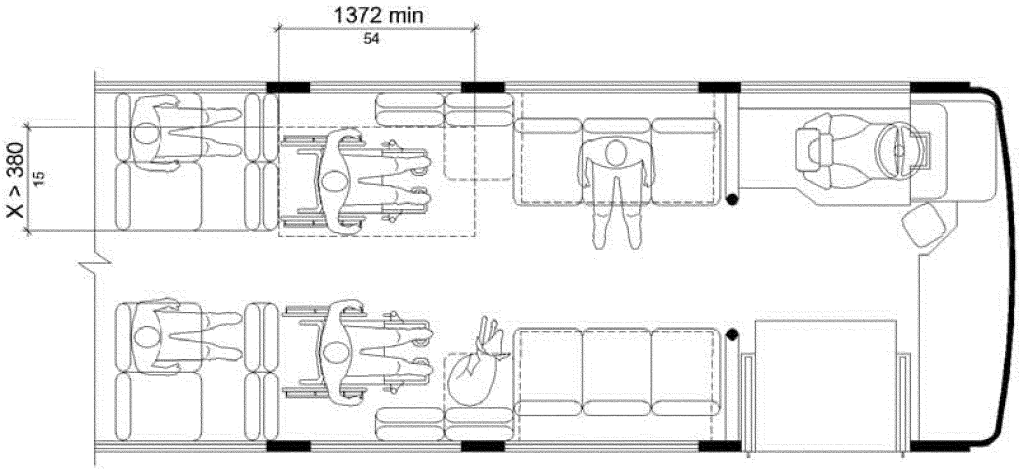

(a) forward facing

Figure T402.4.2
Side Entry

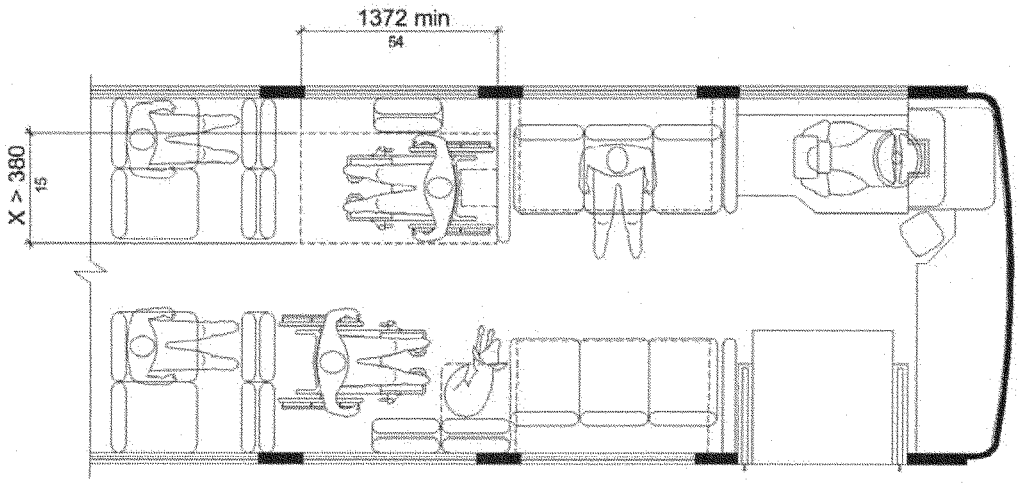

(b) rear facing

Figure T402.4.2
Side Entry

T403 Wheelchair Securement Systems

T403.1 General. Wheelchair securement systems, including attachments, shall comply with T403. Wheelchair securement systems shall be capable of securing wheelchairs that can enter and maneuver within an accessible vehicle. Wheelchair securement systems shall be automatic or easy to operate by a trained person.

T403.2 Orientation. Wheelchair securement systems shall secure the wheelchair so that the occupant faces the front or rear of the vehicle. On vehicles more than 6.7 m (22 feet) in length, at least one wheelchair securement system shall be front facing.

Advisory T403.2 Orientation. Side facing securement is not permitted.

T403.3 Design Force. Front and rear facing wheelchair securement systems shall comply with T403.2.1 or T403.2.2, as applicable.

T403.3.1 Large Vehicles. On vehicles with a gross vehicle weight rating of 13,608 kg (30,000 pounds) or more, wheelchair securement systems shall restrain a force in the forward longitudinal direction of 8,800 N (2,000 pounds) minimum for each wheelchair.

T403.3.2 Small Vehicles. On vehicles with a gross vehicle weight rating of less than 13,608 kg (30,000 pounds), wheelchair securement systems shall restrain a force in the forward longitudinal direction of 22,000 N (5,000 pounds) minimum for each wheelchair.

T403.4 Movement. Front and rear facing wheelchair securement systems shall limit the movement of an occupied wheelchair so that no part of the wheelchair that is in contact with the vehicle floor when initially secured in accordance with manufacturer's instructions moves more than 51 mm (2 inches) in any direction under normal vehicle operating conditions.

> **Advisory T403.4 Movement.** "In any direction" means no part of the wheelchair that is in contact with the vehicle floor when initially secured moves more than 51 mm (2 inches) horizontally, vertically, or in an arc. "Normal vehicle operating conditions" are specific to the area where the vehicle operates. Vehicles that operate in hilly terrain or on winding roads will have more severe constraints than those operating in flat areas.

T403.5 Rear Facing Securement Systems. Rear facing wheelchair securement systems shall comply with T403.5.

T403.5.1 Forward Excursion Barrier. A forward excursion barrier shall be provided to prevent an occupied wheelchair from moving toward the front of the vehicle. The barrier shall extend from the floor to a height of 610 mm (24 in) minimum for the full width of the wheelchair space.

> **Advisory T403.5.1 Forward Excursion Barrier.** The forward excursion barrier is located at the back of the wheelchair.

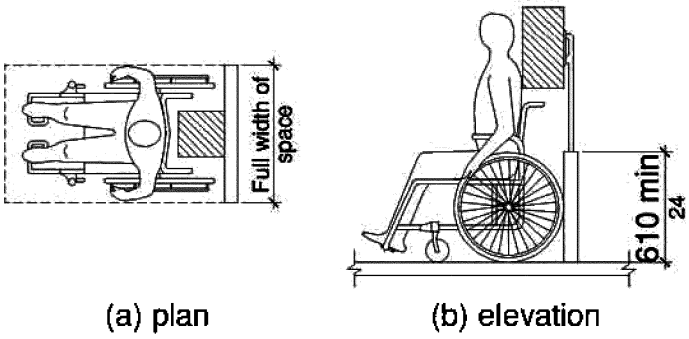

Figure T403.5.1
Forward Excursion Barrier

T403.5.2 Padded Head Rest. A padded head rest complying with T403.5.2 shall be provided above the forward excursion barrier.

> **Advisory T403.5.2 Padded Head Rest.** The padded head rest is intended to reduce the possibility of whiplash in a sudden stop. The padded head rest is positioned approximately in line with the plane of the wheelchair backrest, and the bottom edge of the head rest is positioned to be above the approximate height of the backrest. Many wheelchair users have backpacks on their wheelchairs. If the bottom edge of the padded head rest is below the top of the backrest, the head rest may encounter the backpack and prevent the wheelchair from being positioned close to the head rest.

T403.5.2.1 Width. The padded head rest shall be 255 mm (10 inches) wide minimum, and shall be centered on the wheelchair space.

T403.5.2.2 Height. The lower edge of the padded head rest shall be 965 mm (38 inches) minimum and 1016 mm (40 inches) maximum above the vehicle floor. The top edge of the padded head rest shall be 1420 mm (56 inches) minimum above the vehicle floor.

T403.5.2.3 Protrusion. The plane of the face of the padded head rest shall protrude into the wheelchair space 230 mm (9 inches) minimum and 305 mm (12 inches) maximum measured from the plane of the forward excursion barrier.

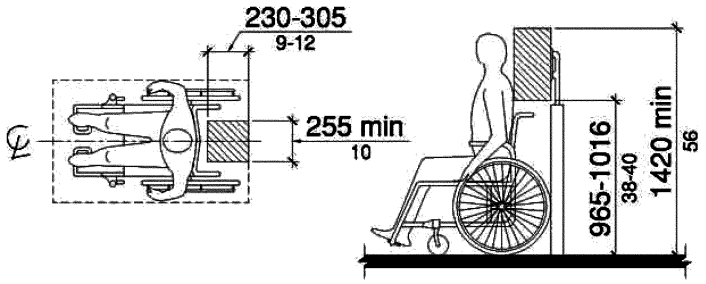

(a) plan (b) elevation

Figure 403.5.2
Padded Head Rest

T403.6 Stowage. When wheelchair securement systems are not in use, the systems shall not protrude into the wheelchair space except as provided in T403.5.2.3, and shall not interfere with passenger movement or pose a hazard. Wheelchair securement systems shall be reasonably protected from vandalism, and shall be readily accessed when needed for use.

T404 Seat Belts and Shoulder Belts. Seat belts and shoulder belts provided for passengers who use wheelchairs shall comply with 49 CFR § 571.209. Seat belts and shoulder belts shall not be used in place of wheelchair securement systems complying with T403 to secure wheelchairs to vehicles.

CHAPTER T5: CIRCULATION PATHS AND DOORWAYS ON BUSES, OVER-THE-ROAD BUSES, AND VANS

T501 General. The technical requirements in Chapter T5 shall apply where required by Chapter T2.

T502 Circulation Paths

T502.1 General. Circulation paths connecting wheelchair spaces to doorways shall comply with T502.

T502.2 Clear Width. The clear width of circulation paths connecting wheelchair spaces to doorways shall be 865 mm (34 inches) minimum from the vehicle floor to a height 1015 mm (40 inches) minimum above the vehicle floor. From a height 1015 mm (40 inches) minimum above the vehicle floor, the clear width of circulation paths shall be 760 mm (30 inches) minimum to the height specified in Table T502.

Table T502.2 Circulation Path Clear Width

Vehicle Length	Minimum Height Above 1015 mm (40 inches)
Vehicles 6.7 m (22 feet) or less	1420 mm (56 inches) above vehicle floor
Over-the-road buses	1650 mm (65 inches) above vehicle floor
Other vehicles more than 6.7 m (22 feet)	1725 mm (68 inches) above vehicle floor

Advisory T502.2 Clear Width. Using a 3D model or other computer design tool that depicts an occupied wheelchair moving from the vehicle doorway to the wheelchair space will help to ensure that the clear width of the circulation path complies with T502.2.

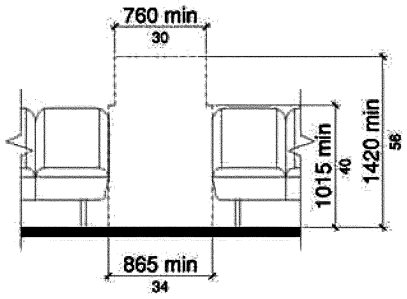

(a) vehicles 6.7 m or less

Figure T502.2
Clear Width

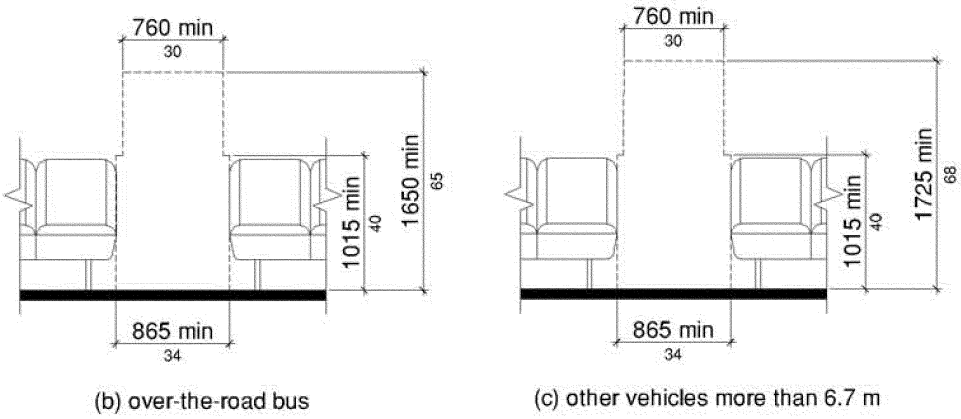

(b) over-the-road bus (c) other vehicles more than 6.7 m

Figure T502.2
Clear Width

T502.3 Features on Circulation Paths. Features on circulation paths connecting wheelchair spaces to doorways shall be located so as to not interfere with the maneuvering of wheelchairs. Stanchions located directly behind the driver seat shall terminate at the surface of aisle facing seats where provided, or shall be turned away from the circulation path below the driver seat. Where provided on vehicles, fare collection devices shall be located as close to the dashboard as possible.

T503 Doorways

T503.1 Doorways with Lifts or Ramps. The vertical clearance at doorways with lifts or ramps shall be in accordance with Table T503.1 measured vertically from the top of the door opening to the vehicle floor, or to the surface of the lift or to the highest point of the ramp when deployed to the vehicle floor level.

Table T503.1 Vertical Clearance at Doorways with Lifts or Ramps

Vehicle Length	Minimum Vertical Clearance
Vehicles 6.7 m (22 feet) or less	1420 mm (56 inches)
Over-the-road buses	1650 mm (65 inches)
Other vehicles more than 6.7 m (22 feet)	1725 mm (68 inches)

T503.2 Doorways with Level Entry Boarding. Doorways with level entry boarding shall comply with T503.2.

T503.2.1 Clear Width. Doorways shall provide a clear opening of 810 mm (32 inches) minimum.

T503.2.2 Thresholds. Thresholds at doorways shall be marked by a strip. The strip shall be 25 mm (1 inch) wide minimum and shall contrast visually with the rest of the circulation path surface either light-on-dark or dark-on-light.

T503.3 Doorways on Over-the-Road Buses. On over-the road buses, doorways with steps shall provide a clear opening 760 mm (30 inches) minimum from the lowest step tread to a height 1220 mm (48 inches) above the lowest step tread. Where compliance is not structurally feasible, the clear opening shall be permitted to be 685 mm (27 inches). The clear opening shall be permitted to taper to 457 mm (18 inches) minimum from a height 1220 mm (48 inches) above the lowest step tread to the top of the doorway. Hinges and other door mechanisms shall be permitted to protrude 100 mm (4 inches) maximum into the clear opening.

T504 Steps

T504.1 General. Steps shall comply with T504.

T504.2 Surfaces. Step tread surfaces shall comply with T802.

T504.3 Visual Contrast. The outer edge of step treads shall be marked by a strip. The strip shall be 25 mm (1 inch) wide minimum and shall contrast visually with the rest of the step tread or circulation path surface either light-on-dark or dark-on-light.

T505 Handrails, Stanchions, and Handholds

T505.1 General. Handrails, stanchions, and handholds shall comply with T505 and T804.

T505.2 Doorways. Handrails and stanchions at passenger doorways shall be configured so that passengers with disabilities can grasp the handrails and stanchions from outside the vehicle, and use the handrails and stanchions throughout the boarding and alighting process.

T505.3 Fare Collection Devices. Handrails at fare collection devices shall be configured so that passengers with disabilities can use the handrail for support when using the fare collection device.

T505.4 Circulation Paths. Handrails and stanchions along circulation paths shall be configured so that passengers with disabilities can use the handrails when moving through the vehicle.

T505.5 Seats. Handholds and stanchions on the backs of forward and rear facing seats shall be located directly adjacent to the aisle so that passengers with disabilities can use the handholds and handrails when moving from the aisles to the seats.

CHAPTER T6: CIRCULATION PATHS AND DOORWAYS ON RAIL VEHICLES [Reserved]

CHAPTER T7: COMMUNICATION FEATURES

T701 General. The technical requirements in Chapter T7 shall apply where required by Chapter T2.

T702 Signs

T702.1 General. Characters on signs shall comply with T702.

T702.2 Character Proportions. Characters shall be selected from fonts where the width of the uppercase letter "O" is 55 percent minimum and 110 percent maximum of the height of the uppercase letter "I".

T702.3 Character Height. Character height shall comply with Table T702.3. Character height shall be based on the uppercase letter “I”.

Table T702.3 Character Height

Sign	Minimum Character Height
Exterior route or destination signs on boarding side of vehicle	51 mm (2 inches)
Exterior route or destination signs on front of vehicle	100 mm (4 inches)
Interior signs designating wheelchair spaces or priority seats, where baseline of character is 1015 mm (40 inches) to 1780 mm (70 inches) above the vehicle floor	16 mm (5/8 inch)
Interior signs designating wheelchair spaces, priority seats, stop announcements, or stop requests where baseline of character is more than 1780 mm (70 inches) above the vehicle floor	51 mm (2 inches)

T702.4 Stroke Thickness. Stroke thickness of the uppercase letter "I" shall be 10 percent minimum and 30 percent maximum of the height of the character.

T702.5 Character Spacing. Character spacing shall be measured between the two closest points of adjacent characters, excluding word spaces. Spacing between individual characters shall be 10 percent minimum and 35 percent maximum of character height.

T702.6 Line Spacing. Spacing between the baselines of separate lines of characters within a message shall be 135 percent minimum and 170 percent maximum of the character height.

T702.7 Contrast. Characters shall contrast with their background with either light characters on a dark background or dark characters on a light background.

T703 International Symbol of Accessibility. The International Symbol of Accessibility shall comply with Figure T703. The symbol shall have a background field height of 100 mm (4 inches) minimum. The symbol and its background shall have a non-glare finish. The symbol shall contrast with its background with either a light symbol on a dark background or a dark symbol on a light background.

Figure T703
International Symbol of Accessibility

T704 Automated Stop and Route Announcements

T704.1 General. Automated stop and route announcements shall comply with T704, and shall use recorded or digitized human speech.

T704.2 Automated Stop Announcements. Automated stop announcements shall be audible and visible within the vehicle. Visible announcements shall be a sign complying with T702 at the front of the vehicle. Where rear facing wheelchair securement systems are provided, an additional sign complying with T702 shall be located within view of passengers facing the rear of the vehicle.

T704.3 Automated Route Announcements. Automated route announcements shall be audible at boarding and alighting areas.

T705 Stop Request Systems

T705.1 General. Stop request systems shall provide audible and visible indicators when passengers request a vehicle to stop at designated stops on the vehicle's assigned route. Audible indicators shall be verbal or non-verbal signals, and shall sound only once for each stop. Visible indicators shall be a light or sign complying with T702 at the front of the vehicle, and shall extinguish when the vehicle door opens at a stop.

T705.2 Operation. Stop request systems shall be operable at each wheelchair space and at priority seats for passengers with disabilities. Operable parts shall comply with T805. At wheelchair spaces, operable parts shall be located on a side wall or partition 610 mm (24 inches) minimum and 915 mm (36 inches) maximum from the side of the wheelchair space facing the back of a wheelchair secured in the wheelchair space.

CHAPTER T8: OTHER FEATURES

T801 General. The technical requirements in Chapter T8 shall apply where required by Chapter T2 or where referenced by a requirement in this document.

T802 Surfaces

T802.1 General. Surfaces shall comply with T802.

> **Advisory T802.1 Surfaces.** The technical requirements for surfaces in T802 apply to circulation paths (T203.4.1), lift platforms (T302.5.1), ramps and bridgeplates (T303.5), wheelchair spaces (T402.2), and step treads (T504.2).

T802.2 Slip Resistant. Surfaces shall be slip resistant.

T802.3 Openings. Openings in surfaces shall not allow the passage of a sphere more than 16 mm (5/8 inch) diameter. Elongated openings shall be placed so that the long dimension is perpendicular to dominant direction of travel. Lift platforms that are folded and stowed manually, and ramps and bridgeplates that are deployed manually shall be permitted to have a cut-out in the surface 38 mm (1½ inches) maximum by 115 mm (4½ inches) maximum for the operator to grasp the surface.

T802.4 Protrusions. Protrusions on surfaces shall be permitted to be 6.4 mm (¼ inch) high maximum.

T802.5 Surface Discontinuities. Surface discontinuities shall be 6.4 mm (¼ inch) high maximum without edge treatment and 13 mm (½ inch) high maximum with beveled edge treatment. The bevel shall have a slope not steeper than 1:2 (50 percent) applied across the entire surface discontinuity.

> **Advisory T802.5 Surface Discontinuities.** Two adjacent surfaces can have discontinuities up to 13 mm (½ inch). If the surface discontinuity is over 6.4 mm (¼ inch), a bevel with a maximum slope of 1:2 (50 percent) is required, and the bevel must blend the entire surface discontinuity with no lip.

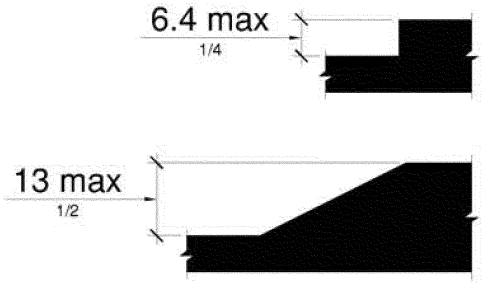

Figure T802.5
Surface Discontinuities

T803 Doorway Lighting. Lighting at doorways shall comply with Table T803. Lighting shall not shine directly in the eyes of passengers when entering and exiting doorways.

Table T803 Areas Illuminated and Illuminance Levels

Vehicles	Areas Illuminated	Illuminance Levels
Buses Over-the-Road Buses Vans	Lift platforms	When lift is raised or lowered between the vehicle floor and the boarding and alighting area or roadway, 55 lux (5 foot-candles) illuminance on all portions of the lift platform surface throughout the lift cycle When lift is at the boarding and alighting area or roadway level, 11 lux (1 foot-candle) of illuminance on the surface of the threshold ramp
Buses Over-the-Road Buses Vans	Ramps Bridgeplates	When ramp or bridgeplate is deployed to the boarding or alighting area or roadway, 22 lux (2 foot-candles) of illuminance on all portions of the ramp or bridgeplate surface
Buses Over-the-Road Buses Vans	Steps at doorways adjacent to the driver	When doors are open, 22 lux (2 foot-candles) of illuminance on step tread surfaces
Buses Over-the-Road Buses Vans	Steps at doorways not adjacent to the driver	At all times, 22 lux (2 foot-candles) of illuminance on step tread surfaces
Buses Over-the-Road Buses Vans	Boarding and alighting areas adjacent to doorways	When doors are open, 11 lux (1 foot-candle) of illuminance measured at points on boarding and alighting area surfaces 915 mm (36 inches) perpendicular from the outer edge of the bottom step tread or the doorway threshold

T804 Additional Requirements for Handrails, Stanchions, and Handholds

T804.1 General. Handrails, stanchions, and handholds shall comply with T804.

T804.2 Edges. Edges shall be rounded.

T804.3 Cross Section. Gripping surfaces shall have a cross section complying with T804.3.1 or T804.3.2.

T804.3.1 Circular Cross Section. Gripping surfaces with a circular cross section shall have an outside diameter of 32 mm (1¼ inches) minimum and 51 mm (2 inches) maximum.

T804.3.2 Non-Circular Cross Section. Gripping surfaces with a non-circular cross section shall have a perimeter dimension of 100 mm (4 inches) minimum and 160 mm (6¼ inches) maximum, and a cross section dimension of 57 mm (2¼ inches) maximum.

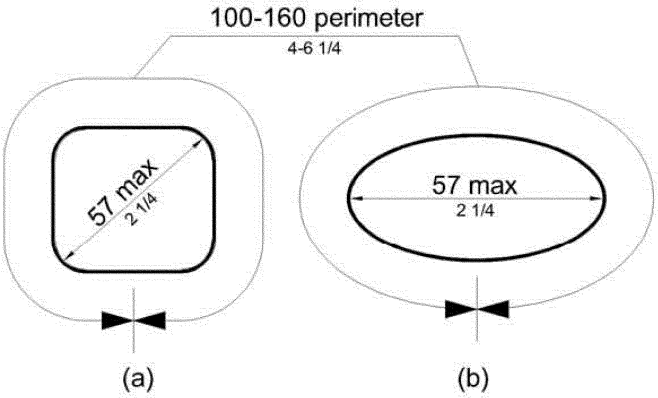

Figure T804.3.2
Non-Circular Cross Section

T804.4 Clearance. Clearance between gripping surfaces and adjacent surfaces shall be 38 mm (1½ inches) minimum.

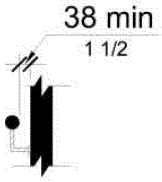

Figure T804.4
Clearance

T804.5 Structural Strength. Handrails on lift platform surfaces shall be capable of withstanding a force of 445 N (100 pounds) applied at any point on the handrail without permanent deformation of the handrail or supporting structure.

T805 Operable Parts

T805.1 General. Operable parts shall comply with T805.

T805.2 Height. Operable parts shall be located 610 mm (24 inches) minimum and 1220 mm (48 inches) maximum above the vehicle floor.

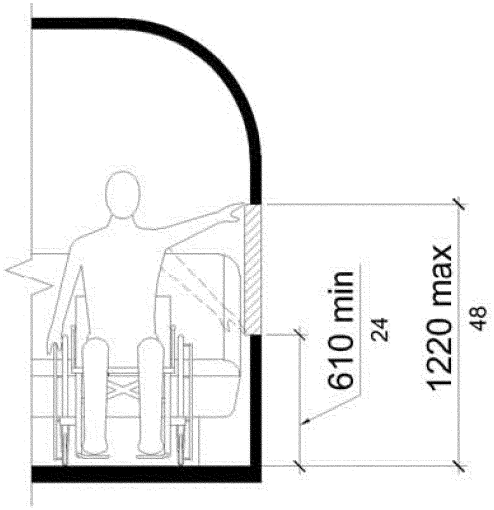

Figure T805.2
Height

T805.3 Operation. Operable parts shall be operable with one hand and shall not require tight grasp pinching, or twisting of the wrist. The force required to activate operable parts shall be 22.2 N (5 lb) maximum.

T806 Fare Collection Devices. Operable parts of fare collection devices shall comply with T805. operable parts shall be located so that a wheelchair can approach within 255 mm (10 inches) maxin

> **Advisory T806 Fare Collection Devices.** Fare collection devices that incorporate smart card technology are easier for passengers with disabilities to use.

[FR Doc. 2010–18255 Filed 7–23–10; 8:45 am]
BILLING CODE 8150–01–C